LG
Life's Good

OWNER'S MANUAL
LED LCD TV

Please read this manual carefully before operating your set and retain it for future reference.

LT38**
LT64**
LT66**
LT74**
LT76**

www.lg.com

ENGLISH

TABLE OF CONTENTS

3 LICENSES

3 OPEN SOURCE SOFTWARE NOTICE

4 INSTALLATION PROCEDURE

4 ASSEMBLING AND PREPARING

4 Unpacking
6 Separate purchase
7 Parts and buttons
8 Lifting and moving the TV
9 Setting up the TV
9 - Attaching the stand
11 - Mounting on a table
12 - Mounting on a wall
14 - Tidying cables
14 - How to use Dual Lock™

15 MAKING CONNECTIONS

15 Connection of TV
15 Antenna connection
16 HDMI connection
16 Component connection
17 DVI to HDMI connection
17 RGB-PC connection
17 RS-232C Setup
18 Network Setup
18 - Wired Network Connection
18 Audio connection
18 - Digital optical audio connection
19 Speaker output SETUP
19 Headphone connection
19 USB connection
20 CI module connection
20 Euro Scart connection

21 REMOTE CONTROL

24 MAINTENANCE

24 Cleaning your TV
24 - Screen, frame, cabinet and stand
24 - Power cord

24 TROUBLESHOOTING

25 CAUTION FOR USING EZSIGN 2.0

26 SPECIFICATIONS

31 IR CODES

32 EXTERNAL CONTROL DEVICE SETUP

32 RS-232C Setup
32 Type of connector; D-Sub 9-Pin Male
32 RS-232C Configurations
33 Communication Parameters
33 Command reference list
34 Transmission / Receiving Protocol

WARNING

- If you ignore the warning message, you may be seriously injured or there is a possibility of accident or death.

CAUTION

- If you ignore the caution message, you may be slightly injured or the product may be damaged.

NOTE

- The note helps you understand and use the product safely. Please read the note carefully before using the product.

LICENSES



Supported licenses may differ by model. For more information about licenses, visit *www.lg.com.*

Manufactured under license from Dolby Laboratories. “Dolby” and the double-D symbol are trademarks of Dolby Laboratories.

HDMI, the HDMI logo and High-Definition Multimedia Interface are trademarks or registered trademarks of HDMI Licensing LLC.

ABOUT DIVX VIDEO: DivX® is a digital video format created by DivX, LLC, a subsidiary of Rovi Corporation. This is an official DivX Certified® device that plays DivX video. Visit divx.com for more information and software tools to convert your files into DivX video.

ABOUT DIVX VIDEO-ON-DEMAND: This DivX Certified® device must be registered in order to play purchased DivX Video-on-Demand (VOD) movies. To obtain your registration code, locate the DivX VOD section in your device setup menu. Go to vod.divx.com for more information on how to complete your registration.

“DivX Certified® to play DivX® video up to HD 1080p, including premium content.”

“DivX®, DivX Certified® and associated logos are trademarks of Rovi Corporation or its subsidiaries and are used under license.”

Covered by one or more of the following U.S. patents :
7,295,673; 7,460,668; 7,515,710; 7,519,274

OPEN SOURCE SOFTWARE NOTICE

To obtain the source code under GPL, LGPL, MPL and other open source licenses, that is contained in this product, please visit *http://opensource.lge.com*.
In addition to the source code, all referred license terms, warranty disclaimers and copyright notices are available for download.
LG Electronics will also provide open source code to you on CD-ROM for a charge covering the cost of performing such distribution (such as the cost of media, shipping and handling) upon email request to opensource@lge.com. This offer is valid for three (3) years from the date on which you purchased the product.

NOTE

- Image shown may differ from your TV.
- Your TV's OSD (On Screen Display) may differ slightly from that shown in this manual.
- The available menus and options may differ from the input source or product model that you are using.
- New features may be added to this TV in the future.
- The TV can be placed in standby mode in order to reduce the power consumption. And the TV should be turned off if it will not be watched for some time, as this will reduce energy consumption.
- The energy consumed during use can be significantly reduced if the level of brightness of the picture is reduced, and this will reduce the overall running cost.

INSTALLATION PROCEDURE

1 Open the package and make sure all the accessories are included.
2 Attach the stand to the TV set.
3 Connect an external device to the TV set.
4 Make sure the network connection is available.
You can use the TV network functions only when the network connection is made. (Only LT74**, LT76**)

ASSEMBLING AND PREPARING

Unpacking

Check your product box for the following items. If there are any missing accessories, contact the local dealer where you purchased your product. The illustrations in this manual may differ from the actual product and item.

CAUTION

- Do not use any unapproved items to ensure the safety and product life span.
- Any damages or injuries by using unapproved items are not covered by the manufacturer's warranty.
- Some models have a thin film attached on to the screen and this must not be removed.

NOTE

- The items supplied with your product may vary depending on the model.
- Product specifications or contents of this manual may be changed without prior notice due to upgrade of product functions.
- For an optimal connection, HDMI cables and USB devices should have bezels less than 10 mm thick and 18 mm width. Use an extension cable that supports USB 2.0 if the USB cable or USB memory stick does not fit into your TV's USB port.

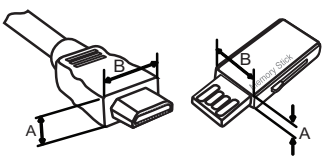

*A ≦ 10 mm
*B ≦ 18 mm

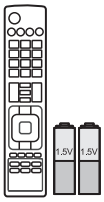

Remote control,
Batteries (AAA)
(See p.21, 22, 23)



Owner's manual



EzSign 2.0 Editor CD
(Only
22/26/32/37/42/47LT640E)



Power Cord Holder
(Only 32/37/42/47LT64**,
32/37/42/47LT66**,
32/37/42/47LT38**
32/37/42/47LT74**,
32/37/42/47LT76 **)
(See p.14)

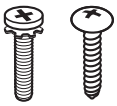

Stand Screws
4 EA, M4 x 12
2 EA, M4 x 16
(Only 22LT64**, 22LT38**)
(See p.9)



Stand Screws
8 EA, M4 x 12
(Only 26LT64**, 26LT66**,
26LT38**)
(See p.9)



Stand Screws
8 EA, M4 x 14
(Only 32/37/42/47LT64**,
32/37/42/47LT66**,
32/37/42/47LT38**
32/37/42/47LT74**
32/37/42/47LT76**)
(See p.10)



Desk-mount Screw
1 EA
(Only 32/37/42/47LT64**,
32/37/42/47LT66**,
32/37/42/47LT38**,
32/37/42/47LT74**,
32/37/42/47LT76**)
(See p.11)



Wall mount Screws
4 EA, M6 x 51
(Only 47LT****)

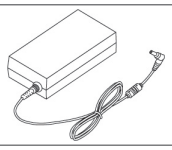

DC Adapter
(Only 22/26LT64**,
26LT66**, 22/26LT38**)
(See p.15)

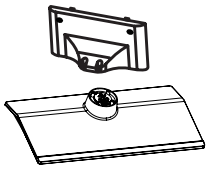

Stand body / Stand base
(Only 22LT64**, 22LT38**)
(See p.9)

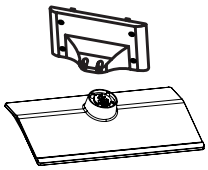

Stand body / Stand base
(Only 26LT64**, 26LT66**,
26LT38**)
(See p.9)

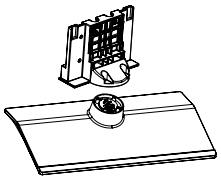

Stand body / Stand base
(Only 32/37/42/47LT64**,
32/37/42/47LT66**,
32/37/42/47LT38**,
32/37/42/47LT74**,
32/37/42/47LT76**)
(See p.10)

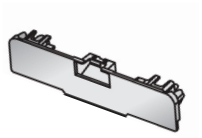

Protection cover
(Only 32/37/42/47LT64**,
32/37/42/47LT66**,
32/37/42/47LT38**,
32/37/42/47LT74**,
32/37/42/47LT76**)
(See p.13)

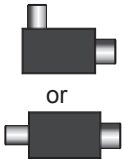

Isolator
(Depending on model)
(See p.6)

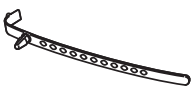

Cable Holder
(Depending on model)
(See p.14)

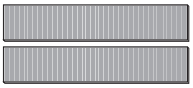

Dual Lock™
(Only LT64**, LT66**,
LT74**, LT76**)
(See p.14)



Power cord
(Depending on model)

Separate purchase

Separate purchase items can be changed or modified for quality improvement without any notification.
Contact your dealer to buy these items.
These devices only work with certain models.



AN-WF100
Wireless Dongle

Compatibility	LT640E	LT640H, LT380H, LT660H, LT740H, LT760H
AN-WF100 Wireless Dongle	•	

NOTE

- Antenna Isolator Installation Guide
  - Use this to install TV in a place where there is a voltage difference between TV Set and GND of antenna signal.
    - » If there is a voltage difference between TV Set and GND of antenna signal, the antenna contact might be heated and excessive heat might cause an accident.
  - You can improve the safety when watching TV by efficiently removing power voltage from TV antenna. It is recommended to mount the isolator to the wall. If it cannot be mounted to the wall, mount it on the TV. Avoid disconnecting the antenna Isolator after installation.
  - Before starting, be sure that the TV antenna is connected.

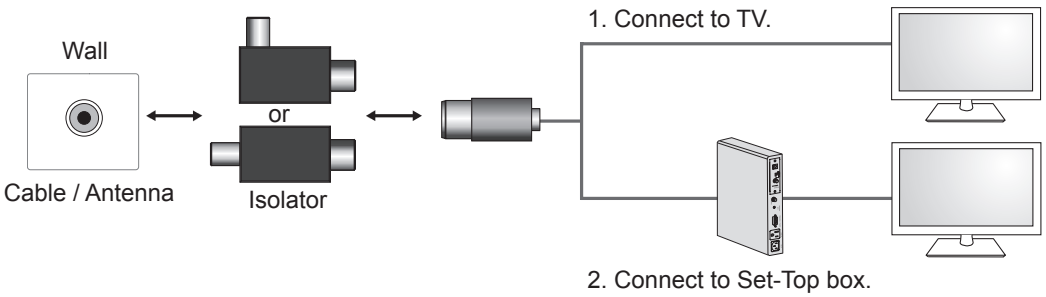

Connect one end of the isolator to cable/antenna jack and the other to TV set or set-top box.

“Equipment connected to the protective earthing of the building installation through the mains connection or through other equipment with a connection to protective earthing - and to a cable distribution system using coaxial cable, may in some circumstances create a fire hazard. Connection to a cable distribution system has therefore to be provided through a device providing electrical isolation below a certain frequency range (galvanic isolator, see EN 60728-11)”

When applying the RF Isolator, a slight loss of signal sensitivity can occur.

Parts and buttons

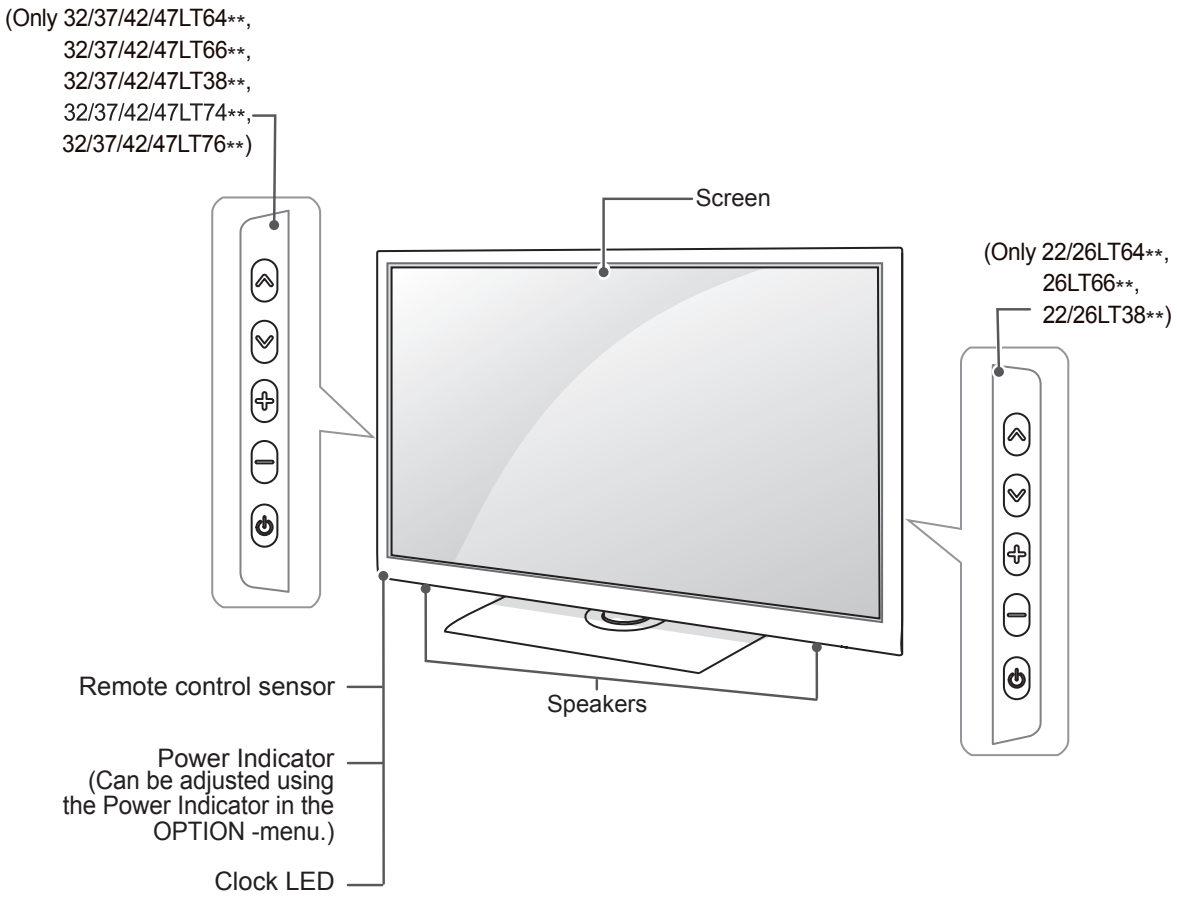

Button	Description
∨ ∧	Scrolls through the saved programmes.
+ −	Adjusts the volume level.
⏻	Turns the power on or off.

Lifting and moving the TV

When moving or lifting the TV, read the following to prevent the TV from being scratched or damaged and for safe transportation regardless of its type and size.

CAUTION

- Avoid touching the screen at all times, as this may result in damage to the screen.

- It is recommended to move the TV in the box or packing material that the TV originally came in.
- Before moving or lifting the TV, disconnect the power cord and all cables.
- When holding the TV, the screen should face away from you to avoid damage.

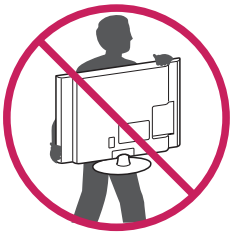

- Hold the top and bottom of the TV frame firmly. Make sure not to hold the transparent part, speaker, or speaker grill area.

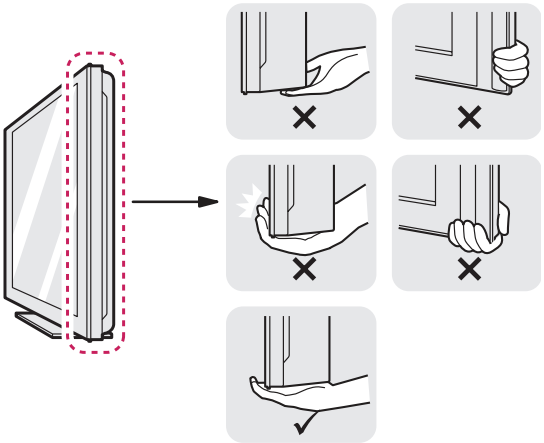

- When transporting a large TV, there should be at least 2 people.
- When transporting the TV by hand, hold the TV as shown in the following illustration.

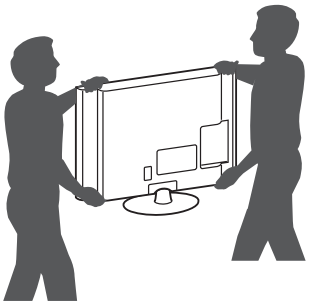

- When transporting the TV, do not expose the TV to jolts or excessive vibration.
- When transporting the TV, keep the TV upright, never turn the TV on its side or tilt towards the left or right.

Setting up the TV

Put your TV on a pedestal stand and mount the TV on a table or wall.

Attaching the stand

(Only 22/26LT64**, 26LT66**, 22/26LT38**)

1

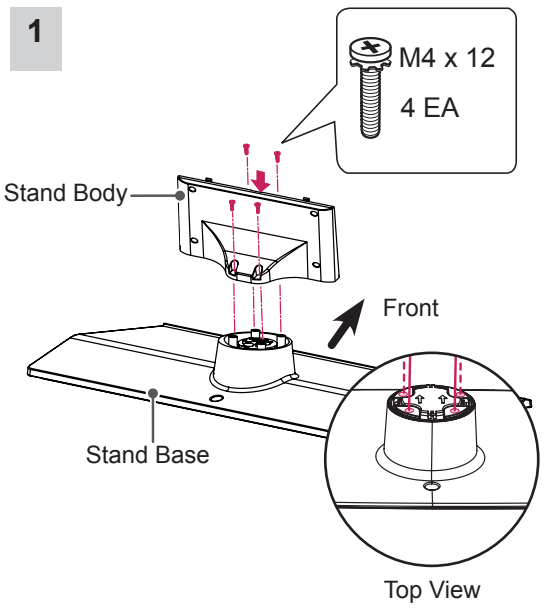

2

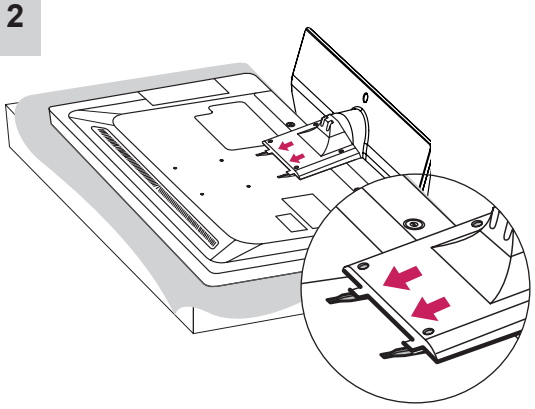

3

(Only 22LT64**, 22LT38**)

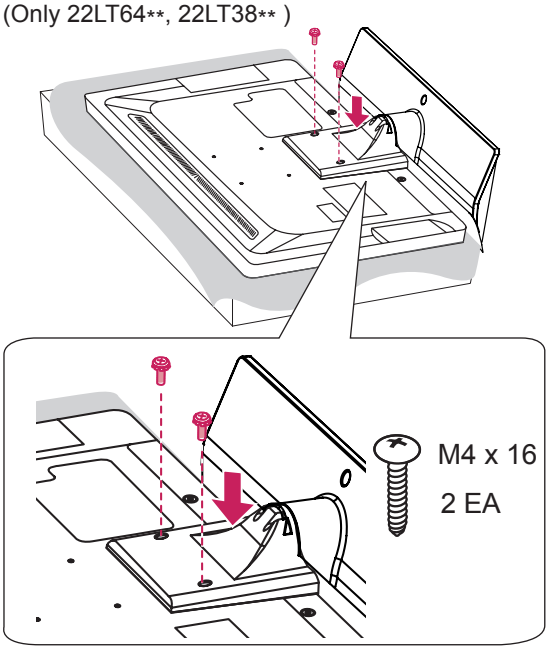

(Only 26LT64**, 26LT66**, 26LT38**)

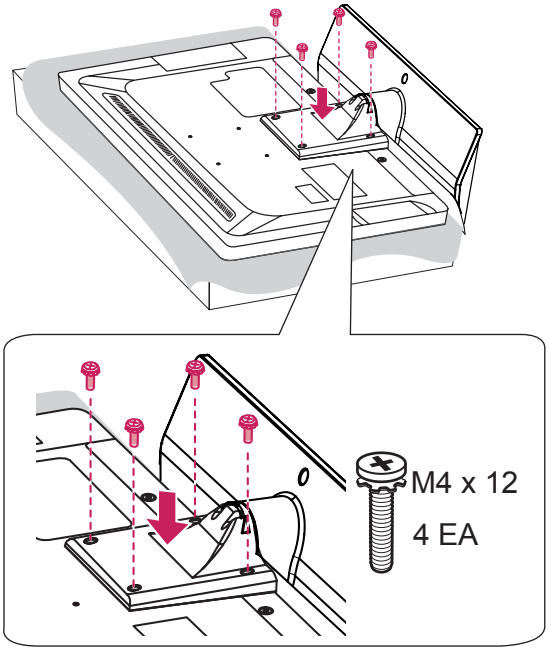

(Only 32/37/42/47LT64**, 32/37/42/47LT66**, 32/37/42/47LT38**, 32/37/42/47LT74**, 32/37/42/47LT76**)

1

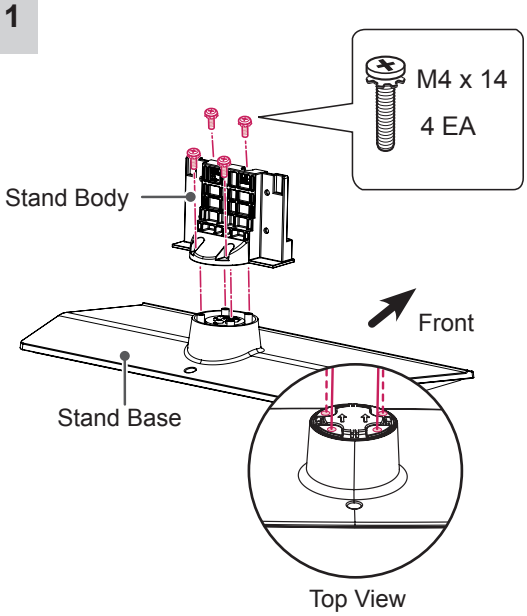

2

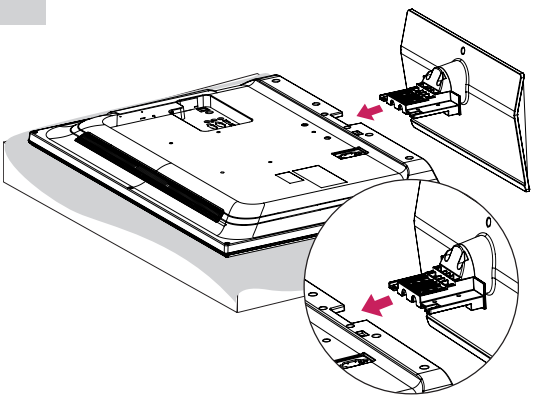

3

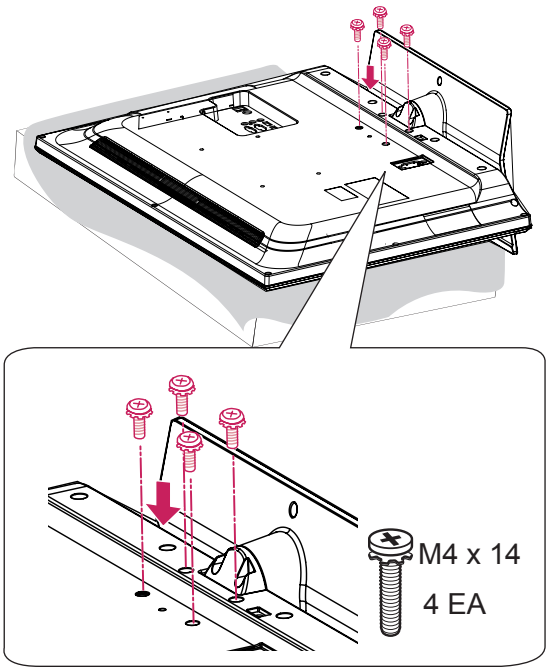

CAUTION

- When attaching the stand to the TV set, place the screen facing down on a cushioned table or flat surface to protect the screen from scratches.
- Make sure that the screws are fastened completely. (If they are not fastened securely enough, the TV may tilt forward after being installed.)
  Do not fasten the screws with too much force; otherwise they may be worn out and get loosened.

NOTE

- Remove the stand before installing the TV on a wall mount by performing the stand attachment in reverse.

Mounting on a table

1 Lift and tilt the TV into its upright position on a table.
- Leave a 10 cm (minimum) space from the wall for proper ventilation.

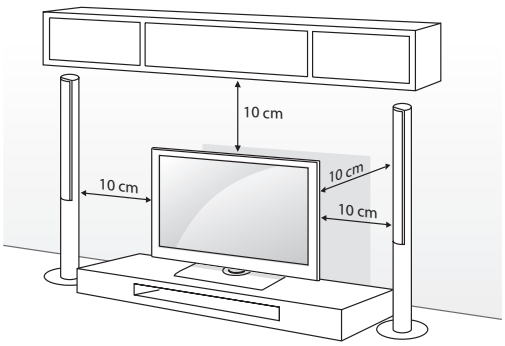

2 Connect the power cord to a wall outlet.

CAUTION

- Do not place the TV near or on sources of heat, as this may result in fire or other damage.

Attaching the TV to a table

Image shown may differ from your TV.
The TV must be attached to desk so it cannot be pulled in a forward/backward direction, potentially causing injury or damaging the pro duct.
(Only 32/37/42/47LT64**, 32/37/42/47LT66**, 32/37/42/47LT38**, 32/37/42/47LT74**, 32/37/42/47LT76**)

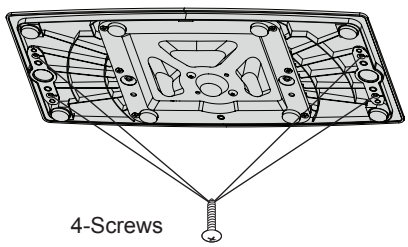

4-Screws
(not provided as parts of the product)

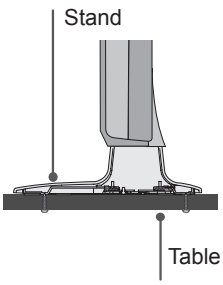

Screws: M5 x L (*L: Table depth + 8-10 mm)
ex) Table depth: 15 mm, Screw: M5 x 25

Securing the TV to a table

Fix the TV to a table to prevent from tilting forward, damage, and potential injury.
Mount the TV on a table, and then insert and tighten the supplied screw on the rear of the stand.
(Only 32/37/42/47LT64**, 32/37/42/47LT66**, 32/37/42/47LT38**, 32/37/42/47LT74**, 32/37/42/47LT76**)

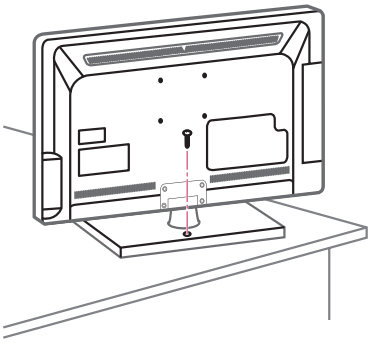

WARNING

- To prevent TV from falling over, the TV should be securely attached to the floor/ wall per installation instructions. Tipping, shaking, or rocking the TV may cause injury.

Adjusting the angle of the TV to suit view

Swivel 90 degrees to the left or right and adjust the angle of the TV to suit your view.

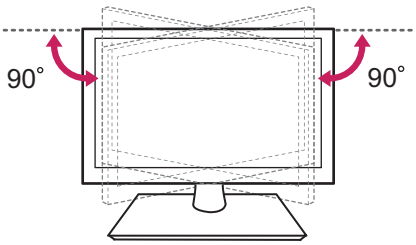

CAUTION

- When adjusting the angle of the product, watch out for your fingers.
  - » Personal injury may occur if hands or fingers are pinched. If the product is tilted too much, it may fall, causing damage or injury.

Securing the TV to a wall

(This feature is not available for all models.)

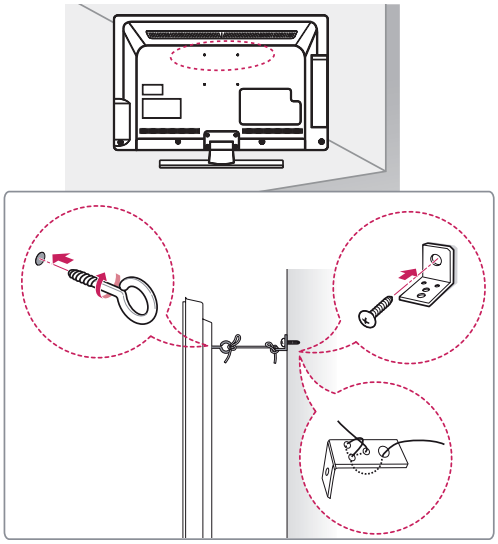

1 Insert and tighten the eye-bolts, or TV brackets and bolts on the back of the TV.
   - If there are bolts inserted at the eye-bolts position, remove the bolts first.
2 Mount the wall brackets with the bolts to the wall.
   Match the location of the wall bracket and the eye-bolts on the rear of the TV.
3 Connect the eye-bolts and wall brackets tightly with a sturdy rope.
   Make sure to keep the rope horizontal with the flat surface.

CAUTION

- Make sure that children do not climb on or hang on the TV.

NOTE

- Use a platform or cabinet that is strong and large enough to support the TV securely.
- Brackets, bolts and ropes are not provided. You can obtain additional accessories from your local dealer.

Mounting on a wall

Attach an optional wall mount bracket at the rear of the TV carefully and install the wall mount bracket on a solid wall perpendicular to the floor. When you attach the TV to other building materials, please contact qualified personnel.

LG recommends that wall mounting be performed by a qualified professional installer.

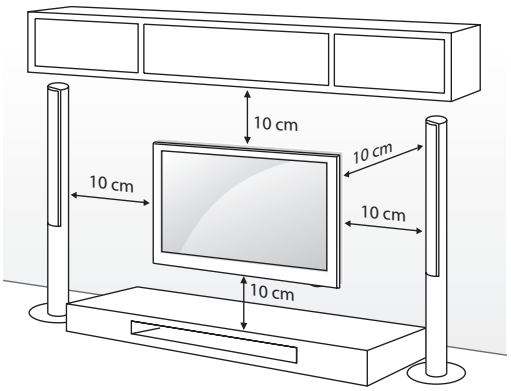

Make sure to use screws and wall mount bracket that meet the VESA standard. Standard dimensions for the wall mount kits are described in the following table.

Separate purchase (Wall Mounting Bracket)

Model	22/26LT64**, 22/26LT38**, 26LT66**	32LT64**, 32LT66**, 32LT38**, 32LT74**, 32LT76**
VESA	100 x 100	200 x 100
Standard screw	M4	M4
Number of screws	4	4
Wall mount bracket	LSW100B(G) 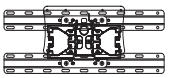	
Model	37/42LT64**, 37/42LT66**, 37/42LT38**, 37/42LT74**, 37/42LT76**	
VESA	200 x 200	
Standard screw	M6	
Number of screws	4	
Wall mount bracket	LSW200B(G) 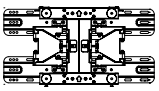	LSW220BX 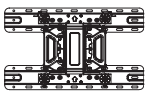
Model	47LT64**, 47LT66**, 47LT38**, 47LT74**, 47LT76**	
VESA	400 x 400	
Standard screw	M6	
Number of screws	4	
Wall mount bracket	LSW420BX 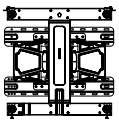	

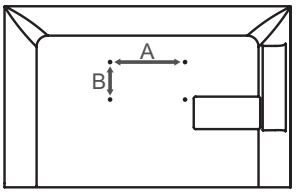

CAUTION

- Disconnect the power first, and then move or install the TV. Otherwise electric shock may occur.
- If you install the TV on a ceiling or slanted wall, it may fall and result in severe injury. Use an authorized LG wall mount bracket and contact the local dealer or qualified personnel.
- Do not over tighten the screws as this may cause damage to the TV and void your warranty.
- Use the screws and wall mount bracket that meet the VESA standard. Any damages or injuries by misuse or using an improper accessory are not covered by the warranty.
- On the 47LT**** models, use M6 x 51 screws.

NOTE

- Use the screws that are listed on the VESA standard screw specifications.
- The wall mount kit includes an installation manual and necessary parts.
- The wall mount bracket is not provided. You can obtain additional accessories from your local dealer.
- The length of screws may differ depending on the wall mount. Make sure to use the proper length.
- For more information, refer to the manual supplied with the wall mount.

Not using the DESK-TYPE STAND

(Only 32/37/42/47LT64**, 32/37/42/47LT66**, 32/37/42/47LT38**, 32/37/42/47LT74**, 32/37/42/47LT76**)

Image shown may differ from your TV.
When installing the wall mounting bracket, use the Protection cover.
Insert the **Protection cover** into the TV until clicking sound.

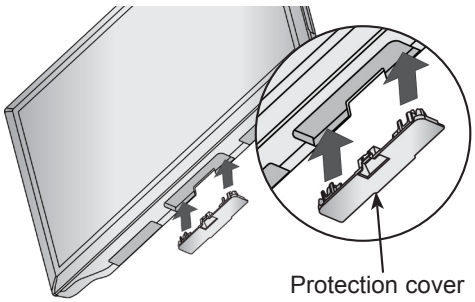

Tidying cables

(Only 32/37/42/47LT64**, 32/37/42/47LT66**, 32/37/42/47LT38**, 32/37/42/47LT74**, 32/37/42/47LT76**)

1 Install the Power Cord Holder and Power Cord. It will help prevent the power cable from being removed by accident.

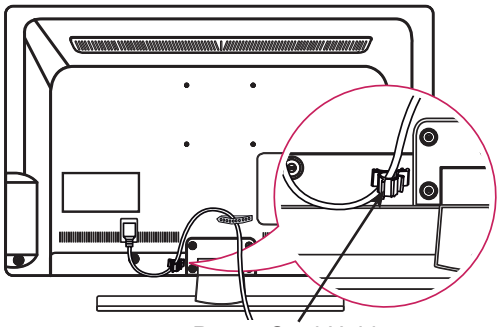

2 Gather and bind the cables with the Cable Holder.

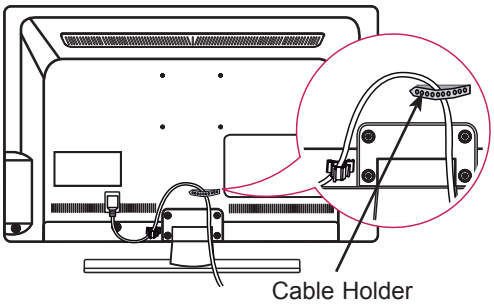

(Only 22/26LT64**, 26LT66**, 22/26LT38**)

1 Gather and bind the cables with the Cable Holder.

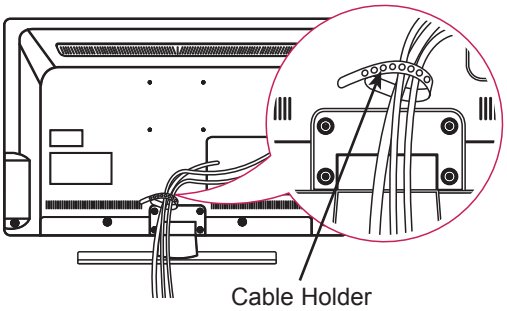

CAUTION

- Do not move the TV by holding the Cable Holder and Power Cord Holder, as the Cable holders may break, and injuries and damage to the TV may occur.

How to use Dual Lock™

(This feature is not available for all models.)

Fix the set-top box to the TV and use it when you want to.

1 After removing the protection paper from the Dual Lock, stick it to the TV and the set-top box as shown.

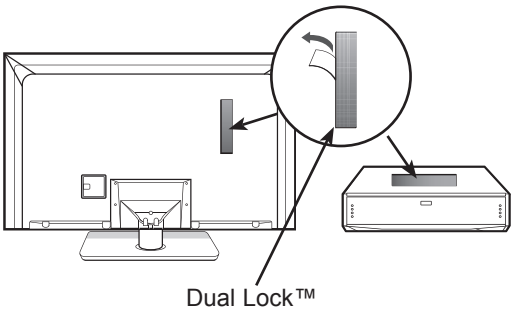

2 Attach the set-top box to the TV by pressing the Velcro strips together.

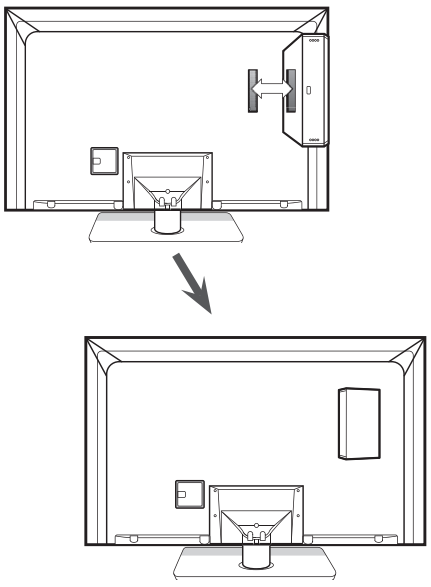

NOTE

- Please make sure no foreign substances exist on the surface of the product, and then firmly attach the Dual Lock.
- Before attaching the set-top box to the TV set, let the attached Dual Lock dry for at least three days.

MAKING CONNECTIONS

This section on **MAKING CONNECTIONS** mainly uses diagrams for the 32LT66** models.
Connect various external devices to the TV and switch input modes to select an external device. For more information on external device's connection, refer to the manual provided with each device.
Available external devices are: HD receivers, DVD players, VCRs, audio systems, USB storage devices, PC, gaming devices, and other external devices.

NOTE

- The external device connection may differ from the model.
- Connect external devices to the TV regardless of the order of the TV port.
- If you record a TV program on a DVD recorder or VCR, make sure to connect the TV signal input cable to the TV through a DVD recorder or VCR. For more information on recording, refer to the manual provided with the connected device.
- Refer to the external equipment's manual for operating instructions.
- If you connect a gaming device to the TV, use the cable supplied with the gaming device.
- In PC mode, there may be noise associated with the resolution, vertical pattern, contrast or brightness. If noise is present, change the PC output to another resolution, change the refresh rate to another rate or adjust the brightness and contrast on the PICTURE menu until the picture is clear.
- In PC mode, some resolution settings may not work properly depending on the graphics card.

Connection of TV

(Only 22/26LT64**, 26LT66**, 22/26LT38**)

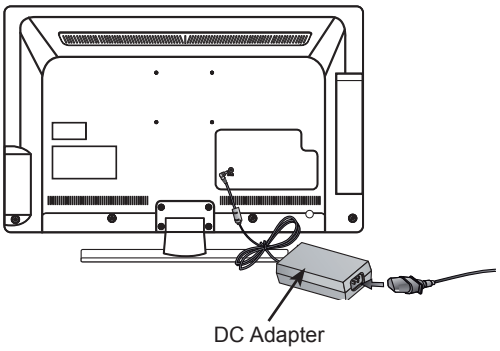

1. Connect the antenna cable to the antenna input port on the TV.
2. Connect the DC adapter plug to the power input jack on the TV.
3. Connect the power cord to the DC adapter first, then plug the power cord into the wall power outlet.

Antenna connection

Connect the TV to a wall antenna socket with an RF cable (75 Ω).

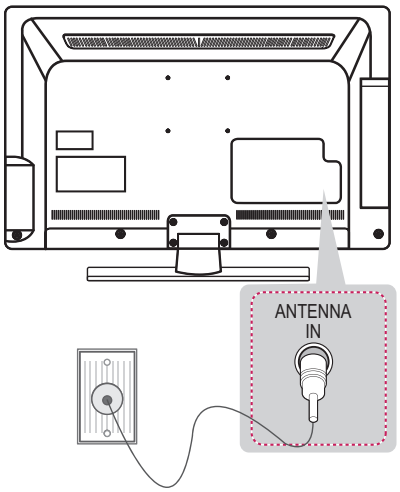

NOTE

- Use a signal splitter to use more than 2 TVs.
- If the image quality is poor, install a signal amplifier properly to improve the image quality.
- If the image quality is poor with an antenna connected, try to realign the antenna in the correct direction.
- An antenna cable and converter are not supplied.

HDMI connection

Transmits the digital video and audio signals from your PC to the TV. Connect the PC and the TV with the HDMI cable as shown in the following illustrations. Choose any HDMI input port to connect. It does not matter which port you use.

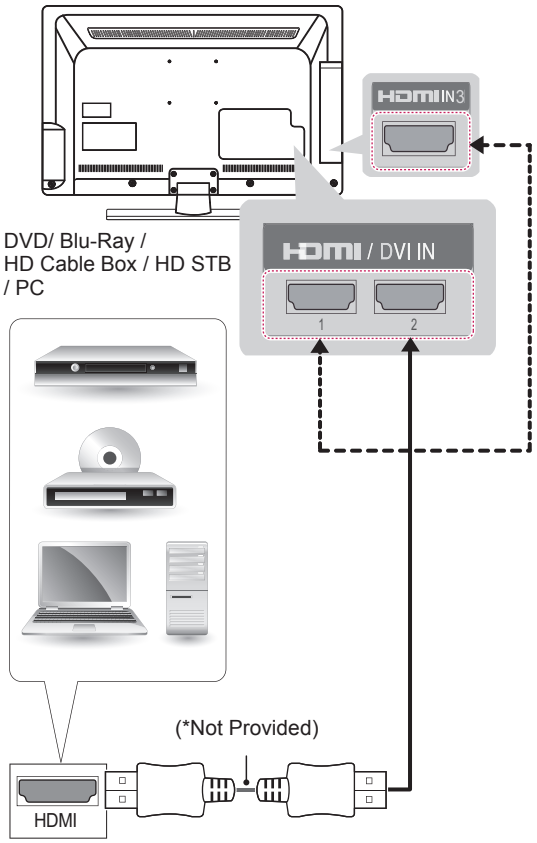

NOTE

- It is recommended to use the TV with the HDMI connection for the best image quality.
- Use the latest High Speed HDMI™ Cable with CEC (Customer Electronics Control) function.
- High Speed HDMI™ Cables are tested to carry an HD signal up to 1080p and higher.
- Supported DTV Audio: MPEG, Dolby Digital, Dolby Digital Plus, HE-AAC
- Supported HDMI Audio format : Dolby Digital, PCM (Up to 192 KHz, 32k/44.1k/48k /88k/96k/176k/192k, DTS Not supported.)

(Only 32/37/42/47LT76**)

ARC (Audio Return Channel)

- An external audio device that support SIMPLINK and ARC must be connected using HDMI/DVI IN 1 (ARC) port.
- When connected with a high-speed HDMI cable, the external audio device that supports ARC outputs optical SPDIF without additional optical audio cable and supports the SIMPLINK function.

Component connection

(Only LT64**, LT66**, LT38**, LT74**)
Transmits the analogue video and audio signals from an external device to the TV. Connect the external device and the -TV with the component cable as shown in the following illustrations.

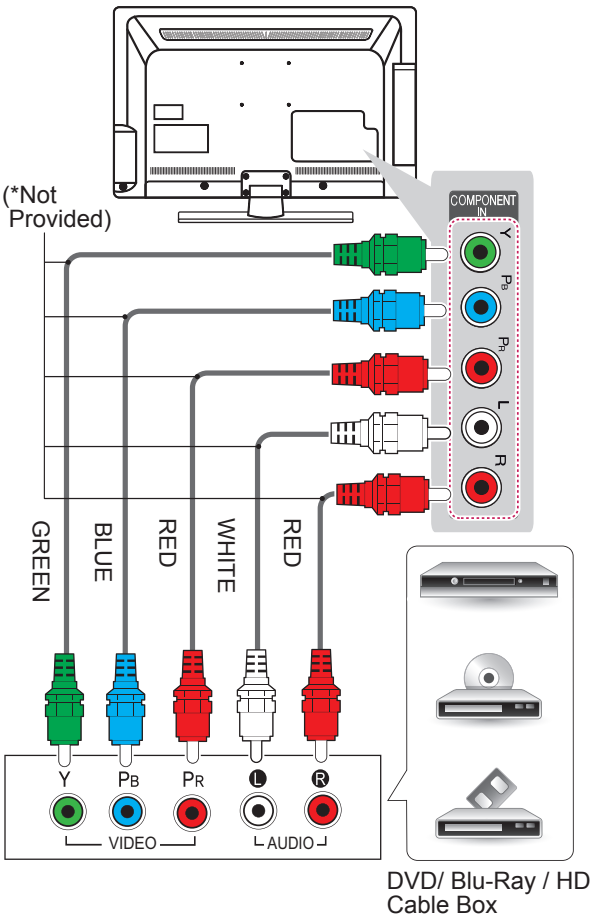

NOTE

- If cables are not installed correctly, it could cause this image to display in black and white or with distorted colours.

DVI to HDMI connection

Transmits the digital video signal from an external device to the TV. Connect the external device and the TV with the DVI-HDMI cable as shown in the following illustrations. To transmit an audio signal, connect an audio cable. Choose any HDMI input port to connect. It does not matter which port you use.

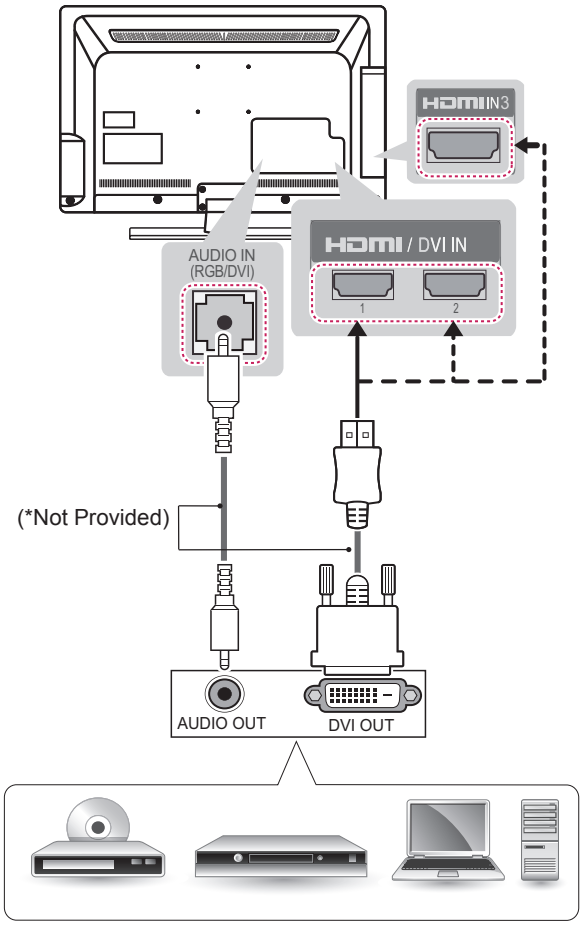

DVD/ Blu-Ray / HD Cable Box / PC

NOTE

- Depending on the graphics card, DOS mode may not work if a HDMI to DVI Cable is in use.

RGB-PC connection

Transmits the video signal from PC to the TV. To transmit an audio signal, connect an audio cable.

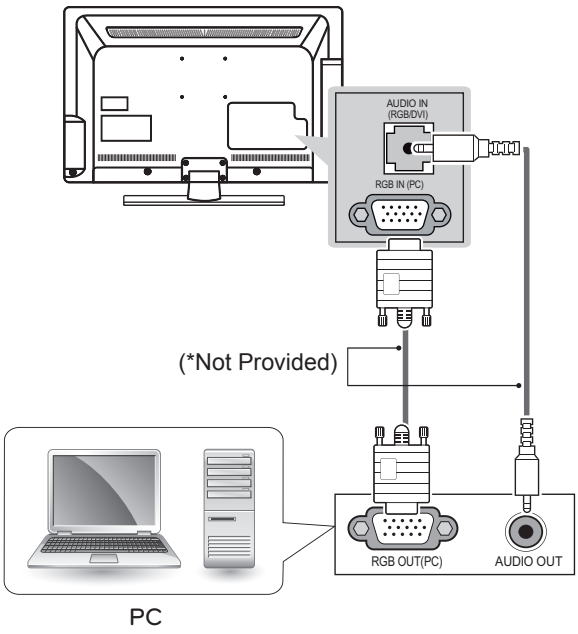

PC

RS-232C Setup

Connect the RS-232C (serial port) input jack to an external control device (such as a computer or an A/V control system) to control the product's functions externally.
Connect the serial port of the control device to the RS-232C jack on the product back panel.
Note: RS-232C connection cables are not supplied with the product.

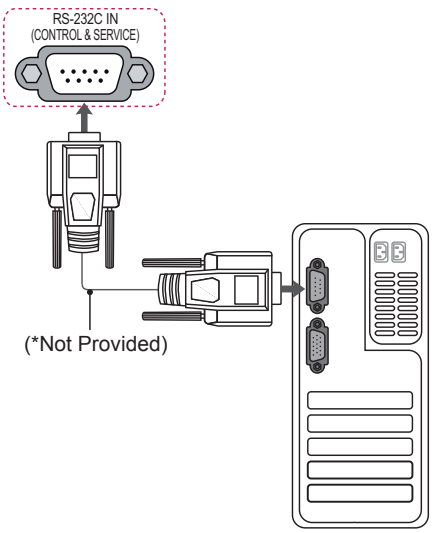

Network Setup

(Only 32/37/42/47LT74**, 32/37/42/47LT76**)

Wired Network Connection

This TV can be connected to a local area network (LAN) via the LAN port. After making the physical connection, the TV needs to be set up for network communication.
(Image shown may differ from your TV.)

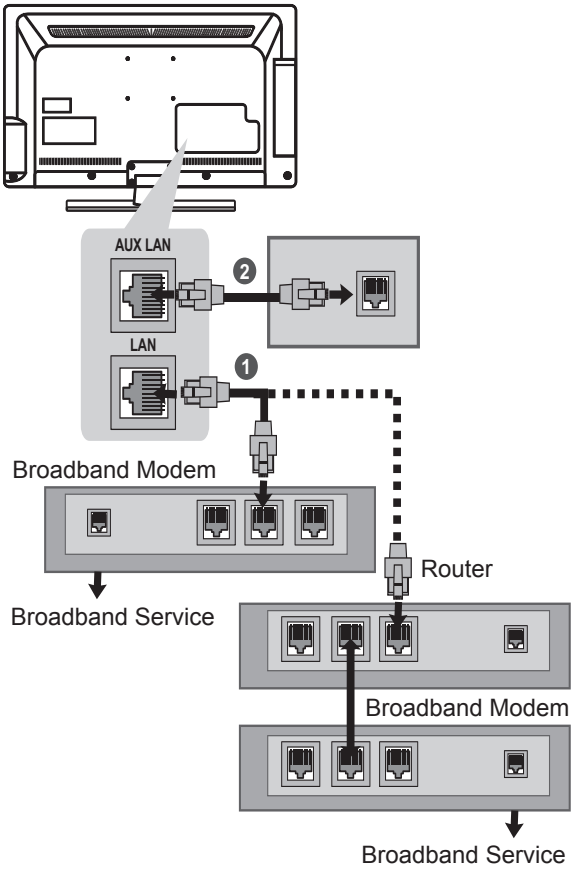

❶ Connect the LAN port of the Modem or Router to the LAN port on the TV.
❷ Connect the LAN port of the PC to the AUX LAN port on the TV.

CAUTION

- Do not connect a modular phone cable to the LAN port.
- Since there are various connection methods, please follow the specifications of your telecommunication carrier or internet service provider.

Audio connection

(Only 32/37/42/47LT64**, 32/37/42/47LT66**, 32/37/42/47LT38**, 32/37/42/47LT74**, 32/37/42/47LT76**)
You may use an optional external audio system instead of the built-in speaker.

NOTE

- If you use an optional external audio device instead of the built-in speaker, set the TV speaker feature to off.

Digital optical audio connection

Transmits the digital audio signal from the TV to an external device. Connect the external device and the TV with the optical audio cable as shown in the following illustrations.

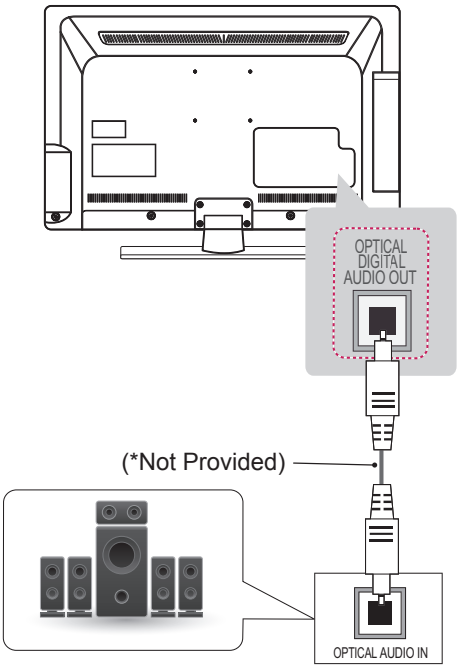

Digital Audio System

NOTE

- Do not look into the optical output port. Looking at the laser beam may damage your vision.
- Audio with ACP (Audio Copy Protection) function may block digital audio output.

Speaker output SETUP

Connect the external speaker to the Speaker output(STEREO) jack on the TV.

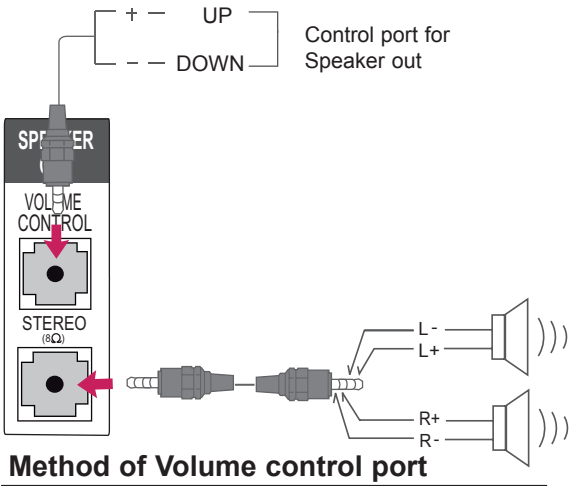

Method of Volume control port

Cable Spec.	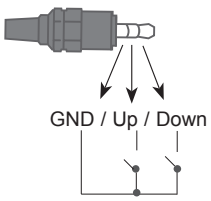 • Each Up/ Down pin is pulled to 3.3V with CPU GPIO. • CPU detects transition from 3.3V to GND level for volume control.

Headphone connection

(Only LT64**, LT66**, LT38**, LT74**)

Transmits the headphone signal from the TV to an external device. Connect the external device and the TV with the headphone as shown in the following illustrations.

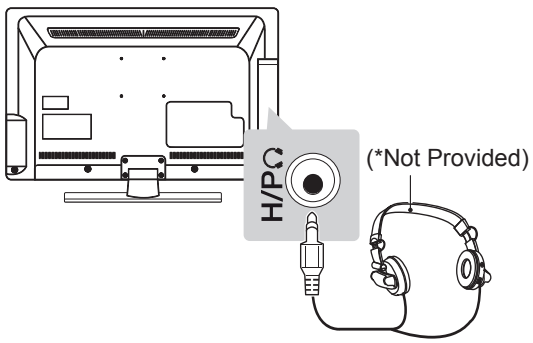

NOTE

- AUDIO menu items are disabled when connecting a headphone.
- When changing AV MODE with a headphone connected, the change is applied to video but not to audio.
- Optical Digital Audio Out is not available when connecting a headphone.
- Headphone impedance: 16 Ω
- Max audio output of headphone: 9 mW to 15 mW
- Headphone jack size: 0.35 cm

USB connection

Connect a USB storage device such as a USB flash memory, external hard drive, or a USB memory card reader to the TV.

(Only LT64**, LT66**, LT38**, LT74**)

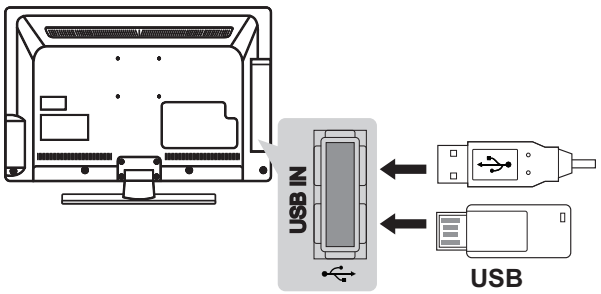

(Only LT76**)

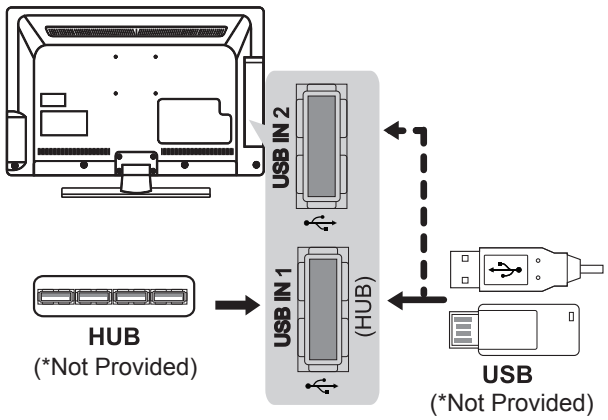

NOTE

- To use a USB Hub device, make sure that it is connected to the **USB IN 1 (HUB)** port.
- Some USB Hubs may not work. If a USB device connected using a USB Hub is not detected, connect it to the USB port on the TV directly.

CI module connection

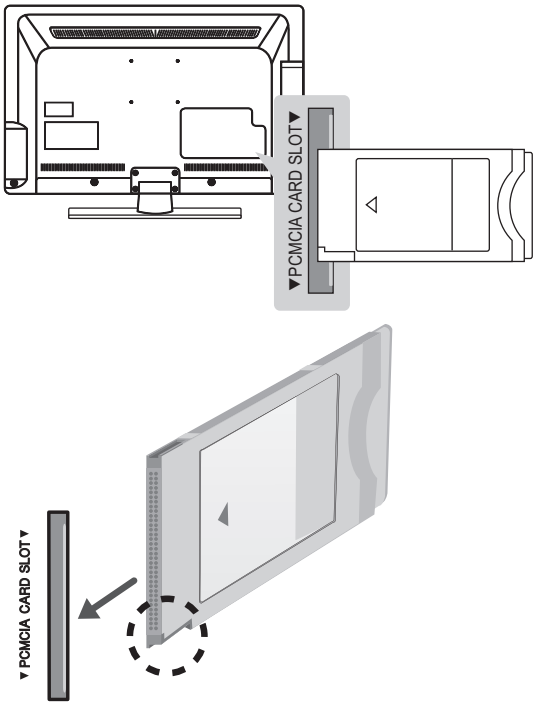

View the encrypted (pay) services in digital TV mode. This feature is not available in all countries.

NOTE

- Check if the CI module is inserted into the PCMCIA card slot in the right direction. If the module is not inserted properly, this can cause damage to the TV and the PCMCIA card slot.

Euro Scart connection

Transmits the video and audio signals from an external device to the TV set. Connect the external device and the TV set with the Euro Scart cable as shown on the following illustration. To display images by using progressive scan, make sure to use the Euro Scart cable.

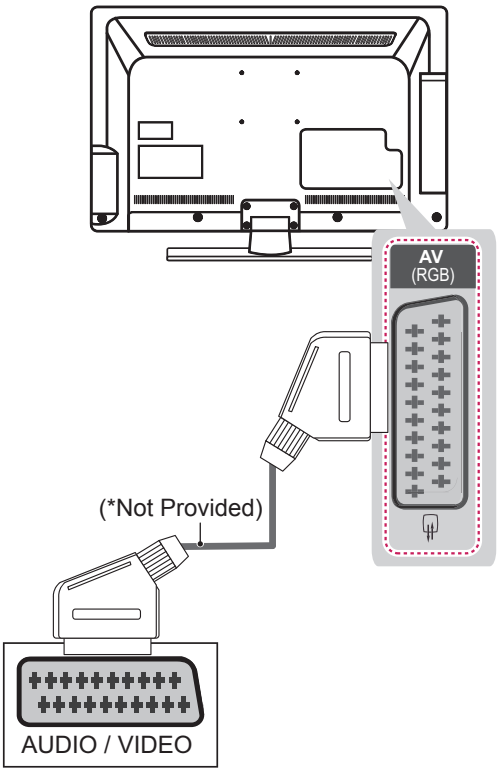

Current input model \ Output Type	AV (TV Out[1])
Digital TV	Digital TV
Analogue TV, AV	Analogue TV
Component / RGB	Analogue TV
HDMI	Analogue TV

1 TV Out : Outputs Analogue TV or Digital TV signals.

NOTE

- Any Euro scart cable used must be signal shielded.

ENGLISH

REMOTE CONTROL

The descriptions in this manual are based on the buttons on the remote control.
Please read this manual carefully and use the TV correctly.
To replace batteries, open the battery cover, replace batteries (1.5 V AAA) matching the ⊕ and ⊖ ends to the label inside the compartment, and close the battery cover.
To remove the batteries, perform the installation actions in reverse.

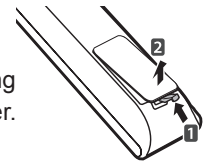

CAUTION

- Do not mix old and new batteries, as this may damage the remote control.

Make sure to point the remote control toward the remote control sensor on the TV.
(Only LT64**, LT66**, LT76**)

⏻
Turns the TV on or off.

ENERGY SAVING
Adjusts the brightness of the screen to reduce energy consumption.

AV MODE
Selects an AV mode.

INPUT
Changes the input source.

TV/RAD
Selects Radio, TV and DTV programme.

GUIDE
Shows programme guide. (Only LT640H, LT660H, LT760H)
Shows Contents List in EzSign mode. (Only LT640E)

PORTAL
Displays and removes hotel interactive menu.(Only LT640H, LT660H, LT760H)
Displays the EzSign content on a TV Screen. (Only LT640E)

INFO
Views the information of the current programme and screen.(Only LT640H, LT660H, LT760H)
Shows or hides the information on TV remote control buttons in EzSign mode. (Only LT640E)

Navigation buttons (up/down/left/right)
Scrolls through menus or options.

OK
Selects menus or options and confirms your input.

Home
Selects a menu.
Clears all on-screen displays and returns to TV viewing from any menu.

Returns to the previous level.

EXIT
Clears on-screen displays and return to TV viewing.

Q. MENU
Accesses the quick menus.

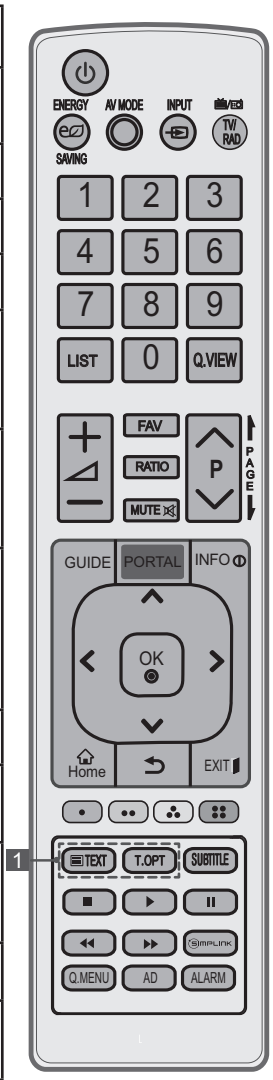

Number buttons
Enters numbers.

LIST
Accesses the saved programme list.

Q.VIEW
Returns to the previously viewed programme.

+ −
Adjusts the volume level.

FAV
Accesses your favourite programme list.

RATIO
Resizes an image.

MUTE
Mutes all sounds.

∨P∧
Scrolls through the saved programmes.

PAGE
Moves to the previous or next screen.

Colour buttons
These access special functions in some menus.
(●: Red, ●●: Green, ●●●: Yellow, ●●●●: Blue)

1 TELETEXT BUTTONS
These buttons are used for teletext.

SUBTITLE
Recalls your preferred subtitle in digital mode.

Control buttons (■, ▶, II, ◀◀, ▶▶)
Controls the MY MEDIA menus, or the SIMPLINK compatible devices (USB,SIMPLINK).(Only LT640H, LT660H, LT760H)
Not functional when EzSign contents is on. (Only LT640E)

SIMPLINK
Accesses the AV devices connected with the HDMI cable through HDMI-CEC.
Opens the SIMPLINK menu.

AD
Switches the Audio Description On or Off.

ALARM
Sets the alarm function.

(Only LT38**)

⏻ Turns the TV on or off.
ENERGY SAVING Adjusts the brightness of the screen to reduce energy consumption.
AV MODE Selects an AV mode.
INPUT Changes the input source.
TV/RAD Selects Radio, TV and DTV programme.
GUIDE Shows programme guide.
ALARM Sets the alarm function.
INFO Views the information of the current programme and screen.
Navigation buttons (up/down/left/right) Scrolls through menus or options.
OK Selects menus or options and confirms your input.
Home Selects a menu. Clears all on-screen displays and returns to TV viewing from any menu.
⮌ Returns to the previous level.
EXIT Clears on-screen displays and return to TV viewing.
Q. MENU Accesses the quick menus.
AD Switches the Audio Description On or Off.

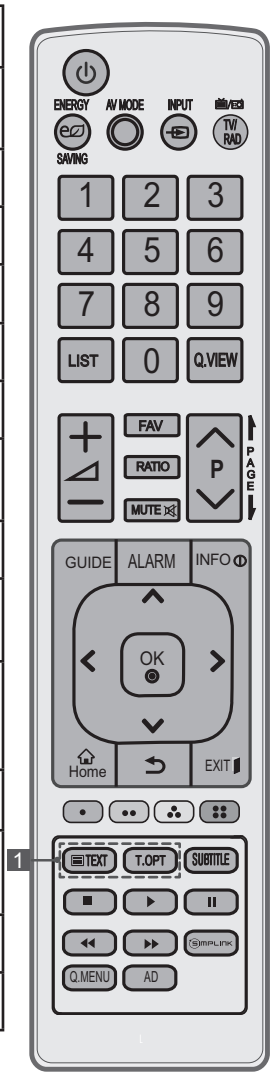

Number buttons Enters numbers.
LIST Accesses the saved programme list.
Q.VIEW Returns to the previously viewed programme.
+◿− Adjusts the volume level.
FAV Accesses your favourite programme list.
RATIO Resizes an image.
MUTE Mutes all sounds.
∨P∧ Scrolls through the saved programmes.
PAGE Moves to the previous or next screen.
Colour buttons These access special functions in some menus. (●: Red, ●●: Green, ●●●: Yellow, ●●●●: Blue)
1 TELETEXT BUTTONS These buttons are used for teletext.
SUBTITLE Recalls your preferred subtitle in digital mode.
Control buttons (■, ▶, ❚❚, ◀◀, ▶▶) Controls the MY MEDIA menus, or the SIMPLINK compatible devices (USB,SIMPLINK).
SIMPLINK Accesses the AV devices connected with the HDMI cable through HDMI-CEC. Opens the SIMPLINK menu.

ENGLISH

(Only LT74**)

⏻
Turns the TV on or off.

ENERGY SAVING
Adjusts the brightness of the screen to reduce energy consumption.

AV MODE
Selects an AV mode.

INPUT
Changes the input source.

TV/RAD
Selects Radio, TV and DTV programme.

GUIDE
Shows programme guide.

PORTAL
Displays and removes hotel interactive menu.

INFO
Views the information of the current programme and screen.

Navigation buttons (up/down/left/right)
Scrolls through menus or options.

OK
Selects menus or options and confirms your input.

Home
Selects a menu.
Clears all on-screen displays and returns to TV viewing from any menu.

BACK
Returns to the previous level.

EXIT
Clears on-screen displays and return to TV viewing.

AD
Switches the Audio Description On or Off.

1 TELETEXT BUTTONS
These buttons are used for teletext.

SIMPLINK
Accesses the AV devices connected with the HDMI cable through HDMI-CEC.
Opens the SIMPLINK menu.



Number buttons
Enters numbers.

LIST
Accesses the saved programme list.

Q.VIEW
Returns to the previously viewed programme.

+ −
Adjusts the volume level.

MARK
Select the input to apply the Picture Wizard settings.
Check and un-check programmes in the USB menu.

CHAR/NUM
Shifts the Character or Number.

RATIO
Resizes an image.

MUTE
Mutes all sounds.

DELETE
Deletes the entered character when entering the character on the screen keyboard.

P
Scrolls through the saved programmes.

PAGE
Moves to the previous or next screen.

Colour buttons
These access special functions in some menus.
(: Red, : Green, : Yellow, : Blue)

SUBTITLE
Recalls your preferred subtitle in digital mode.

Control buttons (■, ▶, II, ◀◀, ▶▶)
Controls the MY MEDIA menus, or the SIMPLINK compatible devices (USB,SIMPLINK).

Q. MENU
Accesses the quick menus.

ALARM
Sets the alarm function.

MAINTENANCE

Cleaning your TV

Clean your TV regularly to keep the best performance and to extend the product lifespan.

CAUTION

- Make sure to turn the power off and disconnect the power cord and all other cables first.
- When the TV is left unattended and unused for a long time, disconnect the power cord from the wall outlet to prevent possible damage from lightning or power surges.

Screen, frame, cabinet and stand

- To remove dust or light dirt, wipe the surface with a dry, clean, and soft cloth.
- To remove major dirt, wipe the surface with a soft cloth dampened in clean water or a diluted mild detergent. Then wipe immediately with a dry cloth.

CAUTION

- Avoid touching the screen at all times, as this may result in damage to the screen.
- Do not push, rub, or hit the screen surface with your fingernail or a sharp object, as this may result in scratches and image distortions.
- Do not use any chemicals as this may damage the product.
- Do not spray liquid onto the surface. If water enters the TV, it may result in fire, electric shock, or malfunction.

Power cord

Remove the accumulated dust or dirt on the power cord regularly.

TROUBLESHOOTING

Problem	Solution
Cannot control the TV with the remote control.	• Check the remote control sensor on the product and try again. • Check if there is any obstacle between the product and the remote control. • Check if the batteries are still working and properly installed (⊕ to ⊕, ⊖ to ⊖).
No image display and no sound is produced.	• Check if the product is turned on. • Check if the power cord is connected to a wall outlet. • Check if there is a problem in the wall outlet by connecting other products.
The TV turns off suddenly.	• Check the power control settings. The power supply may be interrupted. • Check if the Auto sleep feature is activated in the Time settings.
When connecting to the PC (RGB/HDMI DVI), 'No signal' or 'Invalid Format' is displayed.	• Turn the TV off/on using the remote control. • Reconnect the RGB/HDMI cable. • Restart the PC with the TV on.

CAUTION FOR USING EZSIGN 2.0

Only 22/26/32/37/42/47LT640E

- Do not remove a USB drive while data is being copied. It can corrupt the data and EzSign may not work properly.
- While loading a USB device or dongle, your TV may function slower than normal.
- While EzSign contents is running, the movie with internal subtitles is not supported in USB mode. EzSign TV supports only external subtitles.

(External Subtitle format: *.smi/*.srt/*.sub(MicroDVD, Subviewer 1.0/2.0)/*.ass/*.ssa/*.txt(TMPlayer)/*.psb(PowerDivX)

- Some user-created subtitles may not work properly.
- Some special characters are not supported in subtitles.
- HTML tags are not supported in subtitles.
- Subtitles in languages other than the supported languages are not available.
- EzSign 2.0 TV function does not work before completing the initial setup Wizard. Make sure to complete the initial setup Wizard by turning on the TV after installation.
- If the time is set according to the TV signal, it may not appeared exactly for some region. In that case, set the time manually.
- It is recommended that you copy files to the TV memory before playing them, as playing directly from the USB memory for an extended period of time may cause the device to overheat.
- In EzSign 2.0 TV mode, some remote control keys may not work.
- EzSign 2.0 TV dose not support the USB HUB. It is recommended that you connect a USB device directly to the TV without using a USB extension cable as it may not work properly.
- It is recommended that you use EzSign 2.0 TV within 8 hours per day as it is standard.
- Refer to the EzSign 2.0 Editor user guide for details.
- EzSign 2.0 TV does not support Store Demo.

ENGLISH

SPECIFICATIONS

Product specifications may be changed without prior notice due to upgrade of product functions.
For the power supply and power consumption, refer to the label attached to the product.

MODELS		22LT64**, 22LT640H-ZA 22LT640E-ZA	22LT38** 22LT380H-ZA
Dimensions (W x H x D)	With stand(mm)	517.0 x 386.0 x 192.0	517.0 x 386.0 x 192.0
	Without stand(mm)	517.0 x 332.0 x 41.6	517.0 x 332.0 x 41.6
Weight	With stand(kg)	3.7	3.7
	Without stand(kg)	3.1	3.1
Power requirement		DC 24 V, 1.4 A AC-DC adaptor : 24 V ⎓, 2.5 A / AC 100-240 V~ 50 / 60 Hz	DC 24 V, 1.4 A AC-DC adaptor : 24 V ⎓, 2.5 A / AC 100-240 V~ 50 / 60 Hz
Power consumption		40 W	40 W

MODELS		26LT64** 26LT640H-ZA 26LT640E-ZA	26LT66** 26LT660H-ZA	26LT38** 26LT380H-ZA
Dimensions (W x H x D)	With stand(mm)	626.0 x 454.0 x 192.0	626.0 x 454.0 x 192.0	626.0 x 454.0 x 192.0
	Without stand(mm)	626.0 x 393.0 x 46.6	626.0 x 393.0 x 46.6	626.0 x 393.0 x 46.6
Weight	With stand(kg)	4.7	4.7	4.7
	Without stand(kg)	4.1	4.1	4.1
Power requirement		DC 24 V, 1.8 A AC-DC adaptor : 24 V ⎓, 2.5 A / AC 100-240 V~ 50 / 60 Hz	DC 24 V, 1.8 A AC-DC adaptor : 24 V ⎓, 2.5 A / AC 100-240 V~ 50 / 60 Hz	DC 24 V, 1.8 A AC-DC adaptor : 24 V ⎓, 2.5 A / AC 100-240 V~ 50 / 60 Hz
Power consumption		50 W	50 W	50 W

MODELS		32LT64** 32LT640H-ZA 32LT640E-ZA	32LT66** 32LT660H-ZA	32LT38** 32LT380H-ZA
Dimensions (W x H x D)	With stand(mm)	766.0 x 536.0 x 232.0	766.0 x 536.0 x 232.0	766.0 x 536.0 x 232.0
	Without stand(mm)	766.0 x 476.0 x 68.5	766.0 x 476.0 x 68.5	766.0 x 476.0 x 68.5
Weight	With stand(kg)	9.2	9.2	9.2
	Without stand(kg)	8.0	8.0	8.0
Power requirement		AC 100-240 V~ 50 / 60 Hz	AC 100-240 V~ 50 / 60 Hz	AC 100-240 V~ 50 / 60 Hz
Power consumption		60W	60W	60W

MODELS		32LT74** 32LT740H-ZA	32LT76** 32LT760H-ZA
Dimensions (W x H x D)	With stand(mm)	766.0 x 536.0 x 232.0	766.0 x 536.0 x 232.0
	Without stand(mm)	766.0 x 476.0 x 68.5	766.0 x 476.0 x 68.5
Weight	With stand(kg)	9.2	9.2
	Without stand(kg)	8.0	8.0
Power requirement		AC 100-240 V~ 50 / 60 Hz	AC 100-240 V~ 50 / 60 Hz
Power consumption		80W	60W

MODELS		37LT64**	37LT66**	37LT38**
		37LT640H-ZA 37LT640E-ZA	37LT660H-ZA	37LT380H-ZA
Dimensions (W x H x D)	With stand(mm)	867.0 x 593.0 x 232.0	867.0 x 593.0 x 232.0	867.0 x 593.0 x 232.0
	Without stand(mm)	867.0 x 533.0 x 68.6	867.0 x 533.0 x 68.6	867.0 x 533.0 x 68.6
Weight	With stand(kg)	11.2	11.2	11.2
	Without stand(kg)	10.0	10.0	10.0
Power requirement		AC 100-240 V~ 50 / 60 Hz	AC 100-240 V~ 50 / 60 Hz	AC 100-240 V~ 50 / 60 Hz
Power consumption		90W	90W	90W

MODELS		37LT74**	37LT76**
		37LT740H-ZA	37LT760H-ZA
Dimensions (W x H x D)	With stand(mm)	867.0 x 593.0 x 232.0	867.0 x 593.0 x 232.0
	Without stand(mm)	867.0 x 533.0 x 68.6	867.0 x 533.0 x 68.6
Weight	With stand(kg)	11.2	11.2
	Without stand(kg)	10.0	10.0
Power requirement		AC 100-240 V~ 50 / 60 Hz	AC 100-240 V~ 50 / 60 Hz
Power consumption		100W	90W

MODELS		42LT64**	42LT66**	42LT38**
		42LT640H-ZA 42LT640E-ZA	42LT660H-ZA	42LT380H-ZA
Dimensions (W x H x D)	With stand(mm)	992.0 x 667.0 x 273.0	992.0 x 667.0 x 273.0	992.0 x 667.0 x 273.0
	Without stand(mm)	992.0 x 604.0 x 55.0	992.0 x 604.0 x 55.0	992.0 x 604.0 x 55.0
Weight	With stand(kg)	15.5	15.5	15.5
	Without stand(kg)	13.5	13.5	13.5
Power requirement		AC 100-240 V~ 50 / 60 Hz	AC 100-240 V~ 50 / 60 Hz	AC 100-240 V~ 50 / 60 Hz
Power consumption		100W	100W	100W

MODELS		42LT74**	42LT76**
		42LT740H-ZA	42LT760H-ZA
Dimensions (W x H x D)	With stand(mm)	992.0 x 667.0 x 273.0	992.0 x 667.0 x 273.0
	Without stand(mm)	992.0 x 604.0 x 55.0	992.0 x 604.0 x 55.0
Weight	With stand(kg)	15.5	15.5
	Without stand(kg)	13.5	13.5
Power requirement		AC 100-240 V~ 50 / 60 Hz	AC 100-240 V~ 50 / 60 Hz
Power consumption		120W	100W

MODELS		47LT64**	47LT66**	47LT38**
		47LT640H-ZA 47LT640E-ZA	47LT660H-ZA	47LT380H-ZA
Dimensions (W x H x D)	With stand(mm)	1101.0 x 729.0 x 273.0	1101.0 x 729.0 x 273.0	1101.0 x 729.0 x 273.0
	Without stand(mm)	1101.0 x 665.0 x 54.5	1101.0 x 665.0 x 54.5	1101.0 x 665.0 x 54.5
Weight	With stand(kg)	17.3	17.3	17.3
	Without stand(kg)	15.3	15.3	15.3
Power requirement		AC 100-240 V~ 50 / 60 Hz	AC 100-240 V~ 50 / 60 Hz	AC 100-240 V~ 50 / 60 Hz
Power consumption		120W	120W	120W

MODELS		47LT74**	47LT76**
		47LT740H-ZA	47LT760H-ZA
Dimensions (W x H x D)	With stand(mm)	1101.0 x 729.0 x 273.0	1101.0 x 729.0 x 273.0
	Without stand(mm)	1101.0 x 665.0 x 54.5	1101.0 x 665.0 x 54.5
Weight	With stand(kg)	17.3	17.3
	Without stand(kg)	15.3	15.3
Power requirement		AC 100-240 V~ 50 / 60 Hz	AC 100-240 V~ 50/60 Hz
Power consumption		120W	120 W

CI Module Size (W x H x D)		100.0 mm x 55.0 mm x 5.0 mm
Environment condition	Operating Temperature	0 °C to 40 °C
	Operating Humidity	Less than 80 %
	Storage Temperature	-20 °C to 60 °C
	Storage Humidity	Less than 85 %

		Digital TV	Analogue TV
Television system		DVB-T DVB-C	PAL/SECAM B/G/D/K/I/I', SECAM L/L'
Programme coverage		VHF, UHF	VHF: E2 to E12, UHF: E21 to E69, CATV: S1 to S20, HYPER: S21 to S47
Maximum number of storable programmes	LT64**, T66**, LT38**	1,086	
	LT74**[1]	500	
	LT76**	1,200	
External antenna impedance		75 Ω	

1 In country that Digtal broadcasting regulation isn't fixed, some DTV function may not work depending on digital broadcasting circumstances. (Only DTV)

Product specifications may be changed without prior notice due to upgrade of product functions. (Only 32/37/42/47LT76**)

Wireless LAN module(TWFM-B003D) specification	
Standard	IEEE802.11a/b/g/n
Frequency Range	2400 to 2483.5 MHz 5150 to 5250 MHz 5725 to 5850 MHz (for Non EU)
Modulation	CCK / OFDM / MIMO
Output Power (Typical)	802.11a: 11 dBm 802.11b: 15 dBm 802.11g: 13 dBm 802.11n - 2.4GHz: 13 dBm 802.11n - 5GHz: 13 dBm
Data rate	802.11a/g: 54 Mbps 802.11b: 11 Mbps 802.11n: 300 Mbps
Antenna Gain (Typical)	2400 to 2483.5 MHz: -2.5dBi 5150 to 5250 MHz: -2.2dBi 5725 to 5850 MHz: -2.9dBi
Occupied bandwidth	802.11a/b/g: HT20 802.11n: HT20/40
• Because band channel used by the country could be different, the user can not change or adjust the operating frequency and this product is set for the regional frequency table.	

HDMI/DVI-DTV supported mode

Resolution	Horizontal Frequency (kHz)	Vertical Frequency (Hz)
720x480	31.469 31.5	59.94 60
720x576	31.25	50
1280x720	37.5 44.96 45	50 59.94 60
1920x1080	33.72 33.75 28.125 26.97 27 33.716 33.75 56.25 67.43 67.5	59.94 60 50 23.97 24 29.976 30.00 50 59.94 60

RGB-PC, HDMI/DVI-PC supported mode

Resolution	Horizontal Frequency (kHz)	Vertical Frequency (Hz)
720x400	31.468	70.08
640x480	31.469	59.94
800x600	37.879	60.31
1024x768	48.363	60.00
1280x720	45	60
1280x768	47.78	59.87
1360x768	47.72	59.80
1280x1024	63.981	60.02
1920x1080 (RGB-PC)	66.587	59.93
1920x1080 (HDMI-PC)	67.5	60.00

(Only 37/42/47LT64**, 37/42/47LT66**, 37/42/47LT38**, 37/42/47LT74**, 37/42/47LT76**)

Component port connecting information

(Only LT64**, LT66**, LT38**, LT74**)

Component ports on the TV	Y	P_B	P_R

Video output ports on DVD player	Y	P_B	P_R
	Y	B-Y	R-Y
	Y	Cb	Cr
	Y	Pb	Pr

Signal	Component
480i/576i	O
480p/576p	O
720p/1080i	O
1080p	O (50 Hz / 60 Hz only)

IR CODES

- This feature is not available for all models.

Code (Hexa)	Function	Note
08	⏻ (POWER)	Remote control Button (Power On/Off)
95	ENERGY SAVING	Remote control Button
30	AV MODE	Remote control Button
0B	INPUT	Remote control Button
F0	TV/RAD	Remote control Button
10-19	Number Key 0-9	Remote control Button
53	LIST	Remote control Button
1A	Q.VIEW	Remote control Button
02	◿ +	Remote control Button
03	◿ −	Remote control Button
79	RATIO	Remote control Button
1E	FAV	Remote control Button
09	MUTE (DELETE)	Remote control Button
00	P∧	Remote control Button
01	P∨	Remote control Button
AB	GUIDE	Remote control Button
0C	PORTAL	Remote control Button
AA	INFO	Remote control Button
43	Home	Remote control Button
28	⮌ (BACK)	Remote control Button
5B	EXIT	Remote control Button
44	OK	Remote control Button
40	∧	Remote control Button
41	∨	Remote control Button
07	<	Remote control Button
06	>	Remote control Button
72	RED	Remote control Button
71	GREEN	Remote control Button
63	YELLOW	Remote control Button
61	BLUE	Remote control Button
20	TEXT	Remote control Button
21	T.OPT(T.Option)	Remote control Button
39	SUBTITLE	Remote control Button
B1	■	Remote control Button
B0	▶	Remote control Button
BA	⏸	Remote control Button
8E	▶▶	Remote control Button
8F	◀◀	Remote control Button
7E	SIMPLINK	Remote control Button
45	Q.MENU	Remote control Button
91	AD	Remote control Button
E8	ALARM	Remote control Button
1E	MARK (CHAR/NUM)	Remote control Button

ENGLISH

EXTERNAL CONTROL DEVICE SETUP

RS-232C Setup

Connect the RS-232C (serial port) input jack to an external control device (such as a computer or an A/V control system) to control the product's functions externally.
Connect the serial port of the control device to the RS-232C jack on the product back panel.
Note: RS-232C connection cables are not supplied with the product.

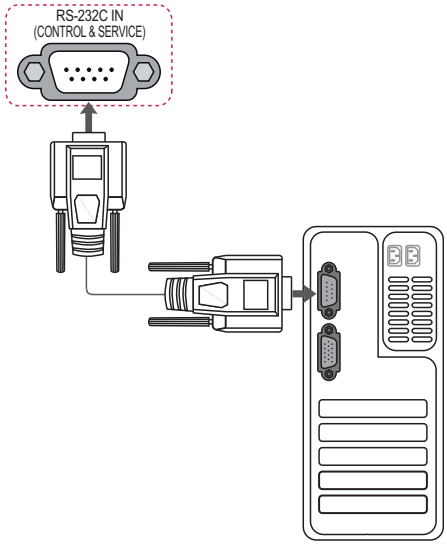

Type of connector; D-Sub 9-Pin Male

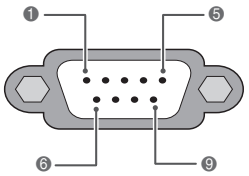

No.	Pin name
1	3.5V
2	RXD (Receive data)
3	TXD (Transmit data)
4	IR OUT from TV
5	GND
6	No Connection
7	+5V Power out
8	No Connection
9	+12V Power out

RS-232C Configurations

7-Wire Configurations (Standard RS-232C cable)

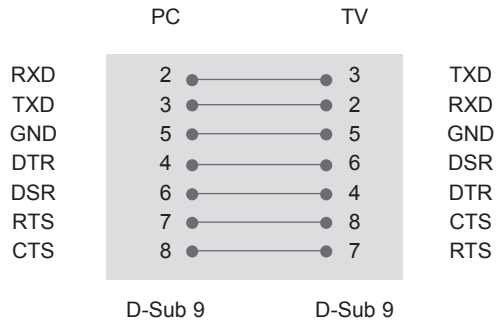

3-Wire Configurations(Not standard)

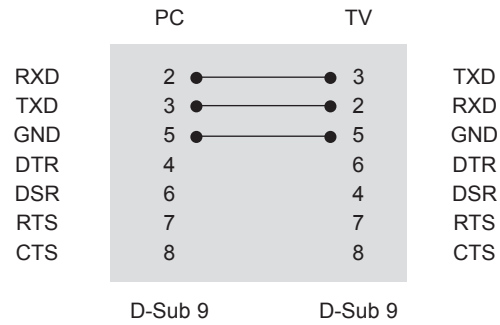

Set ID

Set ID number. "**Real Data Mapping**".

1. Press **Home** to access the main menus.
2. Press the Navigation buttons to scroll to **OPTION** and press **OK**.
3. Press the Navigation buttons to scroll to **SET ID** and press **OK**.
4. Scroll left or right to select a set ID number and select **CLOSE**. The adjustment range is 1-99.
5. When you are finished, press **EXIT**.

Communication Parameters

- Baud rate: 9600 bps (UART)
- Data length: 8 bits
- Parity : None
- Stop bit: 1 bit
- Communication code: ASCII code
- Use a crossed (reverse) cable.

Command reference list

(Depending on model)

	COMMAND1	COMMAND2	DATA (Hexadeci-mal)		COMMAND1	COMMAND2	DATA (Hexadeci-mal)
01. Power	k	a	00 to 01	13. Treble	k	r	00 to 64
02. Aspect Ratio	k	c	(See p.35)	14. Bass	k	s	00 to 64
03. Screen Mute	k	d	(See p.35)	15. Balance	k	t	00 to 64
04. Volume Mute	k	e	00 to 01	16. Colour Temperature	x	u	00 to 64
05. Volume Control	k	f	00 to 64	17. Energy Saving	j	q	00 to 05
06. Contrast	k	g	00 to 64	18. Auto Configu-ration	j	u	01
07. Brightness	k	h	00 to 64	19. Tune Command	m	a	(See p.37)
08. Colour	k	i	00 to 64	20. Programme Add/Skip	m	b	00 to 01
09. Tint	k	j	00 to 64	21. Key	m	c	Key Code
10. Sharpness	k	k	00 to 64	22. Control Back Light	m	g	00 to 64
11. OSD Select	k	l	00 to 01	23. Input select (Main Picture Input)	x	b	(See p.38)
12. Remote Control Lock Mode	k	m	00 to 01				

- * Note : During USB operations such as DivX or EMF, all commands except Power(ka) and Key(mc) are not executed and treated as NG.

Transmission / Receiving Protocol

Transmission

[Command1][Command2][ ][Set ID][ ][Data][Cr]

[Command 1] : First command to control the TV.(j, k, m or x)
[Command 2] : Second command to control the TV.
[Set ID] : You can adjust the set ID to choose desired monitor ID number in option menu. Adjustment range is 1 to 99. When selecting Set ID '0', every connected set is controlled.
Set ID is indicated as decimal (1 to 99) on menu and as Hexa decimal (0x0 to 0x63) on transmission/receiving protocol.
[DATA] : To transmit command data. Transmit 'FF' data to read status of command.
[Cr] : Carriage Return
ASCII code '0x0D'
[ ] : ASCII code 'space (0x20)'

OK Acknowledgement

[Command2][ ][Set ID][ ][OK][Data][x]

* The set transmits ACK (acknowledgement) based on this format when receiving normal data. At this time, if the data is data read mode, it indicates present status data. If the data is data write mode, it returns the data of the PC computer.

Error Acknowledgement

[Command2][ ][Set ID][ ][NG][Data][x]

* The set transmits ACK (acknowledgement) based on this format when receiving abnormal data from non-viable functions or communication errors.

Data 00: Illegal Code

01. Power (Command: k a)

► To control Power On/Off of the set.

Transmission[k][a][ ][Set ID][ ][Data][Cr]

Data 00 : Power Off 01 : Power On

Ack [a][ ][Set ID][ ][OK/NG][Data][x]

► To show Power On/Off.

Transmission [k][a][ ][Set ID][ ][FF][Cr]

Ack [a][ ][Set ID][ ][OK/NG][Data][x]

* Similarly, if other functions transmit '0xFF' data based on this format, Acknowledgement data feed back presents status about each function.
* OK Ack., Error Ack. and other message may display on the screen when TV is power On.

02. Aspect Ratio (Command: k c) (Main Picture Size)

► To adjust the screen format. (Main picture format)
You can also adjust the screen format using the Aspect Ratio in the Q.MENU. or PICTURE menu.

Transmission [k][c][ ][Set ID][ ][Data][Cr]

Data 01 : Normal screen (4:3)
02 : Wide screen (16:9)
04 : Zoom
06 : Original
07 : 14:9
09 : Just Scan
0B : Full Wide
10 to 1F : Cinema Zoom 1 to 16

Ack [c][ ][Set ID][ ][OK/NG][Data][x]

* Using the PC input, you select either 16:9 or 4:3 screen aspect ratio.
* In DTV/HDMI (1080i 50 Hz / 60 Hz, 720p 50Hz / 60 Hz, 1080p 24 Hz / 30 Hz / 50 Hz / 60 Hz), Component(720p, 1080i, 1080p 50 Hz / 60 Hz) mode, Just Scan is available.
* Full Wide is supported only for DTV.

03. Screen Mute (Command: k d)

► To select screen mute on/off.

Transmission [k][d][ ][Set ID][ ][Data][Cr]

Data 00 : Screen mute off (Picture on)
Video mute off
01 : Screen mute on (Picture off)
10 : Video mute on

Ack [d][ ][Set ID][ ][OK/NG][Data][x]

* In case of video mute on only, TV will display On Screen Display(OSD). But, in case of Screen mute on, TV will not display OSD.

04. Volume Mute (Command: k e)

► To control volume mute on/off.
You can also adjust mute using the MUTE button on remote control.

Transmission [k][e][ ][Set ID][ ][Data][Cr]

Data 00 : Volume mute on (Volume off)
01 : Volume mute off (Volume on)

Ack [e][ ][Set ID][ ][OK/NG][Data][x]

05. Volume Control (Command: k f)

► To adjust volume.
You can also adjust volume with the volume buttons on remote control.

Transmission [k][f][ ][Set ID][ ][Data][Cr]

Data Min : 00 to Max : 64
* Refer to 'Real data mapping'. See p.38.

Ack [f][ ][Set ID][ ][OK/NG][Data][x]

06. Contrast (Command: k g)

► To adjust screen contrast.
You can also adjust contrast in the PICTURE menu.

Transmission [k][g][ ][Set ID][ ][Data][Cr]

Data Min : 00 to Max : 64
* Refer to 'Real data mapping'. See p.38.

Ack [g][ ][Set ID][ ][OK/NG][Data][x]

07. Brightness (Command: k h)

► To adjust screen brightness.
You can also adjust brightness in the PICTURE menu.

Transmission [k][h][ ][Set ID][ ][Data][Cr]

Data Min : 00 to Max : 64
* Refer to 'Real data mapping'. See p.38.

Ack [h][ ][Set ID][ ][OK/NG][Data][x]

08. Colour (Command: k i)

► To adjust the screen colour.
You can also adjust colour in the PICTURE menu.

Transmission [k][i][ ][Set ID][ ][Data][Cr]

Data Min : 00 to Max : 64
* Refer to 'Real data mapping'. See p.38

Ack [i][ ][Set ID][ ][OK/NG][Data][x]

09. Tint (Command: k j)

► To adjust the screen tint.
You can also adjust tint in the PICTURE menu.

Transmission [k][j][ ][Set ID][ ][Data][Cr]

Data Red : 00 to Green : 64
* Refer to 'Real data mapping'. See p.38.

Ack [j][ ][Set ID][ ][OK/NG][Data][x]

10. Sharpness (Command: k k)

► To adjust the screen sharpness.
You can also adjust sharpness in the PICTURE menu.

Transmission [k][k][ ][Set ID][ ][Data][Cr]

Data Min : 00 to Max : 64
* Refer to 'Real data mapping'. See p.38.

Ack [k][ ][Set ID][ ][OK/NG][Data][x]

11. OSD Select (Command: k l)

► To select OSD (On Screen Display) on/off when controlling remotely.

Transmission [k][l][ ][Set ID][ ][Data][Cr]

Data 00 : OSD off 01 : OSD on

Ack [l][ ][Set ID][ ][OK/NG][Data][x]

12. Remote control lock mode (Command: k m)

► To lock the front panel controls on the monitor and remote control.

Transmission [k][m][ ][Set ID][ ][Data][Cr]

Data 00 : Lock off 01 : Lock on

Ack [m][ ][Set ID][ ][OK/NG][Data][x]

* If you are not using the remote control, use this mode.
When main power is on/off, external control lock is released.
* In the standby mode, if key lock is on, TV will not turn on by power on key of IR & Local Key.

13. Treble (Command: k r)

► To adjust treble.
You can also adjust treble in the AUDIO menu.

Transmission [k][r][ ][Set ID][ ][Data][Cr]

Data Min : 00 to Max : 64
* Refer to 'Real data mapping'. See p.38.

Ack [r][ ][Set ID][ ][OK/NG][Data][x]

14. Bass (Command: k s)

► To adjust bass.
You can also adjust bass in the AUDIO menu.

Transmission [k][s][ ][Set ID][ ][Data][Cr]

Data Min : 00 to Max : 64
* Refer to 'Real data mapping'. See p.38.

Ack [s][ ][Set ID][ ][OK/NG][Data][x]

15. Balance (Command: k t)

► To adjust balance.
You can also adjust balance in the AUDIO menu.

Transmission [k][t][ ][Set ID][ ][Data][Cr]

Data Min : 00 to Max : 64
* Refer to 'Real data mapping'. See p.38.

Ack [t][ ][Set ID][ ][OK/NG][Data][x]

16. Colour Temperature (Command: x u)

► To adjust colour temperature. You can also adjust Colour Temperature in the PICTURE menu.

Transmission [x][u][ ][Set ID][ ][Data][Cr]

Data Min : 00 to Max : 64
* Refer to 'Real data mapping'. See p.38.

Ack [u][ ][Set ID][ ][OK/NG][Data][x]

17. Energy Saving (Command: j q)

► To reduce the power consumption of the TV. You can also adjust Energy Saving in PICTURE menu.

Transmission [j][q][ ][Set ID][ ][Data][Cr]

Power Saving Function					Level				Description
7	6	5	4		3	2	1	0	
0	0	0	0	Low Power	0	0	0	0	Off
0	0	0	0	Low Power	0	0	0	1	Minimum
0	0	0	0	Low Power	0	0	1	0	Medium
0	0	0	0	Low Power	0	0	1	1	Maximum
0	0	0	0	Low Power	0	1	0	1	Screen Off

Ack [q][ ][Set ID][ ][OK/NG][Data][x]

18. Auto Configure(Command: j u)

► To adjust picture position and minimize image shaking automatically. It works only in RGB (PC) mode.

Transmission [j][u][ ][Set ID][ ][Data][Cr]

Data 01: To set

Ack [u][ ][Set ID][ ][OK/NG][Data][x]

19. Tune Command (Command: m a)

► Select channel to following physical number.

Transmission [m][a][ ][Set ID][ ][Data0][ ][Data1][ ][Data2][Cr]

Data00 : High channel data
Data01 : Low channel data
ex. No. 47 -> 00 2F (2FH)
No. 394 -> 01 8A (18AH),
DTV No. 0 -> Don't care
Data02 : [Antena]
0x00 : Analog Main
0x10 : DTV Main
0x20 : Radio

[Cable]
0x80 : Analog Main
0x90 : DTV Main
0xA0 : Radio
Channel data range
Analog - Min: 00 to Max: 63 (0 to 99)
Digital - Min: 00 to Max: 3E7 (0 to 999)

Ack [a][ ][Set ID][ ][OK/NG][Data][x]

Data Min: 00 to Max: 7DH

20. Programme Add/Skip(Command: m b)

► To set skip status for the current Programme.

Transmission [m][b][ ][Set ID][ ][Data][Cr]

Data 00 : Skip 01 : Add

Ack [b][ ][Set ID][ ][OK/NG][Data][x]

21. Key(Command: m c)

► To send IR remote key code.

Transmission [m][c][ ][Set ID][ ][Data][Cr]

Data Key code - See p.31.

Ack [c][ ][Set ID][ ][OK/NG][Data][x]

22. Control Back Light(Command: m g)

► To control the back light.

Transmission [m][g][ ][Set ID][ ][Data][Cr]

Data Min : 00 to Max : 64

Ack [g][ ][Set ID][ ][OK/NG][Data][x]

ENGLISH

23. Input select (Command: x b)

(Main Picture Input)

► To select input source for main picture.

Transmission [x][b][ ][Set ID][ ][Data][Cr]

Data Structure

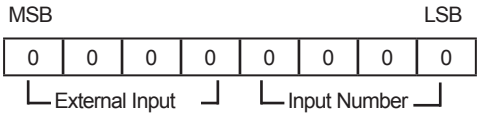

External Input				Data
0	0	0	0	DTV
0	0	0	1	Analogue
0	0	1	0	AV
0	1	0	0	Component
0	1	1	0	RGB
0	1	1	1	HDMI
1	0	0	0	
1	0	0	1	
1	0	1	0	

Input Number				Data
0	0	0	0	Input1
0	0	0	1	Input2
0	0	1	0	Input3
0	0	1	1	Input4

Ack [b][ ][Set ID][ ][OK/NG][Data][x]

* **Real data mapping**

00 : Step 0
⋮
A : Step 10 (Set ID 10)
⋮
F : Step 15 (Set ID 15)
10 : Step 16 (Set ID 16)
⋮
63 : Step 99 (SET ID 99)
64 : Step 100
⋮
6E : Step 110
⋮
73 : Step 115
74 : Step 116
⋮
CF : Step 199
⋮
FE : Step 254
FF : Step 255



The model and serial numbers of the TV is located on the back of the TV
Record it below should you ever need service.

Model _____

Serial _____

