LG
Life's Good

ENGLISH

OWNER'S MANUAL

Mini Hi-Fi System

Please read this manual carefully before operating your set and retain it for future reference.

FOR THE WARRANTY TERMS & CONDITIONS, PLEASE REFER TO BACK COVER OF THIS MANUAL.

CM4630 (CM4630, CMS4630F)
CM4530 (CM4530, CMS4530F, CMS4530W)
CM4430 (CM4430, CMS4530F)
CM4330 (CM4330, CMS4330F)



CM4430-DE_DGBRLLK_ENG_4223.indd 1 2013-01-31 2:50:23

Safety Information



CAUTION: TO REDUCE THE RISK OF ELECTRIC SHOCK DO NOT REMOVE COVER (OR BACK) NO USER-SERVICEABLE PARTS INSIDE REFER SERVICING TO QUALIFIED SERVICE PERSONNEL.



This lightning flash with arrowhead symbol within an equilateral triangle is intended to alert the user to the presence of uninsulated dangerous voltage within the product's enclosure that may be of sufficient magnitude to constitute a risk of electric shock to persons.



The exclamation point within an equilateral triangle is intended to alert the user to the presence of important operating and maintenance (servicing) instructions in the literature accompanying the product.

WARNING: TO PREVENT FIRE OR ELECTRIC SHOCK HAZARD, DO NOT EXPOSE THIS PRODUCT TO RAIN OR MOISTURE.

WARNING: Do not install this equipment in a confined space such as a book case or similar unit.

CAUTION: Do not block any ventilation openings. Install in accordance with the manufacturer's instructions.
Slots and openings in the cabinet are provided for ventilation and to ensure reliable operation of the product and to protect it from over heating. The openings shall be never be blocked by placing the product on a bed, sofa, rug or other similar surface. This product shall not be placed in a built-in installation such as a bookcase or rack unless proper ventilation is provided or the manufacturer's instruction has been adhered to.

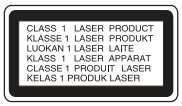

CAUTION: This product employs a Laser System.
To ensure proper use of this product, please read this owner's manual carefully and retain it for future reference. Shall the unit require maintenance, contact an authorized service center.
Use of controls, adjustments or the performance of procedures other than those specified herein may result in hazardous radiation exposure.
To prevent direct exposure to laser beam, do not try to open the enclosure.

CAUTION concerning the Power cord

Most appliances recommend they be placed upon a dedicated circuit;

That is, a single outlet circuit which powers only that appliance and has no additional outlets or branch circuits. Check the specification page of this owner's manual to be certain. Do not overload wall outlets. Overloaded wall outlets, loose or damaged wall outlets, extension cords, frayed power cords, or damaged or cracked wire insulation are dangerous. Any of these conditions could result in electric shock or fire. Periodically examine the cord of your appliance, and if its appearance indicates damage or deterioration, unplug it, discontinue use of the appliance, and have the cord replaced with an exact replacement part by an authorized service center. Protect the power cord from physical or mechanical abuse, such as being twisted, kinked, pinched, closed in a door, or walked upon. Pay particular attention to plugs, wall outlets, and the point where the cord exits the appliance. To disconnect power from the mains, pull out the mains cord plug. When installing the product, ensure that the plug is easily accessible.

This device is equipped with a portable battery or accumulator.

Safety way to remove the battery or the battery from the equipment: Remove the old battery or battery pack, follow the steps in reverse order than the assembly. To prevent contamination of the environment and bring on possible threat to human and animal health, the old battery or the battery put it in the appropriate container at designated collection points. Do not dispose of batteries or battery together with other waste. It is recommended that you use local, free reimbursement systems batteries and accumulators. The battery shall not be exposed to excessive heat such as sunshine, fire or the like.

CAUTION: The apparatus shall not be exposed to water (dripping or splashing) and no objects filled with liquids, such as vases, shall be placed on the apparatus.

Disposal of your old appliance



1. When this crossed-out wheeled bin symbol is attached to a product it means the product is covered by the European Directive 2002/96/EC.
2. All electrical and electronic products should be disposed of separately from the municipal waste stream via designated collection facilities appointed by the government or the local authorities.
3. The correct disposal of your old appliance will help prevent potential negative consequences for the environment and human health.
4. For more detailed information about disposal of your old appliance, please contact your city office, waste disposal service or the shop where you purchased the product.

Disposal of waste batteries/accumulators



1. When this crossed-out wheeled bin symbol is attached to batteries/ accumulators of Your product it means they are covered by European Directive 2006/66/EC.
2. This symbol may be combined with chemical symbols for mercury(Hg), cadmium(Cd) or lead(Pb) if the battery Contains more that 0.0005% of mercury,0.002% of cadmium or 0.004% of lead.
3. All batteries/accumulators should be disposed separately from the municipal waste stream via designated collection facilities appointed by the government or the local authorities.
4. The correct disposal of Your old batteries/accumulators will help to prevent potential negative consequences for the environment, animal and human health.
5. For more detailed information about disposal of Your old batteries/ accumulators, please contact Your city office, waste disposal service or the shop where You purchased the product.

CE

LG Electronics hereby declares that this/these product(s) is/are in compliance with the essential requirements and other relevant provisions of Directive 2004/108/EC, 2006/95/EC, 2009/125/EC and 2011/65/EU.

Contact office for compliance of this product:

LG Electronics Inc.
EU Representative, Krijgsman 1,
1186 DM Amstelveen, The Netherlands

- Please note that this is NOT a Customer Service contact point. For Customer Service Information, see Warranty Card or contact the dealer that you purchased this product.

POWER: This unit operates on a mains supply of 200-240V~, 50/60Hz.
Wiring: This unit is supplied with a BS 1363 approved main plug. When replacing the fuse, always use of the same rating approved to BS 1362. Never use this plug with the fuse cover omitted. To obtain a replacement fuse cover contact your dealer. If the type of plug supplied is not suitable for the mains sockets in your home, then the plug should be removed and a suitable type fitted. Please refer to the wiring instructions below:

Warning: A mains plug removed from the mains lead of this unit must be destroyed. A mains plug with bared wires is hazardous if inserted in a mains socket. Do not connect either wire to the earth pin, marked with the letter E or with the earth symbol ⏚ or coloured green or green and yellow. If any other plug is fitted, use same rating of fuse in the plug.

Important: The wires in this mains lead are coloured in accordance with the following codes:
- BLUE: NEUTRAL, BROWN: LIVE - As the colours of the wires in the mains lead of this unit may not correspond with the coloured marking identifying the terminals in your plug, proceed as follows: The wire which is coloured blue must be connected to the terminal which is marked with the letter N or coloured black. The wire which is coloured brown must be connected to the terminal which is marked with the letter L or coloured red.

Table of Contents

1 Getting Started

2 Safety Information
6 Unique Features
6 Accesories
6 Playable file Requirement
6 – MP3/WMA music file requirement
7 – Compatible USB Devices
7 – USB device requirement
8 Remote Control
9 Front Panel
11 Rear Panel(CM4530)
12 Rear Panel(CM4630)
13 Rear Panel(CM4430/CM4330)

2 Connecting

14 Connecting to speakers
14 – Attaching the speakers to the unit
15 Antenna Connection
15 Optional Equipment Connection
15 – AUX IN Connection
16 – USB Connection

3 Operating

17 Basic Operations
17 – CD/USB Operations
17 Other Operations
17 – Programmed Playback
17 – Displaying file information
17 – Searching for a folder
18 – Turn off the sound temporarily
18 – Deleting an MP3/WMA file
18 – DEMO
18 – AUTO DJ playback
19 – Listening to the sound from your external device
19 – Auto Power Down
19 Radio Operations
19 – Listening to the radio
20 – Presetting the Radio Stations
20 – Deleting all the saved stations
20 – Improving poor FM reception
20 – Seeing information about a Radio station
21 Sound adjustment
21 – Setting the surround mode
21 Setting the Clock
21 – Setting the alarm
22 – Sleep Timer Setting
22 – Dimmer
22 Advanced Operations
22 – Playing the iPod/iPhone
23 – Compatible iPod/iPhone
24 – Recording to USB
24 – To select recording bit rate and speed

4 Troubleshooting

26 Troubleshooting

5 Appendix

27 Specifications
28 Speaker specifications
29 – Maintenance
29 – Handling the Unit
29 – Notes on Discs
29 Trademarks and Licenses

6 Warranty

30 Warranty

Unique Features

USB Direct Recording

Records music to your USB device.

AUTO DJ

Blends the end of one song into the beginning of another for seamless playback.

USB

Listens to music from your USB device.

Radio

Listens to the radio.

Made for iPod/iPhone

Enjoys music from iPod/iPhone with simple connection.

Accesories

Please check and identify the supplied accessories.

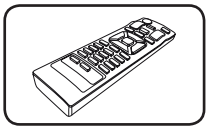

Remote Control (1)

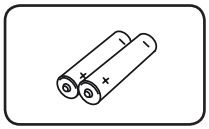

Batteries (2)

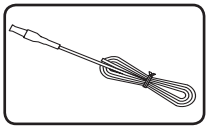

FM Antenna (1)

Playable file Requirement

MP3/WMA music file requirement

MP3/WMA file compatibility with this unit is limited as follows.

- Sampling frequency : within 32 to 48 kHz (MP3), within 32 to 48 kHz (WMA)
- Bit rate : within 32 to 320 kbps (MP3), 40 to 192 kbps (WMA)
- Maximum files : Under 999
- File extensions : ".mp3"/".wma"
- CD-ROM file format : ISO 9660/JOLIET
- We recommend that you use Easy-CD Creator, which creates an ISO 9660 file system.
- You have to set the disc format option to [Mastered] in order to make the discs compatible with the LG players when formatting rewritable discs. When setting the option to Live File System, you cannot use it on LG players. (Mastered/Live File System : Disc format system for Windows Vista)

Compatible USB Devices

- MP3 Player : Flash type MP3 player.
- USB Flash Drive :
  Devices that support USB2.0 or USB1.1.
- The USB function of this unit does not support all USB devices.

USB device requirement

- Devices which require additional program installation when you have connected it to a computer, are not supported.
- Do not extract the USB device while in operation.
- For a large capacity USB, it may take longer than a few minute to be searched.
- To prevent data loss, back up all data.
- If you use a USB extension cable or USB hub, the USB device is not recognized.
- Using NTFS file system is not supported.
  (Only FAT(16/32) file system is supported.)
- This unit is not supported when the total number of files is 1 000 or more.
- External HDD, Card readers, Locked devices, or hard type USB devices are not supported.
- USB port of the unit cannot be connected to PC. The unit cannot be used as a storage device.

Remote Control

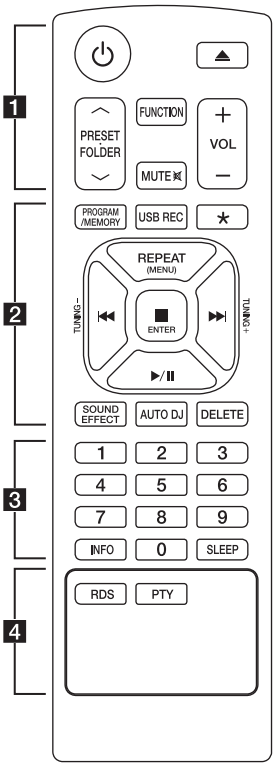

Battery Installation

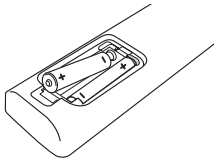

Remove the battery cover on the rear of the Remote Control, and insert two (size AAA) batteries with ⊕ and ⊖ matched correctly

• • • • • • **1** • • • • • •

⏻ (Power) **:** Switches the unit ON or OFF.

⏏ (Open/Close) **:** Opens and closes the disc tray.

PRESET·FOLDER ∧/∨ :

- Searches for a folder of MP3/WMA files. When a CD/USB containing MP3/WMA files in several folders is being played, press **PRESET·FOLDER ∧/∨** to select the folder you want to play.
- Chooses a preset number for a radio station.

FUNCTION : Selects the function and input source.

MUTE : Mutes the sound.

VOL +/- : Adjusts speaker volume.

• • • • • • **2** • • • • • •

PROGRAM/MEMORY :

- Stores radio stations.
- Creates a playlist you want to listen to.

USB REC : USB direct recording.

✱ : The button is not available for any function.

REPEAT(MENU) :

- Listens to your tracks/files repeatedly or randomly.
- Moves to the previous menu on IPOD mode.

⏮/⏭ (Skip/Search) **:**

- Skips Fast backward or Forward.
- Searches for a section within a track/file.

TUNING-/+ : Selects the radio station.

■ ENTER :

- Stops playback or recording.
- Cancels DELETE function.
- Chooses an item on IPOD mode.

▶/II (Play/Pause) **:**

- Starts or pauses playback.
- Selects STEREO/MONO.

SOUND EFFECT : Chooses sound impressions.

AUTO DJ : Selects the AUTO DJ mode. (For more information refer to the page 18)

DELETE : Deletes MP3/WMA files.

• • • • • • **3** • • • • • •

0 to **9** numerical buttons **:** Selects numbered tracks/files, or preset number.

INFO : Sees informations about your music.

SLEEP : Sets the system to turn off automatically at a specified time. (Dimmer : The display window will be darkened by half.)

• • • • • • **4** • • • • • •

RDS : RDS (Radio Data System). (Refer to page 20)

PTY : Searches radio stations by radio type.

Front Panel

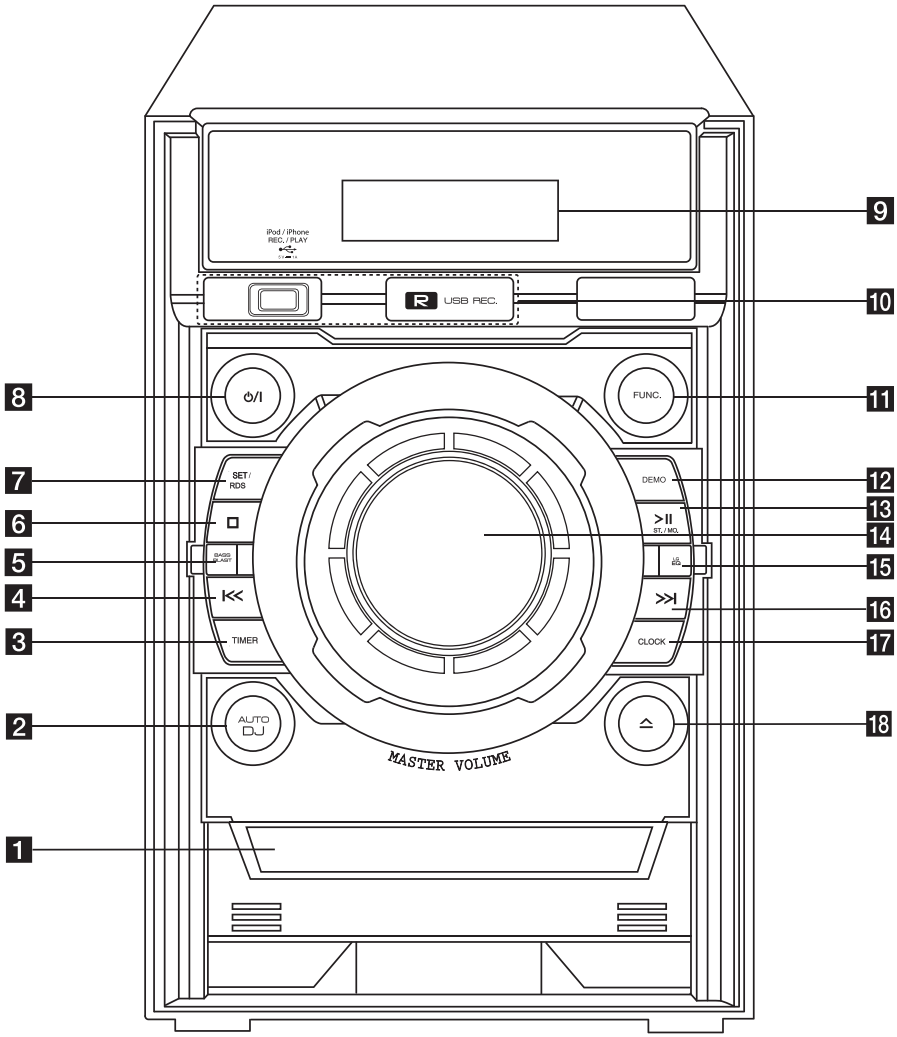
iPod / iPhone REC. / PLAY
USB REC.
FUNC.
SET / RDS
DEMO
TIMER
CLOCK
AUTO DJ
MASTER VOLUME
1
2
3
4
5
6
7
8
9
10
11
12
13
14
15
16
17
18

1 Disc tray
Roads a disc.

2 **AUTO DJ**
Selects the AUTO DJ mode.
(For more informaion refer to the page 18)

3 **TIMER**
Uses your unit as an alarm clock.

4 ⏮ (Skip/Search)
- Searches forward.
- Skips to the previous track/file.

5 **BASS BLAST**
Reinforces the treble, bass and surround effect.

6 ⏹(Stop)
Stops playback or recording.

7 **SET/RDS**
- Confirms the setting.
- RDS (Radio Data System).

8 ⏻/❙ (Power)
Switches the unit ON or OFF.

9 Display window

10 USB
- Plays the audio files by connecting the USB device.
- Connects iPod/iPhone by using iPod/iPhone cable.

R USB REC.
Records music to USB.

11 **FUNC.**
Selects the function or input source.

12 **DEMO**
Demonstrates each of functions.

13 ⏯ **ST./MO.**
- Starts or pauses playback.
- Selects Stereo/Mono.

14 Volume knob
Adjusts volume of speaker.

15 **LG EQ**
Chooses sound impressions.

16 ⏭ (Skip/Search)
- Searches backward.
- Skips to the next track/file.

17 **CLOCK**
Sets the clock and checks the time.

18 ⏏ (Open/Close)
Opens and closes the disc tray.

Rear Panel(CM4530)

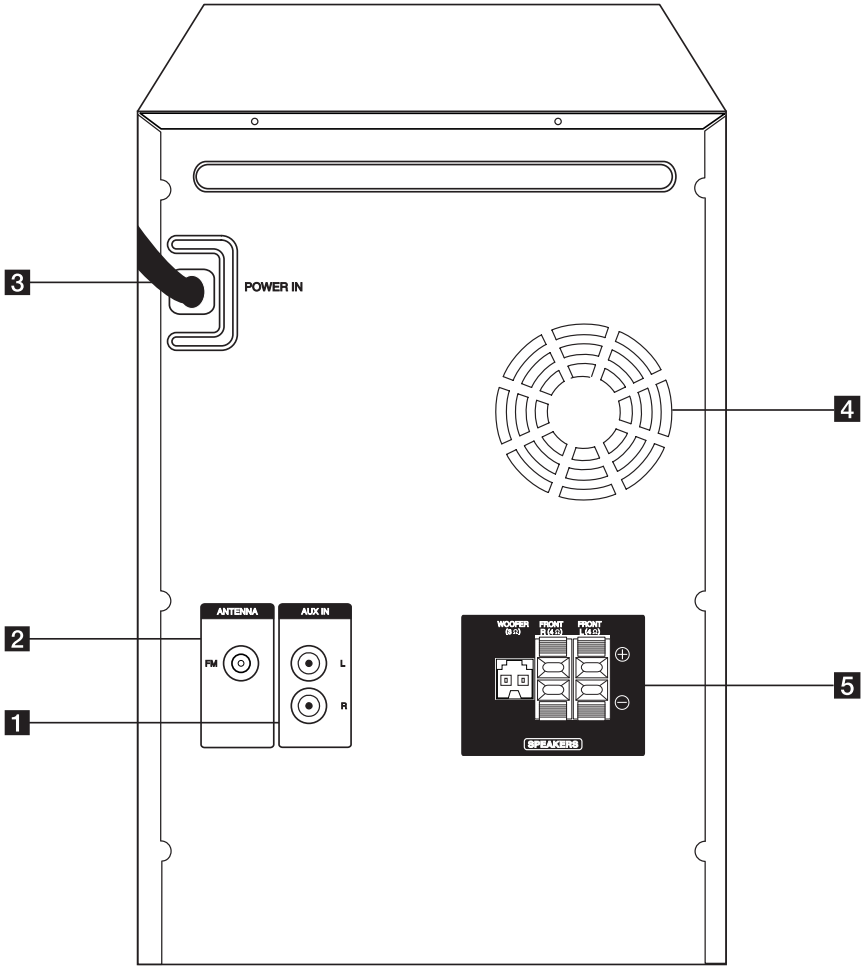

1 **AUX IN (L/R)** connectors
2 **ANTENNA (FM)**
3 **POWER IN**
4 Cooling fan
5 **SPEAKERS** terminal/cord

Rear Panel(CM4630)

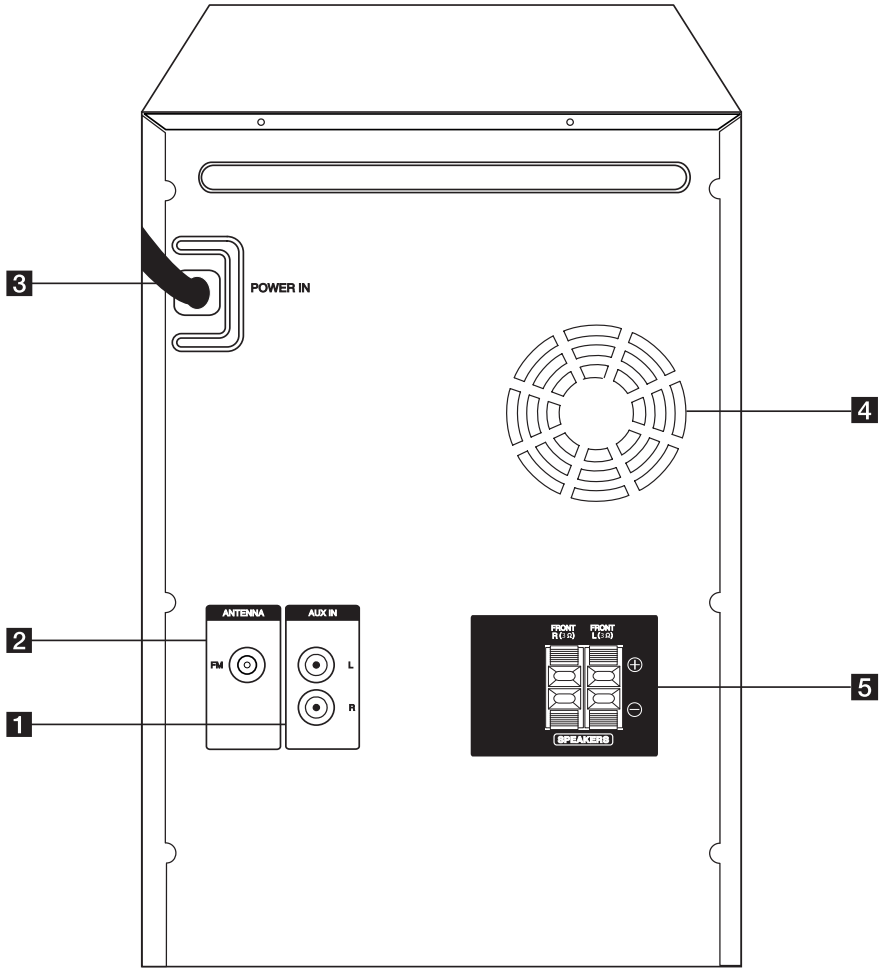

1 **AUX IN (L/R)** connectors
2 **ANTENNA (FM)**
3 **POWER IN**
4 Cooling fan
5 **SPEAKERS** terminal

Rear Panel(CM4430/CM4330)

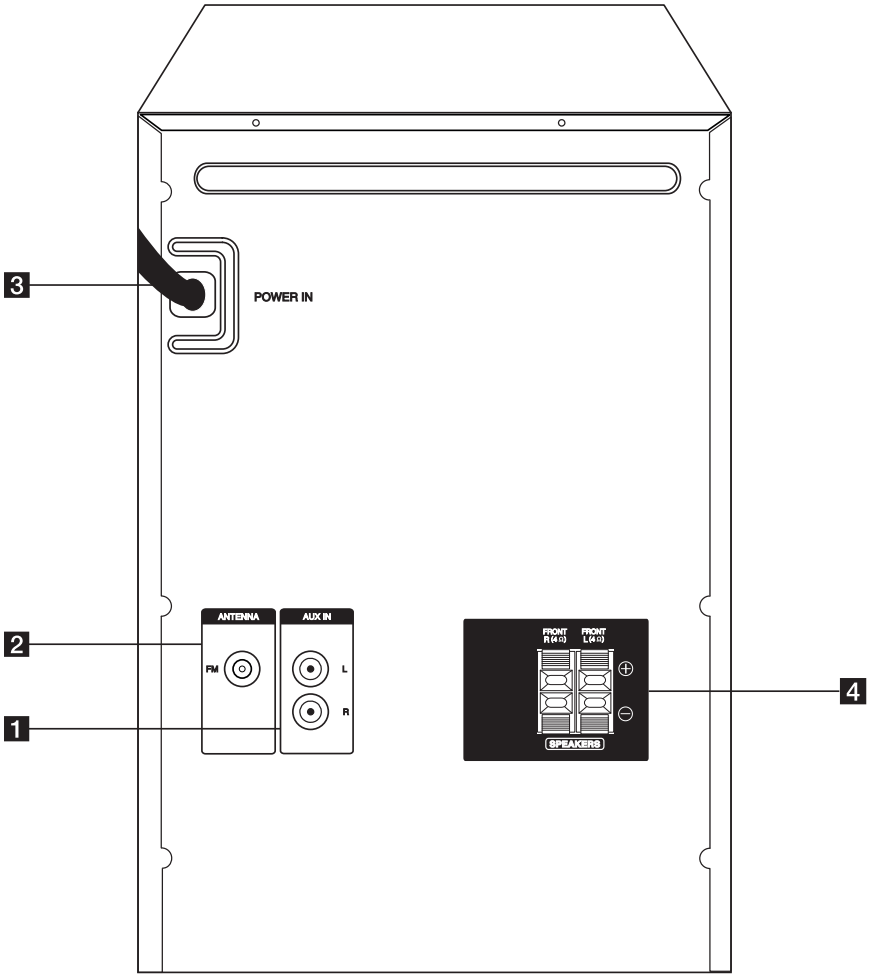

1 **AUX IN (L/R)** connectors
2 **ANTENNA (FM)**
3 **POWER IN**
4 **SPEAKERS** terminal

Connecting to speakers

Attaching the speakers to the unit

To connect the cable to the unit, press each plastic finger pad to open the connection terminals on the unit. Insert the wire and release the finger pad.

Connect the black stripe of each wire to the terminals marked - (minus) and the other end to the terminals marked + (plus).

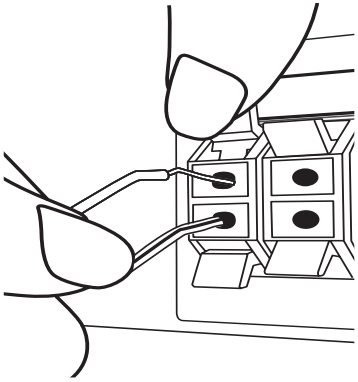

Connect a woofer cord to the player.
When connecting a woofer cord to the player, insert the connector until it clicks.

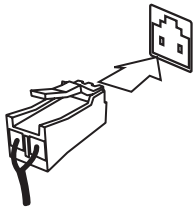

Caution

- Be careful to make sure children do not put their hands or any objects into the *speaker duct.
  *Speaker duct: A hall for plentiful bass sound on speaker cabinet (enclosure)
- The speakers contain magnet parts, so color irregularity may occur on the TV screen or PC monitor screen. Please use the speakers far away from either TV screen or PC monitor.
- Do not connect any other speaker except sub woofer speaker to the sub woofer connection terminal on the rear of the unit.

CM4530

Color	Speaker
Orange	Sub woofer
Red	Front
White	Front

CM4630/CM4430/CM4330

Color	Speaker
Red	Front
White	Front

Antenna Connection

Connect the supplied FM antenna for listening to the radio.

Connect the FM wire antenna to the FM antenna connector.

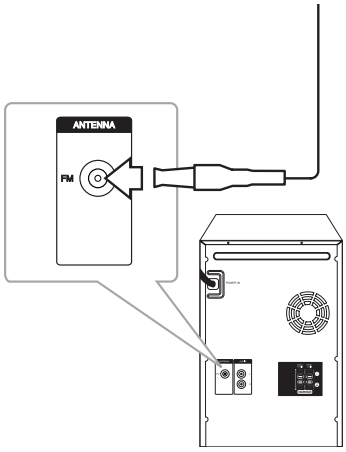

Note

Be sure to fully extend the FM wire antenna.

Optional Equipment Connection

AUX IN Connection

Connect an output of auxiliary device(Camcoder, TV, Player, etc) to the **AUX IN(L/R)** connector.

If your device has only one output for audio(mono), connect it to the left (white) audio jack on the unit.

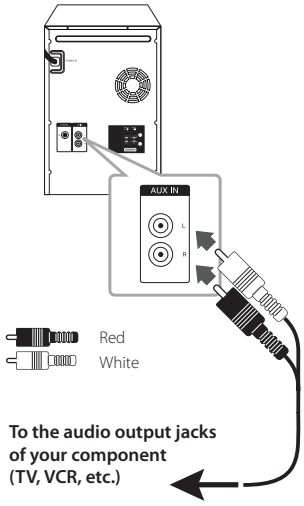

USB Connection

Connect the USB port of USB Memory (or MP3 player, etc.) to the USB port on the front of the unit.

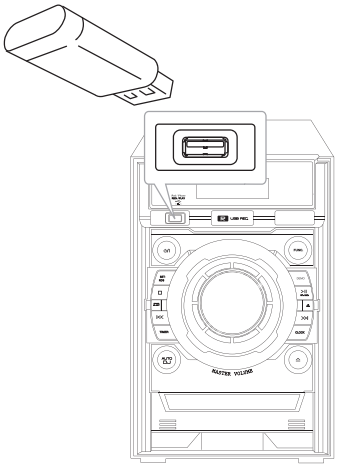

Note

Removing the USB Device from the unit.

1. Choose a different function/mode or press ☐(Stop) twice in a row.
2. Remove the USB device from the unit.

Basic Operations

CD/USB Operations

1. Insert the disc by pressing ⏏ on the remote control or ⏏ on the unit.
   Connect the USB device to the USB port.
2. Select the CD or USB function by pressing **FUNCTION** on the remote control or **FUNC.** on the unit.
3. Select a track/file you want to play by pressing ⏮/⏭ on the remote control or ⏮ / ⏭ on the unit.

To	Do this
Stop	Press ■ **ENTER** or ☐.
Playback	Press ▶/❚❚ or ▶❚❚**ST./MO.**.
Pause	During playback, Press ▶/❚❚ or ▶❚❚**ST./MO.**.
Skipping to the next/ previous track/file	During playback, press ⏮/⏭ or ⏮ / ⏭ to go to the next track/file or to return to the beginning of the current track/file. Playing less than 2 seconds, press ⏮ or ⏮ to go to the previous track/file. Playing after 3 seconds, press ⏮ or ⏮ to go to the beginning of the track/file.
Selecting a track/file directly	Press **0** to **9** numerical buttons to go to the desired file or track directly.
Searching for a section within a track/file	Press and hold ⏮/⏭ or ⏮ / ⏭ during playback and release it at the point you want to listen to.
Playing repeatedly or randomly	Press **REPEAT(MENU)** repeatedly. The display will be changed in the following order. RPT1 -> RPT *DIR (only MP3/WMA) -> RPT ALL -> RANDOM -> OFF. *DIR : Directory

Other Operations

Programmed Playback

The program function enables you to store your favorite files from any disc or USB device.

A program can contain 20 tracks/files.

1. Insert a CD or connect your USB and wait for it to be ordered.
2. Press **PROGRAM/MEMORY** on the remote control in stop status.
3. Press ⏮/⏭ on the remote control to select a track/file.
4. Press **PROGRAM/MEMORY** again to save and select a next track/file.
5. Repeat steps 3-4 to select a next track/file.
6. Press ▶/❚❚ to play the programmed music tracks/files.
7. To clear your selection, press ■ **ENTER** twice.

Note

The programs are also cleared when the disc or USB device is removed, the unit is powered off or the function is switched to others.

Displaying file information

While playing an MP3 file containing file information, you can display the information by pressing **INFO**.

Searching for a folder

1. Press **PRESET·FOLDER** ∧/∨ on the remote control repeatedly until a desired folder appears in the display window.
2. Press ▶/❚❚ to play it. The first file of the folder will be played.

Turn off the sound temporarily

Press **MUTE** on the remote control to mute your sound.

You can mute your sound, for example, to answer the telephone, the "MUTE" will appear and blink in the display window.

To cancel it, press **MUTE** again or change the volume level.

Deleting an MP3/WMA file

You can delete a file, folder or format by pressing **DELETE**. (USB only)

1. Press **DELETE** repeatedly while selecting the MP3/WMA file. This function is supported only in stop status. The display changes in the following order.
   - DEL FILE : Deletes file.
   - DEL DIR : Deletes folder.
   - FORMAT : Formats USB.
2. To delete file/folder or format, press ▶/II on the remote control or press ≻II **ST./MO.** on the unit.
3. If you want to exit the current mode, press ■ **ENTER** on the remote control or press □ on the unit.

Caution

- Do not extract the USB device during operation.(play, delete, etc.)
- Regular back up is recommended to prevent data loss.
- The delete function may not be supported according to the USB status.

DEMO

In power off state, press **DEMO** on the unit once. The unit will power on and display the each of functions in the display window. To cancel the DEMO function, press **DEMO** once more.

Note

You can enjoy other functions during the DEMO. Then the DEMO will pause temporarily.
- Without input key in 10 sec, the DEMO will play back automatically.

AUTO DJ playback

Auto DJ blends the end of one song into the beginning of another for seamless playback. It equalizes volume across tracks for uninterrupted playback.

Press **AUTO DJ** on the remote control or unit repeatedly, the display changes as followings. RANDOM (AUTO DJ RANDOM) -> RPT (AUTO DJ SEQUENTIAL) -> (AUTO DJ OFF)

Mode	Display Window	Description
OFF	- (AUTO DJ OFF)	-
RANDOM	RANDOM (AUTO DJ RANDOM)	The music is played randomly on this mode.
REPEAT	RPT (AUTO DJ SEQUENTIAL)	The music is played repeatedly on this mode.

Note

- Searching for a section within a track/file or playing repeatedly or randomly is not supported on the AUTO DJ mode.
- During AUTO DJ mode, it is not available to search file by pressing **PRESET·FOLDER** Λ/V on the remote control.
- If you move to other functions or stop the music using □ on the unit (or ■ **ENTER** on the remote control) on AUTO DJ mode, AUTO DJ function will be disable.
- AUTO DJ function is not supported in the music file whose length is less than 60 seconds.
- During recording, AUTO DJ function is not available.
- If you change a disc while the AUTO DJ function is activated, the function is deactivated.

Listening to the sound from your external device

The unit can be used to play the sound from many types of external device. (Refer to the page 15)

1. Connect the external device to the **AUX IN(L/R)** connector of the unit.
2. Turn the power on by pressing ⏻/| (Power).
3. Select the AUX function by pressing **FUNC.** on the unit.
4. Turn the external device and start playing it

Auto Power Down

This unit will be off itself to save electronic consumption in the case main unit is not connected to external device and is not used for 25 minutes. So does this unit after 6 hours since Main unit has been connected to other device using analog input.

Radio Operations

Be sure that FM aerial is connected.
(Refer to the page 15)

Listening to the radio

1. Press **FUNCTION** on the remote control or **FUNC.** on the unit until FM appears in the display window.
   The last received station is tuned in.
2. Auto tuning : Press **TUNING -/+** on the remote control or **|<< / >>|** on the unit for about 2 seconds until the frequency indication starts changing, then release. scanning stops when the unit tunes in a station.

   Manual tuning: Press **TUNING -/+** on the remote control or **|<< / >>|** on the unit repeatedly.
3. Adjust the volume by pressing **VOL +/-** on the remote control or by rotating volume knob on the unit repeatedly.

Presetting the Radio Stations

You can preset 50 stations for FM.

Before tuning, make sure to turn down the volume.

1. Press **FUNCTION** on the remote control or **FUNC.** on the unit until FM appears in the display window.
2. Select the desired frequency by pressing **TUNING-/+** on the remote control or **I<< / >>I** on the unit.
3. Press **PROGRAM/MEMORY**. A preset number will blink in the display window.
4. Press **PRESET·FOLDER ∧/∨** to select the preset number you want.
5. Press **PROGRAM/MEMORY**. The station is stored.
6. Repeat steps 2 to 5 to store other stations.
7. To listen to a preset station, press **PRESET·FOLDER ∧/∨** or **0** to **9** numerical buttons.

Deleting all the saved stations

1. Press and hold **PROGRAM/MEMORY** for two seconds. "ERASEALL" will blink in the unit display.
2. Press **PROGRAM/MEMORY** to erase all saved radio stations.

Improving poor FM reception

Press **►/II** on the remote control or **>II ST./MO.** on the unit. This will change the tuner from stereo to mono. Then the reception will be better than before.

Seeing information about a Radio station

The FM tuner is supplied with the RDS (Radio Data System) facility. This shows information about the radio station being listened to. Press **RDS** repeatedly to cycle through the various data types:

PS (Programme Service Name)
The name of the channel will appear in the display.

PTY (Programme Type Recognition)
The programme type (e.g. Jazz or News) will appear in the display.

RT (Radio Text)
A text message contains special information from the broadcast station. This text may scroll across the display.

CT (Time controlled by the channel)
This shows the time and date as broadcast by the station.

You can search the radio stations by programme type by pressing **RDS**. The display will show the last PTY in use. Press **PTY** one or more times to select your preferred programme type. Press and hold **TUNING -/+** The tuner will search automatically. When a station is found, the search will stop.

Sound adjustment

Setting the surround mode

This system has a number of pre-set surround sound fields. You can select a desired sound mode by using **SOUND EFFECT** on the remote control or **LG EQ** on the unit.

The displayed items for the Equalizer may be different depending on sound sources and effects.

On Display	Description
NATURAL	You can enjoy comfortable and natural sound.
AUTO EQ	Realizes the sound equalizer that is the most similar to the genre of which is included in the MP3 ID3 tag of song files.
POP CLASSIC JAZZ ROCK	This program lends an enthusiastic atmosphere to the sound, giving you the feeling you are at an actual rock pop, jazz or classic concert.
MP3 -- OPT	This function is optimized for compressible MP3 file. It improves the treble sound.
BASS	Reinforces the treble, bass and surround sound effect.
LOUDNESS	Improves the bass and treble sound.
BYPASS	You can enjoy the sound without equalizer effect.

Note

- On some speakers, sound may not be heard or heard in low sound depending on the sound mode.
- Maybe you need to reset the surround mode, after switching the input, sometimes even after the sound track changed.
- By pressing **BASS BLAST** on the unit you can directly select the BYPASS or BASS BLAST sound.

Setting the Clock

1. Turn the unit on.
2. Press **CLOCK**.
3. Choose time mode by pressing **I<< / >>I**.
   - AM 12:00 (for an AM and PM display)
     or 0:00 (for a 24 hour display)
4. Press **SET/RDS** to confirm your selection.
5. Select the hours by pressing **I<< / >>I**.
6. Press **SET/RDS**.
7. Select the minutes by pressing **I<< / >>I**.
8. Press **SET/RDS**.
9. If you want to reset the clock, press and hlod **CLOCK**. Then repeat steps 3-8.

Setting the alarm

You can use the unit as an alarm clock.
You have to set the clock before setting the alarm.

1. Turn the unit on.
2. Press **TIMER**.
3. Each of functions will blink. Press **SET/RDS** to select a sound source you want.
4. "ON TIME" will be displayed. This is your desired time to the unit turns on. Press **I<< / >>I** to change the hours and minutes and press **SET/RDS** to save.
5. The "OFF TIME" will be displayed. This is your desired time to the unit turns off. Press **I<< / >>I** to change the hours and minutes and press **SET/RDS** to save.
6. Press **I<< / >>I** to change the volume and press **SET/RDS** to save. The clock icon "🕒" shows that the alarm is set.
7. Press **TIMER**. You can check the setting status.
8. If you want to reset the alarm, press and hlod **TIMER**. Then repeat steps 3-6.

Sleep Timer Setting

Press **SLEEP** on the remote control repeatedly to select delay time between 10 and 180 minutes. After delay time, the unit will turn off. (You can see the following order, 180 ->150 -> 120 -> 90 -> 80 -> 70 -> 60 -> 50 -> 40 -> 30 -> 20 -> 10). To cancel the sleep function, press **SLEEP** repeatedly until the display window get bright.

Note

- Press **SLEEP**. The remaining time appears in the display window.
- Sleep function will work after dimmer function.

Dimmer

Press **SLEEP** once. The display window will be darkened by half. To cancel it, press **SLEEP** repeatedly until the display window get bright.

Note

- After setting a clock function, you can set alarm function.
- If you set the clock and alarm, you can check the time and alarm icon "🕒" by pressing **CLOCK** although the unit is turned off.
- During playback, press **TIMER** two times when the alarm icon "🕒" is displayed. You can check the setting state.
- If you activate the alarm, the alarm icon "🕒" will appear in the display window.
- If you deactivate the alarm, the alarm icon "🕒" will disappear in the display window.
- Alarm function only works when the unit is turned off.
- If the time you set is up, the unit will be turned on automatically.
- Alarm function is not supported even if you choose USB function as an alarm clock when iPod/iPhone is connected to USB port.

Advanced Operations

Playing the iPod/iPhone

You can enjoy the sound with your iPod/iPhone. For details about iPod/iPhone, refer to the iPod/iPhone User Guide.

1. Connect iPod/iPhone to the USB port on the front of the unit by using the iPod/iPhone cable.

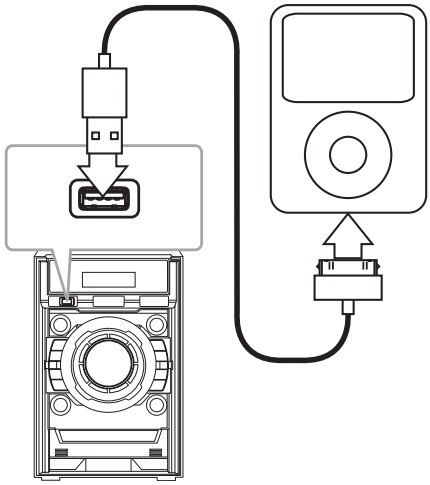

   If you turn this unit on, your iPod/iPhone will be automatically turned on and start recharging.

2. Press **FUNCTION** on the remote control or **FUNC.** on the unit to select USB function. You can operate your iPod/iPhone through an iPod/iPhone's display by using the remote control and controlling your iPod/iPhone.

To	Do this	
	ON UNIT	ON REMOTE
Pause or restart	>II ST./MO.	►/II
Skip	I<</>>I	I◄◄/►►I
Search	Press and hold I<</>>I	Press and hold I◄◄/►►I
Move to the Previous menu	-	REPEAT (MENU)
Move to the desired item	-	PRESET· FOLDER ∧/∨
Choose an item	□	■ ENTER

Compatible iPod/iPhone

The unit supports the models as follows.

- iPod touch
- iPod classic
- iPod nano
- iPhone 5
- iPhone 4S
- iPhone 4
- iPhone 3GS
- iPhone 3G

Depending on your iPod/iPhone's software version, you may not control your iPod/iPhone from the unit.

Depending on your iPod/iPhone device, you may not control your iPod/iPhone from the unit.

Note

- If this unit displays an error message "NO USB" follow check procedure below.
  - Your iPod/iPhone is not connected firmly.
  - This unit recognizes your iPod/iPhone as an unknown device.
  - Your iPod/iPhone is exceptionally low in power.

  ➡ The battery needs to be charged.
  ➡ If you charge the battery while iPod/iPhone is extremely low in power, it may take longer to be charged.
- Depending on your iPod/iPhone's software version, it may not be possible to control your iPod/iPhone from this unit. We recommend installing the latest software version.
- If you use an application, make a call, or send and receive SMS text message, etc. on iPod touch or iPhone, disconnect it from this unit and then use it.
- If you have a problem with your iPod/iPhone, please visit www.apple.com/support.
- You may need additional operation for iPod touch or iPhone, for example "unlock" by draging the slider.

Recording to USB

You can record various sound sources to USB.

1. Connect the USB device to the unit.
2. Select a function by pressing **FUNCTION** on the remote control or **FUNC.** on the unit.

   One track/file recording - You can record to USB after playing a track/file you want.

   All tracks/files recording - You can record to USB after stop.

   Program list recording - After showing the programmed list, you can record it to USB. (Refer to the page 17)
3. Start the recording by pressing **USB REC** on the remote control or **USB REC.** on the unit.
4. To stop recording, press ■ **ENTER** on the remote control or □ on the unit.

Pausing recording

During recording, press **USB REC** on the remote control or **USB REC.** on the unit to pause recording. Press it again to restart recording. (Only Radio/AUX)

To select recording bit rate and speed

1. Press **USB REC** on the remote control or **USB REC.** on the unit for longer than 3 seconds.
2. Use ⏮/⏭ on the remote control or ⏮ / ⏭ on the unit to select the bit rate.
3. Press **USB REC** on the remote control or **USB REC.** on the unit again to select the recording speed.
4. Press ⏮/⏭ on the remote control or ⏮ / ⏭ on the unit to select a desired recording speed : (AUDIO CD only)

   X1 SPEED
   - You can listen to music while recording it.

   X2 SPEED
   - You can just record the music file.
5. Press **USB REC** on the remote control or **USB REC.** on the unit to finish the setting.

Note

- You can check the recording percentage rate for the USB record on the display window during the recording. (MP3/WMA CD Only)
- During recording MP3/WMA, there is no sound.
- When you stop recording during playback, the file that has been recorded at that time will be stored. (Except MP3/WMA files)
- Do not remove the USB device or turn off the unit during USB recording. If not, an incomplete file may be made and not deleted on PC.
- If USB recording does not work, the message like "NO USB", "ERROR", "FULL" or "NO REC" is displayed on the display window.
- Multi card reader device or External HDD can not be used for USB recording.
- A file is recorded by about 512 Mbyte when you record for a long term.
- You may not store more than 999 files.
- It'll be stored as follows.

AUDIO CD	MP3/WMA	The other source*
CD_REC TRK_001 TRK_002	FILE_REC ABC(File name) DEF(File name)	EXT_REC AUDIO_001 AUDIO_002

* : TUNER, AUX and the like.

The making of unauthorized copies of copy-protected material, including computer programs, files, broadcasts and sound recordings, may be an infringement of copyrights and constitute a criminal offense. This equipment should not be used for such purposes.

Be responsible
Respect copyrights

Troubleshooting

Problem	Cause & Correction
No Power.	• The power cord is not plugged in. Plug in the power cord. • Check whether electricity failed.Check the condition by operating other electronic devices.
No sound.	• Check whether you select a right function. Press **FUNC.** and check the selected function. • Speaker cables are not connected correctly. Connect speaker cables correctly.
The unit does not start playback.	• An unplayable disc is inserted. Insert a playable disc. • No disc is inserted. Insert a disc. • The disc is dirty. Clean the disc. (Refer to the 27 page) • The disc is inserted upside down. Place the disc with the label or printed side facing upwards.
Radio stations cannot be tuned in properly.	• The antenna is positioned or connected poorly. Connect the antenna securely. • The signal strength of the radio station is too weak. Tune to the station manually. • No stations have been preset or preset stations have been cleared (when being tuned by scanning preset channels). Preset some radio stations, see page 19 for details.
The remote control does not work properly.	• The remote control is too far from the unit. Operate the remote control within about 23 ft (7 m). • There is an obstacle in the path of the remote control and the unit. Remove the obstacle. • The batteries in the remote control are exhausted. Replace the batteries with new ones.
iPod/iPhone does not work.	• Check whether the player is connected to the unit correctly. Connect it to the unit correctly.

Specifications

General				
Model	CM4630	CM4530	CM4430	CM4330
Power requirements	Refer to the main label.			
Power consumption	Refer to the main label.			
Dimensions (W x H x D)	202 x 307 x 315 mm			
Net Weight (Approx.)	3.15 kg			
Operating temperature	5 °C to 35 °C (41 °F to 95 °F)			
Operating humidity	5 % to 90 %			
Bus Power Supply	DC 5 V ⎓ 1 A			

Inputs	
AUX IN	2.0 Vrms (1 kHz, 0 dB), 75 Ω, RCA jack (L, R) x 1

Tuner	
FM Tuning Range	87.5 to 108.0 MHz or 87.50 to 108.00 MHz

Amplifier					
Model		CM4630	CM4530	CM4430	CM4330
Stereo mode		250 W + 250 W (3 Ω at 1 KHz, THD 10 %)	160 W + 160 W (4 Ω at 1 KHz, THD 10 %)	150 W + 150 W (4 Ω at 1 KHz, THD 10 %)	90 W + 90 W (4 Ω at 1 KHz, THD 10 %)
Surround mode	Front	250 W + 250 W (3 Ω at 1 KHz, THD 10 %)	160 W + 160 W (4 Ω at 1 KHz, THD 10 %)	150 W + 150 W (4 Ω at 1 KHz, THD 10 %)	90 W + 90 W (4 Ω at 1 KHz, THD 10 %)
	Subwoofer	-	180 W (3 Ω at 1 KHz, THD 10 %)	-	-

CD	
Frequency Response	100 to 20 000 Hz
Signal-to-noise ratio	75 dB
Dynamic range	80 dB

Speaker specifications

Front speaker				
Model	CMS4630F	CMS4530F (CM4530)	CMS4530F (CM4430)	CMS4330F
Type	2 Way 2 Speaker			
Impedance	3 Ω	4 Ω		
Rated Input Power	250 W	160 W	150 W	90 W
Max. Input power	500 W	320 W	300 W	180 W
Net Dimensions (W x H x D)	245 x 452 x 275 mm	232 x 352 x 262 mm	232 x 352 x 262 mm	204 x 301 x 235 mm
Net Weight	5.55 kg	3.32 Kg	3.32 Kg	2.48 Kg

Subwoofer speaker	
Model	CMS4530W
Type	1 Way 1 Speaker
Impedance	3 Ω
Rated Input Power	180 W
Max. Input power	360 W
Net Dimensions (W x H x D)	250 x 352 x 327 mm
Net Weight	5.58 kg

- Design and specifications are subject to change without notice.

Maintenance

Handling the Unit

When shipping the unit

Please save the original shipping carton and packing materials. If you need to ship the unit, for maximum protection, re-pack the unit as it was originally packed at the factory.

Keeping the exterior surfaces clean

Do not use volatile liquids such as insecticide spray near the unit.

Wiping with strong pressure may damage the surface.

Do not leave rubber or plastic products in contact with the unit for a long period of time.

Cleaning the unit

To clean the player, use a soft, dry cloth. If the surfaces are extremely dirty, use a soft cloth lightly moistened with a mild detergent solution. Do not use strong solvents such as alcohol, benzine, or thinner, as these might damage the surface of the unit.

Maintaining the Unit

The unit is a high-tech, precision device. If the optical pick-up lens and disc drive parts are dirty or worn, the picture quality could be diminished. For details, please contact your nearest authorized service center.

Notes on Discs

Handling Discs

Never stick paper or tape on the disc.

Storing Discs

After playing, store the disc in its case. Do not expose the disc to direct sunlight or sources of heat and never leave it in a parked car exposed to direct sunlight.

Cleaning Discs

Do not use strong solvents such as alcohol, benzine, thinner, commercially available cleaners, or anti-static spray intended for old vinyl records.

Trademarks and Licenses

Plays Windows Media™

R·D·S

Made for iPod iPhone

"Made for iPod," and "Made for iPhone" mean that an electronic accessory has been designed to connect specifically to iPod or iPhone, respectively, and has been certified by the developer to meet Apple performance standards. Apple is not responsible for the operation of this device or its compliance with safety and regulatory standards. Please note that the use of this accessory with iPod or iPhone may affect wireless performance.



Technology with the human touch

GUARANTEE

- LG Electronics U.K. Ltd. will provide the following services in order toexpedite this Guarantee.

1. All faulty components which fail due to defective manufacture will be replaced free of charge for a period of 12 months from the original date of purchase.
2. The dealer (or his service agent) who sold the product will be reimbursed for any labour provided in the repair of this LG equipment, for a period of 12 months from the original date of purchase. These claims must be made in accordance with the published scale of service charges and relevant claims procedure.

PLEASE NOTE:

A. The dealer may restrict the guarantee to the original purchaser.

B. The dealer is not obliged to carry out service under guarantee if unauthorized modifications are made to the apparatus, or if non standard components are used or if the serial number of the apparatus is removed, defaced, misused, or altered.

C. Any claims made under guarantee must be directed to the dealer from whom the equipment was originally purchased. The dealer may, before carrying out service under guarantee, require a receipted account as evidence of the date of purchase.

D. We respectfully point out that your dealer is not obligated to replace batteries if they become exhausted or worn in use.

E. Aerial alignment and consumer control adjustments are not covered by this guarantee.

This guarantee does not affect your statutory rights.

- REQUIREMENTS TO MAINTAIN WARRANTY COVERAGE:
  RETAIN YOUR RECEIPT TO PROVE DATE OF PURCHASE. A COPY OF YOUR RECEIPT MUST BE SURRENDERED AT THE TIME GUARANTEE SERVICE IS PROVED.
- Product Registration Card :
  It is helpful to complete at least your name, address, phone, model & serial numbers and return it. This will enable LG to assist you in the future should you lose your receipt, your units be stolen, or should modifications be necessary.
- To obtain information or assistance: Call 0870 873 5454 Monday-Friday 9.00am-4.30pm

MODEL NO.*	SERIAL NO.*	DATE OF PURCHASE.*

In all cases of difficulty - consult your LG dealer from whom the product was purchased

LGEUK Website : www.lge.co.uk
(service website : www.lgelectronics.co.uk)

CM4430-DE_DGBRLLK_ENG_4223.indd 31 2013-01-31 2:50:30



CM4430-DE_DGBRLLK_ENG_4223.indd 32 2013-01-31 2:50:31