LG
Life's Good

ENGLISH

OWNER'S MANUAL

MONITOR SIGNAGE

Please read this manual carefully before operating the your set and retain it for future reference.

MONITOR SIGNAGE MODEL

47VL10

www.lg.com

ENGLISH

TABLE OF CONTENTS

3 LICENSES

4 ASSEMBLING AND PREPARING

4 Accessories
5 Optional Accessories
6 Parts and buttons
7 Connecting the stand
7 Connecting the Speakers
8 Cable Management
9 Connecting stand hole cover
9 To install Portrait
10 Installing on a wall

11 REMOTE CONTROL

12 USING THE MONITOR SET

12 Connecting to a PC
12 - Using the input list
13 - RGB connection
13 - HDMI/DVI connection
14 - HDMI connection
14 - LAN connection

15 CUSTOMIZING SETTINGS

15 Accessing main menus
16 - PICTURE settings
20 - AUDIO settings
21 - TIME settings
22 - OPTION settings
25 - INFORMATION settings

26 MAKING CONNECTIONS

27 Connecting to a HD receiver, DVD, Camcorder, Camera, Gaming Device or VCR player
27 - HDMI connection
27 - HDMI/DVI connection
28 - AV(CVBS) connection

29 TROUBLESHOOTING

32 SPECIFICATIONS

35 RS-232C

35 Connecting the cable
35 RS-232C Configurations
35 Communication Parameter
36 Command reference list
38 Transmission / Receiving protocol
47 IR CODES

LICENSES

Supported licenses may differ by model. For more information of the licenses, visit www.lg.com.

The terms HDMI and HDMI High-Definition Multimedia Interface, and the HDMI logo are trademarks or registered trademarks of HDMI Licensing LLC in the United States and other countries.

ENGLISH

ASSEMBLING AND PREPARING

Accessories

Check your product box for the following items. If there are any missing accessories, contact the local dealer where you purchased your product. The illustrations in this manual may differ from the actual product and accessories.

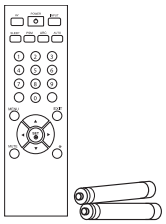

Remote control and Batteries

Power Cord

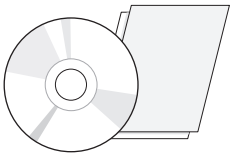

User Manual/Card

15-pin D-SUB Signal Cable

CAUTION

- Do not use any pirated items to ensure the safety and product life span.
- Any damages or injuries by using pirated items are not covered by the warranty.

NOTE

- The accessories supplied with your product may vary depending on the model.
- Product specifications or contents in this manual may be changed without prior notice due to upgrade of product functions.

Optional Accessories

Without prior notice, optional accessories are subject to change to improve the performance of the product, and new accessories may be added. The illustrations in this manual may differ from the actual product and accessories.

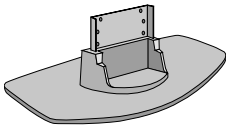

Stand

Screws

cable management

Stand kit

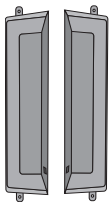

Speaker

Screws/Cable

Cable holder/
Cable Tie

Speaker kit

Stand hole cover

Screws

Stand hole cover kit

NOTE

- Cable holder/Cable tie may not be available in some areas or for some models.
- Optional accessories are not included for all models.

ENGLISH

Parts and buttons

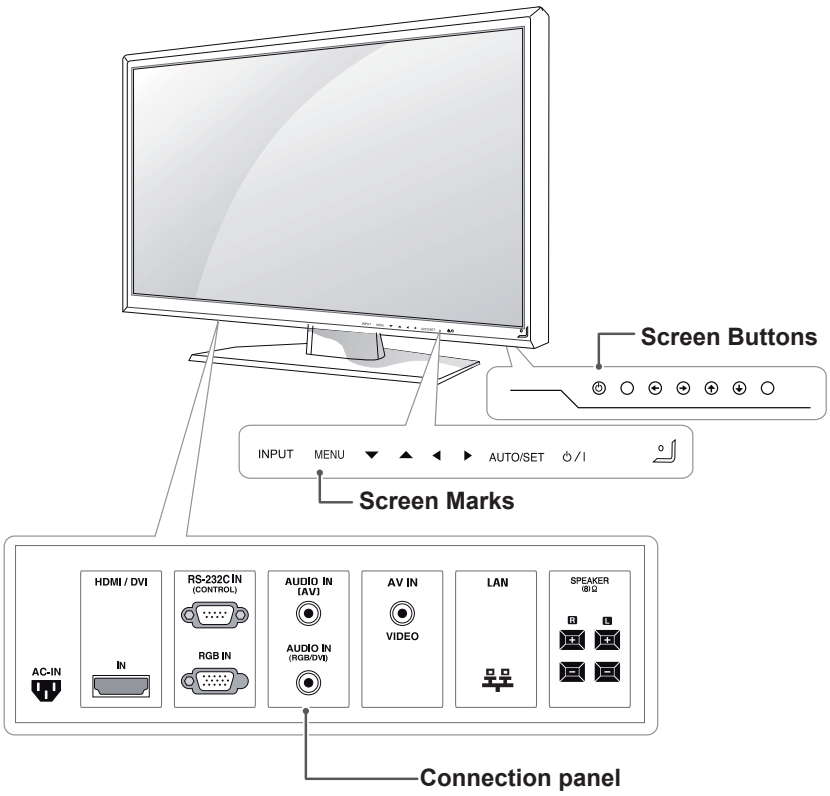

Screen Marks	Description
INPUT	Changes the input source.
MENU	Accesses the main menus, or saves your input and exits the menus.
▼▲	Adjust the up and down.
◄ ►	Adjusts the volume level.
AUTO/SET	For optimal screen display, automatically adjusts screen resolution.
⏻ / I	Turns the power on or off.
IR Receiver	This is where the unit receives signals from the remote control.
Power Indicator	This Indicator lights up blue when the display operates normally(on mode). If the display is in sleep (Energy Saving) mode, this indicator color changes to amber.

NOTE

- You can set the Power indicator to on or off by selecting **OPTION** in the main menus.

Connecting the stand

- Only on some models.

1 Take the parts for the stand out of the box and assemble them as shown in the picture.

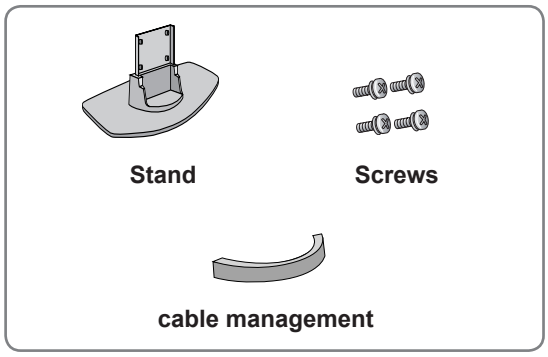

2 Place a soft cloth on the table and put the product with the screen facing downward. Connect the stand as shown in the following picture.

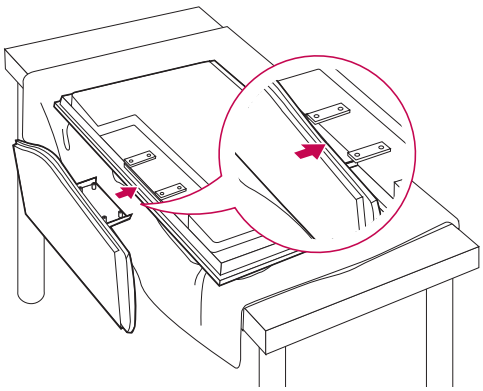

3 Use the screws to secure the stand on the rear side of the product as shown in the diagram.

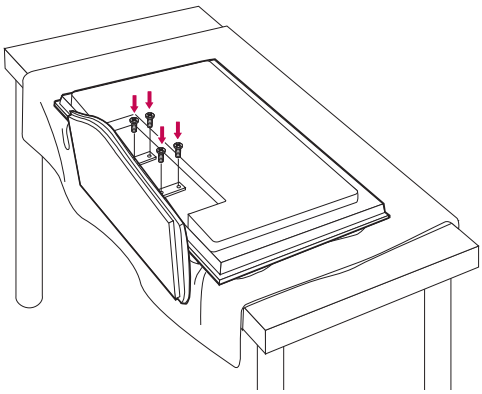

Connecting the Speakers

- Only on some models.

1 Mount the product onto the speaker by using a screw as shown in the following connect the speaker cable.

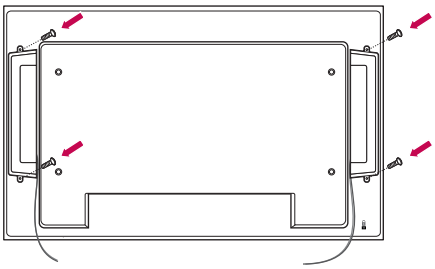

2 After installing your speakers, use holders and cable ties to organize the speaker cables. (This feature is not available in all model.)

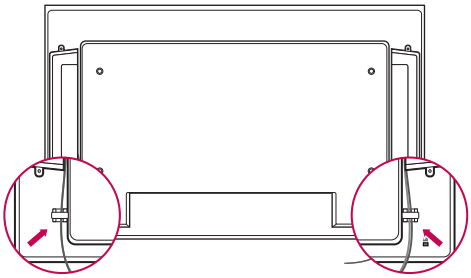

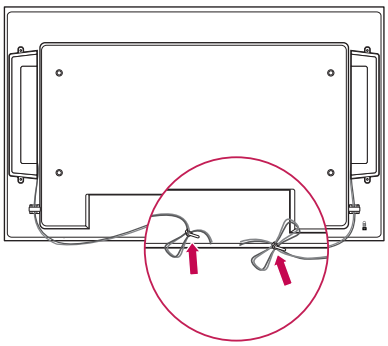

NOTE

- Connect the speaker terminals noting the correct polarity.

Cable Management

- Only on some models.

1 Arrange the cables in the center as shown in the following picture.

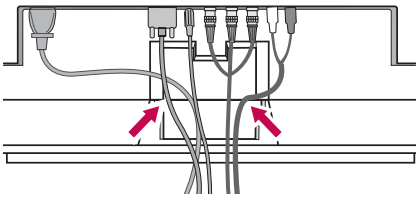

2 Fit the cable management to the back to help manage the cables.

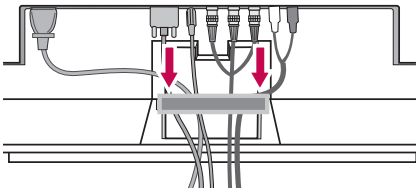

3 For removing the cable management, hold the Cable management with both hands and pull it downward.

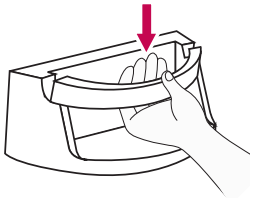

NOTE

- Do not use the cable management as a handle for the Monitor.
- The illustrations in this manual may differ from actual cable interfaces.

Using the Kensington security system

The Kensington security system connector is located at the back of the Monitor set. For more information of installation and using, refer to the manual supplied with the Kensington security system or visit *http://www.kensington.com*.

Connect the Kensington security system cable between the Monitor set and a table.

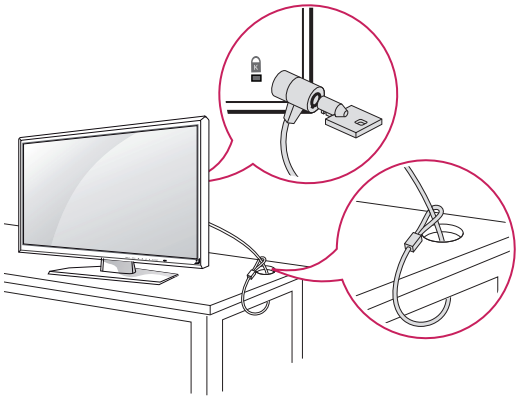

NOTE

- The Kensington security system is optional. You can obtain additional accessories from most electronics stores.

Connecting stand hole cover

- Only on some models.

1 Take the parts for the stand out of the box and assemble them as shown in the picture.

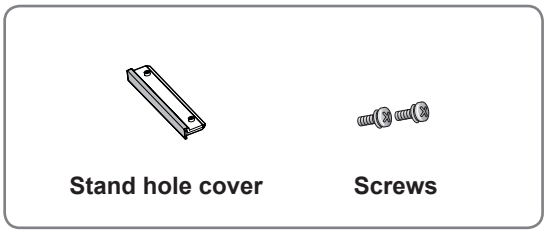

2 Place a soft cloth on the table and put the product with the screen facing downward. Connect the stand hole cover as shown in the following picture.

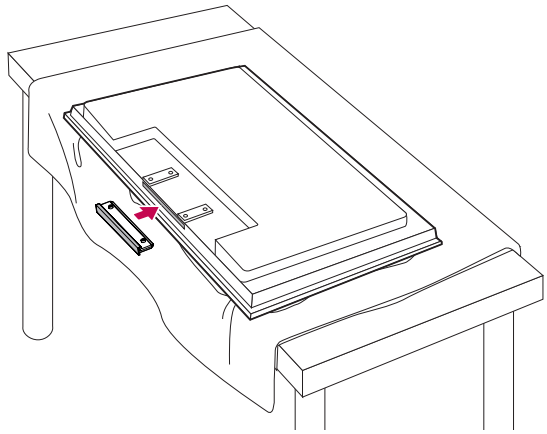

3 Use the screws to secure the stand hole cover on the rear side of the product as shown in the diagram.

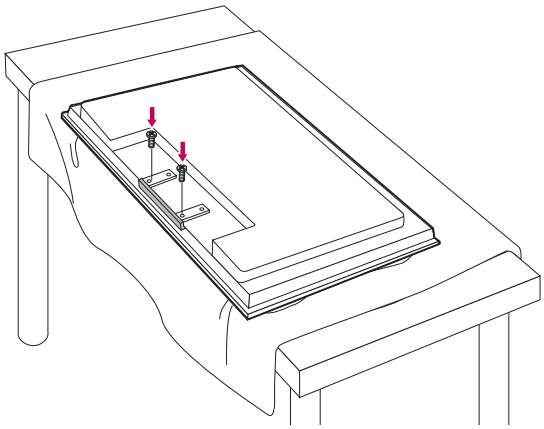

To install Portrait

- Only on some models.

When installing Portrait, rotate it clockwise based on its front.

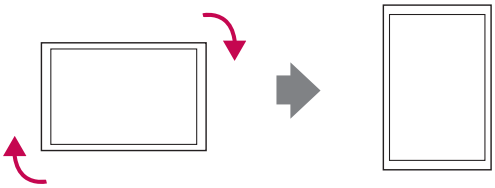

NOTE

- When using the wall mounting bracket or the portrait scene mode, the opening can be covered by the stand hole cover.

Installing on a wall

Install the monitor at least 10 cm away from the wall and leave about 10 cm of space at each side of the monitor to ensure sufficient ventilation. Detailed installation instructions can be obtained from your local retail store. Please refer to the manual to install and set up a tilting wall mounting bracket.

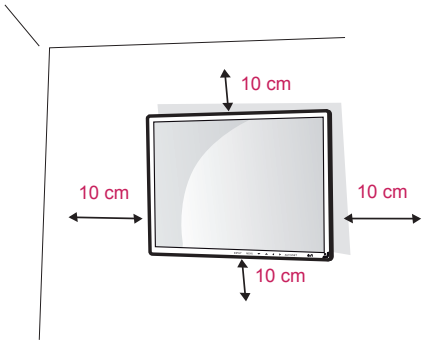

If you want to mount the monitor on the wall (optional), attach the wall mounting bracket to the rear of the monitor.
Make sure that the wall mounting bracket is securely fixed to the monitor and to the wall.
Use the wall mount plate and screws that comply with the VESA standard as specified below.

- 785mm(31 inch) or greater
  * Fastening screw: Diameter 6.0 mm x Pitch 1.0 mm x Length 10 mm
  (32 inch is Diameter 4.0 mm x Pitch 0.7 mm x Length 10 mm)

CAUTION

- Disconnect the power cord first, and then move or install the Monitor set. Otherwise electric shock may occur.
- If you install the Monitor set on a ceiling or slanted wall, it may fall and result in severe injury. Use an authorized LG wall mount and contact the local dealer or qualified personnel.
- Do not over tighten the screws as this may cause damage to the Monitor set and void your warranty.
- Use the screws and wall mounts that meet the VESA standard. Any damages or injuries by misuse or using an improper accessory are not covered by the warranty.

NOTE

- Use the screws that are listed on the VESA standard screw specifications.
- The wall mount kit includes an installation manual and necessary parts.
- The wall mount bracket is optional. You can obtain additional accessories from your local dealer.
- The length of screws may differ depending on the wall mount. Be sure to use the proper length.
- For more information, refer to the instructions supplied with the wall mount.

REMOTE CONTROL

The descriptions in this manual are based on the buttons of the remote control. Please read this manual carefully and use the Monitor set correctly.
To replace batteries, open the battery cover, replace batteries (1.5 V AAA) matching ⊕ and ⊖ ends to the label inside the compartment, and close the battery cover. To remove the batteries, perform the installation actions in reverse.

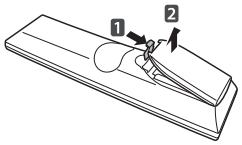

CAUTION

- Do not mix old and new batteries, as this may damage the remote control.

Make sure to point the remote control to the remote control sensor on the Monitor set.

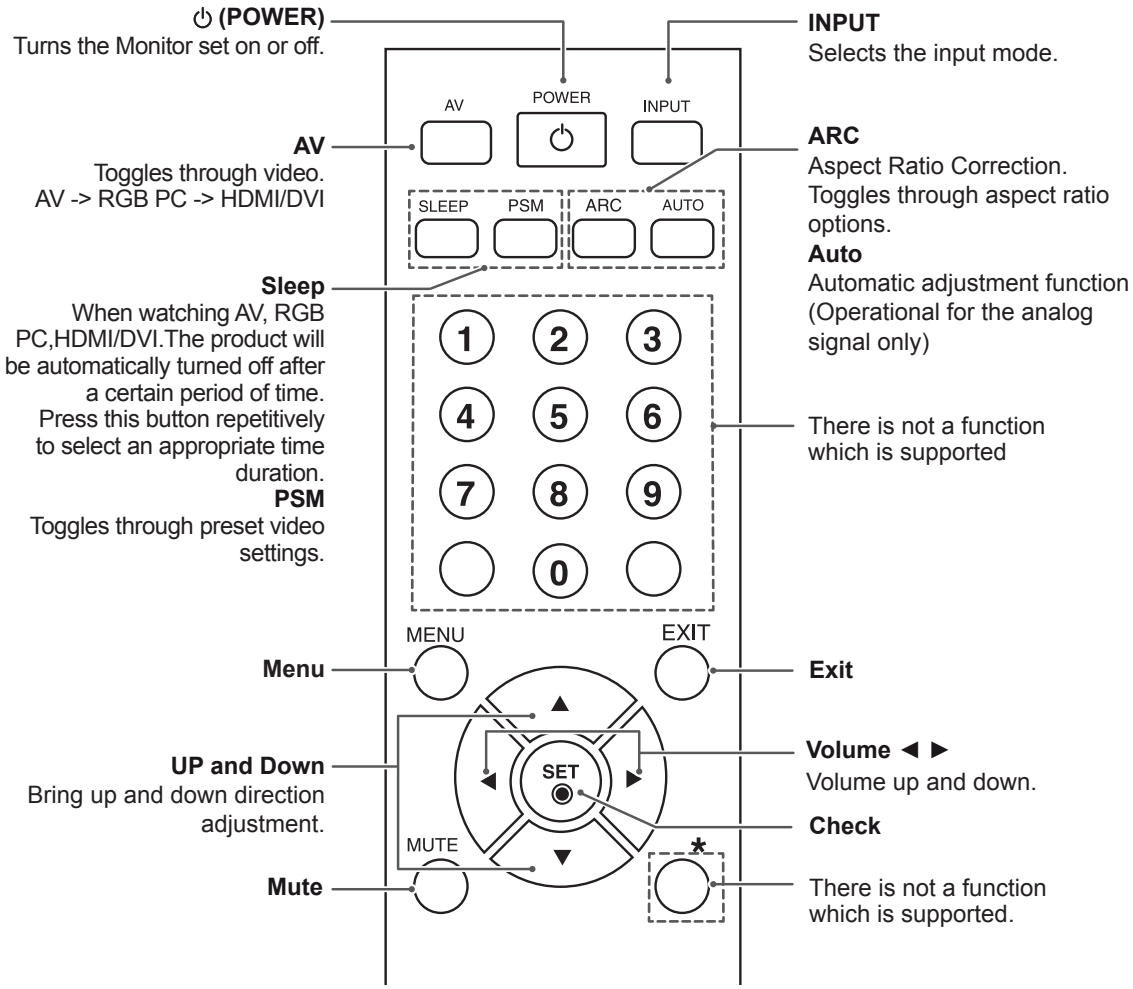

ENGLISH

USING THE MONITOR SET

Connecting to a PC

Your Monitor set supports the Plug & Play* feature .

* Plug & Play: The function when a PC recognizes a connected device that users connect to a PC and turn on, without device configuration or user intervention.

NOTE

- It is recommended to use the Monitor set with the HDMI connection for the best image quality.
- Use a shielded signal interface cable, such as D-sub 15 pin signal cable and DVI/HDMI cable, with a ferrite core to maintain standard compliance for the product.
- If you turn the Monitor set on when the set becomes cold, the screen may flicker. This is normal.
- Some red, green, or blue spots may appear on the screen. This is normal.

CAUTION

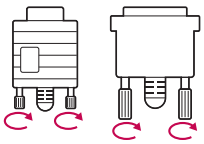

- Connect the signal input cable and tighten it by turning the screws clockwise.

- Do not press the screen with your finger for a long time as this may result in temporary distortion on the screen.
- Avoid displaying a fixed image on the screen for a long period of time to prevent image burn. Use a screensaver if possible.

Using the input list

Selecting an input source

1 Press **INPUT** to access the input source list.
- The connected device displays on each input source.

2 Press the Navigation buttons to scroll to one of the input sources and press **OK**.

Input source	Description
AV	Watch the contents in a VCR or other external devices
RGB-PC	View a PC display on the screen
HDMI/DVI	Watch contents in a PC, DVD or Digital settop box other high definition devices

RGB connection

Transmits the analog video signal from your PC to the Monitor set. Connect the PC and the Monitor set with the D-sub 15 pin cable as shown the following illustrations.
Select RGB input source.

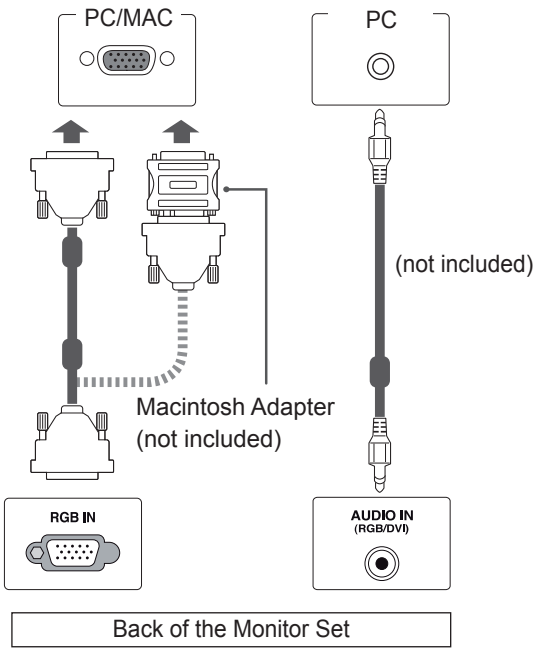

HDMI/DVI connection

Transmits the digital video signal from your PC to the Monitor set. Connect the PC and the Monitor set with the HDMI/DVI cable as shown the following illustrations.
Select HDMI/DVI input source.

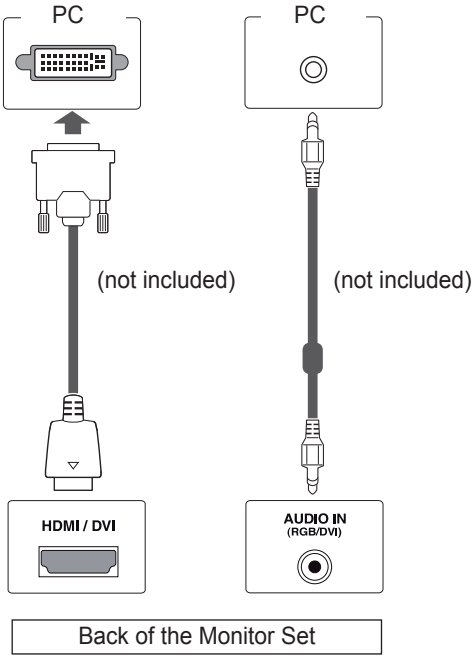

NOTE

- Use the standard Macintosh adapter since an incompatible adapter is available in the market. (Different signaling system)

NOTE

- When HDMI PC is used, a compatiblity problem might occur.

HDMI connection

Transmits the digital video and audio signals from your PC to the Monitor set. Connect the PC and the Monitor set with the HDMI cable as shown in the following illustrations.
Select HDMI/DVI input source.

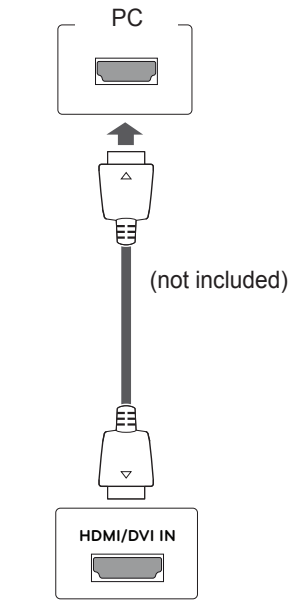

Back of the Monitor Set

NOTE

- Use a High Speed HDMI™ Cable.
- Please check the PC environment if you cannot hear the sound in HDMI mode.
- If you want to use HDMI-PC mode, you must set the input label to PC mode.

LAN connection

Connect the LAN cable and install the eZ-Net Manager program on the CD-ROM.
For more information about the program, please refer to eZ-Net Guide in the enclosed CD-ROM.

A Connect PC to Monitor directly.

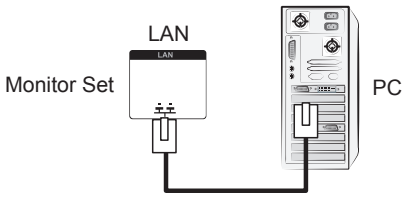

B Using a router(Switch)

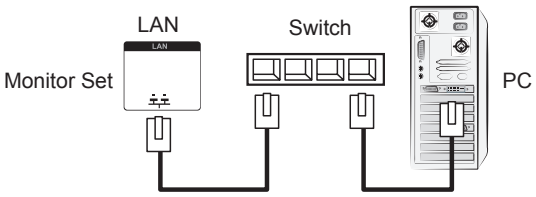

C Using the Internet.

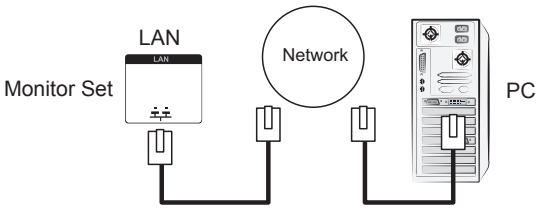

NOTE

- Using LAN establishes communication between your PC and the monitor and enables to use the OSD menus on the PC as well as on the monitor.

CUSTOMIZING SETTINGS

Accessing main menus

1 Press **MENU** to access the main menus.

2 Press the Navigation buttons to scroll to one of the following menus and press **SET**.

3 Press the Navigation buttons to scroll to the setting or option you want and press **SET**.

4 When you are finished, press **EXIT**.

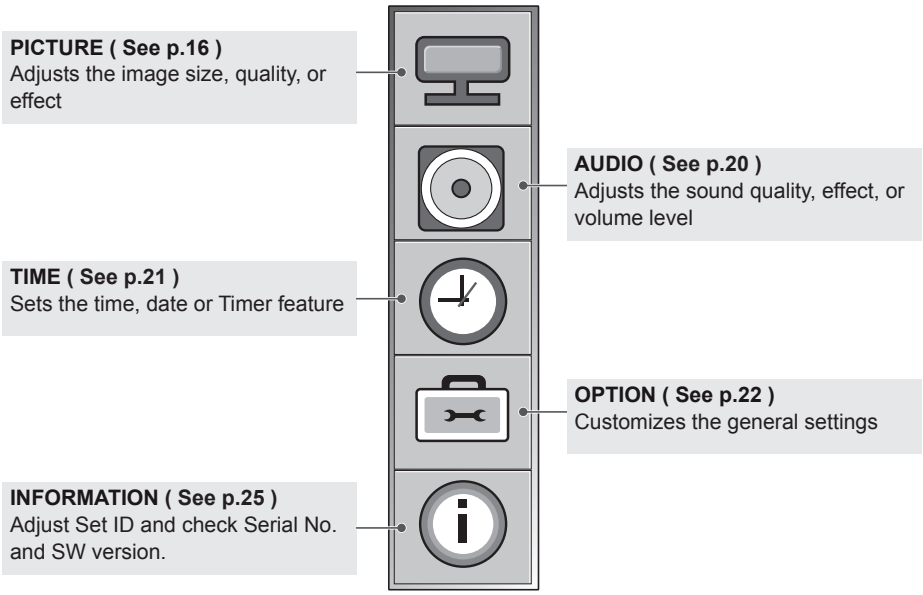

ENGLISH

PICTURE settings

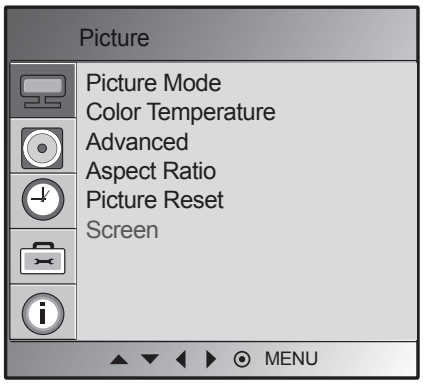

1 Press **MENU** to access the main menus.

2 Press the Navigation buttons to scroll to **PICTURE** and press **SET**.

3 Press the Navigation buttons to scroll to the setting or option you want and press **SET**.

- To return to the previous level, press ◀.

4 When you are finished, press **EXIT**.

The available picture settings are described in the following:

Setting	Description	
Picture Mode	Selects one of the preset image or customizes options in each mode for the best Monitor set screen performance. You are also able to customize advanced options of each mode. The available preset picture modes vary depending on the Monitor set .	
	Mode	
	Vivid	Adjusts the video image for the retail environment by enhancing the contrast, brightness, Colour, and sharpness.
	Standard	Adjusts the image for the normal environment.
	Cinema	Optimizes the video image for a cinematic look to enjoy movies as if you are in a movie theater.
	Sport	Optimizes the video image for high and dynamic actions by emphasizing primary Colours such as white, grass, or sky blue.
	Game	Optimizes the video image for a fast gaming screen such as PCs or games.
	User 1,2	Adjusts the detailed video image settings for video experts as well as general viewers.
	Backlight	Adjusts the brightness of the screen by controlling the LCD backlight. If you decrease the brightness level, the screen becomes darker and the power consumption will be reduced without any video signal loss.
	Contrast	Increases or decreases the gradient of the video signal. You may use Contrast when the bright part of the picture is saturated.
	Brightness	Adjusts the base level of the signal in the picture. You may use Brightness when the dark part of the picture is saturated.
	Color	Adjusts intensity of all Colors.
	Sharpness	Adjusts the level of clearness of the picture. The lower the level, the softer the image.
	Tint	Adjusts the balance between red and green levels.
	Expert	To compensate for each image mode, or adjust image values according to a particular image. (Applied only to User2 menu.) (Function works in the following mode - AV, HDMI-DTV)
	NOTE • If the '**Picture Mode**' setting in the Picture menu is set to **Vivid, Standard, Cinema, Sport** or **Game** the subsequent menus will be automatically set. • You cannot adjust colour and tint in the RGB-PC / HDMI-PC mode. • When the User 1,2 is selected, you can select **Backlight, Contrast, Brightness, Color, Sharpness, Tint** or **Expert**.	

Setting	Description	
Color Temperature	Color Settings	
	Option	
	Cool	Sets the screen color to a bluish tone.
	Medium	Sets the screen to the standard color.
	Warm	Sets the screen color to a reddish tone.
	User	Select this option to use the user-defined settings.
Advanced	Gamma (Low/Medium/High)	You can adjust brightness of dark area and middle gray level area of the picture. » Low: Make dark and middle gray level area of the picture brighter. » Medium: Express original picture levels. » High: Make dark and middle gray level area of the picture darker.
	Film Mode (On/Off)	You can watch a cinema-like video by eliminating judder effect. Use this function when you watch movies.
	Black Level (Low/High)	» Low: The picture of the screen gets darker. » High: The picture of the screen gets brighter. Set black level of the screen to proper level. This function enables to select 'Low' or 'High' in the following mode: AV, HDMI-DTV. * This is available in AV,HDMI-DTV.
	NR (Off/Low/High/ Adaptive)	Reduces screen noise without compromising video quality.
Aspect Ratio	Changes the image size to view images at its optimal size.	
Picture Reset	Return Picture Mode, Color Temperature, Advanced, Aspect Ratio to the default factory settings.	
SCREEN (In RGB)	Customizes the PC display options in RGB mode.	
	Option	
	Auto Config. (RGB PC input only)	This button is for the automatic adjustment of the screen position, clock and phase. This function is available for analog signals only. * Phase, Clock function are not available in HDMI/DVI DTV.
	Manual Config.	If the picture isn't clear after auto adjustment and characters are still trembling, adjust the picture phase manually. * Phase, Clock function are not available in HDMI/DVI DTV. Phase : To adjust the focus of the display. This item allows you to remove any horizontal noise and clear or sharpen the image of characters. This function is available for analog signals only. Clock : To minimize any vertical bars or stripes visible on the screen background. The horizontal screen size will also change. This function is available for analog signals only. H-Position : Moving the screen position horizontally. V-Position : Moving the screen position vertically. H-Size : Adjust the horizontal size of the screen. V-Size : Adjust the vertical size of the screen.
	XGA Mode (RGB-PC only)	For more improved or better picture quality, select the same mode corresponding to computer resolution.
	Reset	Return Manual config. and XGA Mode to the default factory settings.

ENGLISH

Aspect Ratio

Resize the image to view the image at its optimal size by pressing **ARC** button while you are watching Monitor set.

CAUTION

- If a fixed image displays on the screen for a long period of time, it will be imprinted and become a permanent disfigurement on the screen. This is “image burn” or “burn-in” and not covered by the warranty.
- If the aspect ratio is set to 4:3 for a long period of time, image burn may occur on the letterboxed area of the screen.

NOTE

- You can also change the image size by accessing the main menus.

- **16:9** : The following selection will allow you to adjust the picture horizontally, in linear proportion, to fill the entire screen(useful for viewing 4:3 formatted DVDs).

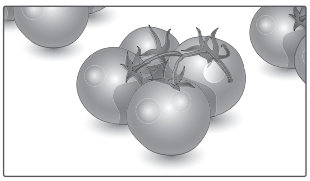

- **Just Scan**: Following Selection will lead to you view the picture of best quality without loss of original picture in high resolution image.

* Note: If there is noise in original Picture, You can see the noise at the edge.

- **Original** : The aspect ratio is not adjusted from the original. It is set by the program being watched.

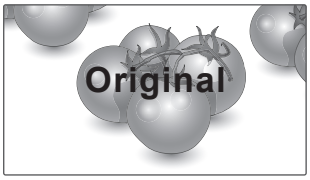

- **4:3** : The following selection will allow you to view a picture with an original 4:3 aspect ratio, gray bars will appear on both the left and right of the screen.

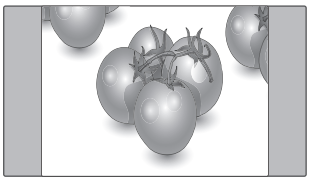

- **1:1** : The aspect ratio is not adjusted from the original. (Only HDMI/DVI PC, RGB PC)

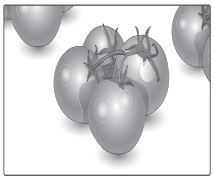

14:9 : You can view a picture format of 14:9 or a general Monitor set programme in the 14:9 mode. The 14:9 screen is viewed in the same way as in 4:3, but is magnified to the left and right.

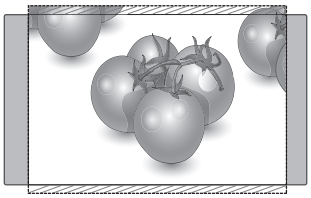

- **Zoom 1,2** : The following selection will allow you to view the picture without any alteration, while filling the entire screen. However, the top and bottom of the picture will be cropped.

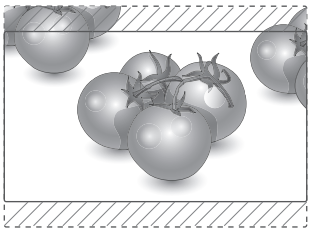

MODE / ARC	AV	HDMI/DVI		RGB
		DTV	PC	PC
16:9	o	o	o	o
Just Scan	x	o	x	x
Original	o	x	x	x
4:3	o	o	o	o
1:1	x	x	o	o
14:9	o	x	x	x
Zoom 1	o	x	x	x
Zoom 2	o	x	x	x

ENGLISH

AUDIO settings

1 Press **MENU** to access the main menus.

2 Press the Navigation buttons to scroll to **AUDIO** and press **SET**.

3 Press the Navigation buttons to scroll to the setting or option you want and press **SET**.

- To return to the previous level, press ◀.

4 When you are finished, press **EXIT**.

The available audio options are described in the following:

Setting	Description	
Sound Mode	Selects one of the preset sound modes or customize each option in each mode.	
	Mode	
	Clear Voice	By differentiating the human sound range from others,it helps users listen to human voices better.
	Standard	Select when you want standard-quality sound.
	Music	Select when you listen to music.
	Cinema	Select when you watch movies.
	Sport	Select when you watch sports events.
	Game	Select when you play games.
	User	Select this option to use the user-defined audio settings.
	NOTE • If sound quality or volume is not at the level you want, it is recommended to use a separate home theater system or amplifier to cope with different user environments.	
Auto Volume	Activates the Auto Volume feature to keep the volume level consistent whenever you change programmes.	
Balance	Adjusts balance between the left and right speakers according to your room environment.	
Speaker	ON: Enables sound to the monitor speaker. (* The monitor speaker is sold separately.) OFF: Disables sound to the monitor speaker. Use this option when using an external sound device.	

TIME settings

1 Press **MENU** to access the main menus.

2 Press the Navigation buttons to scroll to **TIME** and press **SET**.

3 Press the Navigation buttons to scroll to the setting or option you want and press **SET**.

- To return to the previous level, press ◀.

4 When you are finished, press **EXIT**.

The available time settings are described in the following:

Setting	Description
Sleep Timer	Sets the length of time until the Monitor set to turns off. When you turn the Monitor set off and turn it on again, the Sleep Timer will be set to off.
Auto Sleep	If Auto Sleep is active and there is no input signal, the set switches to off mode automatically after 10 minutes.
Power On Delay	When connecting multiple monitors and turning the power on, the monitors are turned on individually to prevent overload.
Power Saving	This screen brightness adjusting menu helps you save energy. Level: Total 4 screen brightness levels are provided. - Off: 100% light - Level 1: 80% light - Level 2: 60 % light - Level 3: 40% light
Automatic Standby	If you do not use the monitor for more than 4 hours, it will be in standby mode automatically.

NOTE

- The Automatic Standby function may not be available depending on the country.

ENGLISH

OPTION settings

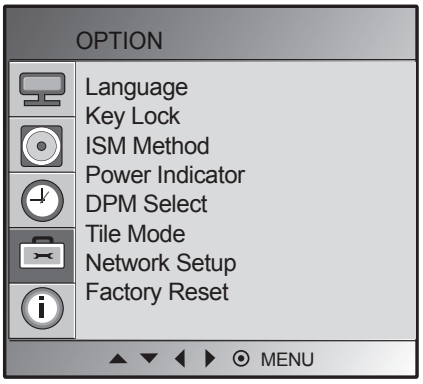

1 Press **MENU** to access the main menus.

2 Press the Navigation buttons to scroll to **OPTION** and press **SET**.

3 Press the Navigation buttons to scroll to the setting or option you want and press **SET**.

- To return to the previous level, press ◀.

4 When you are finished, press **EXIT**.

The available option settings are described in the following:

Setting	Description	
Language	To choose the language in which the control names are displayed.	
Key Lock	Use the buttons to select On or Off. The monitor can be set up so that it can only be used with the remote control. This feature can prevent unauthorized viewing. In order to lock the OSD screen adjustment, set the Key Lock tab to the 'On' position. In order to unlock it, do the following : Push the MENU button on the remote control and set Key Lock to the 'Off' position.	
ISM Method	A frozen or still picture from a PC/Video game displayed on the screen for prolonged periods could result in a ghost image remaining even when you change the image. Avoid allowing a fixed image to remain on the screen for a long period of time.	
	Mode	
	Normal	Leave on normal if you don't foresee image burn in being a problem.
	White wash	White wash fills the screen with solid white. This helps removes permanent images burned into the screen. A permanent image may be impossible to clear entirely with white wash.
	Orbiter	May help prevent ghost images. However, it is best not to allow any fixed image to remain on the screen. To avoid a permanent image on the screen, the screen will move every 2 minutes.
	Inversion	This function inverts the panel color of the screen. The panel color is automatically inverted every 30 minutes.
	Dot Wash	This function moves the black dots of the screen. The black dots is automatically moved every 5 second.
Power Indicator	Use this function to set the power indicator on the front side of the product to On or Off.	
DPM Select	A user can choose to turn the power saving mode on / off.	

Setting	Description	
Tile Mode	To use this function - Must be displayed with various other products. - Must be in a function that can be connected to RGB Cable by distributor and RS-232C. Tile mode and choose Tile alignment and set the ID of the current product to set location. * Only after pressing the SET button the adjustments made to the settings will be saved. - Tile mode : column x row (c = 1, 2, 3, 4,5 r = 1, 2, 3, 4,5) - 5 x 5 available. - Configuration of an integration screen is available as well as configuration of One by one Display.	
	Mode	
	H-Size	Adjust the horizontal size of the screen taking into account the size of the bezel.
	V-Size	Adjust the vertical size of the screen taking into account the size of the bezel.
	H-Position	Moving the screen position horizontally.
	V-Position	Moving the screen position vertically.
	Reset	Function to initialize and release Tile. All Tile setting are released when selecting Tile recall and the screen returns to Full screen.
	Tile ID	Select the location of the Tile by setting an ID.
	Natural	The image is omitted by the distance between the screens to be naturally shown.
Network Setup	- DHCP : Allocates and sets up IP automatically. - Manual : Sets up IP address, Gateway, Subnet Mask, Primary DNS and Secondary DNS. The setup process is complete when you select Execute, and "IP Setup Completed" is displayed at the bottom of the screen. While "Wait for IP Setup" is displayed, you cannot use the local keys and remote control. "Wait for IP Setup" is displayed for up to 40 seconds. * If Network select is set to RS232C.DHCP and Manual are disabled.	
Factory Reset	Select this option to return to the default factory settings.	

ENGLISH

Tile Mode

Configuration of an integration screen is available as well as configuration of One by one Display.

• Off:
When the Tile Mode option is disabled

• 2X1:
When using 2 monitors

• 2X2:
When using 4 monitors

• 3X3:
When using 9 monitors

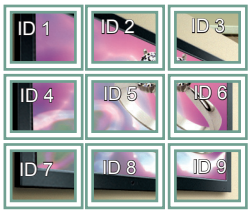

• 4X4:
When using 16 monitors

• 5X5:
When using 25 monitors

Tile Mode – Natural mode

To display the image naturally, the part of the image that would normally be displayed in the gap between the monitors is omitted.

Before

After

INFORMATION settings

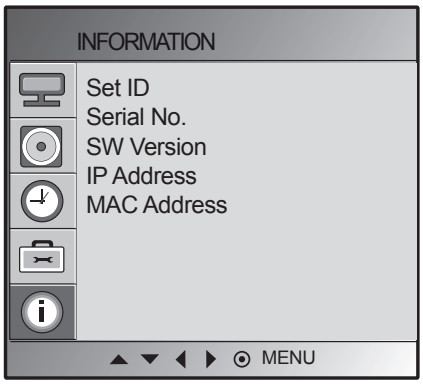

1 Press **MENU** to access the main menus.

2 Press the Navigation buttons to scroll to **OPTION** and press **SET**.

3 Press the Navigation buttons to scroll to the setting or option you want and press **SET**.

- To return to the previous level, press ◀.

4 When you are finished, press **EXIT**.

The available option settings are described in the following:

Setting	Description
Set ID	You can assign a unique Set ID NO (name assignment) to each product when several products are connected for display. Specify the number (1 to 99) using the button and exit. Use the assigned Set ID to individually control each product using the Product Control Program.
Serial No.	This menu shows the serial number of the product.
SW Version	This menu shows the software version.
IP Address	Displays a selected network's IP address.
MAC Address	Displays a selected network's MAC address.

MAKING CONNECTIONS

Connect various external devices to the ports on the Monitor set's back panel.

1 Find an external device you want to connect to your Monitor set shown on the following illustration.

2 Check the connection type of the external device.

3 Go to the appropriate illustration and check the connection details.

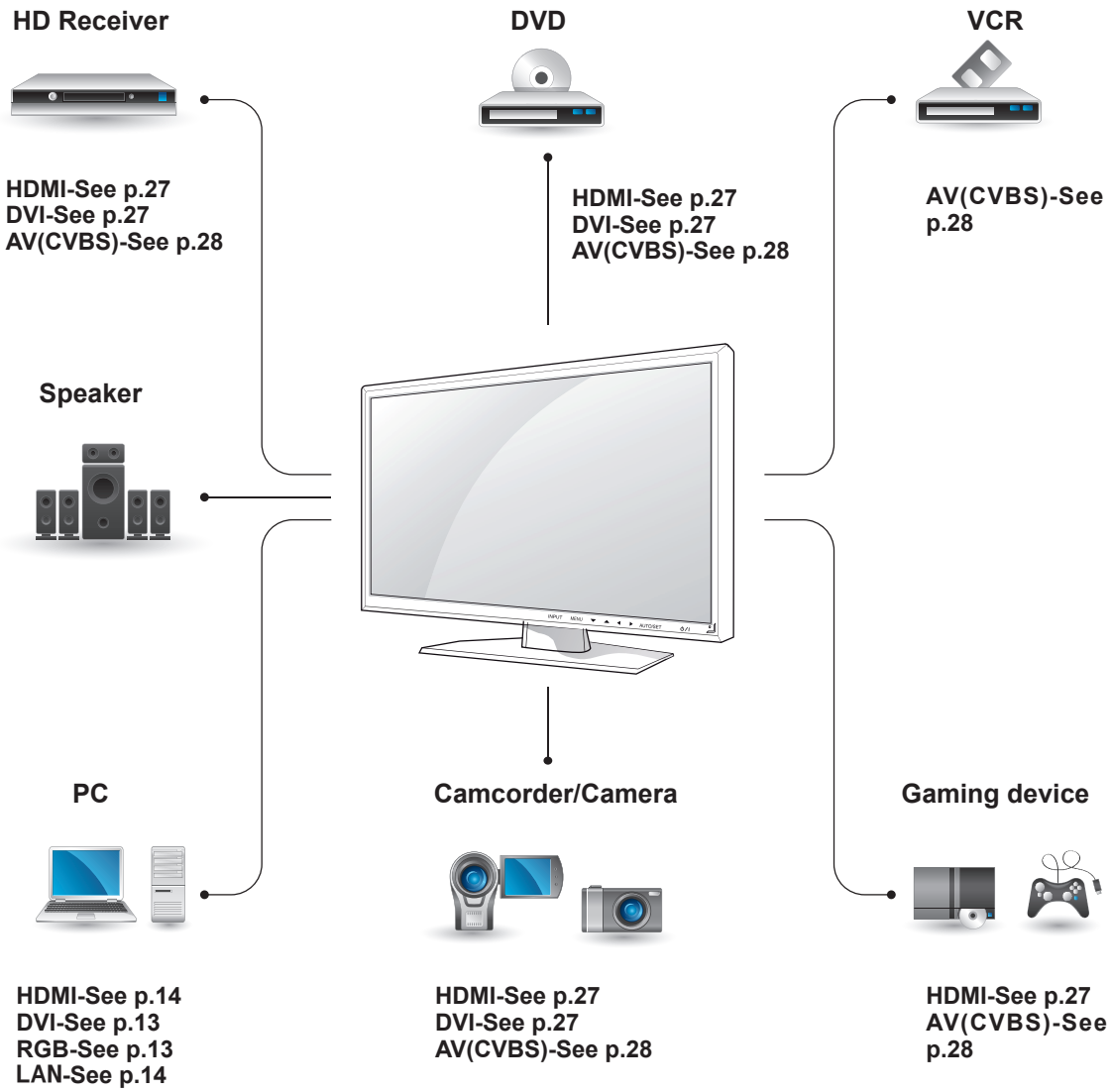

NOTE

- If you connect a gaming device to the Monitor set, use the cable supplied with the gaming device.

Connecting to a HD receiver, DVD, Camcorder, Camera, Gaming Device or VCR player

Connect a HD receiver, DVD, or VCR player to the Monitor set and select an appropriate input mode.

HDMI connection

Transmits the digital video and audio signals from an external device to the Monitor set. Connect the external device and the Monitor set with the HDMI cable as shown on the following illustration.

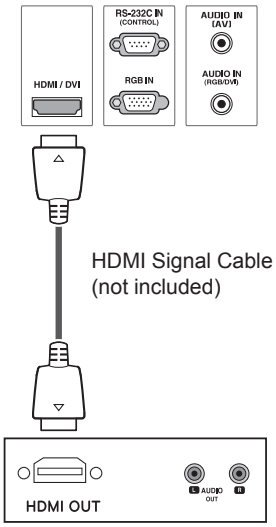

NOTE

- Use a High Speed HDMI™ Cable.

HDMI/DVI connection

Transmits the digital video signal from an external device to the Monitor set. Connect the external device and the Monitor set with the HDMI/DVI cable as shown in the following illustration. To transmit an audio signal, connect an optional audio cable.

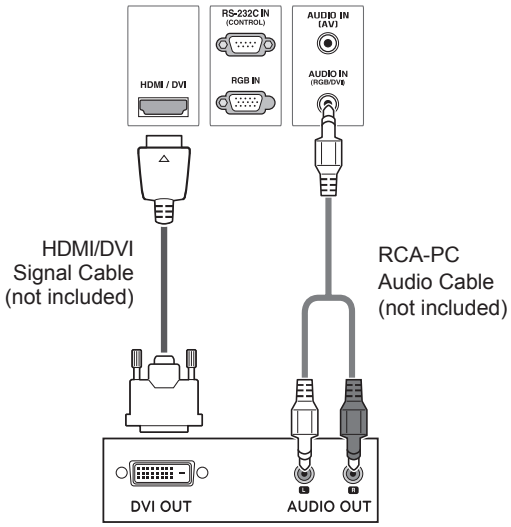

AV(CVBS) connection

Transmits the digital video and audio signals from an external device to the Monitor set. Connect the external device and the Monitor set with the BNC cable as shown on the following illustration.

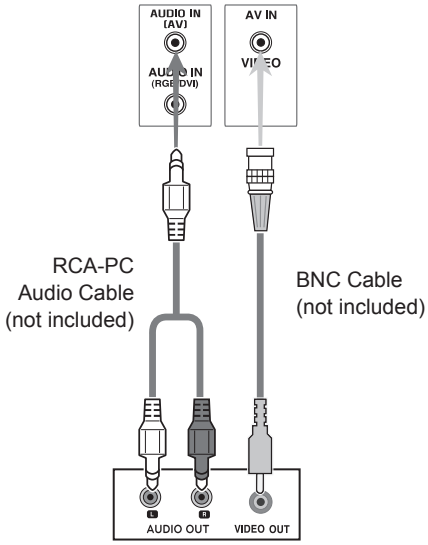

TROUBLESHOOTING

No image is displayed

Problem	Resolution
Is the product power cord connected?	• See if the power cord is properly connected to the outlet.
Is the power indicator light on?	• See if the power switch is turned on. • May need service.
Power is on, power indicator is blue but the screen appears extremely dark.	• Adjust brightness and contrast again. • Backlight may need repair.
The power indicator amber?	• If the product is in power saving mode, move the mouse or press any key. • Turn both devices off and then back on.
Does the 'Out of range' message appear?	• The signal from the PC (video card) is out of the vertical or horizontal frequency range of the product. Adjust the frequency range by referring to the Specifications in this manual. * Maximum resolution RGB : 1920 x 1080 @ 60 Hz HDMI/DVI : 1920 x 1080 @ 60 Hz
Does the 'No signal' message appear?	• The signal cable between PC and product is not connected. Check the signal cable. • Press the 'INPUT' menu in the remote Control to check the input signal.

NOTE

- Vertical frequency: To enable the user to watch the product display, screen image should be changed tens of times every second like a fluorescent lamp. The vertical frequency or refresh rate is the times of image display per second. The unit is Hz.
- Horizontal frequency: The horizontal interval is the time to display one vertical line. When 1 is divided by the horizontal interval, the number of horizontal lines displayed every second can be tabulated as the horizontal frequency. The unit is kHz.

'Unknown Product' message appears when the product is connected.

Problem	Resolution
Did you install the driver?	• Install the product driver, which is provided with the product, or download it from the web site. (http://www.lg.com) • See if the plug&play function is supported by referring to the video card user manual.

'Key Lock On' message appears.

Problem	Resolution
The 'Key Lock On' message appears when pressing the Menu button.	• The Lock function prevents the OSD settings from being changed inadvertently. To release the lock, go to Menu and Option and disable the Key Lock option.

The screen image looks abnormal.

Problem	Resolution
Is the screen position wrong?	• D-Sub analog signal - Press the "AUTO" button in the remote control to automatically select the optimal screen status that fits into the current mode. If adjustment is not satisfactory, use the Position OSD menu. • See if the video card resolution and frequency are supported by the product. If the frequency is out of range, set to the recommended resolution in the Control Panel "Display" Setting menu.
Do thin lines appear on the background screen?	• D-Sub analog signal - Press the "AUTO" button in the remote control to automatically select an optimal screen status that fits into the current mode. If adjustment is not satisfactory, use the Clock OSD menu.
Horizontal noise appears or the characters look blurred.	• D-Sub analog signal - Press the "AUTO" button in the remote control to automatically select an optimal screen status that fits into the current mode. If adjustment is not satisfactory, use the Phase OSD menu.
The screen is displayed abnormally.	• The proper input signal is not connected to the signal port. Connect the signal cable that matches with the source input signal.

After-image appears on the product.

Problem	Resolution
After-image appears when the product is turned off.	• If you use a fixed image for a long time, the pixels may be damaged quickly. Use the screen-saver function.

The audio function does not work.

Problem	Resolution
No sound?	• See if the audio cable is connected properly. • Adjust the volume. • See if the sound is set properly.
Sound is too dull.	• Select the appropriate equalize sound.
Sound is too low.	• Adjust the volume.

Screen color is abnormal.

Problem	Resolution
Screen has poor color resolution (16 colors).	• Set the number of colors to more than 24 bits (true color) Select Control Panel - Display - Settings - Color Table menu in Windows.
Screen color is unstable or mono-colored.	• Check the connection status of the signal cable. Or, re-insert the PC video card.
Do black spots appear on the screen?	• Several pixels (red, green, white or black color) may appear on the screen, which can be attributable to the unique characteristics of the LCD panel. It is not a malfunction of the LCD.

The operation does not work normally.

Problem	Resolution
The power suddenly turned off.	• Is the sleep timer set? • Check the power control settings. Power interrupted. • "Caution, Fan Error!" If the power is turned off after this message appears, it means that the fan is out of order.In this case, contact your local service center.

SPECIFICATIONS

LCD Panel	Screen Type	1192.8 mm Wide (46.96 inch) TFT (Thin Film Transistor) LCD (Liquid Crystal Display) Panel. Visible diagonal size : 1192.8 mm
	Pixel Pitch	0.5415 mm (H) x 0.5415 mm (V)
Video Signal	Max. Resolution	RGB : 1920 X 1080 @60Hz HDMI/DVI : 1920 X 1080 @60Hz - It may not be supported depending on the OS or video card type.
	Recommended Resolution	RGB : 1920 X 1080 @60Hz HDMI/DVI : 1920 X 1080 @60Hz - It may not be supported depending on the OS or video card type.
	Horizontal Frequency	RGB : 30 kHz to 83 kHz HDMI/DVI : 30 kHz to 83 kHz
	Vertical Frequency	RGB : 56 Hz to 75 Hz HDMI/DVI : 56 Hz to 60 Hz
	Synchronization Type	Separate Sync, Composite Sync, Digital
Input Connector		15-pin D-Sub type, HDMI (digital), AV(CVBS) Video, RS-232C, LAN
Power	Rated Voltage	AC 100-240 V~ 50/60 Hz 3.0 A
	Power Consumption	On Mode : 300 W Typ. Sleep Mode : ≤ 1 W (RGB) / 2 W (HDMI/DVI) Off Mode : ≤ 0.5 W
Environmental conditions	Operating Temperature Operating Humidity	5 °C to 40 °C 10 % to 80 %
	Storage Temperature Storage Humidity	-20 °C to 60 °C 5 % to 95 %

Product specifications shown above may be changed without prior notice due to upgrade of product functions.

Dimensions (Width x Height x Depth) / Weight	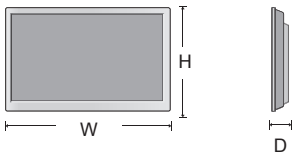
	1117 mm x 661 mm x 118.7 mm / 28.54 kg
	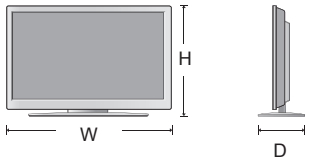
	1117 mm x 757.8 mm x 302.6 mm / 32.56 kg
	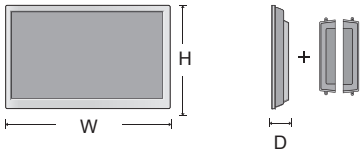
	1117 mm x 661.0 mm x 118.7 mm / 29.29 kg
	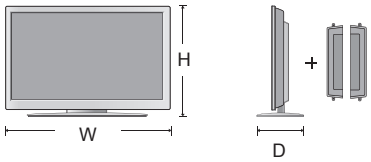
	1117 mm x 757.8 mm x 302.6 mm / 33.3 kg

*** Applicable only for models that support the speakers**

Audio	RMS Audio Output	10 W + 10 W (R + L)
	Input Sensitivity	0.7 Vrms
	Speaker Impedance	8 Ω

Product specifications shown above may be changed without prior notice due to upgrade of product functions.

RGB (PC) supported mode

Resolution	Horizontal Frequency(kHz)	Vertical Frequency(Hz)
640 x 350	31.469	70.8
720 x 400	31.468	70.8
640 x 480	31.469	59.94
640 x 480	37.5	75
800 x 600	37.879	60.317
800 x 600	46.875	75
832 x 624	49.725	74.55
1024 x 768	48.363	60
1024 x 768	60.123	75.029
1280 x 720	44.772	59.855
1280 x 768	47.7	60
1360 x 768	47.72	59.799
1366 x 768	47.7	60
1280 x 1024	63.981	60.02
1280 x 1024	79.98	75.02
1680 x 1050	65.290	59.954
1920 x 1080	67.5	60

HDMI/DVI(PC) supported mode

Resolution	Horizontal Frequency(kHz)	Vertical Frequency(Hz)
640 x 480	31.469	59.94
800 x 600	37.879	60.317
1024 x 768	48.363	60
1280 x 720	44.772	59.855
1280 x 768	47.7	60
1360 x 768	47.72	59.799
1366 x 768	47.7	60
1280 x 1024	63.981	60.02
1680 x 1050	65.290	59.954
1920 x 1080	67.5	60

DTV Mode

Resolution	HDMI/DVI (DTV)
480i	x
576i	x
480p	o
576p	o
720p	o
1080i	o
1080p	o

Power Indicator

Mode	Monitor Set
On Mode	Blue
Sleep Mode	Amber
Off Mode	-

NOTE

- DTV/PC selection on RGB and HDMI/DVI inputs is available for PC resolutions : 640 x 480 / 60 Hz, 1280 x 720 / 60 Hz, 1920 x 1080 / 60 Hz and DTV resolutions : 480p, 720p, 1080p.

RS-232C

Connecting the cable

Connect the RS-232C cable as shown in the picture.

- The RS-232C protocol is used for communication between the PC and product. You can turn the product on/off, select an input source or adjust the OSD menu from your PC.

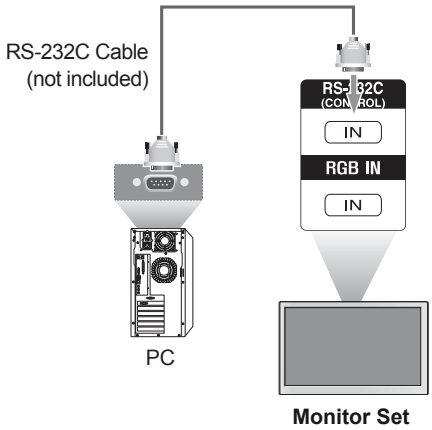

RS-232C Configurations

7-Wire Configurations (Standard RS-232C cable)

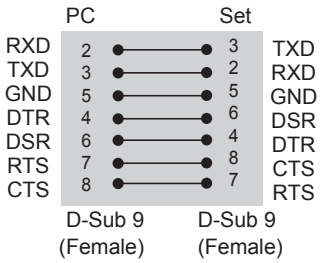

3-Wire Configurations (Not Standard)

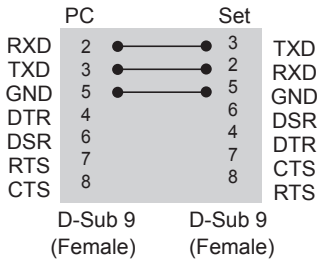

Communication Parameter

- Baud Rate : 9600 buad Rate (UART)
- Data Length : 8 bit
- Parity Bit : None
- Stop Bit : 1bit
- Flow Control : None
- Communication Code : ASCII code
- Use a crossed (reverse) cable

Command reference list

	COMMAND		DATA		
	1	2	1	2	3
01. Power	k	a	00H to 01H		
02. Input Select	k	b	02H to 09H		
03. Aspect Ratio	k	c	01H to 09H		
04. Screen Mute	k	d	00H to 01H		
05. Volume Mute	k	e	00H to 01H		
06. Volume Control	k	f	00H to 64H		
07. Contrast	k	g	00H to 64H		
08. Brightness	k	h	00H to 64H		
09. Color	k	i	00H to 64H		
10. Tint	k	j	00H to 64H		
11. Sharpness	k	k	00H to 64H		
12. OSD Select	k	l	00H to 01H		
13. Remote Lock/ key Lock	k	m	00H to 01H		
14. Balance	k	t	00H to 64H		
15. Color Temperature	k	u	00H to 03H		
16. Abnormal state	k	z	FFH		
17. ISM mode	j	p	00H to 10H		
18. Auto configuration	j	u	01H		
19. Key	m	c	Key Code		
20. Tile Mode	d	d	00H to 55H		
21. Tile H Position	d	e	00H to 64H		
22. Tile V Position	d	f	00H to 64H		
23. Tile H Size	d	g	00H to 64H		
24. Tile V Size	d	h	00H to 64H		
25. Tile ID Set	d	i	00H to 19H		
26. Natural Mode (In Tile mode)	d	j	00H to 01H		
27. Picture mode(PSM)	d	x	00H to 06H		
28. Sound mode	d	y	00H to 06H		
29. Fan Fault check	d	w	FFH		
30. Elapsed time return	d	l	FFH		
31. Temperature value	d	n	FFH		
32. Lamp fault check	d	p	FFH		
33. Auto Volume	d	u	00H to 01H		
34. Speaker	d	v	00H to 01H		
35. Sleep Time	f	f	00H to 08H		

	COMMAND		DATA		
	1	2	1	2	3
36. Auto Sleep	f	g	00H to 01H		
37. Power On Delay	f	h	00H to 64H		
38. Language	f	i	00H to 09H		
39. DPM Select	f	j	00H to 01H		
40. Reset	f	k	00H to 02H		
41. Power Saving	f	l	00H to 03H		
42. Power Indicator	f	o	00H to 01H		
43. H Position	f	q	00H to 64H		
44. V Position	f	r	00H to 64H		
45. H Size	f	s	00H to 64H		
46. V Size	f	t	00H to 64H		
47. Serial no.	f	y	FFH		
48. S/W Version	f	z	FFH		
49. Input Select	x	b	20H to A0H		

Transmission / Receiving protocol

Transmission

[Command1][Command2][ ][Set ID][ ][Data][Cr]

* [Command 1]: First command. (k, j, m, d, f, x)
* [Command 2]: Second command.(a to u)
* [Set ID]: Set up the Set ID number of product.
  range : 01H to 63H. by setting '0', server can control all products.
* In case of operating with more than 2 sets using set ID as '0' at the same time, it should not be checked the ack message. Because all sets will send the ack message, so it's impossible the check the whole ack messages.
* [DATA]: To transmit command data.
  Transmit 'FF' data to read status of command.
* [Cr]: Carriage Return (ASCII code '0 x 0 D')
* [ ]: ASCII code Space (0 x 20)

OK Acknowledgement

[Command2][ ][Set ID][ ][OK][Data][x]

* The Product transmits ACK (acknowledgement) based on this format when receiving normal data. At this time, if the data is data read mode, it indicates present status data. If the data is data write mode, it returns the data of the PC computer.

Error Acknowledgement

[Command2][ ][Set ID][ ][NG][Data][x]

* If there is error, it returns NG

01. Power (Command: k a)

To control Power On/Off of the set.

Transmission

[k][a][ ][Set ID][ ][Data][Cr]

Data 0 : Power Off Data 1 : Power On

Acknowledgement

[a][ ][Set ID][ ][OK][Data][x]

To show the status of Power On/Off.

Transmission

[k][a][ ][Set ID][ ][FF][Cr]

Acknowledgement

[a][ ][Set ID][ ][OK][Data][x]

Data 0 : Power Off Data 1 : Power On
9 : DPM

02. Input Select (Command: k b) (Main Picture Input)

To select input source for the Set.
You can also select an input source using the INPUT button on the remote control.

Transmission

[k][b][ ][Set ID][ ][Data][Cr]

Data 2 : AV
7 : RGB (PC)
8 : HDMI (DTV)
9 : HDMI (PC)

Acknowledgement

[b][ ][Set ID][ ][OK][Data][x]

Data 2 : AV
7 : RGB (PC)
8 : HDMI (DTV)
9 : HDMI (PC)

03. Aspect Ratio (Command: k c) (Main Picture Input)

To adjust the screen format.
You can also adjust the screen format using the ARC (Aspect Ratio Control) button on remote control or in the Screen menu.

Transmission

[k][c][ ][Set ID][ ][Data][Cr]

Data 1 : Normal Screen (4 : 3)
2 : Wide Screen (16 : 9)
4 : Zoom1 (AV)
5 : Zoom2 (AV)
6 : Original (AV)
7 :14 : 9 (AV)
9 : Just Scan(HD DTV),
1 : 1 (RGB PC, HDMI / DVI PC)

Acknowledgement

[c][ ][Set ID][ ][OK][Data][x]

04. Screen Mute (Command: k d)

To select screen mute on / off.

Transmission

[k][d][ ][Set ID][ ][Data][Cr]

Data 0 : Screen mute off (Picture on)
1 : Screen mute on (Picture off)

Acknowledgement

[d][ ][Set ID][ ][OK][Data][x]

05. Volume Mute (Command: k e)

To control On/Off of the Volume Mute.

Transmission

[k][e][ ][Set ID][ ][Data][Cr]

Data 0 : Volume Mute On (Volume Off)
1 : Volume Mute Off (Volume On)

Acknowledgement

[e][ ][Set ID][ ][OK][Data][x]

Data 0 : Volume Mute On (Volume Off)
1 : Volume Mute Off (Volume On)

06. Volume Control (Command: k f)

To adjust Volume.

Transmission

[k][f][ ][Set ID][ ][Data][Cr]

Data Min : 00H to Max : 64H
(Hexadecimal code)

Acknowledgement

[f][ ][Set ID][ ][OK][Data][x]

Data Min : 00H to Max : 64H

*** Real data mapping**

0 : STEP 0
:
A : STEP 10
:
F : STEP 15
10 : STEP 16
:
64 : STEP 100

07. Contrast (Command: k g)

To adjust screen contrast.
You can also adjust the contrast in the Picture menu.

Transmission

[k][g][ ][Set ID][ ][Data][Cr]

Data Min : 00H to Max : 64H

Acknowledgement

[g][ ][Set ID][ ][OK][Data][x]

* Refer to 'Real data mapping '. See p.39

08. Brightness (Command: k h)

To adjust screen brightness.
You can also adjust the brightness in the Picture menu.

Transmission

[k][h][ ][Set ID][ ][Data][Cr]

Data Min : 00H to Max : 64H
(Hexadecimal code)
* Refer to 'Real data mapping '. See p.39

Acknowledgement

[h][ ][Set ID][ ][OK][Data][x]

* Refer to 'Real data mapping '. See p.39

09. Color (Command: k i) (Video Timing only)

To adjust the screen color.
You can also adjust the color in the Picture menu.

Transmission

[k][i][ ][Set ID][ ][Data][Cr]

Data Min : 00H to Max : 64H
(Hexadecimal code)

Acknowledgement

[i][ ][Set ID][ ][OK][Data][x]

Data Min : 00H to Max : 64H

10. Tint (Command: k j) (Video Timing only)

To adjust the screen tint.
You can also adjust the tint in the Picture menu.

Transmission

[k][j][ ][Set ID][ ][Data][Cr]

Data Min : 00H to Max : 64H
(Hexadecimal code)
* Refer to 'Real data mapping '. See p.39

Acknowledgement

[j][ ][Set ID][ ][OK][Data][x]

Data Red : 00H to Green : 64H

* Tint Real data mapping
0 : Step 0 to Red
:
64 : Step 100 to Green

11. Sharpness (Command: k k) (Video Timing only)

To adjust the screen Sharpness.
You can also adjust the sharpness in the Picture menu.

Transmission

[k][k][ ][Set ID][ ][Data][Cr]

Data Min : 00H to Max : 64H
(Hexadecimal code)
* Refer to 'Real data mapping'. See p.39

Acknowledgement

[k][ ][Set ID][ ][OK][Data][x]

Data Min : 00H to Max : 64H

12. OSD Select (Command: k l)

To control OSD on/off to the set.

Transmission

[k][l][ ][Set ID][ ][Data][Cr]

Data 0: OSD Off Data 1: OSD On

Acknowledgement

[l][ ][Set ID][ ][OK][Data][x]

Data 0: OSD Off Data 1: OSD On

13. Remote Lock /Key Lock (Command: k m)

To control Remote Lock on/off to the set.
This function, when controlling RS-232C, locks the remote control and the local keys.

Transmission

[k][m][ ][Set ID][ ][Data][Cr]

Data 0: Off Data 1: On

Acknowledgement

[m][ ][Set ID][ ][OK][Data][x]

Data 0: Off Data 1: On

14. Balance (Command: k t)

To adjust the sound balance.

Transmission

[k][t][ ][Set ID][ ][Data][Cr]

Data Min : 00H to Max : 64H
(Hexadecimal code)
* Refer to 'Real data mapping '. See p.39

Acknowledgement

[t][ ][Set ID][ ][OK][Data][x]

Data Min : 00H to Max : 64H

* Balance : L50 to R50

15. Color Temperature (Command: k u)

To adjust the screen color temperature.

Transmission

[k][u][ ][Set ID][ ][Data][Cr]

Data 0 : Medium
1 : Cool
2 : Warm
3 : User

Acknowledgement

[u][ ][Set ID][ ][OK][Data][x]

Data 0 : Medium
1 : Cool
2 : Warm
3 : User

* Running the Color Temperature command changes the Picture Mode settings to User1.

16. Abnormal state (Command: k z)

Used to Read the power off status when Stand-by mode.

Transmission

[k][z][ ][Set ID][ ][Data][Cr]

Data FF : Read
0 : Normal (Power on and signal exist)
1 : No signal (Power on)
2 : Turn the monitor off by remote control
3 : Turn the monitor off by sleep time function
4 : Turn the monitor off by RS-232C function
8 : Turn the monitor off by off time function
9 : Turn the monitor off by auto off function

Acknowledgement

[z][ ][Set ID][ ][OK][Data][x]

17. ISM mode (Command: j p)

Used to select the afterimage preventing function.

Transmission

[j][p][ ][Set ID][ ][Data][Cr]

Data 1H : Inversion
2H : Orbiter
4H : White Wash
8H : Normal
10H : Dot Wash

Acknowledgement

[p][ ][Set ID][ ][OK][Data][x]

18. Auto Configure (Command: j u)

To adjust picture position and minimize image shaking automatically. it works only in RGB(PC) mode.

Transmission

[j][u][ ][Set ID][ ][Data][Cr]

Data 1 : To set

Acknowledgement

[u][ ][Set ID][ ][OK][Data][x]

19. Key (Command: m c)

To send IR remote key code.

Transmission

[m][c][ ][Set ID][ ][Data][Cr]

Data Key code : Refer to 'IR CODES'. See p.47

Acknowledgement

[c][ ][Set ID][ ][OK][Data][x]

20. Tile Mode (Command: d d)

Change a Tile Mode.

Transmission

[d][d][ ][Set ID][ ][Data][Cr]

Data	Description
00 or 11	Tile mode is off.
12	1 x 2 mode (column x row)
13	1 x 3 mode
14	1 x 4 mode
...	...
55	5 x 5 mode

* The data can not be set to 0X or X0 except 00.

Acknowledgement

[d][ ][Set ID][ ][OK/NG][Data][x]

21. Tile H Position (Command: d e)

To set the Horizontal position.

Transmission

[d][e][ ][Set ID][ ][Data][Cr]

Data Min : 00H to Max : 64H
* Refer to 'Real data mapping '. See p.39

Acknowledgement

[e][ ][Set ID][ ][OK/NG][Data][x]

22. Tile V Position (Command: d f)

To set the Vertical position.

Transmission

[d][f][ ][Set ID][ ][Data][Cr]

Data Min : 00H to Max : 64H
* Refer to 'Real data mapping '. See p.39

Acknowledgement

[f][ ][Set ID][ ][OK/NG][Data][x]

23. Tile H Size (Command: d g)

To set the Horizontal size.

Transmission

[d][g][ ][Set ID][ ][Data][x]

Data Min : 00H to Max : 64H
* Refer to 'Real data mapping '. See p.39

Acknowledgement

[g][ ][Set ID][ ][OK/NG][Data][x]

24. Tile V Size (Command: d h)

To set the Vertical size.

Transmission

[d][h][ ][Set ID][ ][Data][x]

Data Min : 00H to Max : 64H
* Refer to 'Real data mapping '. See p.39

Acknowledgement

[h][ ][Set ID][ ][OK/NG][Data][x]

25. Tile ID Set (Command: d i)

To assign the Tile ID for Tiling function.

Transmission

[d][i][ ][Set ID][ ][Data][x]

Data Min : 00H to Max : 19H
(Hexadecimal code)

Acknowledgement

[i][ ][Set ID][ ][OK/NG][Data][x]

26. Natural Mode (In Tile mode)(Command: d j)

To assign the Tile Natural mode for Tiling function.

Transmission

[d][j][ ][Set ID][ ][Data][x]

Data 0 : Natural Off
1 : Natural On
ff : Read Status

Acknowledgement

[j][ ][Set ID][ ][OK/NG][Data][x]

27. Picture Mode (Command: d x)

To adjust the picture mode.

Transmission

[d][x][ ][Set ID][ ][Data][x]

Data Structure

Data(Hex)	Mode
00	Vivid
01	Standard
02	Cinema
03	Sport
04	Game
05	User1
06	User2

Acknowledgement

[x][ ][Set ID][ ][OK/NG][Data][x]

28. Sound Mode (Command: d y)

To adjust the Sound mode.

Transmission

[d][y][ ][Set ID][ ][Data][x]

Data Structure

Data(Hex)	Mode
00	Clear Voice
01	Standard
02	Music
03	Cinema
04	sport
05	Game
06	User

Acknowledgement

[y][ ][Set ID][ ][OK/NG][Data][x]

29. Fan Fault check (Command: d w)

To check the Fan fault of the Set.

Transmission

[d][w][ ][Set ID][ ][Data][x]

* The data is always FF (in Hex).
Data ff : Read Status

Acknowledgement

[w][ ][Set ID][ ][OK/NG][Data][x]

* Data is the status value of the Fan fault.
Data 0 : Fan fault
1 : Fan Ok
2 : N/A (Not Avaliable)

30. Elapsed time return (Command: d l)

To read the elapsed time.

Transmission

[d][l][ ][Set ID][ ][Data][x]

* The data is always FF(in Hex).

Acknowledgement

[l][ ][Set ID][ ][OK/NG][Data][x]

* The data is always FF(in Hex).
(Hexadecimal code)

31. Temperature value (Command: d n)

To read the inside temperature value.

Transmission

[d][n][ ][Set ID][ ][Data][x]

* The data is always FF(in Hex).

Acknowledgement

[n][ ][Set ID][ ][OK/NG][Data][x]

* The data is 1 byte long in Hexadecimal.

32. Lamp fault Check (Command: d p)

To check lamp fault.

Transmission

[d][p][ ][Set ID][ ][Data][x]

* The data is always FF(in Hex).

Acknowledgement

[p][ ][Set ID][ ][OK/NG][Data][x]

* The data is 1 byte long in Hexadecimal.

Data 0 : Lamp Fault
1 : Lamp Ok

33. Auto volume (Command: d u)

Automatically adjust the volume level.

Transmission

[d][u][ ][Set ID][ ][Data][x]

Data 0: Off Data 1: On

Acknowledgement

[u][ ][Set ID][ ][OK/NG][Data][x]

34. Speaker (Command: d v)

Turn the speaker on or off.

Transmission

[d][v][ ][Set ID][ ][Data][x]

Data 0: Off Data 1: On

Acknowledgement

[v][ ][Set ID][ ][OK/NG][Data][x]

35. Sleep Time (Command: f f)

Set Sleep Time.

Transmission

[f][f][ ][Set ID][ ][Data][Cr]

Data 00 : Off
01 : 10
02 : 20
03 : 30
04 : 60
05 : 90
06 : 120
07 : 180
08 : 240
(Orderly)

Acknowledgement

[f][ ][Set ID][ ][OK/NG][Data][x]

36. Auto Sleep (Command: f g)

Set Auto Sleep.

Transmission

[f][g][ ][Set ID][ ][Data][Cr]

Data 0: Off Data 1: On

Acknowledgement

[g][ ][Set ID][ ][OK/NG][Data][x]

37. Power On Delay (Command: f h)

Set the schedule delay when the power is turned on (Unit: second).

Transmission

[f][h][ ][Set ID][ ][Data][Cr]

Data : 00H to 64H (Data value)
* Refer to 'Real data mapping '. See p.39

Acknowledgement

[h][ ][Set ID][ ][OK/NG][Data][x]

38. Language (Command: f i)

Set the OSD language.

Transmission

[f][i][ ][Set ID][ ][Data][Cr]

Data 0 : English
1 : French
2 : German
3 : Spanish
4 : Italian
5 : Portuguese
6 : Chinese
7 : Japanese
8 : Korean
9 : Russian

Acknowledgement

[i][ ][Set ID][ ][OK/NG][Data][x]

39. DPM Select (Command: f j)

Set the DPM (Display Power Management) function.

Transmission

[f][j][ ][Set ID][ ][Data][Cr]

Data 0 : Off
1 : On

Acknowledgement

[j][ ][Set ID][ ][OK/NG][Data][x]

40. Reset (Command: f k)

Set the DPM (Display Power Management) function.

Transmission

[f][k][ ][Set ID][ ][Data][Cr]

Data 0 : Picture Reset
1 : Screen Reset
2 : Factory Reset

Acknowledgement

[k][ ][Set ID][ ][OK/NG][Data][x]

41. Power saving (Command: f l)

To set the Power saving mode.

Transmission

[f][l][ ][Set ID][ ][Data][Cr]

Data 0 : Off
1 : Level 1
2 : Level 2
3 : Level 3

Acknowledgement

[l][ ][Set ID][ ][OK/NG][Data][x]

42. Power Indicator (Command: f o)

To set the LED for Power Indicator

Transmission

[f][o][ ][Set ID][ ][Data][Cr]

Data 00 : Off
01 : On

Acknowledgement

[o][ ][Set ID][ ][OK/NG][Data][x]

43. H Position (Command : f q)

To set the Horizontal position

Transmission

[f][q][ ][Set ID][ ][Data][Cr]

Data : 00H to 64H
* Refer to 'Real data mapping '. See p.39

Acknowledgement

[q][ ][Set ID][ ][OK/NG][Data][x]

44. V Position (Command : f r)

To set the Vertical positionTransmission

[f][r][ ][Set ID][ ][Data][Cr]

Data : 00H to 64H
* Refer to 'Real data mapping '. See p.39

Acknowledgement

[r][ ][Set ID][ ][OK/NG][Data][x]

45. H Size (Command : f s)

To set the Horizontal size.

Transmission

[f][s][ ][Set ID][ ][Data][Cr]

Data : 00H to 64H

* Refer to 'Real data mapping '. See p.39

Acknowledgement

[s][ ][Set ID][ ][OK/NG][Data][x]

* H Size Real Data Mapping

[Data1]
0x00: Step 0
0x0A: Step 10
0x14: Step 20
0x1E: Step 30
0x28: Step 40
0x32: Step 50
0x3C: Step 60
0x46: Step 70
0x50: Step 80
0x5A: Step 90
0x64: Step 100

46. V Size (Command : f t)

To set the Vertical size

Transmission

[f][t][ ][Set ID][ ][Data][Cr]

Data : 00H to 64H

* Refer to 'Real data mapping '. See p.39

Acknowledgement

[t][ ][Set ID][ ][OK/NG][Data][x]

* V Size Real Data Mapping

[Data1]
0x00: Step 0
0x0A: Step 10
0x14: Step 20
0x1E: Step 30
0x28: Step 40
0x32: Step 50
0x3C: Step 60
0x46: Step 70
0x50: Step 80
0x5A: Step 90
0x64: Step 100

47. Serial no. (Command: f y)

Check the Serial no.

Transmission

[f][y][ ][Set ID][ ][Data][Cr]

Data FF (to read the serial numbers)

Acknowledgement

[y][ ][Set ID][ ][OK/NG][Data1] to [Data13][x]

* The data format is ASCII Code.

48. S/W Version (Command: f z)

Check the software version.

Transmission

[f][z][ ][Set ID][ ][Data][Cr]

Data FF : Read

Acknowledgement

[z][ ][Set ID][ ][OK/NG][Data][x]

49. Input Select (Command: x b)

To select input source for the Set.

Transmission

[x][b][ ][Set ID][ ][Data][Cr]

Data 20H : AV
60H : RGB (PC)
90H : HDMI/DVI (DTV)
A0H : HDMI/DVI (PC)

Acknowledgement

[b][ ][Set ID][ ][OK/NG][Data][x]

Data 20H : AV
60H : RGB (PC)
90H : HDMI/DVI (DTV)
A0H : HDMI/DVI (PC)

IR CODES

Code(Hex)	Function	Note
00	▲	R/C Button
01	▼	R/C Button
02	VOL(▶)	R/C Button
03	VOL(◀)	R/C Button
08	POWER ON/OFF	R/C Button (Power On / Off)
C4	POWER ON	Discrete IR Code (Only Power On)
C5	POWER OFF	Discrete IR Code (Only Power Off)
09	MUTE	R/C Button
98	AV	R/C Button
0B	INPUT	R/C Button
0E	SLEEP	R/C Button
43	MENU	R/C Button
5B	EXIT	R/C Button
6E	PSM	R/C Button
44	SET	R/C Button
10	Number Key 0	R/C Button
11	Number Key 1	R/C Button
12	Number Key 2	R/C Button
13	Number Key 3	R/C Button
14	Number Key 4	R/C Button
15	Number Key 5	R/C Button
16	Number Key 6	R/C Button
17	Number Key 7	R/C Button
18	Number Key 8	R/C Button
19	Number Key 9	R/C Button
5A	AV	Discrete IR Code(Input AV Selection)
D5	RGB PC	Discrete IR Code(Input RGB PC Selection)
C6	HDMI/DVI	Discrete IR Code(Input HDMI/DVI Selection)
79	ARC	R/C Button
76	ARC (4 : 3)	Discrete IR Code(Only 4 : 3 mode)
77	ARC (16 : 9)	Discrete IR Code(Only 16 : 9 mode)
AF	ARC (ZOOM)	Discrete IR Code(Only ZOOM1, ZOOM2 mode)
99	AUTO CONFIG	Discrete IR Code

LG
Life's Good

Make sure to read the Safety Precautions before using the product.
Keep the Owner's Manual(CD) in an accessible place for future reference.
The model and serial number of the SET is located on the back and one side of the SET.
Record it below should you ever need service.

MODEL _____

SERIAL _____

Temporary noise is normal when powering ON or OFF this device.