LG
Life's Good

ENGLISH

OWNER'S MANUAL

Wireless Speaker with Lightning Dock

MUSIC IN STYLE

Please read this manual carefully before operating your set and retain it for future reference.

FOR THE GUARANTEE TERMS & CONDITIONS, PLEASE REFER TO INNER PAGE OF BACK COVER.

ND2530

MFL67657550

Safety Information



CAUTION: TO REDUCE THE RISK OF ELECTRIC SHOCK DO NOT REMOVE COVER (OR BACK) NO USER-SERVICEABLE PARTS INSIDE REFER SERVICING TO QUALIFIED SERVICE PERSONNEL.



This lightning flash with arrowhead symbol within an equilateral triangle is intended to alert the user to the presence of uninsulated dangerous voltage within the product's enclosure that may be of sufficient magnitude to constitute a risk of electric shock to persons.



The exclamation point within an equilateral triangle is intended to alert the user to the presence of important operating and maintenance (servicing) instructions in the literature accompanying the product.

WARNING: TO PREVENT FIRE OR ELECTRIC SHOCK HAZARD, DO NOT EXPOSE THIS PRODUCT TO RAIN OR MOISTURE.

WARNING: Do not install this equipment in a confined space such as a book case or similar unit.

NOTICE : For safety marking information including product identification and supply ratings, please refer to the main label on the bottom of the apparatus.

CAUTION concerning the Power Cord

Most appliances recommend they be placed upon a dedicated circuit;

That is, a single outlet circuit which powers only that appliance and has no additional outlets or branch circuits. Check the specification page of this owner's manual to be certain. Do not overload wall outlets. Overloaded wall outlets, loose or damaged wall outlets, extension cords, frayed power cords, or damaged or cracked wire insulation are dangerous. Any of these conditions could result in electric shock or fire. Periodically examine the cord of your appliance, and if its appearance indicates damage or deterioration, unplug it, discontinue use of the appliance, and have the cord replaced with an exact replacement part by an authorized service centre. Protect the power cord from physical or mechanical abuse, such as being twisted, kinked, pinched, closed in a door, or walked upon. Pay particular attention to plugs, wall outlets, and the point where the cord exits the appliance. To disconnect power from the mains, pull out the mains cord plug. When installing the product, ensure that the plug is easily accessible.

This device is equipped with a portable battery or accumulator.

Safety way to remove the battery or the battery from the equipment: Remove the old battery or battery pack, follow the steps in reverse order than the assembly. To prevent contamination of the environment and bring on possible threat to human and animal health, the old battery or the battery put it in the appropriate container at designated collection points. Do not dispose of batteries or battery together with other waste. It is recommended that you use local, free reimbursement systems batteries and accumulators. The battery shall not be exposed to excessive heat such as sunshine, fire or the like.

CAUTION: The apparatus shall not be exposed to water (dripping or splashing) and no objects filled with liquids, such as vases, shall be placed on the apparatus.

Disposal of your old appliance



1. When this crossed-out wheeled bin symbol is attached to a product it means the product is covered by the European Directive 2002/96/EC.
2. All electrical and electronic products should be disposed of separately from the municipal waste stream via designated collection facilities appointed by the government or the local authorities.
3. The correct disposal of your old appliance will help prevent potential negative consequences for the environment and human health.
4. For more detailed information about disposal of your old appliance, please contact your city office, waste disposal service or the shop where you purchased the product.

Disposal of waste batteries/accumulators



1. When this crossed-out wheeled bin symbol is attached to batteries/ accumulators of Your product it means they are covered by European Directive 2006/66/EC.
2. This symbol may be combined with chemical symbols for mercury(Hg), cadmium(Cd) or lead(Pb) if the battery Contains more that 0.0005% of mercury,0.002% of cadmium or 0.004% of lead.
3. All batteries/accumulators should be disposed separately from the municipal waste stream via designated collection facilities appointed by the government or the local authorities.
4. The correct disposal of Your old batteries/accumulators will help to prevent potential negative consequences for the environment, animal and human health.
5. For more detailed information about disposal of Your old batteries/ accumulators, please contact Your city office, waste disposal service or the shop where You purchased the product.

CE 0984

LG Electronics hereby declares that this/these product(s) is/are in compliance with the essential requirements and other relevant provisions of Directive 1999/5/EC, 2004/108/EC, 2006/95/EC, 2009/125/EC and 2011/65/EU.

Please contact to the following address for obtaining a copy of the DoC (Declaration of Conformity).

Contact office for compliance of this product:

LG Electronics Inc.
EU Representative, Krijgsman 1,
1186 DM Amstelveen, The Netherlands

- Please note that this is NOT a Customer Service contact point. For Customer Service Information, see Warranty Card or contact the dealer that you purchased this product.

In door use only.

RF Radiation Exposure Statement

This equipment should be installed and operated with minimum distance 20cm between the radiator and your body.

POWER: This unit operates on a mains supply of 100-240V, 50/60Hz.

WIRING: This unit is supplied with a BS 1363 approved main plug. When replacing the fuse, always use of the same rating approved to BS 1362. Never use this plug with the fuse cover omitted. To obtain a replacement fuse cover contact your dealer. If the type of plug supplied is not suitable for the mains sockets in your home, then the plug should be removed and a suitable type fitted. Please refer to the wiring instructions below:

WIRING: A mains plug removed from the mains lead of this unit must be destroyed. A mains plug with bared wires is hazardous if inserted in a mains socket. Do not connect either wire to the earth pin, marked with the letter E or with the earth symbol ⏚ or coloured green or green and yellow. If any other plug is fitted, use same rating of fuse in the plug.

IMPORTANT: The wires in this mains lead are coloured in accordance with the following codes:

- BLUE: NEUTRAL, BROWN: LIVE - As the colours of the wires in the mains lead of this unit may not correspond with the coloured marking identifying the terminals in your plug, proceed as follows: The wire which is coloured blue must be connected to the terminal which is marked with the letter N or coloured black. The wire which is coloured brown must be connected to the terminal which is marked with the letter L or coloured red.

Table of Contents

1 Getting Started

2 Safety Information
6 Main Features
6 Accessories
6 Introduction
7 Remote Control
8 Front Panel
8 Rear Panel
9 Connecting the AC Adapter
9 How to Attach the Ferrite Core (For EMI Only)

2 Operating

10 Basic Operations
10 – Switch to Standby mode
10 – Switch to Power Off
10 – iPod/iPhone/iPad Operations
11 – Compatible iPod/iPhone/iPad
13 – Turning Off the Sound Temporarily
13 – Auto Power Down
13 – Setting BASS sound effect
13 – Listening to Music from Your Portable Device
14 Using a Bluetooth Wireless Technology
14 – Listening to Music of a Bluetooth Device
15 Using Bluetooth App

3 Troubleshooting

17 Troubleshooting

4 Appendix

18 Trademarks and Licenses
18 Handling the Unit
19 Specifications

5 Warranty

23 Warranty

Main Features

Made for iPod/iPhone/iPad

Enjoys music from iPod/iPhone/iPad with simple connection.

Portable In

Listens to music from your portable device.

Bluetooth®

Enjoys music from Bluetooth device with simple connection.

BASS

Reinforce BASS sound effect.

LG Bluetooth Remote

You can control this unit with your iPod/iPhone/iPad via Bluetooth. This unit and your iPod/iPhone/iPad must be connected to Bluetooth APP. Visit " Apple App Store" and use this QR code to search for "LG Bluetooth Remote" app. For detailed information, refer to the 16 page.

(Apple iOS)

Accessories

Please check and identify the supplied accessories.

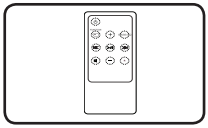

Remote control (1)

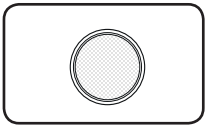

Battery (1)

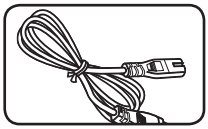

Power cord(1)

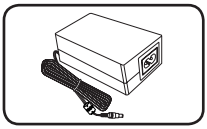

AC adapter(1)

Introduction

Symbol Used in This Manual

Note

Indicates special notes and operating features.

Caution

Indicates cautions for preventing possible damages from abuse.

Remote Control

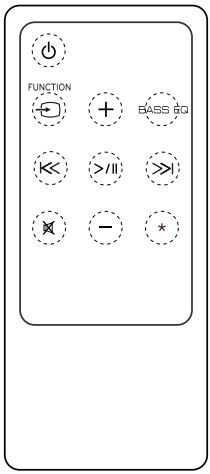

(Power): Switches the unit ON or OFF.

FUNCTION : Selects the function and input source.

+/- (Volume) : Adjusts volume of speaker.

BASS EQ : Reinforce BASS sound effect.

I<< / >>I(Skip/Search) :

-Skips fast Backward or Forward.
-Searches for a section within a file.

>/II(Play/Pause) : Starts or pause playback

(Mute) : Mutes the sound.

✱ : The button is not available for any function.

Caution

The battery used in this device may present a fire or chemical burn hazard if mistreated. Do not recharge, disassemble, incinerate, or heat above 100 °C (212 °F). Replace the battery part no. CR2025 only. Use of another battery may present a risk of fire or explosion. Dispose of used battery. Keep battery away from children. Do not disassemble or dispose of in fire.

Battery Installation

You have two ways to open the battery cover.

1. Turn the battery cover counterclockwise by using a coin or your finger. Then take the battery cover.

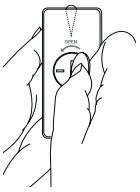
Coin

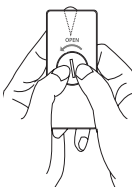
Finger

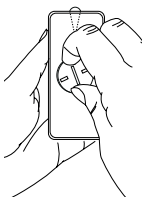

2. Insert and fix the battery with the plus (+) facing in the same direction as the plus (+) on the battery cover.

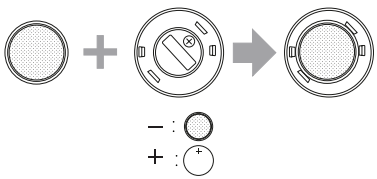

3. Put the battery cover on the remote control and turn it clockwise to close.


Coin

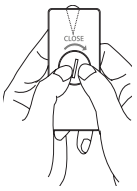
Finger

Caution

If you have long nails, do not open the battery cover by using your finger. Or else, your nail would be broken.

Front Panel

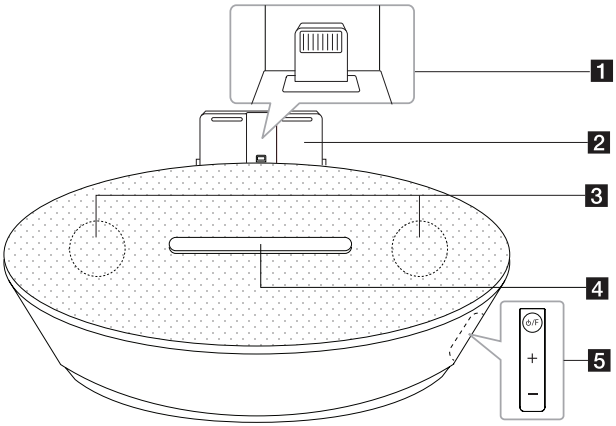

1 iPod/iPhone Dock (Lightning Connector)
2 Support for iPod/iPhone
3 Speaker
4 Display Window
Displays each of functions.

5 ⏻ **/ F** (Power/Function)
- Power on : Press ⏻ **/ F** to turn the unit on.
- Power off : Press and hold ⏻ **/ F** for about 3 seconds to turn the unit off.
- Selects the function and input source.

+/- (Volume)
Adjusts volume of speaker.

Rear Panel

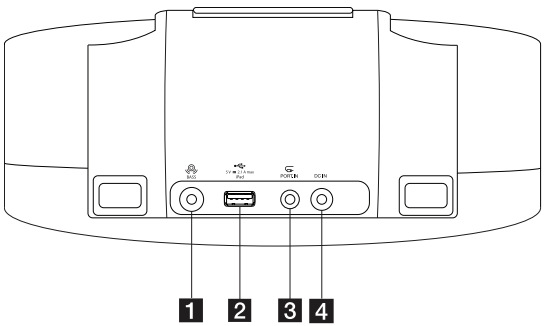

1 **BASS**
Reinforce BASS sound effect.

2 (USB)
Plays the audio files using your USB cable for iPod/iPhone/iPad.

3 **PORT.IN**
Listens to music from your portable device.

4 **DC IN** (AC adapter input)
Connects the supplied AC adapter.

Caution

Precautions in using the touch buttons

- Use the touch buttons with clean and dry hands. - In a humid environment, wipe out any moisture on the touch buttons before using.
- Do not press the touch buttons hard to make it work. - If you apply too much strength, it can damage the sensor of the touch buttons.
- Touch the button that you want to work in order to operate the function correctly.
- Be careful not to have any conductive material such as metallic object on the touch buttons. It can cause malfunctions.

Connecting the AC Adapter

1. Connect the supplied AC power cord to the AC adapter.
2. Connect the AC adapter cable to DC IN adapter input.
3. Plug the AC power cord into an AC outlet. Then the unit goes into standby mode.

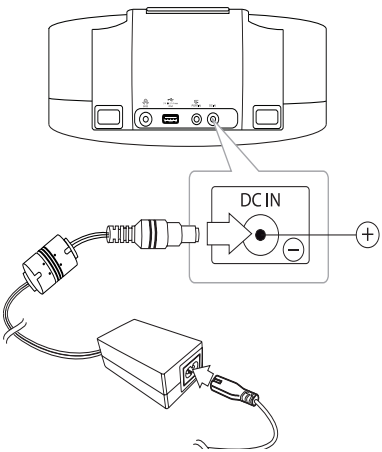

Caution

Only use the AC adapter supplied with this device. Do not use a power supply from another device or manufacturer. Using any other power cable or power supply may cause damage to the device and void your warranty.

How to Attach the Ferrite Core (For EMI Only)

You must affix the cores (supplied with the model you purchased) in order to reduce or eliminate electrical interference.

1. Pull the stopper [a] of the ferrite core to open.
2. Wind the portable cable and USB cable on the ferrite core.
3. Close the ferrite core until it clicks.

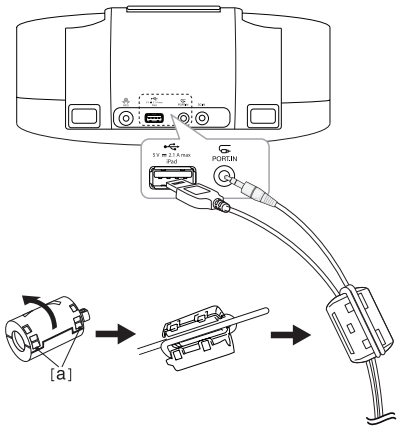

Basic Operations

Switch to Standby mode

Press ⏻ or press and hold ⏻ **/ F**. The LED indicators light up and the last function you selected blinks.Then the unit switches to standby mode.

Switch to Power Off

Press ⏻ or press and hold ⏻ **/ F**. The LED indicators light off and the unit switches to power off.

iPod/iPhone/iPad Operations

You can enjoy the sound from your iPod/iPhone/iPad through this unit. For details about iPod/iPhone/iPad, refer to the iPod/iPhone/iPad User Guide.

Enjoying Music by Docking Your iPod/iPhone(Lightning Connector) to the Unit

1. Install iPod/iPhone(Lightning Connector) support.

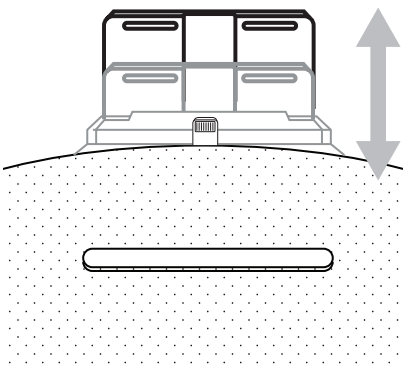

2. Dock the iPod/iPhone(Lightning Connector) firmly. If you turn this unit on, your iPod/iPhone is automatically turned on and starts recharging .

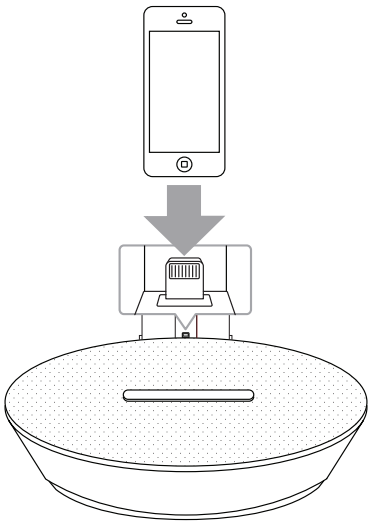

3. Press **FUNCTION** or ⏻**/F** to select iPod (IPOD) function.

Enjoying Music by Connecting Your iPod/iPhone/iPad(30 Pin/Lighting Connector) to the Unit

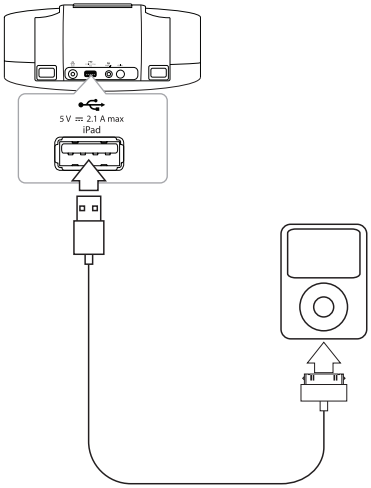

1. Connect iPod/iPhone/iPad (30 Pin/Lightning Connector) to the USB port on the unit by using the iPod/iPhone/iPad cable. If you turn this unit on, your iPod/iPhone/iPad (30 Pin/Lightning Connector) will be automatically turned on and start recharging.
2. Press **FUNCTION** or **/F** to select (USB) function. You can operate your iPod/iPhone/iPad (30 Pin/Lightning Connector) through an iPod/iPhone/iPad (30 Pin/Lightning Connector)'s display by using the remote control and controlling your iPod/iPhone/iPad (30 Pin/Lightning Connector).

Compatible iPod/iPhone/iPad

- The unit supports the models as follows ;

  iPhone 5
  iPhone 4S
  iPhone 4
  iPhone 3GS
  iPad 3G, 4G
  iPad 2
  iPad
  iPad mini
  iPod touch 3G, 4G, 5G
  iPod nano 4G, 5G, 6G, 7G

Depending on your iPod/iPhone/iPad's software version, you may not control your iPod/iPhone/iPad from the unit.

To	Do this
Pauses or restart	Press >/II.
Skip	During playback, press I<< / >>I to go to the next file or to return to the beginning of the current file. Playing less than 2 seconds, press I<< to go to the previous file. Playing after 3 seconds, press I<< to go to the beginning of the file.
Search	Press and hold I<< / >>I during playback and release it at the point you want to listen to.

Note

- If iPod/iPhone/iPad operation has an error, check these problems as follows;

  - Your iPod/iPhone/iPad is not connected firmly.
  - This unit recognizes your iPod/iPhone/iPad as an unknown device.
  - Your iPod/iPhone/iPad is exceptionally low in power.

  ➡ The battery needs to be charged.
  ➡ If you charge the battery while iPod/iPhone/iPad is extremely low in power, it may take longer to be charged.

- Depending on your iPod/ iPhone/ iPad 's software version, it may not be possible to control your iPod/ iPhone/ iPad from this unit. We recommend installing the latest software version.
- If you use an application, make a call, or send and receive SMS text message, etc. on iPod touch/iPhone/iPad, disconnect it from this unit and then use it.
- If you have a problem with your iPod/iPhone/iPad, please visit www.apple.com/support.
- In standby mode, you can charge your iPod/iPhone/iPad.
- You may need additional operation for iPod touch/iPhone/iPad, for example "unlock" before you use.

Turning Off the Sound Temporarily

Press to mute the sound. You can mute the sound in order, for example, to answer the telephone. To cancel mute function, press again or adjust volume level by pressing **+/-** (Volume).

Auto Power Down

This unit will be off itself to save electronic consumption in the case main unit is not connected to external device and is not used for 25 minutes.

So does this unit after six hours since Main unit has been connected to other device using analog input.

Setting BASS sound effect

You can listen to music by setting BASS sound effect. Press **BASS EQ** or **BASS** repeatedly.Then you can reinforce BASS sound effect.

Listening to Music from Your Portable Device

The unit can be used to play the music from many types of portable device. (Portable cable is not supplied as an accessory with this unit.)

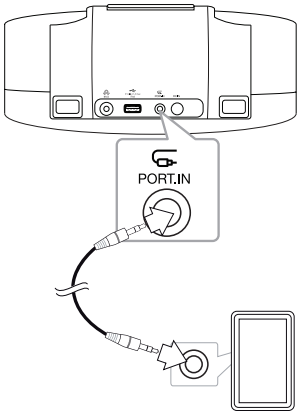

1. Connect the portable device to the **PORT. IN** connector of the unit.
2. Turn the power on by using or **/F**.
3. Select the (PORTABLE) function by pressing **FUNCTION** or **/F**.
4. Turn the portable device on and start playing it.

Using a Bluetooth Wireless Technology

About Bluetooth

Bluetooth® is wireless communication technology for short range connection.

The available range is within 10 meters.

(The sound may be interrupted when the connection interfered by the other electronic wave or you connect the bluetooth in the other rooms.) Connecting individual devices under ***Bluetooth***® wireless technology does not incur any charges. A mobile phone with ***Bluetooth***® wireless technology can be operated via the Cascade if the connection was made via ***Bluetooth***® wireless technology. Available Devices : Mobile phone, MP3, Laptop, PDA.

Bluetooth Profiles

In order to use Bluetooth wireless technology, devices must be able to interpret certain profiles. This unit is compatible with following profile.

A2DP (Advanced Audio Distribution Profile)

Listening to Music of a Bluetooth Device

Before you start the pairing procedure, make sure the Bluetooth feature is turned on in to your Bluetooth device. Refer to your Bluetooth device's user guide. Once a pairing operation is performed, it does not need to be performed again.

1. Select the Bluetooth function by using the **FUNCTION** or **/F**. Bluetooth LED " " blinks in the display window.
2. Operate the Bluetooth device and perform the pairing operation. When searching for this unit with the Bluetooth device, a list of the devices found may appear in the Bluetooth device display depending on the type of Bluetooth device.Your unit appears as "LG Docking (XX:XX)".

Note

XX:XX means the last four digits of BT address. For example, if your unit has a BT address such as 9C:02:98:4A:F7:08, you will see "LG Docking (F7:08)" on your Bluetooth device.

3. Enter the PIN code.
   PIN code : 0000
4. When this unit successfully is connected with your Bluetooth device, "Bluetooth" LED stop blinking.

Note

- Depending on the Bluetooth device type, some device have a different pairing way.
- Try pairing procedure if your device name is not in the device list.

5. Listen to music.
   To play a music stored on your Bluetooth device, refer to your Bluetooth device's user guide. According to your Bluetooth device's volume level, the volume level of Bluetooth will be adjusted.

Note

- Sound from the main set can be distorted if you raise the volume of Bluetooth device up to two-thirds or more.
- When you use the Bluetooth function, adjust the volume of a Bluetooth device to a proper level to listen to.

Note

- After your device is connected to the unit via Bluetooth, the function switches to BT automatically.
- After searching for this unit on your Bluetooth device, connect the Bluetooth device to this unit. Then play music you want.
- The sound may be interrupted when the connection interfered by the other electronic wave.
- You cannot control the Bluetooth device with this unit.
- Pairing is limited one Bluetooth device per one unit and multi-pairing is not supported.
- Although the distance between your Bluetooth and the set is less than 10m, there are obstacles between both, your Bluetooth device cannot be connected.
- Depending on the type of the device, you may not be able to use the Bluetooth function.
- You can enjoy wireless system using phone, MP3, Notebook, etc..
- When not connected the Bluetooth, " " LED blinks in the display window.
- The Electrical malfunction due to devices using same frequency such as Medical equipment, Microwaves or wireless LAN devices, the connection will be disconnected.
- When someone stands and interrupts communication between Bluetooth device and the player, the connection will be disconnected.
- If the gotten away of the distance between Bluetooth and the unit, the sound quality is lower and lower. The connection will be disconnected when the space between the Bluetooth and the unit gets out of the operating range of Bluetooth.
- The device with Bluetooth wireless technology is disconnected, if you turn off the main unit or put the device away from the main unit more than 10m.
- If the Bluetooth device is disconnected, you should connect the Bluetooth device to your unit.

Using Bluetooth App

About LG Bluetooth Remote App

LG Bluetooth Remote app bring a suite of new features to your unit. To enjoy more features, you are recommended to download and install free " LG Bluetooth Remote". BT app will be available in the software version 4.3(or late). Connect your device to the unit using setting display in your device, not BT app.

Install " LG Bluetooth Remote App" through " Apple App Store".

1. Tap the Apple App Store icon .
2. In the search bar, type in the "LG Bluetooth Remote" and search it.
3. In the search result list, find and tap "LG Bluetooth Remote" to start downloading Bluetooth app.
4. Tap an icon for installation.
5. Tap an icon for downloading.

Note

- Make sure that your powered Bluetooth device is connected to the Internet.
- Make sure that your powered Bluetooth device is equipped with " Apple App Store".
- If you want to get more information, refer to explanation of BT app in "Apple App Store".

Install " LG Bluetooth Remote App" by using QR code

1. Install " LG Bluetooth Remote app" by using QR code. Use the scaning software to scan the QR code.
2. Tap an icon for installation.
3. Tap an icon for downloading.



(Apple iOS)

Note

- Make sure that your powered Bluetooth device is connected to the Internet.
- Make sure that your powered Bluetooth device has a scanning software application. If you don't have one, download one from " Apple App Store" .

Activate Bluetooth with LG Bluetooth Remote App

LG Bluetooth Remote app helps to connect your powered Bluetooth device to the unit. After performing the pairing operation, activate Bluetooth with LG Bluetooth Remote App.

1. Tap LG Bluetooth Remote app icon on your device's screen to open LG Bluetooth Remote app application, and go to the main menu.
2. Tap [Setting] and select the unit you want.
3. If you want to get more information to operate, tap [Setting] and [Help].

Note

- BT app will be available in the software version as follow;
  iOS O/S : Ver 4.3(or late)
- If you place your iPod/iPhone(Lightning Connector) onto the dock of this unit after Bluetooth connection, the Bluetooth connection is deactivated.
- While using Bluetooth, you may not activate BT app. Disconnect Bluetooth device you have connected before to use BT app properly.
- If you use Bluetooth app for operation, there would be some differences between Bluetooth app and the supplied remote control. Use the supplied remote control as necessary.
- If you operate BT app with Bluetooth device connected, the Bluetooth connection you have connected before may be disconnected. (Depending on the smartphone's O/S, this process has a difference.)
- Depending on the Bluetooth device, BT.app may not work.
- In Bluetooth function, if you use BT app, the supplied remote control may not work.
- When using BT app for remote control, the operation may differ from the supplied remote control.
- Depending on the type of operating system, you have some differences for BT app's operation.
- When your Bluetooth device have been already connected with other unit, disconnect the Bluetooth connection first. Then you can control your player through BT app.
- The connection you've made may be disconnected if you select other application or change the setting of the connected device via BT app. In such case, please check the connection status.
- Don't connect your Apple device by using a cable to USB port. Or else the Bluetooth connection will be disconnected.
- After connection of BT app, music may be output from your device. In this case, try connecting procedure again.
- To prevent a malfunction, you are recommended to connect only one device to this unit.

Troubleshooting

Problem	Correction
No Power.	• Plug in the power cord. • Check the condition by operating other electronic devices.
No sound.	• Press **FUNCTION** or **/ F** and then check the selected function. • Adjust volume of your portable device.
The remote control does not work properly.	• Operate the remote control within about 23 ft (7 m). • Remove the obstacle in the path of the remote control and the unit. • Replace the battery with new one.
iPod/iPhone/iPad does not work.	Connect iPod/iPhone/iPad to the unit correctly.

Trademarks and Licenses



"Made for iPod," "Made for iPhone," and "Made for iPad" mean that an electronic accessory has been designed to connect specifically to iPod, iPhone, or iPad, respectively, and has been certified by the developer to meet Apple performance standards. Apple is not responsible for the operation of this device or its compliance with safety and regulatory standards. Please note that the use of this accessory with iPod, iPhone, or iPad may affect wireless performance.



Bluetooth® wireless technology is a system which allows radio contact between electronic devices within a max. range of 10 meters.

Connecting individual devices under ***Bluetooth***® wireless technology does not incur any charges. A mobile phone with ***Bluetooth***® wireless technology can be operated via the Cascade if the connection was made via ***Bluetooth***® wireless technology.

The ***Bluetooth***® word mark and logos are owned by the ***Bluetooth***® SIG, Inc. and any use of such marks by LG Electronics is under license.

Other trademarks and trade names are those of their respective owners.

Handling the Unit

When Shipping the Unit

Please save the original shipping carton and packing materials. If you need to ship the unit, for maximum protection, re-pack the unit as it was originally packed at the factory.

Keeping the Exterior Surfaces Clean

Do not use volatile liquids such as insecticide spray near the unit.

Wiping with strong pressure may damage the surface.

Do not leave rubber or plastic products in contact with the unit for a long period of time.

Cleaning the Unit

To clean the player, use a soft, dry cloth. If the surfaces are extremely dirty, use a soft cloth lightly moistened with a mild detergent solution. Do not use strong solvents such as alcohol, benzine, or thinner, as these might damage the surface of the unit.

Specifications

General	
AC adapter requirements	DC 12 V ⎓ 2.5 A, 100 -240 V, 50/ 60 Hz
Power consumption	25 W
Dimensions (W x H x D)	275 X 90 X 170 mm
Net Weight (Approx.)	1.3 kg
Operating temperature	5 °C to 35 °C (41 °F to 95 °F)
Operating humidity	5 % to 90 %

Inputs	
PORT. IN	500 mV (3.5 mm stereo jack)

USB	
USB Version	USB 1.1
Bus Power Supply	USB : DC 5 V ⎓ 2.1 A, iPod/iPhone : DC 5 V ⎓ 2.5 A

Amplifier	
Output Power	5 W + 5 W (8 Ω at 1 kHz)
T.H.D	10 %

Speakers	
Type	built-in
Impedance Rated	8 Ω
Rated Input Power	5 W
Max. Input Power	10 W

- Design and specifications are subject to change without notice.

ND2530-BS.BGBRLLK_ENG_7550.indd 20 2013-03-26 3:27:54

ND2530-BS.BGBRLLK_ENG_7550.indd 21 2013-03-26 3:27:54

ND2530-BS.BGBRLLK_ENG_7550.indd 22 2013-03-26 3:27:54

Life's Good

Technology with the human touch

GUARANTEE

- LG Electronics U.K. Ltd. will provide the following services in order toexpedite this Guarantee.

1. All faulty components which fail due to defective manufacture will be replaced free of charge for a period of 12 months from the original date of purchase.
2. The dealer (or his service agent) who sold the product will be reimbursed for any labour provided in the repair of this LG equipment, for a period of 12 months from the original date of purchase. These claims must be made in accordance with the published scale of service charges and relevant claims procedure.

PLEASE NOTE:

A. The dealer may restrict the guarantee to the original purchaser.

B. The dealer is not obliged to carry out service under guarantee if unauthorized modifications are made to the apparatus, or if non standard components are used or if the serial number of the apparatus is removed, defaced, misused, or altered.

C. Any claims made under guarantee must be directed to the dealer from whom the equipment was originally purchased. The dealer may, before carrying out service under guarantee, require a receipted account as evidence of the date of purchase.

D. We respectfully point out that your dealer is not obligated to replace batteries if they become exhausted or worn in use.

E. Aerial alignment and consumer control adjustments are not covered by this guarantee.

This guarantee does not affect your statutory rights.

- REQUIREMENTS TO MAINTAIN WARRANTY COVERAGE:
  RETAIN YOUR RECEIPT TO PROVE DATE OF PURCHASE. A COPY OF YOUR RECEIPT MUST BE SURRENDERED AT THE TIME GUARANTEE SERVICE IS PROVED.
- Product Registration Card :
  It is helpful to complete at least your name, address, phone, model & serial numbers and return it. This will enable LG to assist you in the future should you lose your receipt, your units be stolen, or should modifications be necessary.
- To obtain information or assistance: Call 0870 873 5454 Monday-Friday 9.00am-4.30pm

MODEL NO.*	SERIAL NO.*	DATE OF PURCHASE.*

In all cases of difficulty - consult your LG dealer from whom the product was purchased

LGEUK Website : www.lge.co.uk
(service website : www.lgelectronics.co.uk)



ND2530-BS.BGBRLLK_ENG_7550.indd 24 2013-03-26 3:27:54