LG
Life's Good

ENGLISH

OWNER'S MANUAL

IPS LED MONITOR (LED LCD MONITOR)

Please read the safety information carefully before using the product.

IPS LED Monitor (LED LCD Monitor) Model List

27EA83
27EA83R

www.lg.com

ENGLISH

CONTENTS

3 LICENSE

4 ASSEMBLING AND PREPARING

4 Product composition
4 Separate purchase
5 Component and Button Description
6 Moving and Lifting the Monitor
7 Installing the Monitor
7 - Assembling the stand base
8 - Detaching the stand base
8 - Installing onto a table
9 - Adjusting the stand height
10 - Adjusting the angle
11 - Tidying cables
11 - Pivot feature
12 - Using the Kensington lock
13 - Installing the wall mount plate
13 - Installing to a wall
15 Power Adapter Mount
15 - Mounting the Power adapter
15 - Removing the Power Adapter Mount

16 USING THE MONITOR

16 Connecting to a PC
16 - DVI connection
17 - Display port connection
17 - HDMI connection
18 Connecting to AV Devices
18 - USB 3.0 cable-PC connection
18 - Headphone port connection

19 INSTALLING LG MONITOR SOFTWARE

22 CUSTOMIZING SETTINGS

22 Activating the Main Menu
23 CUSTOMIZING SETTINGS
23 - Menu Settings
24 - Ratio Settings
25 - ECO Settings
26 - Color Mode Settings
27 - PIP settings
28 - Picture
29 - Color
30 - Settings

31 TROUBLESHOOTING

33 SPECIFICATIONS

34 Factory support mode
34 (Preset Mode, DVI-D/HDMI/PC Display Port)
34 HDMI
34 Power Indicator

35 PROPER POSTURE

35 Proper Posture When Using a Monitor

LICENSE

Each model has different licenses. Visit www.lg.com for more information on the license.

The terms HDMI and HDMI High-Definition Multimedia Interface, and the HDMI logo are trademarks or registered trademarks of HDMI Licensing LLC in the United States and other countries.

VESA, VESA logo, Display Port Compliance Logo and Display Port Compliance Logo for dual-mode source are all registered trademarks of the Video Electronics Standards Association.

ENGLISH

ASSEMBLING AND PREPARING

Product composition

Please check whether all the components are included in the box before using the product. If there are missing components, contact the retail store where you purchased the product. Note that the product and components may look different from those shown here.

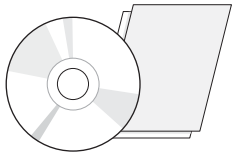

User Manual/Card

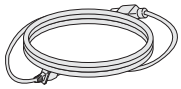

Power Cord

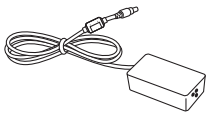

AC/DC Adapter

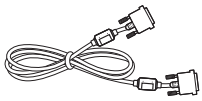

DVI-D Dual Cable

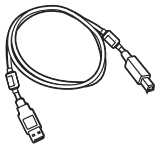

or

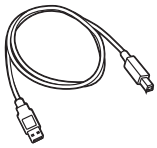

A-B Type USB 3.0 Cable

Display Port Cable

Stand Base

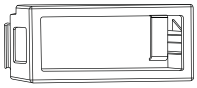

Adapter Management Cover

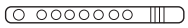

Cable Tie

Separate purchase

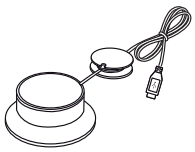

Calibrator (ACB8300)

CAUTION

- Always use genuine components to ensure safety and product performance.
- The product warranty will not cover damage or injury caused by the use of counterfeit components.

NOTE

- Note that the components may look different from those shown here.
- Without prior notice, all information and specifications in this manual are subject to change to improve the performance of the product.
- Separate purchase are not included for all models. To purchase optional accessories, visit an electronics store or online shopping site or contact the retail store where you purchased the product.

Component and Button Description

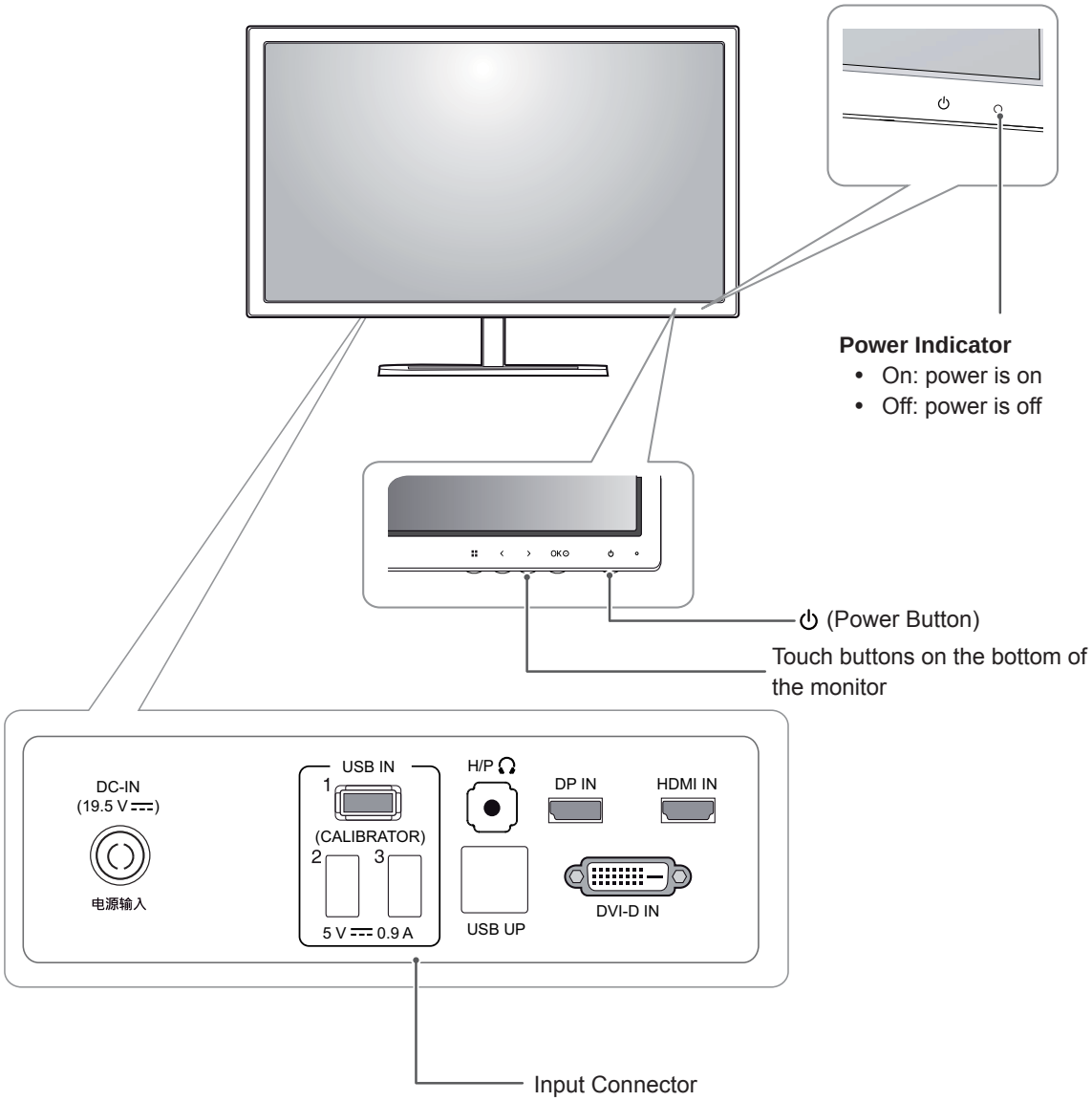

ENGLISH

Moving and Lifting the Monitor

When moving or lifting the monitor, follow these instructions to prevent the monitor from being scratched or damaged and to ensure safe transportation regardless of its shape or size.

CAUTION

- As much as possible, avoid touching the monitor screen. This may result in damage to the screen or some of the pixels used to create images.

- It is advisable to place the monitor in the original box or packing material before attempting to move it.
- Before moving or lifting the monitor, disconnect the power cord and all cables.
- Hold the top and bottom of the monitor frame firmly. Do not hold the panel itself.

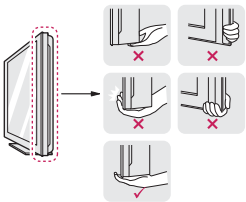

- When holding the monitor, the screen should face away from you to prevent it being scratched.

- When transporting the monitor, do not expose the monitor to jolts or excessive vibration.
- When moving the monitor, keep it upright, never turn the monitor on its side or tilt it sideways.

Installing the Monitor

Assembling the stand base

1 Place the screen face down.

CAUTION

- To protect the screen from scratches, cover the surface with a soft cloth.

2 Rotate **the stand body** 90˚ counterclockwise.

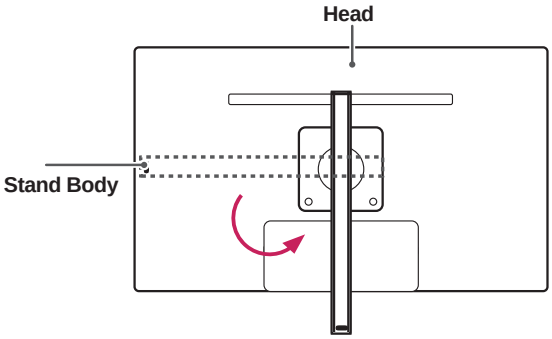

WARNING

- To avoid scratching the head, make sure that when rotating the **stand body**, the stand body does not make contact with the head.

3 Insert the **stand base** into the hook of the **stand body**.

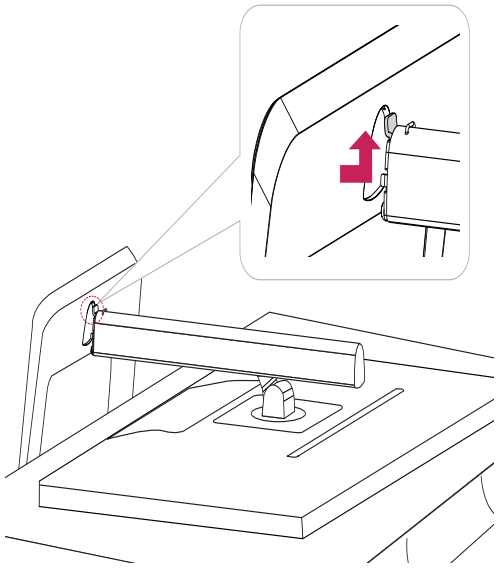

4 Fix by turning the screw to the right with a coin.

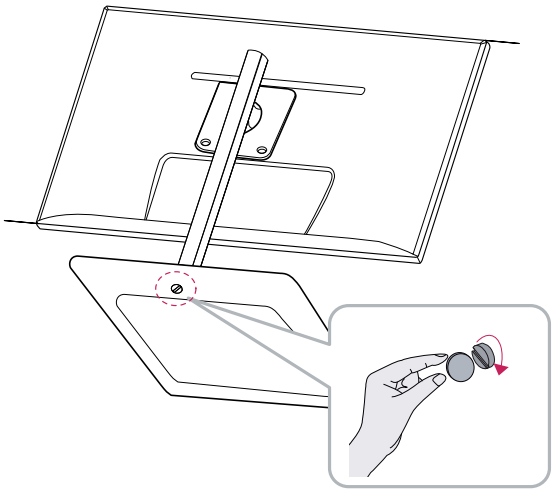

ENGLISH

Detaching the stand base

1 Place the screen face down.

CAUTION

- To protect the screen from scratches, cover the surface with a soft cloth.

2 1 Turn the screw to the left using a coin.
2 Detach the **stand base.**

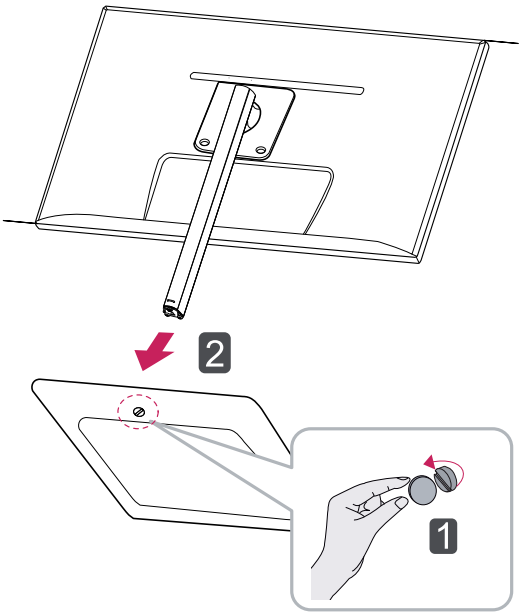

CAUTION

- The components in the illustrations may differ from the actual product.
- Do not carry the monitor upside down, as this may cause it to fall off its stand and result in damage or injury.
- To avoid damaging the screen when lifting or moving the monitor, only hold the stand or the plastic cover. This avoids putting unnecessary pressure on the screen.

Installing onto a table

1 Lift the monitor and place it on the table in an upright position.
Place at least **10 cm** away from the wall to ensure sufficient ventilation.

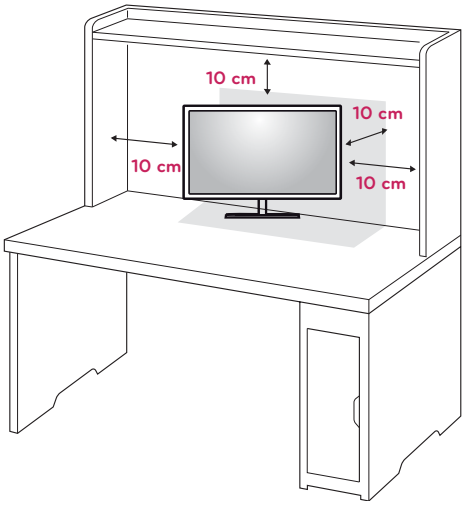

2 Connect the adapter to the monitor, then plug the power cord into the power outlet.

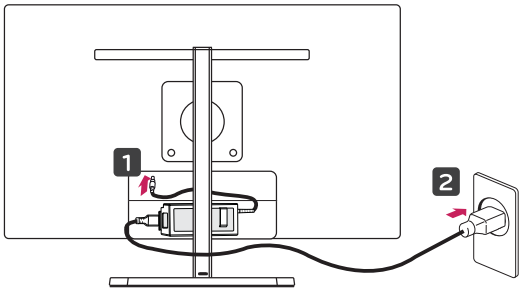

3 Press the ⏻ (Power) button on the bottom of the monitor to turn it on.

CAUTION

- Disconnect the power cord first, and then move or install the Monitor set. There is risk of electric shock.

Adjusting the stand height

1 Place the monitor mounted on the stand base in an upright position.

2 Remove the **tape** attached at the bottom rear of the **stand body,** then pull out the **locking pin**.

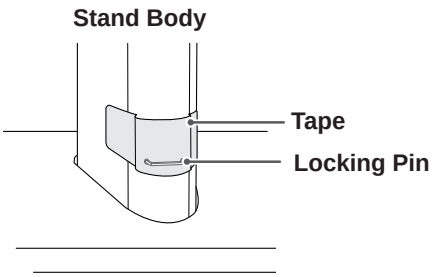

3 Push the **Head** downward and pull out the **Locking Pin**.

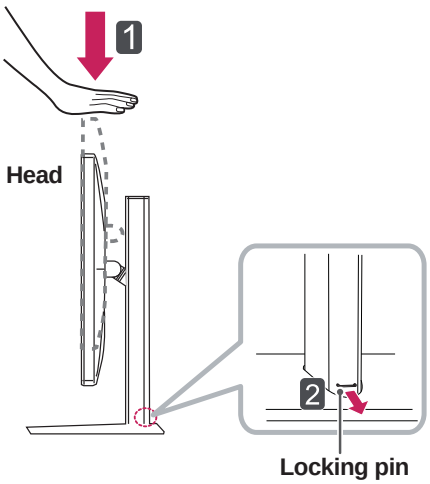

4 The height can be adjusted up to **110.0 mm**.

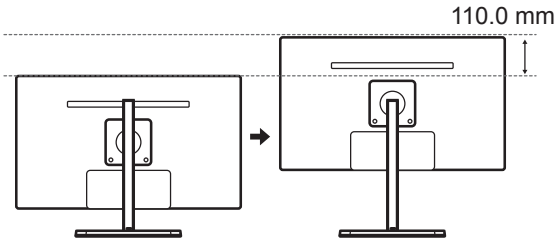

CAUTION

- Once the pin is removed, it is not necessary to re-insert it to adjust the height.

WARNING

- Do not put your fingers or hand between the screen and the base (chassis) when adjusting the screen's height.

Adjusting the angle

1 Place the monitor in an upright position, mounted on the stand base.

2 Adjust the angle of the screen. The angle of the screen can be adjusted forwards or backwards from -5° to 15° for a comfortable viewing experience.

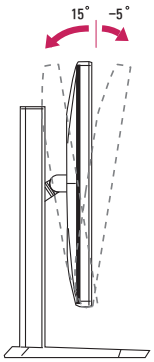

Rear Side **Front Side**

WARNING

- To avoid injury to the fingers when adjusting the screen, do not hold the lower part of the monitor's frame as illustrated below.

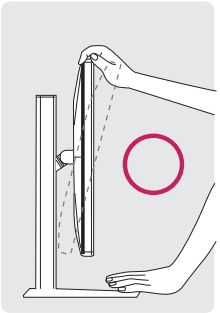

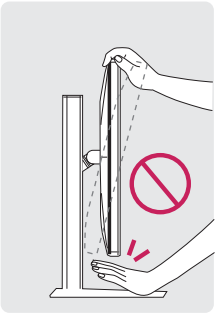

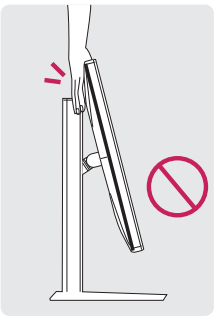

WARNING

- Be careful not to touch or press the screen area when adjusting the angle of the monitor.

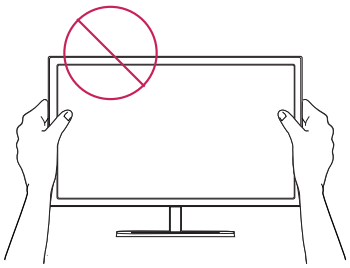

Tidying cables

Gather and bind the cables with the supplied cable tie.

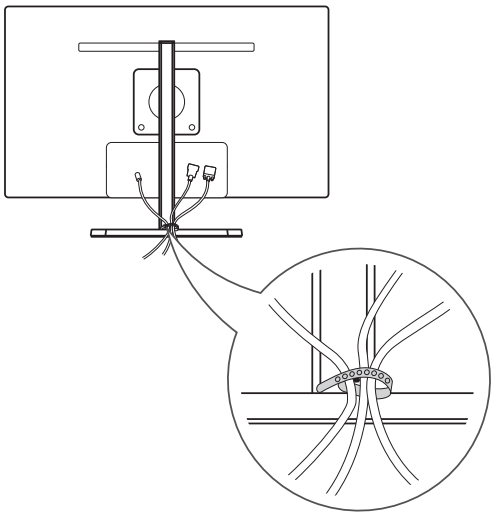

Pivot feature

The pivot feature allows the monitor to rotate 90 clockwise.

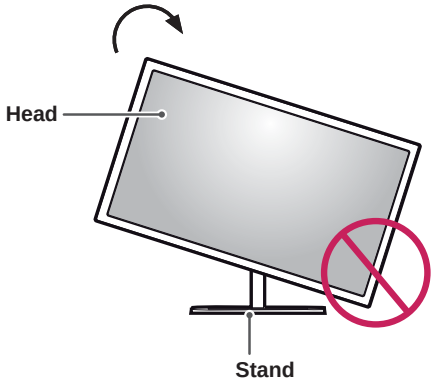

WARNING

- To avoid scratching the stand base, make sure that when rotating the monitor using the pivot feature, the stand does not make contact with the monitor.

1 Raise the monitor up to the maximum height.

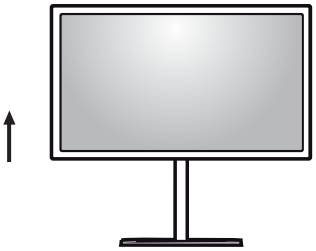

2 Adjust the angle of the monitor in the direction of the arrow as shown in the figure.

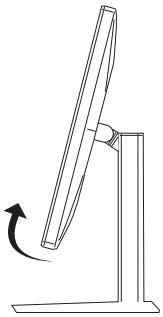

3 Rotate the monitor clockwise as shown in the figure.

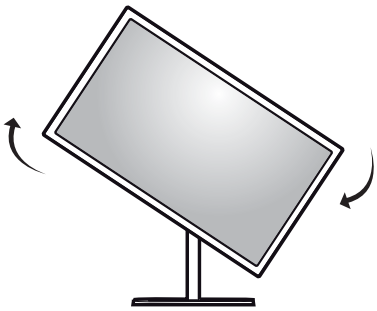

4 Complete the installation by rotating the monitor 90° as shown below.

WARNING

- Take care when rotating the monitor if the cable is connected.

NOTE

- An image displayed on the monitor's screen does not rotate according to the screen orientation.

Using the Kensington lock

The Kensington security system connector is located at the back of the Monitor set.
For more information on installation and usage, refer to the Kensington lock user manual or visit the website at http://www.kensington.com.

Connect the Kensington security system cable between the Monitor set and a table.

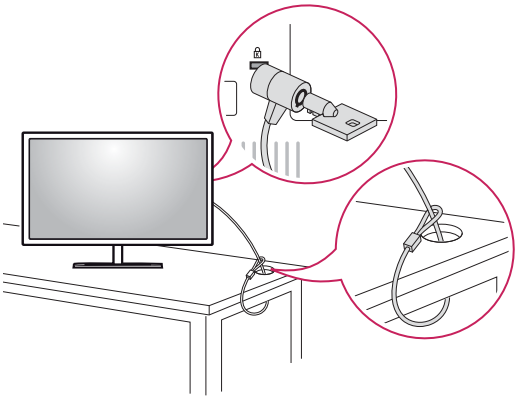

NOTE

- The Kensington security system is optional. You can obtain additional accessories from most electronics stores.

Installing the wall mount plate

This monitor supports the specification of the standard wall mount plate or compatible device.

1 Place the screen face down. To protect the screen from scratches, cover the surface with a soft cloth.

2 Place the wall mount plate onto the monitor and align it with the screw holes.

3 Using a screwdriver, tighten the four screws to attach the plate to the monitor.

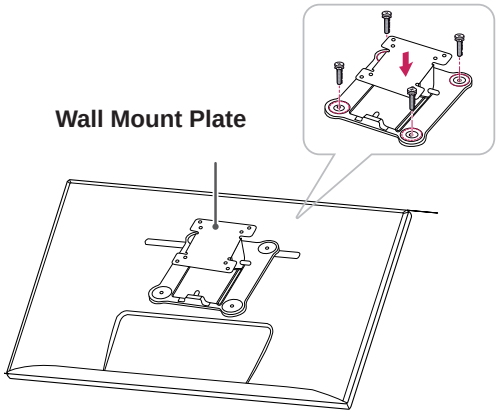

NOTE

- The wall mount plate is sold separately.
- For more information on installation, refer to the wall mount plate's installation guide.
- Be careful not to use excessive force when mounting the wall mount plate, as this can damage the monitor's screen.

Installing to a wall

Install the monitor at least 10 cm away from the wall and leave about 10 cm of space at each side of the monitor to ensure sufficient ventilation. Detailed installation instructions can be obtained from your local retail store. Please refer to the manual to install and set up a tilting wall mounting bracket.

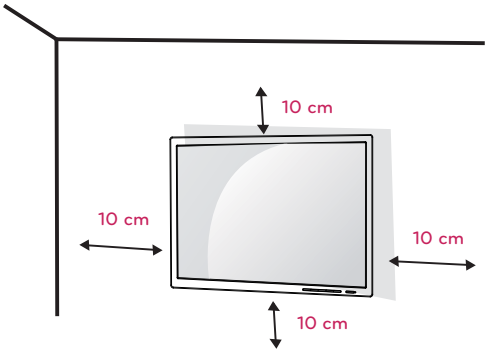

To install the monitor to a wall, attach a wall mounting bracket (optional) to the back of the monitor.
Make sure that the wall mounting bracket is securely fixed to the monitor and to the wall.

1 Use the screws and wall mounting bracket that comply with the VESA standard.
2 Screws which are longer than the standard length may damage the inside of the monitor.
3 A non-VESA standard screw may damage the product and cause the monitor to fall. LG Electronics is not liable for any accidents relating to the use of non-standard screws.
4 The monitor is VESA standard compliant.
5 Use it according to the VESA standard as specified below.
- 784.8 mm or less
  * Thickness of the wall mount plate: 2.6 mm
  * Fastening screw: Diameter 4.0 mm x Pitch 0.7 mm x Length 10 mm
- 787.4 mm or greater
  * Use the wall mount plate and screws that conform to the VESA standard.

Model	27EA83 27EA83R
VESA (A x B)	100 x 100
Stand Screw	M4
Required Screws	4
Wall Mount Plate (Optional)	RW120 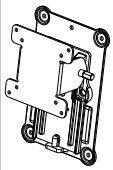

CAUTION

- Unplug the power cord before moving or installing the monitor to avoid electric shocks.
- Installing the monitor on the ceiling or on a slanted wall may result in the monitor falling off, which could lead to injury. Use an authorized LG wall mount installed by qualified personnel.
- Applying excessive force when fastening screws may cause damage to the monitor. Damage caused in this way will not be covered by the product warranty.
- Use the wall mounting bracket and screws that conform to the VESA standard. Damage caused by the use or misuse of inappropriate components will not be covered by the product warranty.

NOTE

- Use the screws specified by the VESA standard.
- The wall mount kit includes the installation guide and all necessary parts.
- The wall mounting bracket is optional. The accessories can be purchased at your local retail store.
- The length of the screw may differ for each wall mounting bracket. Be sure to use the proper length.
- For more information, please refer to the user manual for the wall mounting bracket.

CAUTION

- Do not adjust the angle of the monitor in the direction of the arrow shown in the figure below when mounting it onto a wall.
  Avoid damage to the screen when adjusting the angle.

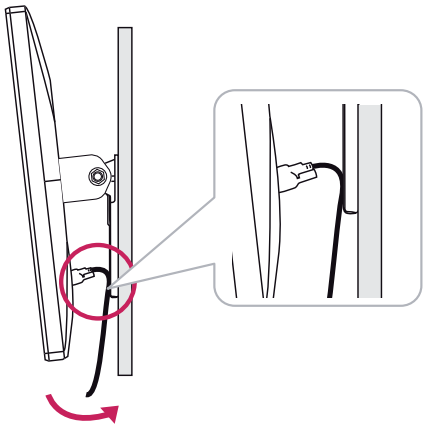

Power Adapter Mount

Mounting the Power adapter

1 Insert the adapter into the adapter management cover.

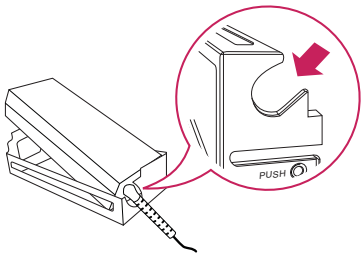

2 Insert the adapter management cover into groove 1 and then slide it into groove 2.

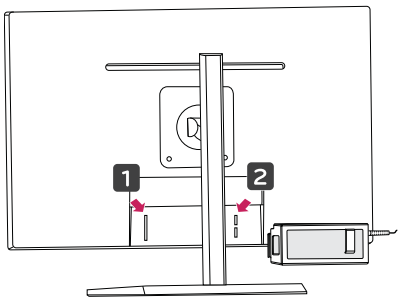

3 Connect the power cord.

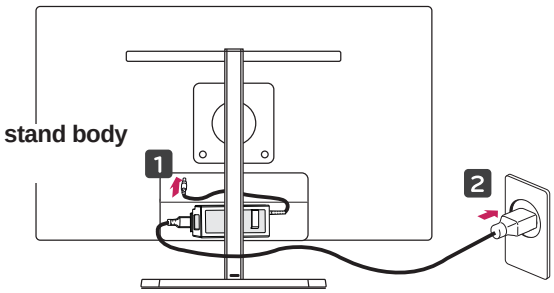

CAUTION

- To prevent the power cable from being entangled when using the pivot feature, place the power cable between the stand body and the monitor.

Removing the Power Adapter Mount

1 Disconnect the power cord.

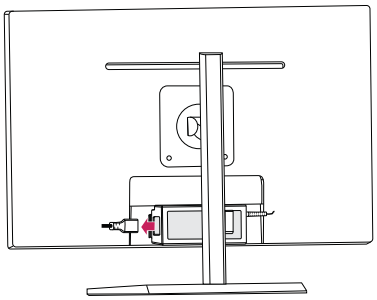

2 Press PUSH to remove the adapter management cover from the back of the monitor.

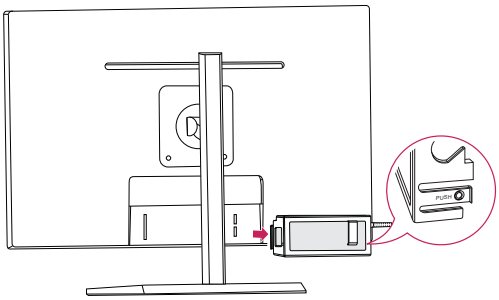

3 Pull the adapter out of the adapter management cover.

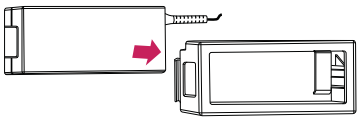

CAUTION

- When assembling or disassembling the adapter cover, you may leave scratches on the back cover and the management cover.

ENGLISH

USING THE MONITOR

Connecting to a PC

- This monitor supports the *Plug and Play feature.
  *Plug and Play: A feature that allows you to add a device to your computer without having to reconfigure anything or install any manual drivers.

DVI connection

Transmits digital video signals to the monitor. Connect the monitor using the DVI cable as illustrated below.
Press the menu (⠿) button and then select the input option from the input menu.

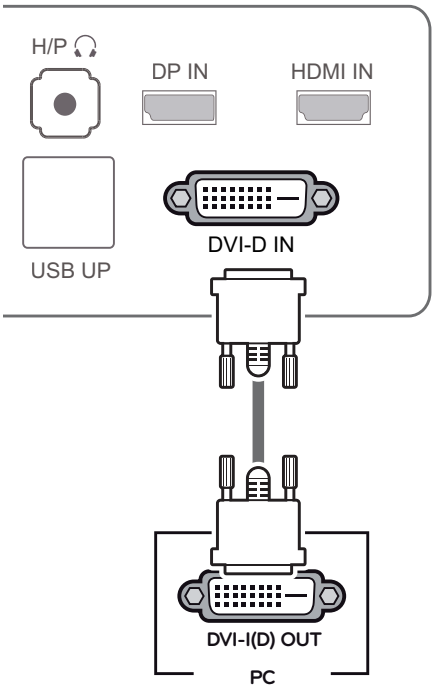

CAUTION

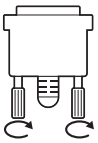

- Connect the input signal cable and turn in the direction of the arrow. To prevent disconnection secure the cable tightly.
- Do not press on the screen for a prolonged period of time. This may cause image distortion.
- Do not display a still image on the screen for a prolonged period of time. This may cause image retention. Use a screensaver if possible.

NOTE

- When connecting the power cord to the outlet, use a grounded (3-hole) multi-socket or a grounded power outlet.
- The monitor may flicker when turned on in an area of low temperature. This is normal.
- Sometimes red, green, or blue spots may appear on the screen. This is normal.

Display port connection

Transmits the digital video and audio signals from your PC to the monitor. Connect your PC to the monitor using the display port cable as illustrated below.
Press the menu (⊞) button and then select the input option from the input menu.

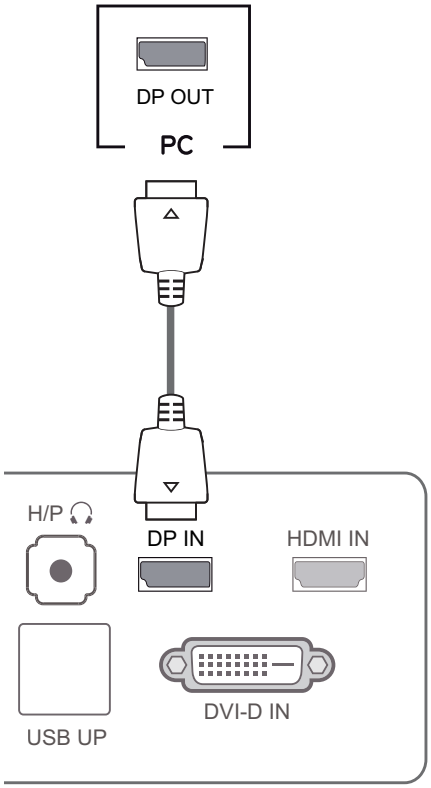

NOTE

- Sound may not be available depending on the DP version of your PC.

HDMI connection

Transmits the digital video and audio signals from your PC and A/V devices to the monitor. Connect your PC and AV device to the monitor with the HDMI cable as illustrated below.
Press the menu (⊞) button and then select the input option from the input menu.

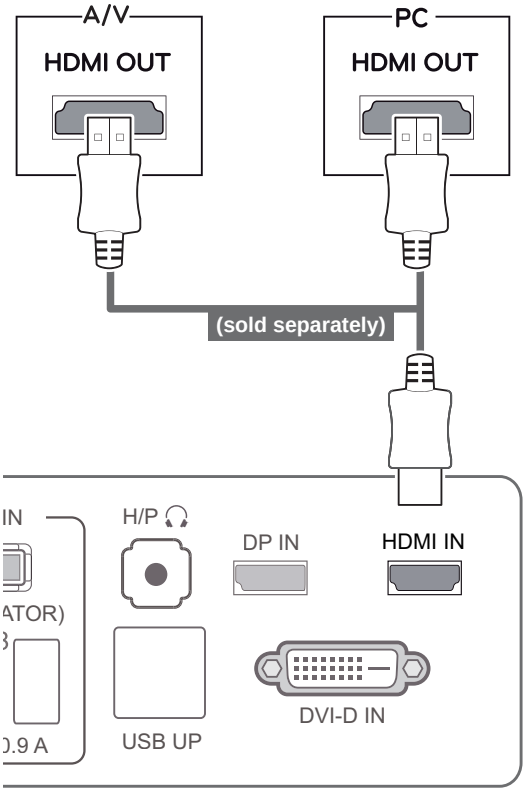

NOTE

- HDMI PC may cause device compatibility issues.

ENGLISH

Connecting to AV Devices

USB 3.0 cable-PC connection

The USB 3.0 function acts as a USB hub on the product.
To use USB 3.0, connect the A-B type USB 3.0 cable included with the product to the PC.
Peripheral devices connected to the USB IN port can be controlled from the PC.

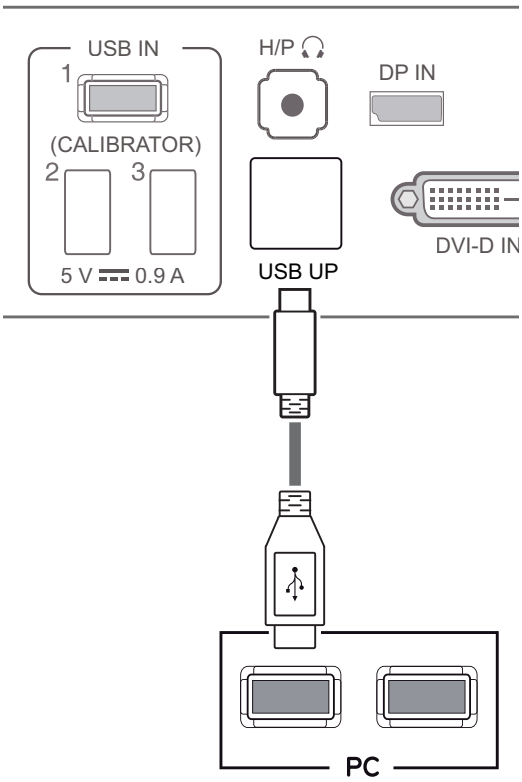

NOTE

- Please install the latest Windows service pack before use.

Headphone port connection

Use the headphone port to connect a peripheral device to the monitor. Connect as illustrated.

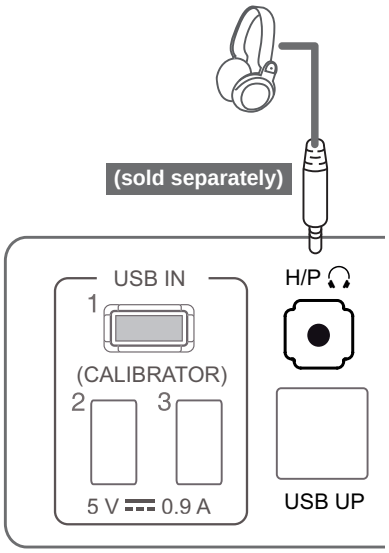

NOTE

- Peripheral devices are sold separately.
- The USB 3.0 ports can be used to connect the keyboard, mouse, and other USB devices.
- For an angle plug earphone, it is difficult connect it with a peripheral device, so use a straight type.

Angle Type

Straight Type

NOTE

- Depending on the audio settings of the PC and external device, headphone and speaker functions may be limited.

INSTALLING LG MONITOR SOFTWARE

Insert the the owner's manual CD included in the product package into your PC's CD driver and install the LG Monitor Software.

1 Set the default Web browser to Internet Explorer.

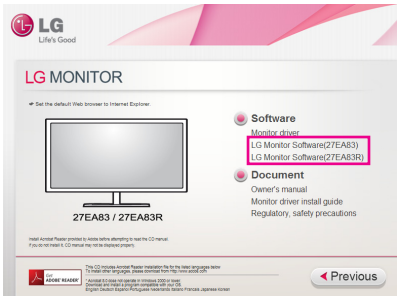

2 Click the "LG Monitor Software" on the CD's main screen. When the file download window appears, click the Run button. (The file download window may vary depending on the operating system and the Internet Explorer version, but the installation procedures are same.)

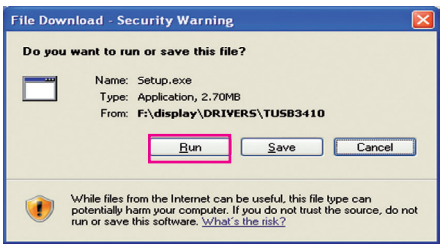

CAUTION

- Service Pack 1 or higher is required for Window 7.

3 Follow the instructions to proceed with the installation.

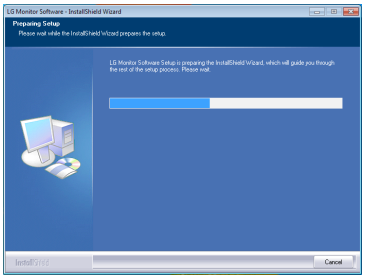

4 Check "I accept the terms of the agreement" on the License Agreement screen and then click the [Next] button.

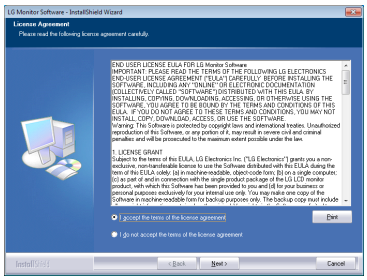

5 Select the program that you want to install.

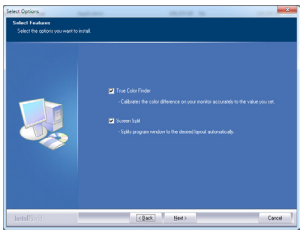

<27EA83R>

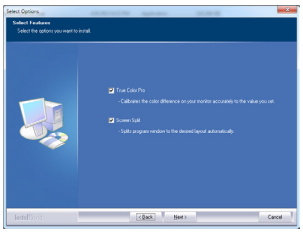

<27EA83>

NOTE

- Screen Split: This program automatically splits the program window as desired.
- True Color Finder/Pro: This program calibrates the precise color output of the monitor to suit your needs.

6 The LG Monitor Software installation starts as shown below.

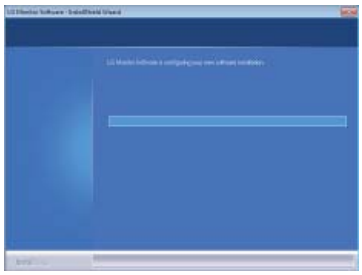

7 If the TUSB3410 driver has not been installed, it will install automatically. Select "Install this driver software anyway (I)" if the Windows security message is displayed as below.

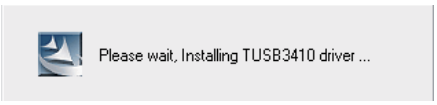

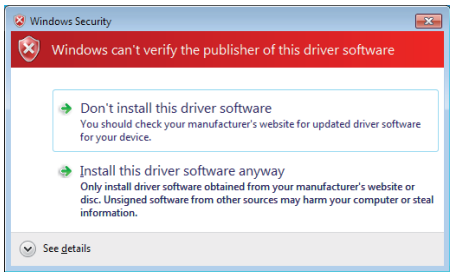

8 The program you selected on the Select Features page will install automatically.

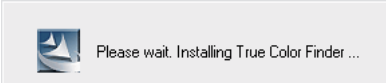

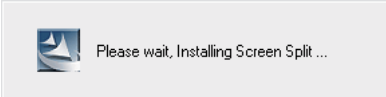

9 When the installation is complete, restart your system.

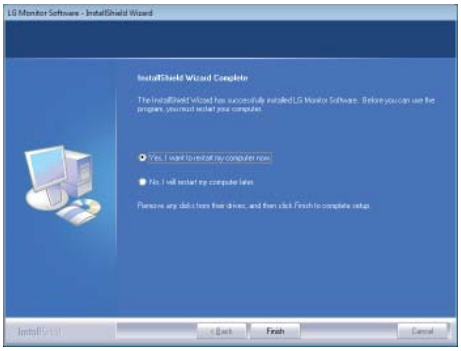

NOTE

When you run the True Color Finder software, the True Color Finder icon [ ] appears in the system tray at the right bottom of the PC screen.

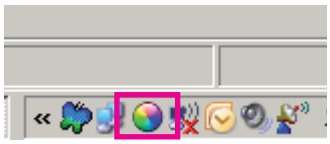

Right-click the True Color Finder icon and select "Start Program" to start the program.

CAUTION

- Once you have completed the monitor calibration with the True Color Finder software, remove the calibrator from the monitor and store it at room temperature away from direct sunlight or put it in the box.
  - If the calibrator's measuring part is exposed to direct sunlight for a long time, this may cause damage to the calibrator.
  - Do not store it in an environment with too low/high temperature and high humidity.
- If any third-party calibration application is already installed on your PC, the image quality may be affected by a conflict between the two applications. For the best performance, it is recommended to uninstall the other calibration application.

NOTE

- To use the True Color Finder function, you must purchase the supported calibrator.
- For details on supported calibrators and graphic cards, see the True Color Finder user guide.
- If you have changed the input port, it is recommend that you calibrate the monitor's picture quality again.

NOTE

If you run Screen Split, the Screen Split icon [ ] appears in the system tray at the right bottom of the PC screen.

Right-click the Screen Split icon and select a layout you want.

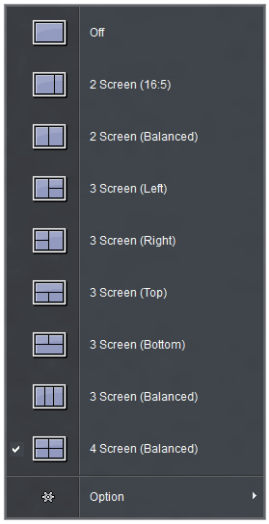

ENGLISH

CUSTOMIZING SETTINGS

Activating the Main Menu

1 Press the **Menu** (⊞) button.

2 Use the **<**, **>** button to adjust the options.

To return to the upper menu or set other menu items, use the **Menu** (⊞) button.

3 Press and hold the **Menu** (⊞) button to exit the OSD menu.

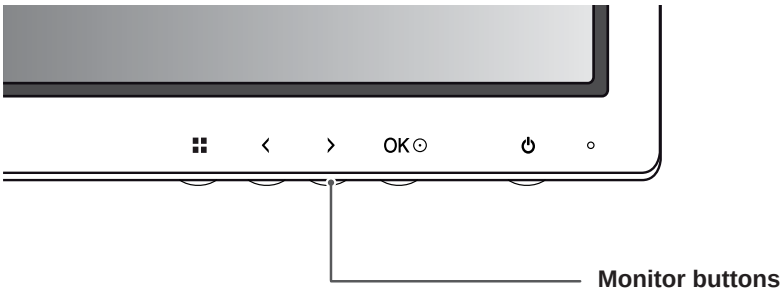

Button	Description	
Menu (⊞)	**If the menu is inactive**	Activates the main menu.
	If the menu is active	Goes to the previous screen when the button is pressed; exits the OSD menu when the button is pressed and held for over 3 seconds.
<	**If the menu is inactive**	Adjusts the volume level of the monitor.
	If the menu is active	Left directional key
>	**If the menu is inactive**	Adjusts the volume level of the monitor.
	If the menu is active	Right directional key
OK ⊙	If the menu is active: pressing OK selects the function. If the menu is inactive: pressing OK shows the resolution of the current signal (only when there is input signal).	
⏻ (Power Button)	Powers on or off.	
	Power Indicator	When the monitor is in operating mode, the power indicator will turn red (on mode). When the monitor is in power-saving mode, the power indicator will blink red.

NOTE

All of the buttons are touch sensitive and can be operated by simply touching them on the bottom front of the monitor with your finger.

CUSTOMIZING SETTINGS

Menu Settings

1 To view the menu OSD, press the **Menu** (▦) button at the bottom of the monitor.

2 Use the < or > button to set the options.

3 Select ✕ to exit the OSD menu.
To return to the upper menu or set other menu items, use the **Menu** (▦) button.

Brightness **Contrast** **Volume** **Input** **Ratio** **ECO** **Color Mode**

PIP **Picture** **Color** **Settings** **Reset** **Exit**

Each option is described below.

Menu	Description
Brightness	Adjusts the brightness and contrast of the screen.
Contrast	
Volume	Adjusts the volume.
	NOTE • The volume is disabled in the DVI input mode. • Selecting the OK button in the Volume menu will enable/disable the Mute function.
Input	Selects the current input mode.
Wide/Original	Adjusts the screen ratio.
ECO	Enables or disables the ECO function.
Color Mode	Sets to Custom, sRGB, Adobe RGB(Only 27EA83 model) or Calibration.
PIP	Displays the screens of two input modes on one monitor.
Picture	Adjusts the sharpness, black level, and response time of the screen.
Color	Adjusts the gamma, color temperature and color balance of the screen
Settings	Sets the language, main audio, button tone, power indicator, DP 1,2 and OSD lock.
Reset	Resets to the default settings as of the day of purchase. Press the < or > button to reset immediately.
Exit	Exits the OSD menu.

ENGLISH

Ratio Settings

1 To view the menu OSD, press the **Menu** (▦) button at the bottom of the monitor.

2 Press < or > to go to **Ratio**.

3 Press **OK** to select **Ratio**.

4 Use the < or > button to set the options.

5 Select ✕ to exit the OSD menu.
To return to the upper menu or set other menu items, use the **Menu** (▦) button.

Ratio

Sub Menu

Wide **Original** **1:1** **Back** **Exit**

Each option is described below.

Menu > Ratio	Description
Wide	Displays the video in wide-screen, regardless of the video signal input.
Original	Displays a video according to the input video signal aspect ratio.
1:1	The aspect ratio is not adjusted from the original.
Back	Moves to the previous OSD screen.
Exit	Exits the OSD menu.

NOTE

- The display may look the same for Wide, Original and 1:1 options at the recommended resolution (2560 x 1440).
- The ratio is disabled in the interlaced signal.

ECO Settings

1 To view the menu OSD, press the **Menu** (▦) button at the bottom of the monitor.

2 Press < or > to go to **ECO**.

3 Press **OK** to select **ECO**.

4 Use the < or > button to set the options.

5 Select ✕ to exit the OSD menu.
To return to the upper menu or set other menu items, use the **Menu** (▦) button.

ECO

Sub Menu

On **Off** **Back** **Exit**

Each option is described below.

Menu > ECO	Description	
ECO	**On**	Enables the ECO function, which allows you to save energy according to the ECO efficiency level.
	Off	Disables the ECO function.

ENGLISH

Color Mode Settings

1 To view the menu OSD, press the **Menu** (▦) button at the bottom of the monitor.

2 Press < or > to go to **Color Mode.**

3 Press **OK** to select **Color Mode.**

4 Use the < or > button to set the options.

5 Select ✕ to exit the OSD menu.
To return to the upper menu or set other menu items, use the **Menu** (▦) button.

Color Mode

Sub Menu

Custom **sRGB** **AdobeRGB (Only 27EA83 model)** **Calibration** **Back** **Exit**

Each option is described below.

Menu > Color Mode	Description
Custom	Allows the user to adjust each element. The color mode of the main menu can be adjusted.
sRGB	A standard RGB color space for the monitor and printer.
AdobeRGB (Only 27EA83 model)	A much larger color space than sRGB. This option is suitable for printing pictures.
Calibration	Applies the value calibrated by True Color Pro/Finder.
	NOTE Run the True Color Pro/Finder program.
Back	Moves to the previous OSD screen.
Exit	Exits the OSD menu.

PIP settings

1 To view the **menu** OSD, press the Menu (▦) button at the bottom of the monitor.

2 Press < or > to go to **PIP.**

3 Press **OK** to select **PIP**.

4 Use the < or > button to set the options.

5 Select ✕ to exit the OSD menu.
To return to the upper menu or set other menu items, use the **Menu** (▦) button.

PIP

Sub Menu

PIP **Size** **Position** **Back** **Exit**

Each option is described below.

Menu > PIP	Description	
PIP	Displays the screens of two input modes on one monitor. (DVI+DP, HDMI+DP, DP+DVI, DP+HDMI)	
Size	Adjusts the size of the secondary screen.	
	Balanced	Uses a balanced size for the secondary screen.
	Small	Shows the secondary screen in a small size display.
	Medium	Shows the secondary screen in a normal size display.
	Large	Shows the secondary screen in a large size display.
Position	Adjusts the position of the secondary screen. The default value is Bottom Right.	
	Bottom Right	Shows the secondary screen in the bottom right of the display.
	Bottom Left	Shows the secondary screen in the bottom left of the display.
	Top Left	Shows the secondary screen in the top left of the display.
	Top Right	Shows the secondary screen in the top right of the display.
Back	Moves to the previous OSD screen.	
Exit	Exits the OSD menu.	

NOTE

- If the PIP mode is off, Position is disabled.
- If Size is set to Balance, Position is disabled.

ENGLISH

Picture

1 To view the menu OSD, press the **Menu** (▦) button at the bottom of the monitor.

2 Press < or > to go to **Picture.**

3 Press **OK** to select **Picture.**

4 Use the < or > button to set the options.

5 Select ✕ to exit the OSD menu.
To return to the upper menu or set other menu items, use the **Menu** (▦) button.

Picture

Sub Menu

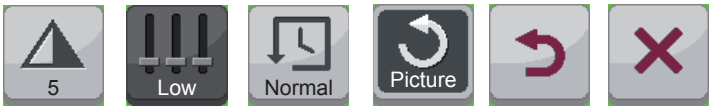

Sharpness **Black Level** **Response Time** **Reset** **Back** **Exit**

Each option is described below.

Menu > Picture	Description	
Sharpness	Adjusts the sharpness of the screen.	
Black Level	Sets the offset level (for HDMI only). • **Offset:** as a reference for a video signal, this is the darkest color the monitor can display.	
	High	The picture of the screen gets brighter.
	Low	The picture of the screen gets darker.
Response Time	Sets a response time for displayed pictures based on the speed of the screen. For a normal environment, it is recommended that you use Normal. For a fast-moving picture, it is recommended that you use High. Setting to High may cause image sticking.	
	High	Sets the response time to High.
	Middle	Sets the response time to Middle.
	Low	Sets the response time to Low.
Reset	Resets the picture function to the default settings.	
Back	Moves to the previous OSD screen.	
Exit	Exits the OSD menu.	

Color

1 To view the menu OSD, press the **Menu** (▦) button at the bottom of the monitor.

2 Press < or >to go to **Color.**

3 Press **OK** to select **Color.**

4 Use the < or > button to set the options.

5 Select ✕ to exit the OSD menu.
To return to the upper menu or set other menu items, use the **Menu** (▦) button.

Color

Sub Menu

Gamma **Color Temp** **Red** **Green** **Blue** **Six Color** **Reset** **Back** **Exit**

Each option is described below.

Menu > Color	Description	
Gamma	Custom gamma setting: When using the gamma 0, gamma 1, and gamma 2 monitor settings, higher gamma settings mean a brighter image is displayed and vice versa.	
Color Temp	**User**	
	• Red • Green • Blue	You can customize the picture color using Red, Green, and Blue colors.
	Selects the factory default picture color. **Warm**: Sets the screen color to a reddish tone. **Medium**: Sets the screen color between a red and blue tone. **Cool**: Sets the screen color to a bluish tone.	
Six Color	Meets the user requirements for colors through adjusting the color and saturation of the six colors (red, green, blue, cyan, magenta, yellow) and saving the settings.	
	Hue	Adjusts tone of the screen.
	Saturation	Adjusts the saturation of the screen colors. The lower the value, less saturated and bright the colors become. The higher the value, the more saturated and dark the colors become.
Reset	Returns the color settings to the default settings.	
Back	Moves to the previous OSD screen.	
Exit	Exits the OSD menu.	

ENGLISH

Settings

1 To view the menu OSD, press the **Menu** (▦) button at the bottom of the monitor.

2 Press < or > to go to **Settings.**

3 Press **OK** to select **Settings.**

4 Use the < or > button to set the options.

5 Select ✕ to exit the OSD menu.
To return to the upper menu or set other menu items, use the **Menu** (▦) button.

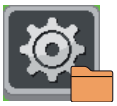
Settings

Sub Menu

Language **Main Audio** **Button Sound** **Power LED** **DP1.2** **OSD Lock** **Back** **Exit**

Each option is described below.

Menu > Settings	Description	
Language	Sets the menu screen to the desired language.	
Main Audio	Outputs the sound through the monitor's headset connected the digital input (HDMI and Display Port).	
	NOTE When DVI + DP is selected, the main audio is automatically set to DP.	
Button Sound	Controls the button tone. The button tone is heard for the following actions. DC Power On/Off Menu OSD On/Off	
Power LED	Turns the power indicator on the front side of the monitor on/off.	
	On	The power indicator is automatically turned on.
	Off	The power indicator is turned off.
DP1.2 (DisplayPort1.2)	Activates or deactivates DisplayPort 1.2.	
	NOTE Make sure to activate or deactivate according to the DisplayPort version supported by the graphics card. Set it to off if it is not compatible with the graphics card.	
	On	DisplayPort 1.2 is activated.
	Off	DisplayPort 1.2 is deactivated.
OSD Lock	Prevents incorrect key input.	
	On	Key input is disabled.
	Off	Key input is enabled.
	NOTE All functions except for the OSD Lock mode and the Exit button for Brightness, Contrast, Volume, Input, and Settings are disabled.	
Back	Moves to the previous OSD screen.	
Exit	Exits the OSD menu.	

TROUBLESHOOTING

Nothing is displayed on the screen.	
Is the monitor's power cord plugged in?	• Check if the power cord is correctly plugged in to the power outlet.
Is the power indicator on?	• Check the power indicator.
Is the power indicator displaying red?	• Check that the connected input is enabled (Menu - Input).
Is the power indicator blinking?	• If the monitor is in power-saving mode, move the mouse or press any key on the keyboard to switch the display on. • Check if the computer is turned on.
Is the "OUT OF RANGE" message displayed?	• This occurs when signals transferred from the PC (video card) are out of the horizontal or vertical frequency range of the monitor. Please see the "Product Specification" section of this manual to set the appropriate frequency.
Is the "CHECK SIGNAL CONNECTION" message is displayed?	• This is displayed when the signal cable between the PC and the monitor is missing or disconnected. Check the cable and reconnect.

The "OSD LOCKED" message is displayed.	
Are some functions unavailable when pressing the Menu button?	• The OSD is locked. Go to Menu > Settings and set "OSD Lock" to Unlock.

The screen retains an image.	
Does image sticking occur even when the monitor is turned off?	• Displaying a still image for a prolonged time may cause damage to the screen, resulting in the retention of the image. • Use a screen saver to protect the screen when using the monitor for a prolonged period of time.

NOTE

- **Vertical Frequency**: In order to display an image, the screen must be refreshed dozens of times per second like a fluorescent lamp.
  The number of times the screen is refreshed per second is called vertical frequency or refresh rate and is represented by Hz.
- **Horizontal Frequency**: The time it takes to display one horizontal line is called the horizontal cycle. The number of horizontal lines displayed in one second can be calculated by dividing one by the horizontal cycle. This is called horizontal frequency and is represented by kHz.

NOTE

- Check if the video card's resolution or frequency is within the range allowed by the monitor and set to the recommended (optimal) resolution in **Control Panel > Display > Settings.**
- Failing to set the video card to the recommended (optimal) resolution may result in blurred text, a dimmed screen, a truncated display area or misalignment of the display.
- The configuration procedure may differ depending on your computer and/or operating system. Also, some video cards may not support certain resolutions. If this is the case, contact the manufacturer of the computer or video card for assistance.

The display color is abnormal.	
Does the display appear discolored (16 color)?	• Set the color to 24 bit (true color) or higher. In Windows, go to Control Panel > Display > Settings > Color Quality.
Does the display color appear unstable or in monochrome?	• Check if the signal cable is connected properly. Reconnect the cable or reinsert the PC's video card.
Are there spots on the screen?	• When using the monitor, pixilated spots (red, green, blue, white or black) may appear on the screen. This is normal for the LCD screen. It is not an error nor is it related to the monitor's performance.

SPECIFICATIONS

LCD Screen	Type	68.47 cm TFT (Thin Film Transistor) LCD (Liquid Crystal Display) Screen Diagonal length of the screen: 68.47 cm
	Pixel Pitch	0.2331 mm x 0.2331 mm
Resolution	Maximum Resolution	2560 x 1440 @ 60 Hz
	Recommended Resolution	2560 x 1440 @ 60 Hz
Video Signal (Video Signal)	Horizontal Frequency	30 kHz to 90 kHz
	Vertical Frequency	57 Hz to 75 Hz
	Synchronization	Separate Sync.
Input Connector	DVI-D, HDMI, Display Port, H/P Out, USB UP (USB 3.0), USB IN (USB 3.0)	
Power	Voltage	19.5 V ⎓ 4.2 A
	27EA83 - Power consumption (Typ.)	On Mode: 70 W Power Saving Mode ≤ 0.5 W Off Mode ≤ 0.5 W
	27EA83R - Power consumption (Typ.)	On Mode: 50 W Power Saving Mode ≤ 0.5 W Off Mode ≤ 0.5 W
Dimension	Monitor Size (Width x Height x Depth)	
	With stand	643 mm x 459.4 mm x 225.4 mm
	Without Stand	643 mm x 381.2 mm x 37.6 mm
Weight (Without Packaging)	**27EA83** : 7.3 kg **27EA83R** : 7.0 kg	
AC/DC adapter	AAM-00 type, manufactured by AMPOWER Technology., Co.Ltd. Output: 19.5 V ⎓ 5.65 A	
Stand Angle Adjustment	Forwards/Backwards: -5° to 15° (Head)	
Environmental Conditions	Operating Condition	Temperature: 10°C to 35°C; Humidity: 10% to 80%
	Storing Condition	Temperature: -20°C to 60°C; Humidity: 5% to 90%

The specifications are subject to change without notice.

Factory support mode (Preset Mode, DVI-D/HDMI/PC Display Port)

Preset Mode, PC	Horizontal Frequency (kHz)	Vertical Frequency (Hz)	Polarity (H/V)	Remarks
720 x 400	31.468	70.08	-/+	
640 x 480	31.469	59.94	-/-	
640 x 480	37.5	75	-/-	
800 x 600	37.879	60.317	+/+	
800 x 600	46.875	75	+/+	
1024 x 768	48.363	60	-/-	
1024 x 768	60.123	75.029	+/+	
1152 x 864	67.5	75	+/+	
1280 x 1024	63.981	60.02	+/+	
1280 x 1024	79.976	75.025	+/+	
1680 x 1050	65.29	59.954	-/+	
1600 x 1200	75	60	+/+	
1920 x 1080	67.5	60	+/-	
1920 x 1200	74.038	59.950	+/-	
2560 x 1440	88.79	59.95	+/-	

HDMI

Preset Mode, PC	Horizontal Frequency (kHz)	Vertical Frequency (Hz)
480P	31.50	60
576P	31.25	50
720P	37.50	50
720P	45.00	60
1080i	28.12	50
1080i	33.75	60
1080P	56.25	50
1080P	67.50	60

Power Indicator

Mode	LED Color
On Mode	Red
Power-saving	Blinking in red
Off Mode	Off

PROPER POSTURE

Proper Posture When Using a Monitor

Adjust the screen so that you can comfortably look at it at a slight downward angle from your natural eye level.

- Take a break for approximately 10 minutes every hour to reduce any fatigue caused by long-time usage.
- The stand of the touch monitor allows the product to be used in the optimum position.
  Adjust the stand angle from -5° to 15° to obtain the best view of the screen.

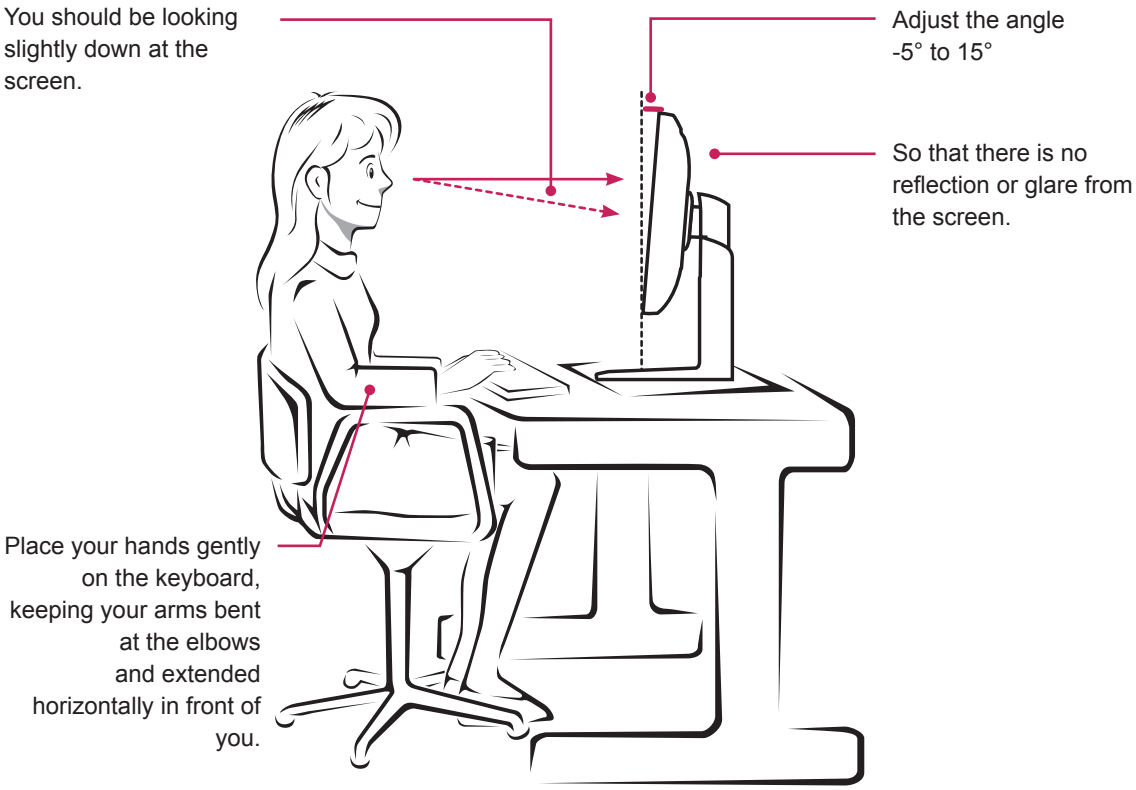

LG
Life's Good

ENERGY STAR is a set of power-saving guidelines issued by the U.S.Environmental Protection Agency(EPA).

As an ENERGY STAR Partner LGE U. S. A.,Inc. has determined that this product meets the ENERGY STAR guidelines for energy efficiency.

This device meets the EMC requirements for home appliances (Class B) and is intended for home usage.
This device can be used in all regions.
Read the owner's manual (CD) carefully and keep it at hand.
The product label contains necessary information for after-service.

Model _____

Serial No. _____

NOTE

- ENERGY STAR(EPA) can not be supported in 27EA83 model.

	ENERGY STAR(EPA) support
27EA83R	o
27EA83	x