Internal Use Only

http://biz.lgservice.com

Air Conditioner
SVC MANUAL(General)

CAUTION

Before Servicing the unit, read the safety precautions in General SVC manual.
Only for authorized service personnel.

TABLE OF CONTENTS

Part 1 General Information 3
1. Safety Precautions 4
2. Model Line Up 7
3. Nomenclature 9

Part 2 Functions & Controls 10
1. List of Functions & Accessory 11
2. Air Flow 15
3. Air Purifying 17
4. Installation Functions 18
5. Reliability 24
6. Convenience Functions & Controls 25
7. Special Function & KIT 33

Part 3 Basic Control 36
1. Normal operation 37
2 Compressor control 37
3. EEV(Electronic Expansion Valve) control 37

Part 4 Trouble Shooting Guide 38
1. Self-diagnosis Function 39
2. Pump Down 41
3. Evacuation (All amount of refrigerant leaked) 42
4. Gas Charging (After Evacuation) 43
5. Cycle Part 44
6. Electronic Parts 45

Copyright ©2013 LG Electronics. Inc. All right reserved.
Only for training and service purposes

LGE Internal Use Only

Part 1 General Information

1. Safety Precautions 4

2. Model Line Up 7

3. Nomenclature.....10

Copyright ©2013 LG Electronics. Inc. All right reserved.
Only for training and service purposes

LGE Internal Use Only

1. Safety Precautions

To prevent injury to the user or other people and property damage, the following instructions must be followed.

■ Incorrect operation due to ignoring instruction will cause harm or damage. The seriousness is classified by the following indications.

⚠WARNING	This symbol indicates the possibility of death or serious injury.
⚠CAUTION	This symbol indicates the possibility of injury or damage to properties only.

■ Meanings of symbols used in this manual are as shown below.

	**Be sure not to do.**
	**Be sure to follow the instruction.**
	**Dangerous Voltage**

1.1 Cautions in Repair

⚠WARNING	
Be sure to disconnect the power cable plug from the plug socket before disassembling the equipment for a repair.Internal components and circuit boards are at main potential when the equipment is connected to the power cables. This voltage is extremely dangerous and may cause death or severe injury if come in contact with it.	
Do not touch the discharging refrigerant gas during the repair work. The discharging refrigerant gas.The refrigerant gas can cause frostbite.	
Release the refrigerant gas completely at a well-ventilated place first. Otherwise, when the pipe is disconnected, refrigerant gas or refrigerating machine oil discharges and it Can cause injury.	
When the refrigerant gas leaks during work, execute ventilation. If the refrigerant gas touches to a fire, poisonous gas generates. A case of leakage of the refrigerant and the closed room full with gas is dangerous because a shortage of oxygen occurs. Be sure to execute ventilation.	
When removing the front panel or cabinet, execute short-circuit and discharge between high voltage capacitor terminals. If discharge is not executed, an electric shock is caused by high voltage resulted in a death or injury.	
Do not turn the air-conditioner ON or OFF by plugging or unplugging the power plug. There is risk of fire or electrical shock.	

Copyright ©2013 LG Electronics. Inc. All right reserved.
Only for training and service purposes

LGE Internal Use Only

Do not use a defective or underrated circuit breaker. Use the correctly rated breaker and fuse. Otherwise there is a risk of fire or electric shock.	
Install the panel and the cover of control box securely. Otherwise there is risk of fire or electric shock due to dust, water etc.	
Indoor/outdoor wiring connections must be secured tightly and the cable should be routed properly so that there is no force pulling the cable from the connection terminals. Improper or loose connections can cause heat generation or fire.	
Do not touch, operate, or repaire the product with wet hands. Hoding the plug by hand when taking out. Otherwise there is risk of electric shock or fire.	
Use a vacuum pump or Inert (nitrogen) gas when doing leakage test or air purge. Do not compress air or Oxygen and Do not use Flammable gases. Otherwise, it may cause fire or explosion. - There is the risk of death, injury, fire or explosion.	

⚠CAUTION	
Do not turn on the breaker under condition that front panel and cabinet are removed.	
Be sure to earth the air conditioner with an earthing conductor connected to the earthing terminal.	
Conduct repair works after checking that the refrigerating cycle section has cooled down sufficiently. Otherwise, working on the unit, the hot refrigerating cycle section can cause burns.	
Do not tilt the unit when removing panels. Otherwise, the water inside the unit can spill and wet floor.	
Do not use the welder in a well-ventilated place. Using the welder in an enclosed room can cause oxygen deficiency.	
Be sure to turn off power switch before connect or disconnect connector, or parts damage may be occurred.	

Copyright ©2013 LG Electronics. Inc. All right reserved.
Only for training and service purposes

LGE Internal Use Only

1.2 Inspections after Repair

⚠ WARNING	
Check to see if the power cable plug is not dirty or loose. If the plug is dust or loose it can cause an electrical shock or fire.	
Do not use a joined power cable or extension cable, or share the same power outlet with other electrical appliances. otherwise, it can cause an electrical shock, excessive heat generation or fire.	
Do not insert hands or other objects through the air inlet or outlet while the product is operating. There are sharp and moving parts that could cause personal injury.	
Do not block the inlet or outlet of air flow. It may cause product failure	

⚠ CAUTION	
Check to see if the parts are mounted correctly and wires are connected. Improper installation and connections can cause an electric shock or an injury.	
Check the installation platform or frame has corroded. Corroded installation platform or frame can cause the unit to fall, resulting in injury.	
Be sure to check the earth wire is correctly connected.	
After the work has finished, be sure to do an insulation tset to check the resistance is 2[Mohm] or more between the charge section and the non-charge metal section (Earth position). If the resistance value is low, a disaster such as a leak or electric shock is caused at user's side.	
Check the drainage of the indoor unit after the repair. If drainage is faulty the water to enter the room and wet floor.	

Copyright ©2013 LG Electronics. Inc. All right reserved.
Only for training and service purposes

LGE Internal Use Only

2. Model Line Up

2.1 Indoor units

Category	Type	Chassis		Model Name						
				Capacity class, kW						
				5.0	6.0	7.0	10.5	12.5	14.1	15.8
Ceiling cassette	4way		TP	ATNQ18GPLE3	ATNQ21GPLE3					
			TN			ATNQ24GNLE3				
			TM				ATNQ36GMLE3	ATNQ42GMLE3	ATUQ48GMLE3	ATUQ54GMLE3
Ceiling suspended			VJ	AVNQ18GJLA0	AVNQ21GJLA0	AVNQ24GJLA0				
			VK				AVNQ36GKLA0			
			VL					AVNQ42GLLA0	AVUQ48GLLA0	AVUQ54GLLA0
Ceiling concealed duct	High static pressure		BH	ABNQ18GHLA0	ABNQ21GHLA0					
			BG			ABNQ24GGLA0	ABNQ36GGLA0			
			BR					ABNQ42GRLA0	ABUQ48GRLA0	ABUQ54GRLA0
	Low static pressure		L2	ABNQ18GL2A0	ABNQ21GL2A0					
			L3			ABNQ24GL3A0				

Copyright ©2013 LG Electronics. Inc. All right reserved.
Only for training and service purposes

LGE Internal Use Only

2.2 Outdoor units

Model Names		AUUQ18GH1 ATUQ18GPLE3 AVUQ18GJLA0 ABUQ18GHLA0 ABUQ18GL2A0	AUUQ21GH1 ATUQ21GPLE3 AVUQ21GJLA0 ABUQ21GHLA0 ABUQ21GL2A0	AUUQ24GH1 ATUQ24GNLE3 AVUQ24GJLA0 ABUQ24GGLA0 ABUQ24GL3A0
No. of connectable indoor units		1		
Total capacity class index of Connectable Indoor units	kW	5.0	6.0	7.0
Connectable indoor unit model names		ATNQ18GPLE3 AVNQ18GJLA0 ABNQ18GHLA0 ABNQ18GL2A0	ATNQ21GPLE3 AVNQ21GJLA0 ABNQ21GHLA0 ABNQ21GL2A0	ATNQ24GNLE3 AVNQ24GJLA0 ABNQ24GGLA0 ABNQ24GL3A0
Power supply		220-240V, 1Ø, 50Hz 220V, 1Ø, 60Hz		
Chassis				

Model Names		AUUQ36GH1 ATUQ36GMLE3 AVUQ36GKLA0 ABUQ36GGLA0	AUUQ42GH1 ATUQ42GMLE3 AVUQ42GLLA0 ABUQ42GRLA0	AUUQ48GH1 ATUQ48GMLE3 AVUQ48GLLA0 ABUQ48GRLA0	AUUQ54GH1 ATUQ54GMLE3 AVUQ54GLLA0 ABUQ54GRLA0
No. of connectable indoor units		1			
Total capacity class index of Connectable Indoor units	kW	10.5	12.5	14.1	15.8
Connectable indoor unit model names		ATNQ36GMLE3 AVNQ36GKLA0 ABNQ36GGLA0	ATNQ42GMLE3 AVNQ42GLLA0 ABNQ42GRLA0	ATUQ48GMLE3 AVUQ48GLLA0 ABUQ48GRLA0	ATUQ54GMLE3 AVUQ54GLLA0 ABUQ54GRLA0
Power supply		220-240V, 1Ø, 50Hz 220V, 1Ø, 60Hz			
Chassis					

Copyright ©2013 LG Electronics. Inc. All right reserved.
Only for training and service purposes

LGE Internal Use Only

3. Nomenclature

3.1 Indoor Unit(Global)

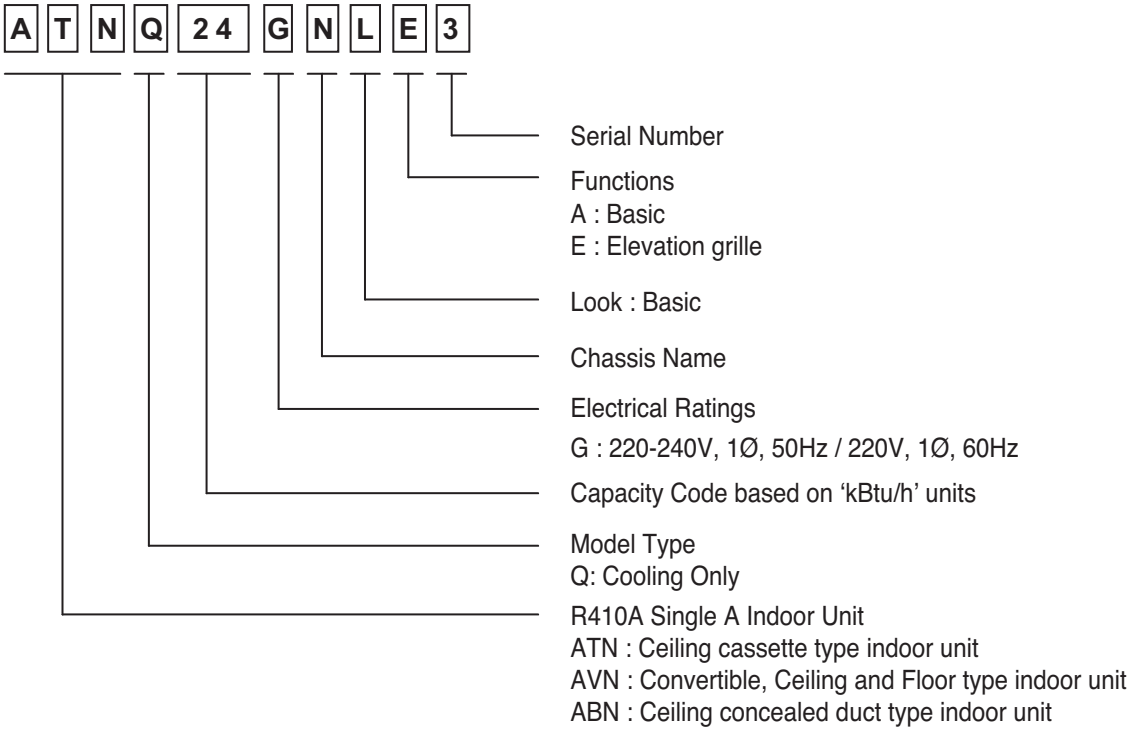

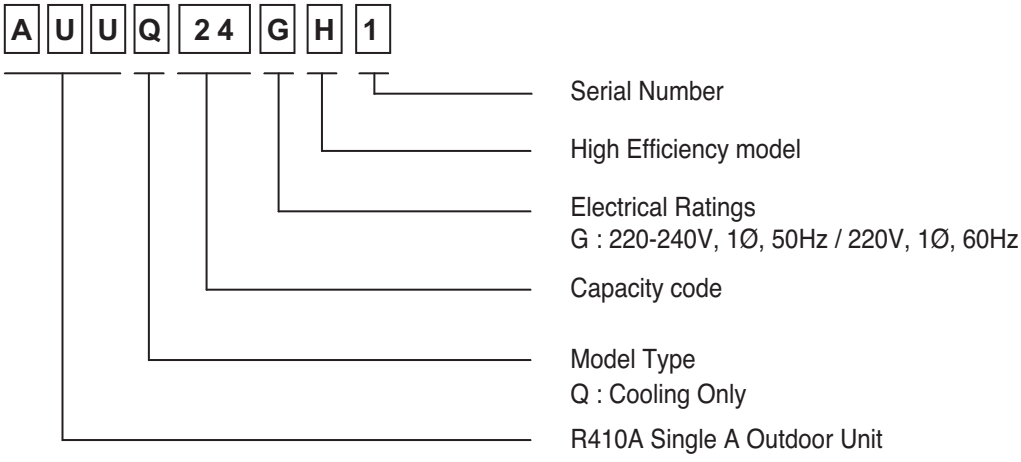

Copyright ©2013 LG Electronics. Inc. All right reserved.
Only for training and service purposes

LGE Internal Use Only

Part 2 Functions & Controls

1. List of Functions & Accessory 11

2. Air flow 15
2.1 Auto swing (left & right) 15
2.2 Auto swing (up & down) 15
2.3 Chaos swing (up/down) 15
2.4 Air flow step 16
2.5 Chaos wind (auto wind) 16
2.6 Jet Cool Mode Operation 16
2.7 Swirl wind Swing 16

3. Air purifying 17
3.1 PLASMA Air Purifying System 17

4. Installation Functions 18
4.1 E.S.P. (External Static Pressure) Setting 18
4.2 High Ceiling operation 23

5. Reliability 24
5.1 Hot start 24
5.2 Self-diagnosis Function 24

6. Convenience Functions & Controls 25
6.1 Cooling Operations 25
6.2 Auto cleaning operation 26
6.3 Auto changeover operation 26
6.4 Child Lock Function 27
6.5 Group Control 28
6.6 Sleep Timer Operation 29
6.7 Timer(On/Off) 29
6.8 Weekly Program 30
6.9 Two Thermistor Control 32

7. Special Function & KIT 33
7.1 Low Ambient control 33
7.2 Space Control 33
7.3 Auto Elevation Grille 33

Copyright ©2013 LG Electronics. Inc. All right reserved.
Only for training and service purposes

LGE Internal Use Only

1. List of Functions & Accessory

1. 4-Way Ceiling Cassette Indoor

Category	Functions	ATNQ18GPLE3 ATNQ21GPLE3 ATNQ24GNLE3 ATNQ36GMLE3 ATNQ42GMLE3 ATNQ48GMLE3 ATNQ54GMLE3
Air flow	Air supply outlet	4
	Airflow direction control (left & right)	X
	Airflow direction control (up & down)	Auto
	Auto swing (left & right)	X
	Auto swing (up & down)	O
	Airflow steps (fan/cool/heat)	4 / 5 / 4
	Chaos wind(auto wind)	O
	Jet cool/heat	O / X
	Swirl wind	O
Air purifying	Triple filter (Deodorizing)	X
	Plasma air purifier	PTPKM0
	Allergy Safe filter	X
	Long-life prefilter (washable / anti-fungus)	O
Installation	Drain pump	O
	E.S.P. control*	X
	Electric heater	X
	High ceiling operation*	O
	Auto Elevation Grille*	PTEGM0
Reliability	Hot start	O
	Self diagnosis	O
	Soft dry operation	O
Convenience	Auto changeover**	O**
	Auto cleaning	X
	Auto operation(artificial intelligence)**	O**
	Auto Restart	O
	Child lock*	O
	Forced operation	O
	Group control*	O
	Sleep mode	O
	Timer(on/off)	O
	Timer(weekly)*	O
	Two thermistor control*	O
Individual control	Wired remote controller	O
	Deluxe wired remote controller	PQRCUDS0 / PQRCUDS0B / PQRCUDS0S
	Simple wired remote controller	PQRCVCL0Q / PQRCVCL0QW
	Simple Wired remote controller(for hotel use)	PQRCHCA0Q / PQRCHCA0QW
	Wireless remote controller	PQWRHDF0
CAC network function	General central controller (Non LGAP)	X
	Network Solution(LGAP)	O
	Dry contact	PQDSA(1)/PQDSB(1) / PQDSBC
	PI 485(for Indoor Unit)	X
Special function kit	Zone controller	X
	CTI(Communication transfer interface)	X
	Electronic thermostat	X
Others	Remote temperature sensor	PQRSTA0
	Telecom shelter controller	X

Copyright ©2013 LG Electronics. Inc. All right reserved.
Only for training and service purposes

LGE Internal Use Only

2. Ceiling Concealed Duct Indoor

Category	Functions	ABNQ18GHLA0, ABUQ18GL2A0 ABNQ21GHLA0, ABUQ21GL2A0 ABNQ24GGLA0, ABUQ24GL3A0 ABNQ36GGLA0 ABNQ42GRLA0 ABNQ48GRLA0 ABNQ54GRLA0
Air flow	Air supply outlet	2
	Airflow direction control (left & right)	X
	Airflow direction control (up & down)	X
	Auto swing (left & right)	X
	Auto swing (up & down)	X
	Airflow steps (fan/cool/heat)	3 / 3 / 3
	Chaos wind(auto wind)	X
	Jet cool/heat	O / X
	Swirl wind	X
Air purifying	Triple filter (Deodorizing)	X
	Plasma air purifier	X
	Allergy Safe filter	X
	Long-life prefilter (washable / anti-fungus)	O
Installation	Drain pump	ABDPG
	E.S.P. control*	O
	Electric heater	X
	High ceiling operation*	X
	Auto Elevation Grille*	X
Reliability	Hot start	O
	Self diagnosis	O
	Soft dry operation	O
Convenience	Auto changeover**	O**
	Auto cleaning	X
	Auto operation(artificial intelligence)**	O**
	Auto Restart	O
	Child lock*	O
	Forced operation	X
	Group control*	O
	Sleep mode	X
	Timer(on/off)	O
	Timer(weekly)*	O
	Two thermistor control*	O
Individual control	Standard Wired remote controller	O
	Deluxe wired remote controller	X
	Simple wired remote controller	X
	Simple Wired remote controller(for hotel use)	X
	Wireless remote controller	X
CAC network function	General central controller (Non LGAP)	X
	Network Solution(LGAP)	O
	Dry contact	PQDSA(1)/PQDSB(1) / PQDSBC
	PI 485(for Indoor Unit)	X
Special function kit	Zone controller	ABZCA
	CTI(Communication transfer interface)	X
	Electronic thermostat	X
Others	Remote temperature sensor	PQRSTA0
	Telecom shelter controller	X

Copyright ©2013 LG Electronics. Inc. All right reserved.
Only for training and service purposes

LGE Internal Use Only

3. Ceiling & floor

Type		Ceiling Suspended
Category	Functions	AVNQ18GJLA0 AVNQ21GJLA0 AVNQ24GJLA0 AVNQ36GKLA0 AVNQ42GLLA0 AVNQ48GLLA0 AVNQ54GLLA0
Air flow	Air supply outlet	1
	Airflow direction control (left & right)	Manual
	Airflow direction control (up & down)	Auto
	Auto swing (left & right)	X
	Auto swing (up & down)	O
	Airflow steps (fan/cool/heat)	3 / 4 / 3
	Chaos wind(auto wind)	O
	Jet cool/heat	O / X
	Swirl wind	X
Air purifying	Triple filter (Deodorizing)	X
	Plasma air purifier	X
	Allergy Safe filter	X
	Long-life prefilter (washable / anti-fungus)	O
Installation	Drain pump	X
	E.S.P. control*	X
	Electric heater	X
	High ceiling operation*	O
	Auto Elevation Grille*	X
Reliability	Hot start	O
	Self diagnosis	O
	Soft dry operation	O
Convenience	Auto changeover**	O**
	Auto cleaning	X
	Auto operation(artificial intelligence)**	O**
	Auto Restart	O
	Child lock*	O
	Forced operation	O
	Group control*	O
	Sleep mode	O
	Timer(on/off)	O
	Timer(weekly)*	O
	Two thermistor control*	O
Individual control	Wired remote controller	PQRCVSL0/PQRCVSL0QW
	Deluxe wired remote controller	X
	Simple wired remote controller	X
	Simple Wired remote controller(for hotel use)	X
	Wireless remote controller	O
Network function	General central controller (Non LGAP)	X
	Network Solution(LGAP)	O
	Dry contact	PQDSA(1)/PQDSB(1) / PQDSBC
	PI 485(for Indoor Unit)	X
Special function kit	Zone controller	X
	CTI(Communication transfer interface)	X
	Electronic thermostat	X
Others	Remote temperature sensor	PQRSTA0
	Telecom shelter controller	X

Copyright ©2013 LG Electronics. Inc. All right reserved.
Only for training and service purposes

LGE Internal Use Only

4. Outdoor

Category	Functions	5 / 6 kW	7 kW ↑
Reliability	Defrost / Deicing	X	X
	High pressure switch	X	X
	Low pressure switch	X	X
	Phase protection	X	X
	Restart delay (3-minutes)	O	O
	Self diagnosis	O	O
	Soft start	O	O
	Test function	O	X
Convenience	Night Silent Operation	O	O
network function	Network solution(LGAP)	X	O

Device		5 / 6 kW	7 kW ↑
Central Controller	Simple Controller	X	PQCSB101S0
	Function controller	X	PQCSB101S0 + PQCSC101S0
	Function Scheduler	X	PQCSB101S0 + PQCSD130A0
	AC Ez	X	PQCSZ250S0
	AC Smart II	X	PQCSW320A1E
	Option Kit (SD card type)	X	PQCSE341A0 / PQCSE342A0
	ACP(Advanced Control Platform)	X	PQCPA11A0E / PQCPB11A0E
	AC Manager	X	PQCSS520A0E
	PI485	X	PMNFP14A0 / PMNFP14A1
	DO(Digital Output) Kit	X	PQNFP00T0
BNU (Building Network Unit)	LONWORKS Gateway	X	PQNFB16A1
	BACnet Gateway	X	PQNFB17B0
Installation	Y branch	X	X
	Header branch	X	X
	Air Guide	X	X
ODU Dry Contact		X	X
Low Ambient Kit		O (Logical operation)	O (Logical operation)

Copyright ©2013 LG Electronics. Inc. All right reserved.
Only for training and service purposes

LGE Internal Use Only

2. Air flow

2.1 Auto swing (left & right)

• By the horizontal airflow direction control key input, the left/right louver automatically operates with the auto swing or it is fixed to the desired direction.

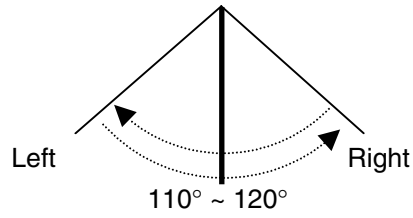

2.2 Auto swing (up & down)

• By the auto swing key input, the upper/lower vane automatically operates with the auto swing or it is fixed to the desired direction.

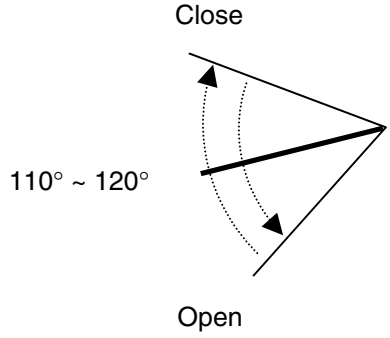

2.3 Chaos swing (up/down)

• By the Chaos swing key input, the upper/lower vane automatically operates with the chaos swing or it is fixed to the desired direction.

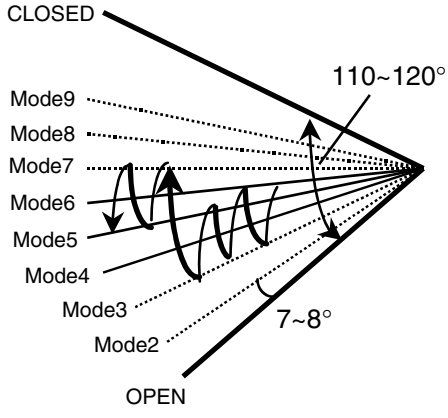

NOTE: Some Models are different by swing width and swing pattern.

Copyright ©2013 LG Electronics. Inc. All right reserved.
Only for training and service purposes

LGE Internal Use Only

2.4 Air flow step

- Indoor fan motor control have 6 steps.
- Air volume is controlled "SH", "H", "Med", Low" by remote controller.
- "LL" step is selected automatically in Hot start operation.

Step	Discription
LL	Very low, In heating mode
L	Low
M	Med
H	High
SH	Super high
Auto	Chaos wind

2.5 Chaos wind (auto wind)

- When "Auto" step selected and then operated, the high, medium, or low speed of the airflow mode is operated for 2~15 sec. randomly by the Chaos Simulation

2.6 Jet Cool Mode Operation

- While in heating mode or Fuzzy operation, the Jet Cool key cannot be input.
  When it is input while in the other mode operation (cooling, dehumidification, ventilation), the Jet Cool mode is operated.
- In the Jet Cool mode, the indoor fan is operated at super-high speed for 30 min. at cooling mode operation.
- In the Jet Cool mode operation, the room temperature is controlled to the setting temperature, 18°C.
- When the sleep timer mode is input while in the Jet Cool mode operation, the Jet Cool mode has the priority.
- When the Jet Cool key is input, the upper/lower vanes are reset to those of the initial cooling mode and then operated in order that the air outflow could reach further.

2.7 Swirl wind Swing

- It is the function for comfort cooling/heating operation.
- The diagonal two louvers are opened the more larger than the other louvers. After one minute, it is opposite.

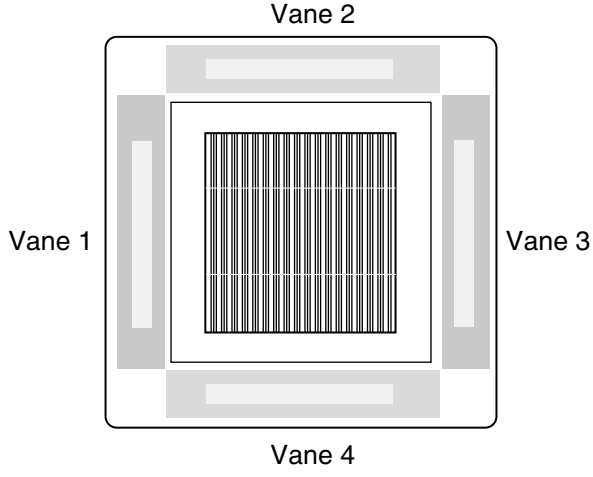

- Comparison of Air Flow Types

4-Open (conventional)

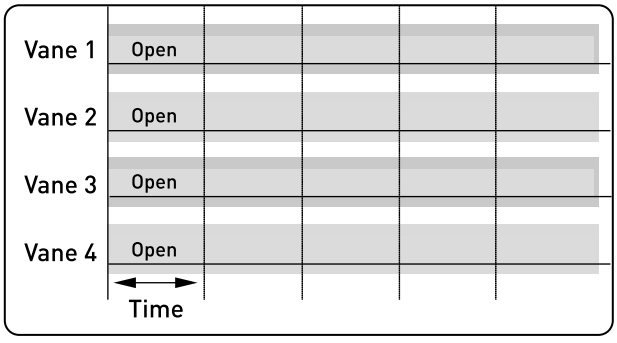

Swirl Swing (New)

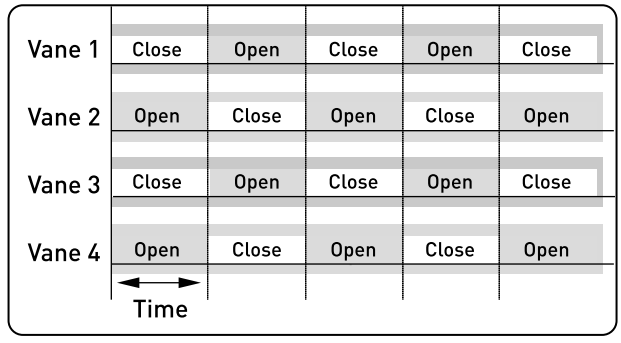

Copyright ©2013 LG Electronics. Inc. All right reserved.
Only for training and service purposes

LGE Internal Use Only

3. Air purifying

3.1 PLASMA Air Purifying System

The PLASMA Air Purifying System not only removes microscopic contaminants and dust, but also removes house mites, pollen, and pet fur to help prevent allergic diseases like asthma. This filter that can be used over and over again by simply washing with water.

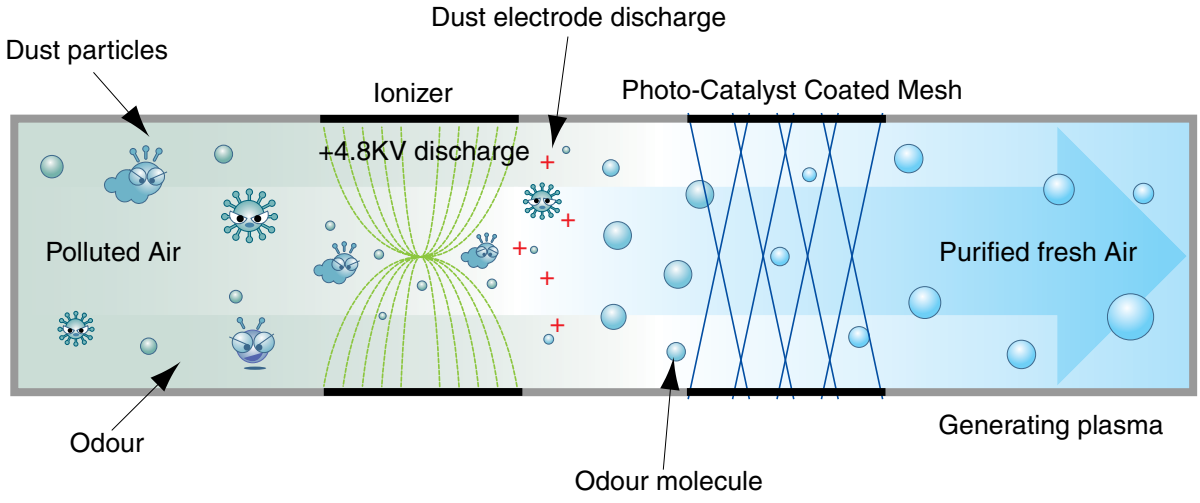

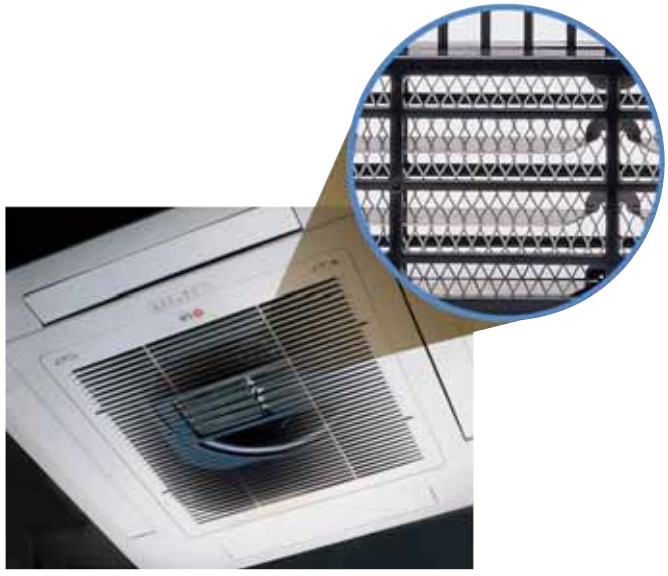

Copyright ©2013 LG Electronics. Inc. All right reserved.
Only for training and service purposes

4. Installation Functions

4.1 E.S.P. (External Static Pressure) Setting

This is the function that decides the strength of the wind for each wind level and because this function is to make the installation easier.

- If you set ESP incorrectly, the air conditioner may malfunction.
- This setting must be carried out by a certificated-technician.

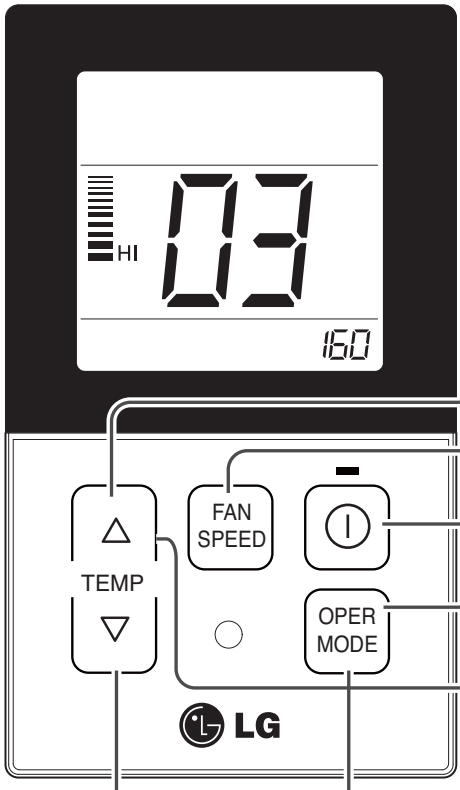

1 When pressing the △ button and OPER MODE button simultaneously for more than 3 seconds, the system will be entered into the installer setting mode.
- After entering into the installer setting mode, select the E.S.P code value by pressing the OPER MODE button.
  * E.S.P code value : 03

2 Select the desired air flow rate with the FAN SPEED button. Whenever pressing the FAN SPEED button, [Lo→Med→Hi] will be indicated.

3 Select the desired air flow rate value with the temperature up(s), down(t) button.
* E.S.P value range : 0~255
- E.S.P value will be indicated at the upper right section of the display window.

4 When pressing the ⏻ button, currently established E.S.P value will be set up.

5 When pressing the △ button and OPER MODE button simultaneously for more than 3 seconds after the setting has been completed, the setting mode will be released.
- If there isn't any button input for more than 25 seconds, the installer setting mode will also be released.

- Precaution shall be taken not to alter the E.S.P value corresponded to each air flow section.
- E.S.P value can be varied according to the products.
- In the case of going to the next air flow rate stage by pressing the fan-speed button during the setup of the E.S.P value, the E.S.P value of previous air flow rate will be maintained by remembering the E.S.P value prior to the shift.

Copyright ©2013 LG Electronics. Inc. All right reserved.
Only for training and service purposes

LGE Internal Use Only

E.S.P. setting value (reference)

Table 1

Models : ABNQ18GHLA0, ABNQ21GHLA0

(Unit: CMM)

Setting Value	Static Pressure[mmAq(Pa)]			
	2.5(25)	4(39)	6(59)	8(78)
100	12.8	-	-	-
105	13.9	-	-	-
110	15.2	12.7	-	-
115	16.5	14.0	-	-
120	17.8	15.3	12.7	-
125	-	16.5	14.0	-
130	-	17.8	15.3	12.6
135	-	-	16.5	13.5
140	-	-	17.5	14.5
145	-	-	-	16.5

Models : ABNQ24GGLA0

(Unit: CMM)

Setting Value	Static Pressure[mmAq(Pa)]				
	6(59)	8(78)	10(98)	12(118)	14(137)
80	14.8	-	-	-	-
90	19.0	14.4	-	-	-
100	23.3	19.7	13.9	-	-
110	26.9	24.3	19.8	14.1	-
120	31.2	28.2	25.2	20.1	14.4
130	34.9	32.4	29.5	25.4	20.5

Models : ABNQ36GGLA0

(Unit: CMM)

Setting Value	Static Pressure[mmAq(Pa)]			
	4(49)	6(59)	8(78)	10(98)
100	20.8	-	-	-
105	23.2	19.5	-	-
110	26.0	21.5	-	-
115	-	23.5	19.1	-
120	-	26.3	21.6	-
125	-	-	24.0	19.9
130	-	-	27.0	22.7
135	-	-	-	25.9

[Notes]

1. To get the desired Airflow & E.S.P. combination from the table set the matching value from the table. Value other than that in table will not give the combinations of airflow & E.S.P. which are mentioned in the table.
2. Table data is based at 230V. According to the fluctuation of voltage, air flow rate varies.

Copyright ©2013 LG Electronics. Inc. All right reserved.
Only for training and service purposes

LGE Internal Use Only

Models : ABNQ42GRLA0

(Unit: CMM)

Setting Value	Static Pressure[mmAq(Pa)]			
	6(59)	8(78)	10(98)	12(118)
85	31.5	-	-	-
90	36.3	29.8	-	-
95	41.3	34.5	28.4	-
100	45.4	39.7	33.5	27.3
105	-	44.1	38.6	33.1
110	-	-	44.2	38.9
115	-	-	-	44.7

Models : ABNQ48GRLA0

(Unit: CMM)

Setting Value	Static Pressure[mmAq(Pa)]			
	6(59)	8(78)	10(98)	12(118)
85	31.5	-	-	-
90	36.3	29.8	-	-
95	41.3	34.5	28.4	-
100	45.4	39.7	33.5	27.3
105	-	44.1	38.6	33.1
110	-	-	44.2	38.9
115	-	-	-	44.7

Models : ABNQ54GRLA0

(Unit: CMM)

Setting Value	Static Pressure[mmAq(Pa)]				
	6(59)	8(78)	10(98)	12(118)	14(137)
95	41.3	-	-	-	-
100	45.4	39.7	-	-	-
105	49.5	44.1	38.6	-	-
110	-	48.5	44.2	38.9	-
115	-	-	49.8	44.7	42.2
120	-	-	-	50.5	48.1

※ ABNQ42GRLA0 / ABNQ48GRLA0 As far as possible do not set ESP 82,83

Copyright ©2013 LG Electronics. Inc. All right reserved.
Only for training and service purposes

LGE Internal Use Only

Models: ABNQ18GL2A0 / ABNQ21GL2A0

(Unit : CMM)

Setting Value	Static Pressure(mmAq(Pa))					
	0 (0)	1 (10)	2 (20)	3 (30)	4 (40)	5 (50)
75	6.50	-	-	-	-	-
80	7.34	6.70	-	-	-	-
85	8.20	7.55	6.69	-	-	-
90	9.07	8.43	7.56	6.47	-	-
95	9.96	9.32	8.45	7.36	-	-
100	10.87	10.22	9.36	8.27	6.96	-
105	11.79	11.15	10.28	9.19	7.89	6.35
110	12.73	12.09	11.22	10.14	8.83	7.30
115	13.69	13.05	12.18	11.09	9.78	8.25
120	14.67	14.02	13.16	12.07	10.76	9.23
125	15.66	15.01	14.15	13.06	11.75	10.22
130	16.67	16.02	15.16	14.07	12.76	11.23
135	-	-	16.18	15.10	13.79	12.26
140	-	-	-	16.14	14.83	13.30
145	-	-	-	-	15.89	14.36

Models: ABNQ24GL3A0

(Unit : CMM)

Setting Value	Static Pressure(mmAq(Pa))					
	0 (0)	1 (10)	2 (20)	3 (30)	4 (40)	5 (50)
85	10.19	-	-	-	-	-
90	12.18	10.71	11.09	-	-	-
95	13.81	12.34	12.19	-	-	-
100	15.16	13.69	13.38	10.71	-	-
105	16.30	14.83	14.36	11.85	-	-
110	17.31	15.85	15.23	12.86	10.97	-
115	18.27	16.80	16.07	13.82	11.93	-
120	19.26	17.79	16.93	14.80	12.91	10.49
125	20.34	18.87	17.89	15.88	13.99	11.57
130	21.60	20.13	19.01	17.14	15.25	12.83
135	-	21.64	20.36	18.66	16.76	14.35
140	-	-	22.01	20.50	18.61	16.19
145	-	-	-	22.75	20.86	18.44

Note :

1. The above table shows the correlation between the air rates and E.S.P.

Copyright ©2013 LG Electronics. Inc. All right reserved.
Only for training and service purposes

LGE Internal Use Only

Table 2

Model	Mode	Set value	Standard ESP (mmAq(Pa))	CMM	Lower Limit of External Static Pressure (mmAq(Pa))	Upper Limit of External Static Pressure (mmAq(Pa))
ABNQ18GHLA0	Hi	1450	8 (78)	16.5	2.5(25)	8 (78)
	Mid	1400		14.5		
	Low	1340		13.0		
ABNQ21GHLA0	Hi	1450	8 (78)	16.5	2.5(25)	8 (78)
	Mid	1400		14.5		
	Low	1340		13.0		
ABNQ24GGLA0	Hi	1270	8 (78)	16.5	2.5(25)	8 (78)
	Mid	1210		14.5		
	Low	1090		13.0		
ABNQ36GGLA0	Hi	1370	10 (98)	32.0	4.0(39)	10 (98)
	Mid	1310		29.0		
	Low	1260		26.0		
ABNQ42GRLA0	Hi	1060	10 (98)	28.0	5.0(49)	10 (98)
	Mid	1020		26.0		
	Low	990		32.0		
ABNQ48GRLA0	Hi	1100	10 (98)	40.0	5.0(49)	10 (98)
	Mid	1060		35.0		
	Low	1030		30.0		
ABNQ54GRLA0	Hi	1240	10 (98)	50.0	5.0(49)	10 (98)
	Mid	1200		45.0		
	Low	1150		40.0		

Static pressure(mmAq)		0	1	2	3	4
Model	Step(Hi/Mid/Low)	Setting value				
ABNQ18GL2A0	15 CMM	90	97	105	114	122
	12.5 CMM	82	90	99	109	119
	10 CMM	75	84	93	103	114
ABNQ21GL2A0	17.5 CMM	90	97	105	114	122
	14 CMM	82	90	99	109	119
	12 CMM	75	84	93	103	114
ABNQ24GL3A0	20 CMM	110	117	125	129	-
	16 CMM	100	107	115	121	127
	12 CMM	90	97	105	114	122

[Notes]

1. To get the desired Airflow & E.S.P. combination from the table set the matching value from the table. Value other than that in table will not give the combinations of airflow & E.S.P. which are mentioned in the table.
2. Table data is based at 230V. According to the fluctuation of voltage, air flow rate varies.

Copyright ©2013 LG Electronics. Inc. All right reserved.
Only for training and service purposes

LGE Internal Use Only

4.2 High Ceiling operation

This function is to adjust FAN Airflow rate according to ceiling height (For ceiling type product)

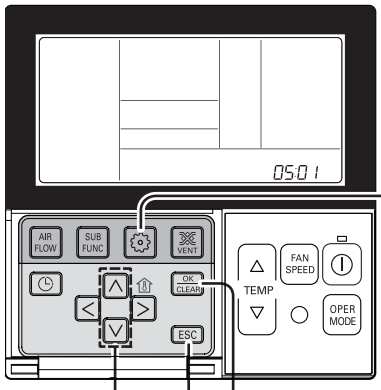

1 If pressing button long for 3 seconds, it enters into remote controller setter setup mode.
- If pressing once shortly, it enters into user setup mode. Please press more than 3 seconds for sure.



2 If moving to ceiling height selection menu by pressing button, it indicates as picture below.

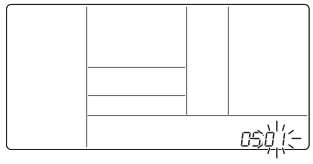

3 Select ceiling height value by pressing button. (01:Low, 02:Medium, 03:High, 04:Very high)

05:01
Function Code Thermistor setting

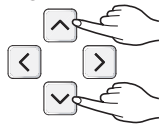

4 Press button to save.

05:01



5 Pressing button will exit settings mode.
- ❉ After setup, it automatically gets out of setup mode if there is no button input for 25 seconds.
- ❉ When exiting without pressing set button, the manipulated value is not reflected.

<Ceiling Height Selection Table>

Ceiling Height Level		Description
01	Low	Decrease the indoor airflow rate 1 step from standard level
02	Medium	Set the indoor airflow rate as standard level
03	High	Increase indoor airflow rate 1 step from standard level
04	Very high	Increase indoor airflow rate 2 steps from standard level

- Ceiling height setting is available only for some products.
- Ceiling height of 'Very high' function may not exist depending on the indoor unit.
- Refer to the product manual for more details.

Copyright ©2013 LG Electronics. Inc. All right reserved.
Only for training and service purposes

LGE Internal Use Only

5. Reliability

5.1 Self-diagnosis Function

• The air conditioner installed can self-diagnosed its error status and then transmits the result to the central control. Therefore, a rapid countermeasure against failure of the air conditioner allows easy management and increases the usage life of air conditioner.

• Refer to trouble shooting guide.

5.2 Soft dry operation

• When the dehumidification operation input by the remote control is received, the intake air temperature is detected and the setting temp is automatically set according to the intake air temperature.

Intake air Temp.	Setting Temp.
26°C ≤ intake air temp.	25°C
24°C ≤ intake air temp.< 26°C	intake air temp. -1°C
22°C ≤ intake air temp. < 24°C	intake air temp. -0.5°C
18°C ≤ intake air temp. < 22°C	intake air temp.
intake air temp. < 18°C	18°C

• While compressor off, the indoor fan repeats low airflow speed and stop.

• While the intake air temp is between compressor on temp. and compressor off temp., 10-min dehumidification operation and 4-min compressor off repeat.

Compressor ON Temp. ➔ Setting Temp+0.5°C
Compressor OFF Temp. ➔ Setting Temp-0.5°C

• In 10-min dehumidification operation, the indoor fan operates with the low airflow speed.

Copyright ©2013 LG Electronics. Inc. All right reserved.
Only for training and service purposes

LGE Internal Use Only

6. Convenience Functions & Controls

6.1 Cooling Operations

6.1.1 Cooling Mode

- Operating frequency of compressor depends on the load condition, like the difference between the room temp. and the set temp., frequency restrictions.
- If the compressor operates at some frequency, the operating frequency of compressor cannot be changed within 30 seconds. (not emergency conditions)
- Compressor turned off when
  - intake air temperature is in between ±0.5°C of the setting temp. limit for three minutes continuously.
  - intake air temperature reaches below 1.0°C of the temperature of setting temp..
- Compressors three minutes time delay.
  - After compressor off, the compressor can restart minimum 3 minutes later.

Copyright ©2013 LG Electronics. Inc. All right reserved.
Only for training and service purposes

LGE Internal Use Only

6.2 Auto cleaning operation

- Function used to perform Self Cleaning to prevent the Unit from Fungus and bad odor.
- Used after the Cooling Operation before turning the unit off, clean the Evaporator and keep it dry for the next operation.
- The function is easy to operate as it is accessed through the Remote controller.

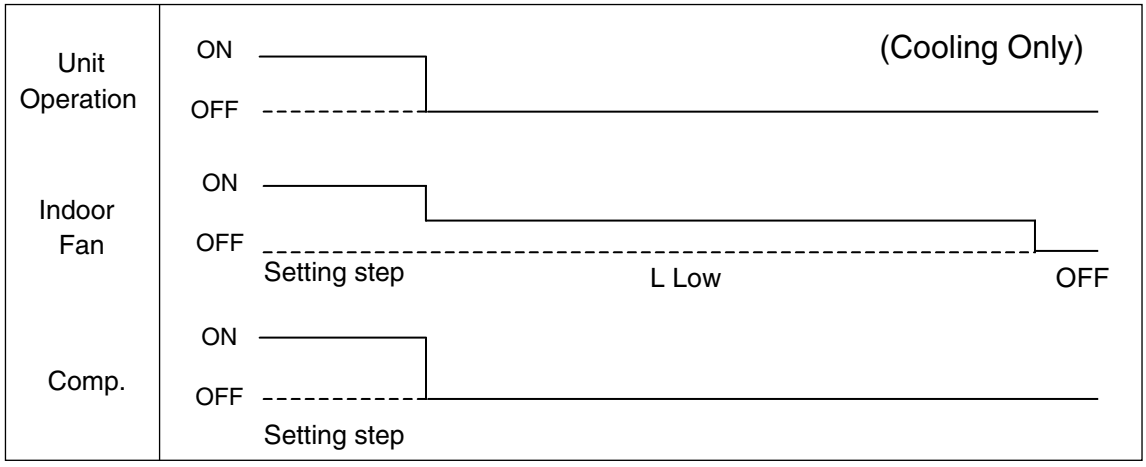

6.3 Auto restart Operation

- Whenever there is electricity failure to the unit, and after resumption of the power, unit will start in the same mode prior to the power failure. Memorized condition are on / off condition, operating mode (cooling/ heating), set temperature and fan speed. The unit will memorize the above conditions and start with same memorized condition.

Copyright ©2013 LG Electronics. Inc. All right reserved.
Only for training and service purposes

LGE Internal Use Only

6.4 Child Lock Function

It is the function to use preventing children or others from careless using.

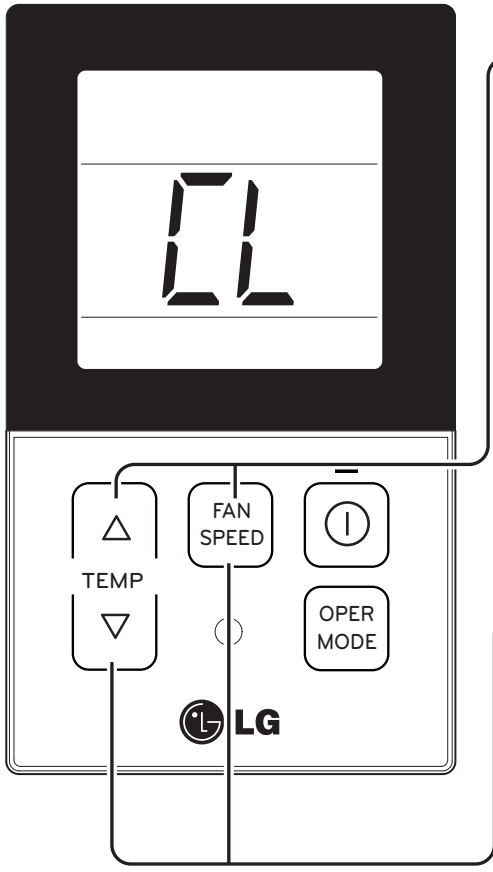

1 During the operation, when pressing the △ button and FAN SPEED button for approx. 3 seconds, the 'Child Lock' Function can be used.

- At the time of initial setting of the 'Child Lock', the 'CL' Will be indicated approx. 3 seconds at the temperature Display section before resuming to the previous mode. After the setting of the 'CL', if another button is setup, the button can not be recognized as the 'CL' is indicated at the temperature display section for approx. 3 seconds.

2 If the 'CL' function is wanted to be used under the operation standby state, press the △ button and FAN SPEED Button for approx. 3 seconds under the standby mode state and the system will be the 'CL' state.

3 As for the releasing method, when pressing the △ Button and FAN SPEED button for approx. 3 seconds, the 'CL' function can be released.

Copyright ©2013 LG Electronics. Inc. All right reserved.
Only for training and service purposes

LGE Internal Use Only

6.5 Group Control

1. When installing more than 2 units of air conditioner to one wired remote controller, please connect as the right figure.

- If it is not event communication indoor unit, set the unit as slave.
- Check for event communication through the product manual.

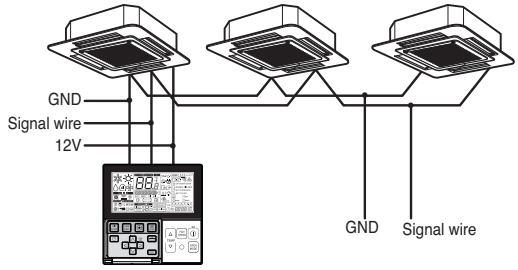

When controlling multiple indoor units with event communication function with one remote controller, you must change the master/slave setting from the indoor unit.

- Indoor units, the master/slave configuration of the product after completion of indoor unit power 'OFF' and then 'ON' the power after 1 minutes elapsed sign up.
- For ceiling type cassette and duct product group, change the switch setting of the indoor PCB.

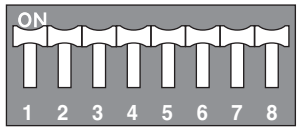

#3 switch OFF: Master
(Factory default setting)

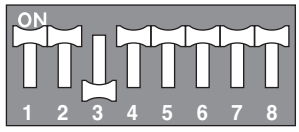

#3 switch ON: Slave

- For wall-mount type and stand type product, change the master/slave setting with the wireless remote controller. (Refer to wireless remote controller manual for detail)

❊ When installing 2 remote controllers to one indoor unit with event communication function, set the master/slave of the remote controller. (Refer to remote controller master/slave selection)
When controlling the group, some functions excluding basic operation setting, fan level Min/Mid/Max, remote controller lock setting and time setting may be limited.

2. When installing more than 2 wired remote controllers to one air conditioner, please connect as the right picture.

- When installing more than 2 units of wired remote controller to one air conditioner, set one wired remote controller as master and the others all as slaves, as shown in the right picture.
- You cannot control the group as shown in the right for some products.
- Refer to the product manual for more detail.

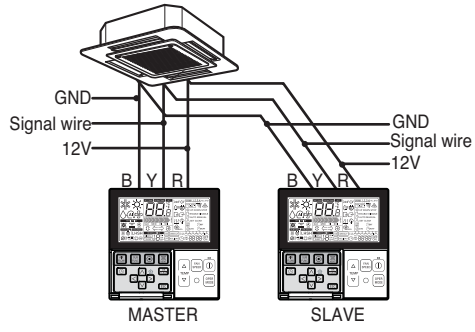

<When simultaneously connecting
2 sets of wired remote controller>

- When controlling in groups, set the master/slaver of the remote controller. Refer to Installer setting section on how to set master/slave for more detail.

Copyright ©2013 LG Electronics. Inc. All right reserved.
Only for training and service purposes

LGE Internal Use Only

6.6 Sleep Timer Operation

- When the sleep time is reached after <1,2,3,4,5,6,7,0(cancel) hr> is input by the remote control while in appliance operation, the operation of the appliance stops.
- While the appliance is on pause, the sleep timer mode cannot be input.
- While in cooling mode operation, 30 min later since the start of the sleep timer, the setting temperature increases by 1°C. After another 30 min elapse, it increases by 1°C again.
- When the sleep timer mode is input while in cooling cycle mode, the airflow speed of the indoor fan is set to the low.
- When the sleep timer mode is input while in heating cycle mode, the airflow speed of the indoor fan is set to the medium.

6.7 Timer(On/Off)

6.7.1 On-Timer Operation

- When the set time is reached after the time is input by the remote control, the appliance starts to operate.
- The timer LED is on when the on-timer is input. It is off when the time set by the timer is reached.
- If the appliance is operating at the time set by the timer, the operation continues.
  While in Fuzzy operation, the airflow speed of the indoor fan is automatically selected according to the temperature.

6.7.2 Off-Timer Operation

- When the set time is reached after the time is input by the remote control, the appliance stops operating.
- The timer LED is on when the off-timer is input. It is off when the time set by the timer is reached.
- If the appliance is on pause at the time set by the timer, the pause continues.

Copyright ©2013 LG Electronics. Inc. All right reserved.
Only for training and service purposes

LGE Internal Use Only

6.8 Weekly Program

You can set the daily reservation in weekly unit.
Weekly reservation keeps operating until before you cancel it once you setup

1 Please move to reservation setup mode by pressing reservation button.
❊ You can setup two weekly reservations for one day, and up to fourteen reservations for a week.
For example, to setup (Tuesday morning 11:30 turned on ~ afternoon 12:30 turned off), you setup in order below.

2 Please move to 'weekly' by repeatedly pressing reservation button. 'Weekly' blinks at this time.

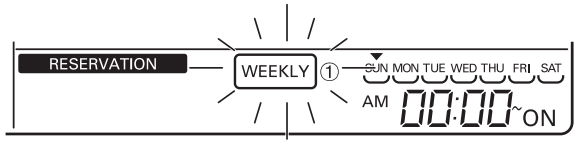

3 Please select weekly reservation or weekly reservation ¡ by using ∧ ∨ button.
❊ You can setup two reservations, weekly reservation 1 and weekly reservation 2, for a day.

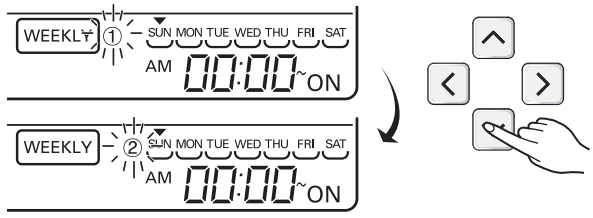

4 Please move to 'date' setup part by using < > button. If 'date' indication blinks, please setup date. You can setup date from Monday to Sunday.

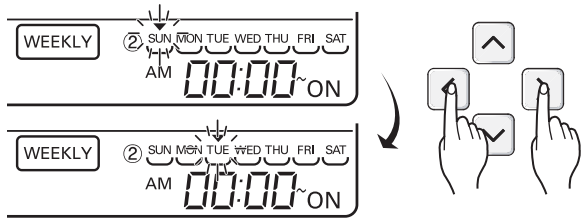

5 Please move to 'AM/PM' setup part of turning on by using ∧ ∨ button.

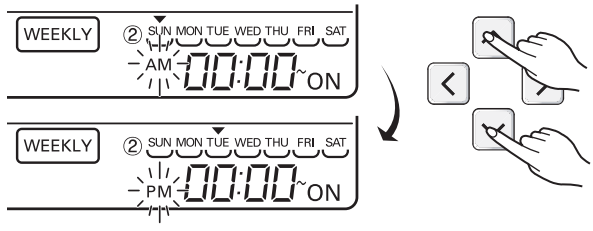

6 Please move to 'hour' setup part of turning on by using < > button.
- It is the part to setup the time at which air-conditioner is turned on.

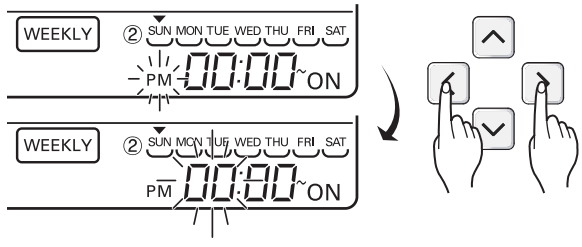

7 Please change time by using ∧ ∨ button.
- You can setup hour 0~12.

8 Please move to 'minute' setup part of turning on by using > button.

9 If 'minute' indication blinks, please setup 'minute' by using ∧ ∨ button

Copyright ©2013 LG Electronics. Inc. All right reserved.
Only for training and service purposes

LGE Internal Use Only

10 Please move to 'AM/PM' setup part of turning off by using [>] button.
- AM/PM setup is identical with turning on time setup.

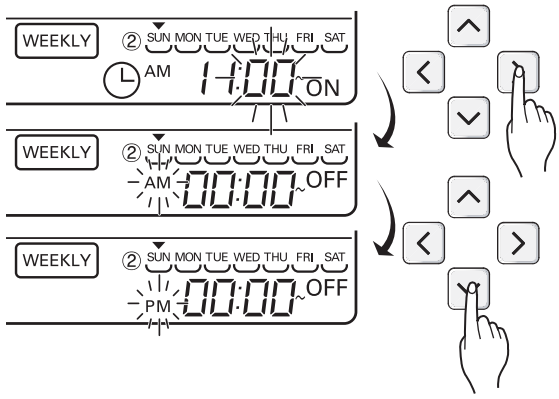

11 Please move to 'hour' setup part of turning off by using Right button.
- It is the part to reserve the time at which air-conditioner is turned off.
- If 'hour' indication blinks, please setup 'hour'.

❊ Please setup 'hour' and 'minute' identically with the method to setup turning on time.

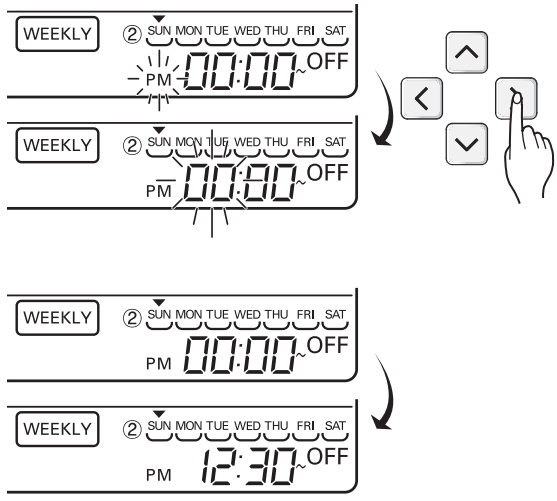

12 If finishing weekly reservation setup, please press setup/cancellation button. Weekly reservation setup for the day that you set is finished.

13 If you setup with the method identical with above by selecting the day that you'd like to setup, it operates weekly reservation.
If you setup both turning on reservation time and turning off reservation time identically, it doesn't operate reservation drive.

Weekly reservation explanation

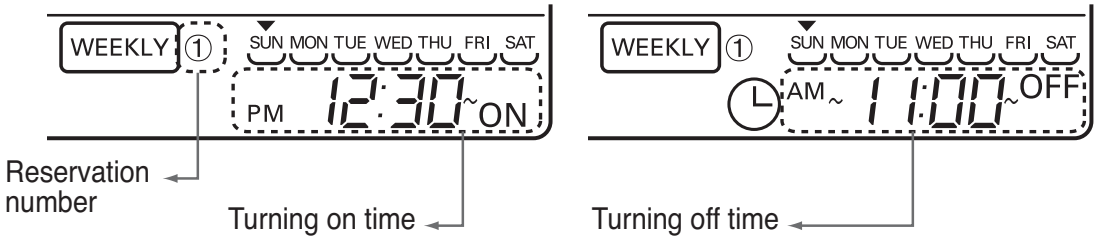

SUN MON TUE WED THU FRI SAT
Under bar: the indication that there is weekly reservation for corresponding day

❊ Indoor unit is turned on to desired temperature if it is configured using up/down button during preset of weekly operation time.
(Temperature selection range : 18°C~30°C)
- When desired temperature is not set, it is turned on automatically with desired temperature of previous operation.

Copyright ©2013 LG Electronics. Inc. All right reserved.
Only for training and service purposes

LGE Internal Use Only

6.9 Two Thermistor Control

This is the function to select the temperature sensor to judge the room temperature.

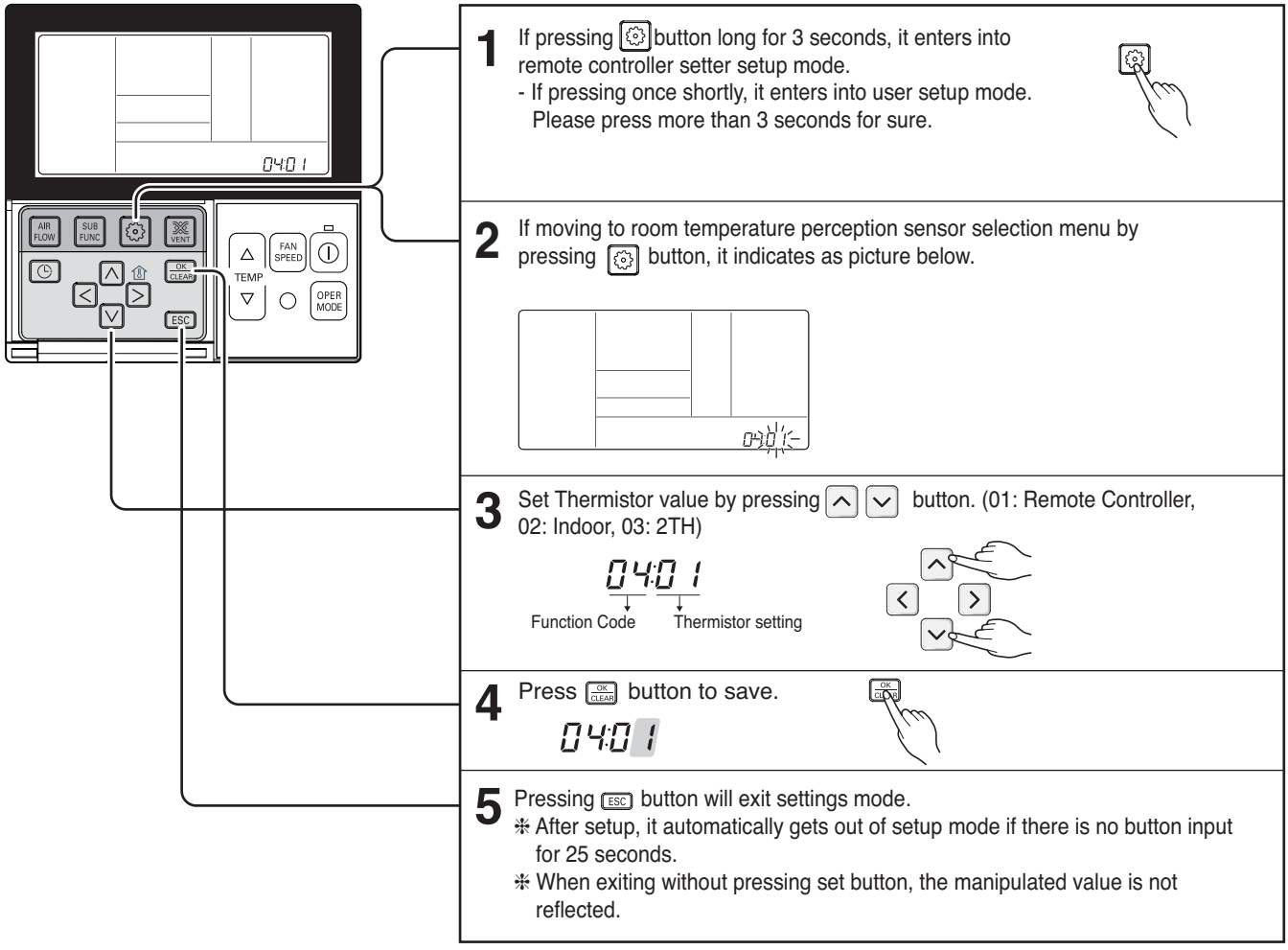

<Thermistor Table>

Temperature sensor selection			Function
01	Remote controller		Operation in remote controller temperature sensor
02	Indoor unit		Operation in indoor unit temperature sensor
03	2TH	Cooling	Operation of higher temperature by comparing indoor unit's and wired remote controller's temperature. (There are products that operate at a lower temperature.)

❉ The function of 2TH has different operation characteristics according to the product.

Copyright ©2013 LG Electronics. Inc. All right reserved.
Only for training and service purposes

LGE Internal Use Only

7. Special Function & KIT

7.1 Low Ambient control

• This Function is for cooling operating in outdoor low temperature .

• If outdoor temperature drops below certain temperature, liquid back is prevented by reducing outdoor fan speed.

• It can prevent frosting of evaporator and keep cooling operation

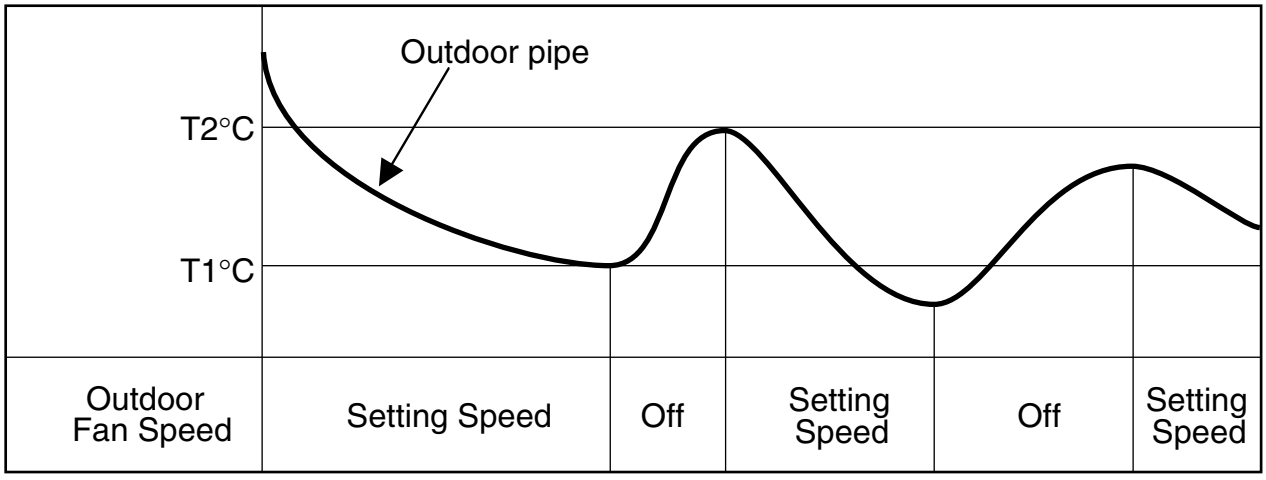

7.2 Space control

Vanes angle can be controlled by pair, considering its installation environment.

• For example direct drafts can be annoying, leading to discomfort and reduced productivity vane control helps to eliminate this problem.

• Easily controlled by wired remote control.

• Air Flow can be controlled easily regarding any space environment.

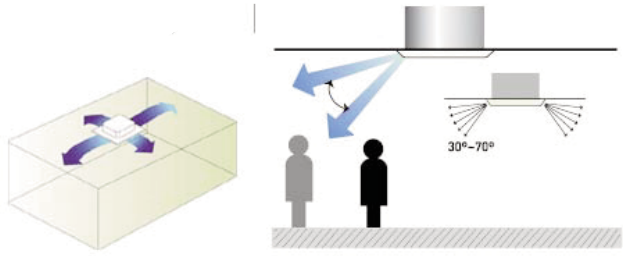

7.3 Auto Elevation Grille

• Auto Elevation Grille is automatically down to height of max. 3.1 m. So it enables to install the Indoor unit at high ceiling space. And Auto Elevation Grille makes you cleaning the filter easily.



Copyright ©2013 LG Electronics. Inc. All right reserved.
Only for training and service purposes

LGE Internal Use Only

■ ELEVATION GRILL (REMOTE CONTROLLER_Accessory)

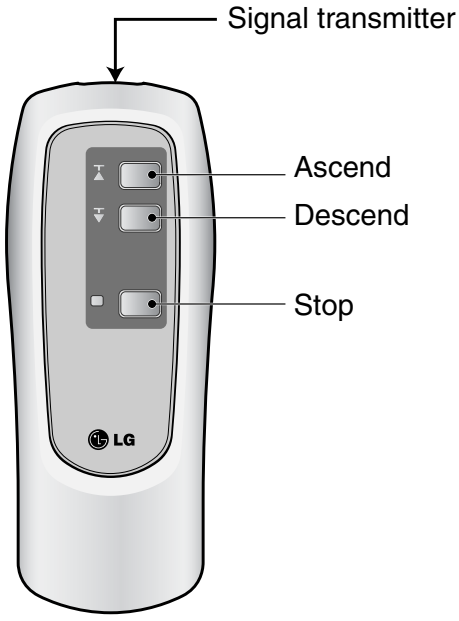

• Main Components of Lift Grill

① Lift grill front panel assembly

② Bolts for installation (4 EA, P/No. 3A00255K)

③ Instruction manual

④ Remote Controller for lift grill

• How to Use Remote Controller

As for operation of Remote Controller, use it by directing the transmitter part of Remote Controller to the receiver part of front panel directly under front panel.

- Do not drop it down or into water. Or else there is worry about trouble failure.
- Do not press hard the Remote Controller button with nail (ball-point pen or other sharp substance). Or else there is worry about trouble failure.
- In case when obstacle such as curtain hides the signal reception part of receiver in between the space interval, Remote Controller operation is infeasible.

Copyright ©2013 LG Electronics. Inc. All right reserved.
Only for training and service purposes

LGE Internal Use Only

• How to Operate the Lift Grill

⚠CAUTION

- Always stop the air conditioner operation for safety before operating lift grill.
- Take heed _ there is worry about dust fall etc. when suction grill descends.
- In case when the set automatic stop distance goes wrong, check the set value of operation panel and confirm if there is neither obstacle nor mankind.
- When you are not to remove obstacle, stop the operation before touching the obstacle.

1. Stop the Air Conditioner Operation

2. Descend the Suction Grill

- Depress the down button(▼).
  Then suction grill descends and stops automatically at a certain distance.
- You may stop it at wanted distance point by depressing the stop button (■) when descending.

3. Raise the Suction Grill

- Depress the up button(▲).
  Then suction grill goes up and enters into the front panel.

4. Stop the Suction Grill during Rising

- Depress the stop button(■).
  Make use of this when you want to stop it at your wished position.

Automatic Stop Distance of Grill

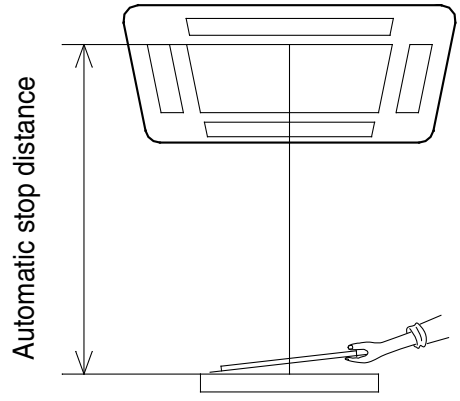

Ceiling height	Low	Medium (Height: 3~4 m)	High
Automatic stop distance	1.5±0.5 m	2.5±0.5 m	3.5±0.5 m

✳ If you want to change automatic distance setting, consult with your sale agency.

Copyright ©2013 LG Electronics. Inc. All right reserved.
Only for training and service purposes

LGE Internal Use Only

3. Basic Control

1. Normal operation.....37

2 Compressor control 37

3. EEV(Electronic Expansion Valve) control 37

Copyright ©2013 LG Electronics. Inc. All right reserved.
Only for training and service purposes

LGE Internal Use Only

1. Normal operation

Basic principle is to control the rpm of the motor by changing the working frequency of the compressor.
Three phase voltage is supplied to the motor and the time for which the voltage will supplied is controlled by IPM (intelligent power module).
Switching speed of IPM defines the variable frequency input to the motor.

Actuator	Cooling operation	Stop state
Compressor	Fuzzy control	Stop
Fan	Fuzzy control	Stop
EEV	Super heating fuzzy control	Min. Pulse

2. Compressor control

Fuzzy control : Maintain evaporating temperature (Te) to be constant on cooling mode by fuzzy control to ensure the stable system performance.

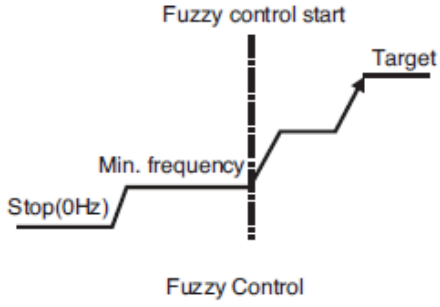

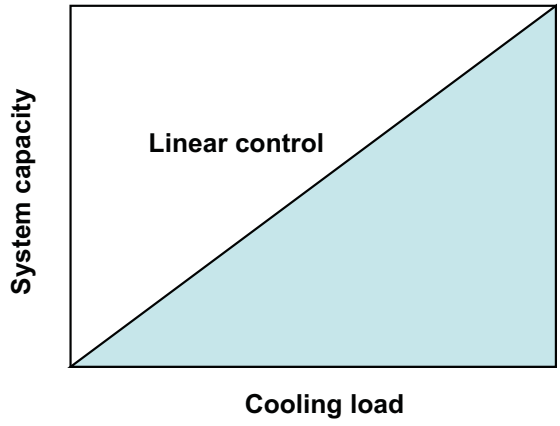

Inverter linear control as cooling load increasing

3. EEV(Electronic Expansion Valve) control

EEV operates with fuzzy control rules to keep The degree of superheat (2~3°C) or the target temperature of discharge pipe.
* Cooling mode
The degree of superheat = Tsuction – Tevaporator
Tsuction : temperature at suction pipe sensor(°C)
Tevaporator : evaporation temperature (°C)

Copyright ©2013 LG Electronics. Inc. All right reserved.
Only for training and service purposes

LGE Internal Use Only

4. Trouble Shooting

1. Self-diagnosis Function 39

1.1 Error Indicator (Indoor) 39
1.2 Error Indicator (Outdoor) 40

2. Pump Down 41

3. Evacuation 42

4. Gas Charging 43

5. Cycle Part 44

6. Electronic Parts 45

6.1 The Product doesn t operate at all 45
6.2 The Product doesn't operate with the remote controller 46
6.3 The Compressor/Outdoor Fan are don't operate 47
6.4 When indoor Fan does not operate. 48
6.5 When the louver does not operate. 49
6.6 Troubleshooting Indoor Error 50
6.7 Troubleshooting Outdoor Error 56

Copyright ©2013 LG Electronics. Inc. All right reserved.
Only for training and service purposes

LGE Internal Use Only

1. Self-diagnosis Function

1.1 Error Indicator (Indoor)

Ceiling Cassette Type Display

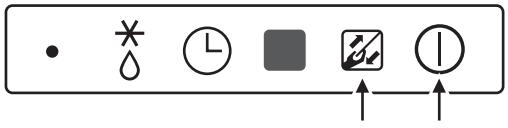

10 degrees 1 degrees
The number of times to blink = Error code

Error Indicator

- The function is to self-diagnoisis airconditioner and express the troubles identifically if there is any trouble.
- Error mark is ON/OFF for the operation LED of evaporator body in the same manner as the following table.
- If more than two troubles occur simultaneously, primarily the highest trouble fo error code is expressed.
- After error occurrence, if error is released, error LED is also released simultaneously.
- To operate again on the occurrence of error code, be sure to turn off the power and then turn on.
- Having or not of error code is different from Model.

Indoor Error

Error code	Description	Indoor Status
00	No Error	ON
01	Indoor Room themistor error	OFF
02	Indoor in-piping sensor error	OFF
03	Remote controller error	OFF
04	Drain Pump error	OFF
05	Communcation error between in and out	OFF
06	Indoor Out-Piping sensor error	OFF
07	Differnt mode operation	OFF
09	EEPROM Check Sum Error	OFF
10	Indoor BLDC Fan Lock	OFF

Copyright ©2013 LG Electronics. Inc. All right reserved.
Only for training and service purposes

LGE Internal Use Only

1.2 Error Indicator (Outdoor)

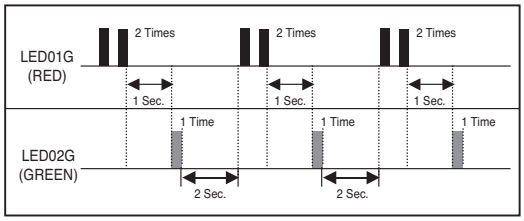

Outdoor Error
Ex) Error 21 (DC Peack)



AUUQ18GH1 /AUUQ21GH1/ AUUQ24GH1
(ATUQ18GPLE3/ ATUQ21GPLE3/ ATUQ24GNLE3)
(AVUQ18GJLA0/ AVUQ21GJLA0 / AVUQ24GJLA0)
(ABUQ18GHLA0/ ABUQ21GHLA0/ ABUQ24GGLA0)
(ABUQ18GL2A0/ ABUQ21GL2A0/ ABUQ24GL3A0)



AUUQ36GH1
(ATUQ36GMLE3)
(AVUQ36GKLA0)
(ABUQ36GGLA0)



AUUQ42GH1/ AUUQ48GH1/ AUUQ54GH1
(ATUQ42GMLE3/ ATUQ48GMLE3/ ATUQ54GMLE3)
(AVUQ42GLLA0/ AVUQ48GLLA0/ AVUQ54GLLA0)
(ABUQ42GRLA0/ ABUQ48GRLA0/ ABUQ54GRLA0)

Error Code	Description	LED 1 (Red)	LED 2 (Green)	Indoor status
21	DC Peak(IPM Fault)	2times ◑	1time ◑	OFF
22	Max. CT(CT2)	2times ◑	2times ◑	OFF
23	DC Link Low Volt.	2times ◑	3times ◑	OFF
24	Pressure switch/Heater Sink.	2times ◑	4times ◑	OFF
26	DC Comp Position Error	2times ◑	6times ◑	OFF
27	PFC Fault Error	2times ◑	7times ◑	OFF
29	Comp Over Current	2times ◑	9times ◑	OFF
32	D-Pipe High(Inv.)	3times ◑	2times ◑	OFF
40	CT Sensor(Open/Short)	4times ◑	0	OFF
41	Inv. D-Pipe Th Error(Open/Short)	4times ◑	1time ◑	OFF
43	High Pressure Sensor(Open/Short)	4times ◑	3times ◑	OFF
44	Outdoor air Th Error(Open/Short)	4times ◑	4times ◑	OFF
45	Cond. Middle Pipe Th Error(Open/Short)	4times ◑	5times ◑	OFF
51	Capacity over	5times ◑	1times ◑	OFF
53	Communication Error(Indoor ↔ Outdoor)	5times ◑	3times ◑	OFF
60	EEPROM Error(Outdoor)	6times ◑	0	OFF
61	Cond. Middle Pipe High	6times ◑	1times ◑	OFF
62	Heatsink Error(High)	6times ◑	2times ◑	OFF
65	Heatsink Th Error(Open/Short)	6times ◑	5times ◑	OFF
67	BLDC motor fan lock(Outdoor)	6times ◑	7times ◑	OFF

If abnormal voltage is supplied, the protection circuits will turn off the product in order to prevent the component damage. The product will automatically restart after 3 minutes.

Copyright ©2013 LG Electronics. Inc. All right reserved.
Only for training and service purposes

LGE Internal Use Only

2. Pump Down

• Adding the refrigerant in winter.

Setting Procedure

1) Set the Dip Switch as follow after shutting the power source down.



AUUQ18GH1 /AUUQ21GH1/ AUUQ24GH1
(ATUQ18GPLE3/ ATUQ21GPLE3/ ATUQ24GNLE3)
(AVUQ18GJLA0/ AVUQ21GJLA0 / AVUQ24GJLA0)
(ABUQ18GHLA0/ ABUQ21GHLA0/ ABUQ24GGLA0)
(ABUQ18GL2A0/ ABUQ21GL2A0/ ABUQ24GL3A0)

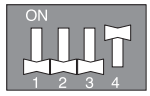

AUUQ36GH1
(ATUQ36GMLE3)
(AVUQ36GKLA0)
(ABUQ36GGLA0)

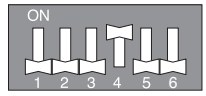

AUUQ42GH1/ AUUQ48GH1/ AUUQ54GH1
(ATUQ42GMLE3/ ATUQ48GMLE3/ ATUQ54GMLE3)
(AVUQ42GLLA0/ AVUQ48GLLA0/ AVUQ54GLLA0)
(ABUQ42GRLA0/ ABUQ48GRLA0/ ABUQ54GRLA0)

2) Reset the power.
3) Red LED and Green LED of PCB lights during work.
   (The indoor unit is operated by force.)
4) If operation is done, Red LED will be turned off.
   If operation is not done normally, Red LED will blink.
5) Close the Liquid valve only after green LED turned off (7 minutes from the start of the machine).
   Then close the gas valve after Green LED on.

WARNING:

- **When the green LED of PCB is on, compressor is going to be off because of low pressure.**
- **You should return the Dip Switch to operate normally after finishing the operation.**
- **Improper Pump down will lead to product turn off along with LED (green &red) off with in 20 minutes from the initial start.**

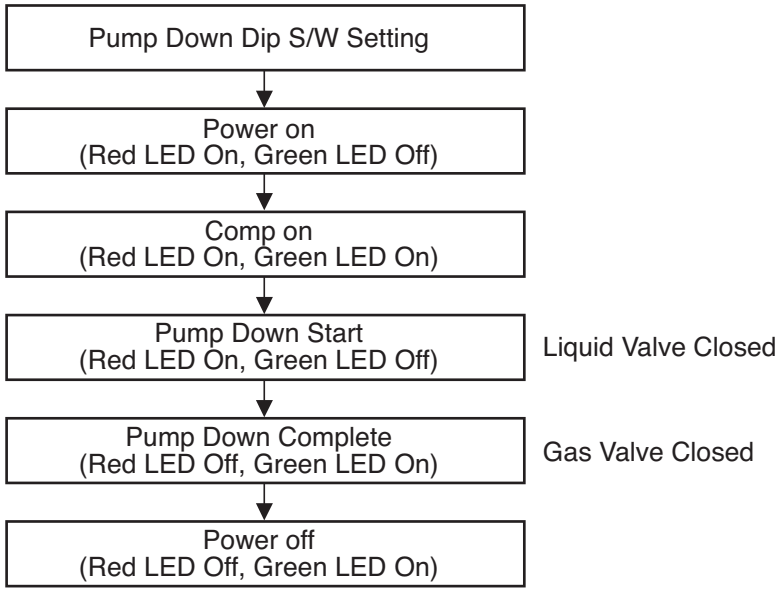

Copyright ©2013 LG Electronics. Inc. All right reserved.
Only for training and service purposes

LGE Internal Use Only

3. Evacuation (All amount of refrigerant leaked)

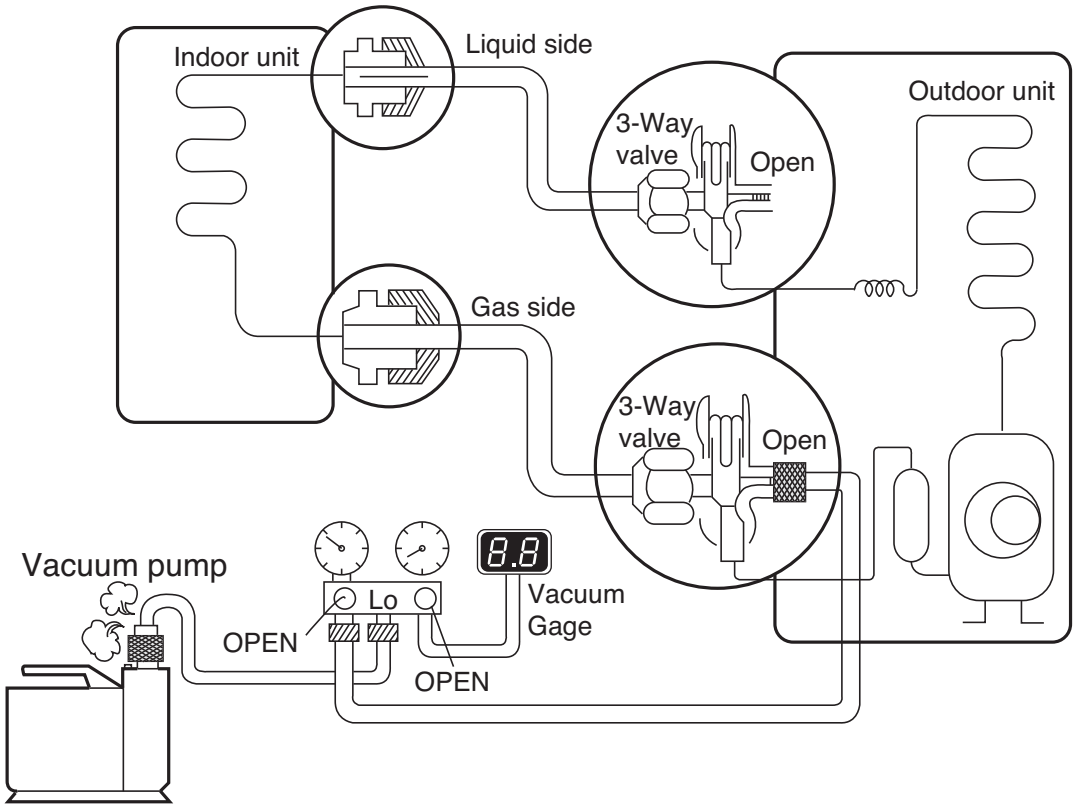

• Procedure

(1) Connect the vacuum pump to the center hose of charge set center hose

(2) Evacuation for approximately one hour.
– Confirm that the gauge needle has moved toward 0.8Torr.

(3) Close the valve (Lo side) on the charge set, turn off the vacuum pump, and confirm that the gauge needle does not move (approximately 5 minutes after turning off the vacuum pump).

(4) Disconnect the charge hose from the vacuum pump.
– Vacuum pump oil.
If the vacuum pump oil becomes dirty or depleted, replenish as needed.

WARNING

Use a vacuum pump or Inert (nitrogen) gas when doing leakage test or air purge. Do not compress air or Oxygen and do not use Flammable gases. Otherwise, it may cause fire or explosion.

- Otherwise, it may cause personal injury.

Copyright ©2013 LG Electronics. Inc. All right reserved.
Only for training and service purposes

LGE Internal Use Only

4. Gas Charging (After Evacuation)

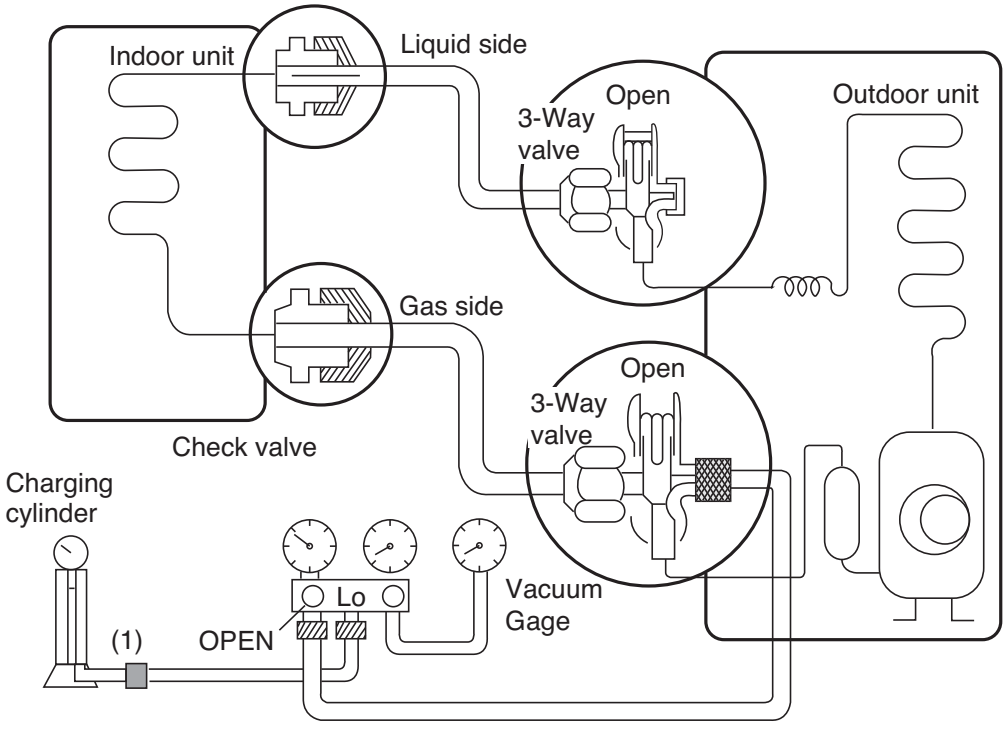

• Procedure

(1) Connect the charge hose to the charging cylinder.
- Connect the charge hose which you dis-connected from the vacuum pump to the valve at the bottom of the cylinder.
- If you are using a gas cylinder, also use a scale and reverse the cylinder so that the system can be charged with liquid.

(2) Purge the air from the charge hose.
- Open the valve at the bottom of the cylinder and press the check valve on the charge set to purge the air. (Be careful of the liquid refrigerant). The procedure is the same if using a gas cylinder.

(3) Open the valve (Lo side on the charge set and charge the system with liquid refrigerant.
- If the system can not be charged with the specified amount of refrigerant, it can be charged with a little at a time (approximately 150g each time) while operating the air conditioner in the cooling cycle; however, one time is not sufficient, wait approximately 1 minute and then repeat the procedure (pumping down-pin).

This is different from previous procedures. Because you are charging with liquid refrigerant from the gas side, absolutely do not attempt to charge with larger amounts of liquid refrigerant while operating the air conditioner.

(4) Immediately disconnect the charge hose from the 3-way valve's service port.
- Stopping partway will allow the gas to be discharged.
- If the system has been charged with liquid refrigerant while operating the air conditioner turn off the air conditioner before disconnecting the hose.

(5) Mount the valve stem nuts and the service port nut.
- Use torque wrench to tighten the service port nut to a torque of 1.8 kg.m.
- Be sure to check for gas leakage.

⚠ WARNING

When installing or relocation the unit, make sure that no substance other than the specified refrigerant(R410A) enter the refrigerant circuit.

- Any presence of foreign substance such as air can cause an abnormal pressure rise and may result in explosion or injury.

Copyright ©2013 LG Electronics. Inc. All right reserved.
Only for training and service purposes

LGE Internal Use Only

5. Cycle Part

Trouble analysis

1. Check temperature difference between intake and discharge air, and check for the operating current too.

Case	Symptom	Supposed Caused
Case 1	Temp. difference : approx. 0°C Current : less than 80% of rated current	All amount of refrigerant leaked out. Check refrigeration cycle.
Case 2	Temp. difference : approx. 8°C Current : less than 80% of rated current	Refrigerant leakage Clog of refrigeration cycle Defective Compressor.
Case 3	Temp. difference : less than 8°C Current : over the rated current	Excessive amount of refrigerant
Case 4	Temp. difference : over 8°C	Normal

NOTICE

Temperature difference between intake and discharge air depends on room air humidity. When the room air humidity is relativery higher, temperature difference is smaller. When the room air humidity is relatively lower temperature difference is larger.

2. Check temperature and pressure of refrigeration cycle in cooling mode.

Suction pressure (Compared with the normal value)	Temperature of Discharge Air (Compared with the normal valve)	Cause of Trouble	Description
Higher	High	Defective compressor Defective 4-way reverse valve	Current is low.
	Normal	Excessive amount of refrigerant	High pressure does not quickly rise at the beginning of operation.
Lower	Higher	Insufficient amount of refrigerant (Leakage) Clogging	Current is low.

NOTICE

1. The suction pressure is usually 8.5~9.5kg/cm2G(Cooling) at normal condition.(R410A)
2. The temperature can be measured by attaching the thermometer to the low pressure tubing and wrap it with putty.

Copyright ©2013 LG Electronics. Inc. All right reserved.
Only for training and service purposes

LGE Internal Use Only

6. Electronic Parts

6.1 The Product doesn' t operate at all

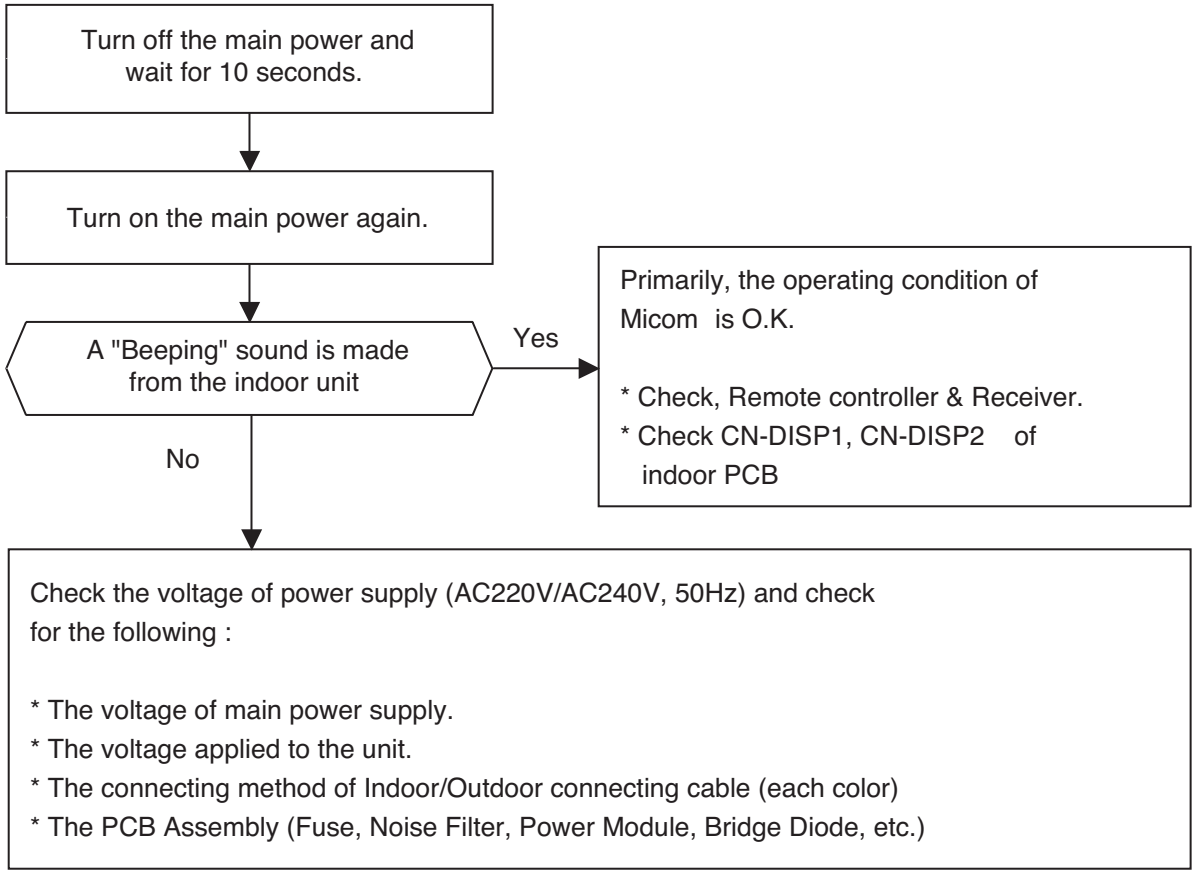

The operation check of the Indoor PCB Assembly		
Procedure	**Specification**	**Remedy**
1) The input voltage of power module.	1) AC230V ± 30V : Check the rated voltage	1) Check the power outlet.
2) The output voltage of power module.	2) 12V ± 3V	2) Replace PCB Assembly
4) IC04D(7805)	4) DC5V	4) Replace PCB Assembly
5) IC01A(KIA7036)	5) The voltage of micom pin 19 : DC4.5V↑	5) Replace PCB Assembly

Copyright ©2013 LG Electronics. Inc. All right reserved.
Only for training and service purposes

LGE Internal Use Only

6.2 The Product doesn't operate with the remote controller

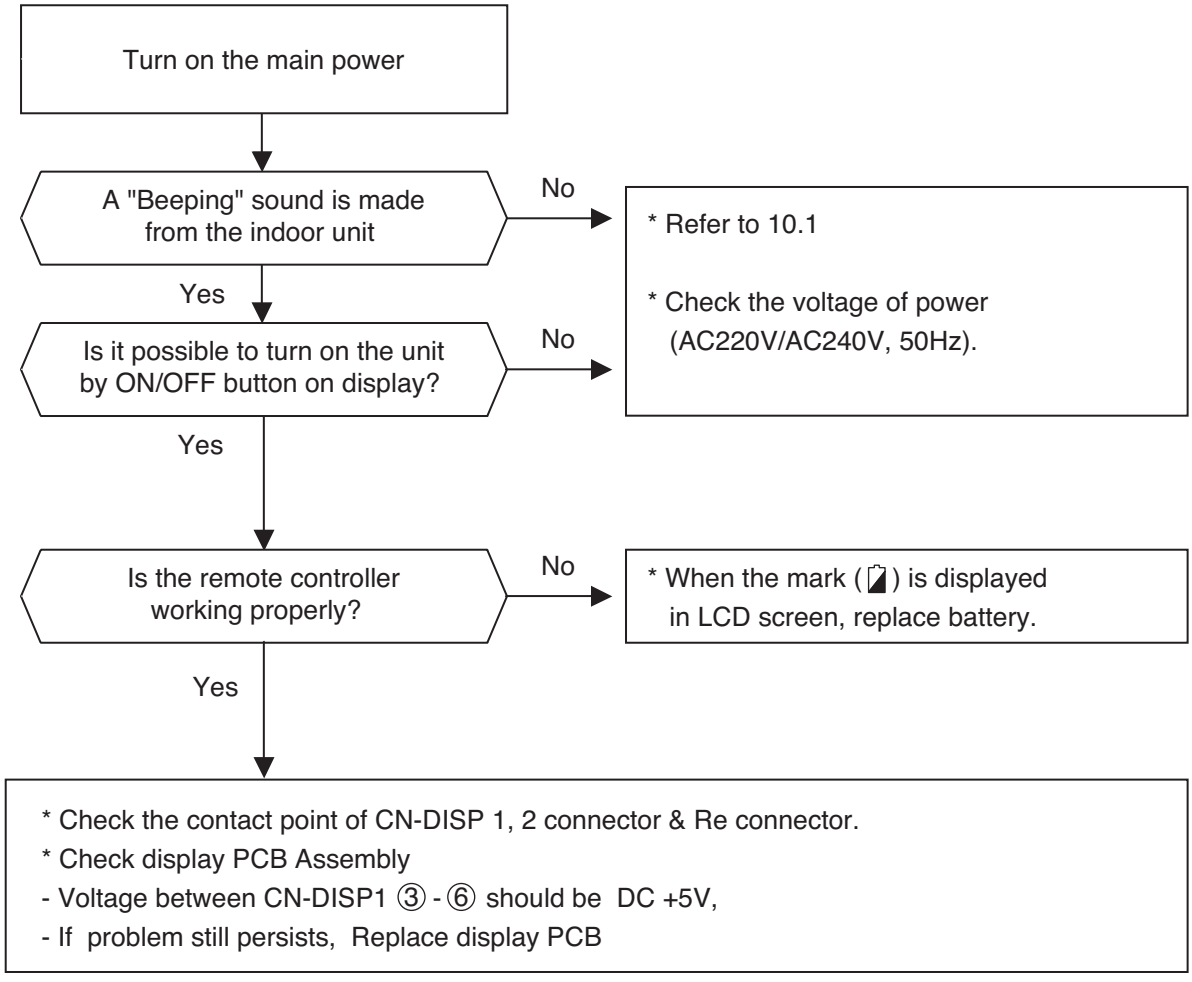

Copyright ©2013 LG Electronics. Inc. All right reserved.
Only for training and service purposes

LGE Internal Use Only

6.3 The Compressor/Outdoor Fan are don't operate

Turn on the main power.

↓

Operate Cooling Mode by setting the disired temperature of the remote controller is less than one of the Indoor temperature by 1°C at least.

↓

When in air circulation mode, compressor/outdoor fan is stopped.

↓

Check the sensor for Indoor temperature is attatched as close as to be effected by the themperature of Heat Exchange (EVA.)

↓

When the sensor circuit for Indoor temperature and connector are in bad connection or are not engaged, Compressor/Outdoor fan is stopped.

- Check the related circuit of R02H(12.1K), R01H(1K), R04H(6.2K), R03H(1K), C01H(102), C02H(102), Micom(pin No. ⑪, ⑫).
- Check the Indoor temperature sensor is disconnected or not (about 10K at 25°C).

↓

Check the Relay(RY-PWR, RY-START) for driving Compressor.

- Check the voltage between brown and blue cable of terminal to connect the Outdoor (About AC220V / 240V).
- Check the related circuit of relay in Outdoor PCB Ass'y.

Check Point	Comp. ON	Comp. OFF
Between Micom(No. 19) and GND	DC 5V	DC 0V
Between IC01M(No. 10) and GND	DC 1V↓	DC 12V

↓

Turn off main power.

↓

Check the electrical wiring diagram of Outdoor side.
Check the open or short of connecting wires between Indoor and Outdoor.

Copyright ©2013 LG Electronics. Inc. All right reserved.
Only for training and service purposes

LGE Internal Use Only

6.4 When indoor Fan does not operate.

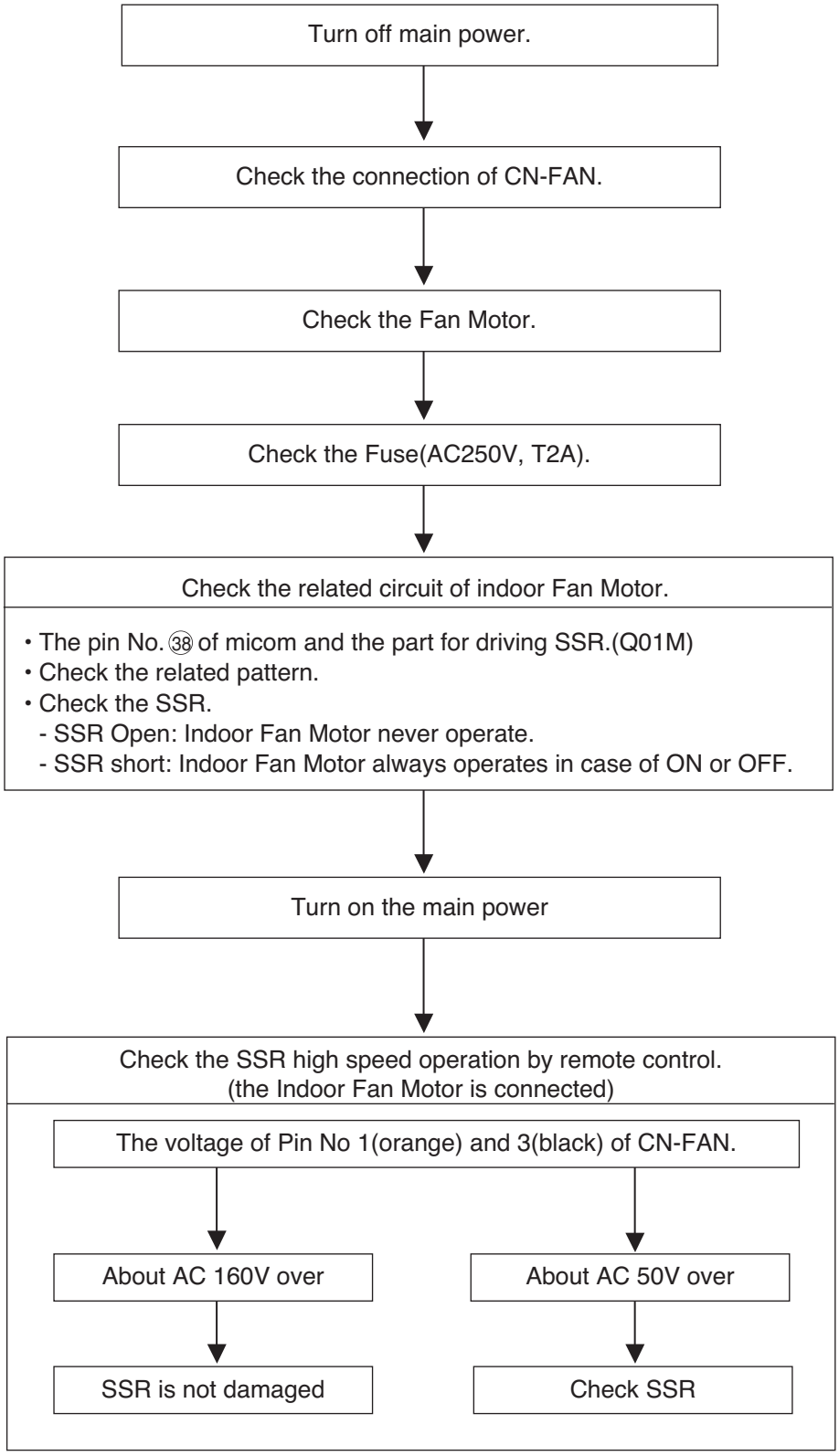

Copyright ©2013 LG Electronics. Inc. All right reserved.
Only for training and service purposes

LGE Internal Use Only

6.5 When the louver does not operate.

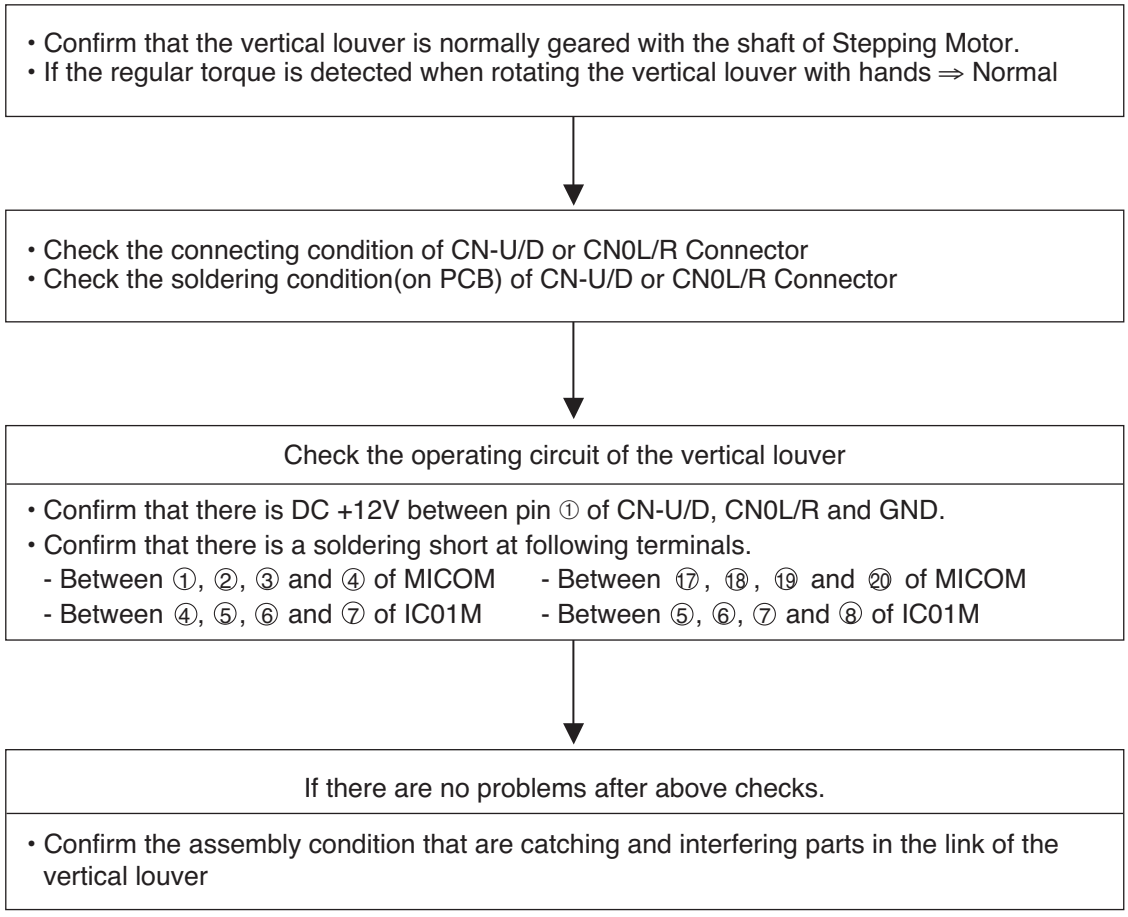

Copyright ©2013 LG Electronics. Inc. All right reserved.
Only for training and service purposes

LGE Internal Use Only

6.6 Troubleshooting Indoor Error

Display code	Title	Cause of error	Check point & Normal condition
01	Indoor air sensor	• Connector connection error • Faulty PCB • Faulty sensor (Open / Short)	Normal resistor : 10KΩ/ at 25˚C (Unplugged) Normal voltage : 2.5Vdc / at 25˚C(Plugged) Refer to sensor resistance table.
02	Indoor inlet pipe sensor	• Connector connection error • Faulty PCB • Faulty sensor (Open / Short)	Normal resistor : 5KΩ/ at 25˚C(Unplugged) Normal voltage : 2.5Vdc / at 25˚C(Plugged) Refer to sensor resistance table.
06	Indoor outlet pipe sensor	• Connector connection error • Faulty PCB • Faulty sensor (Open / Short)	Normal resistor : 5KΩ/ at 25˚C(Unplugged) Normal voltage : 2.5Vdc / at 25˚C(Plugged) Refer to sensor resistance table.

Check Flow Chart

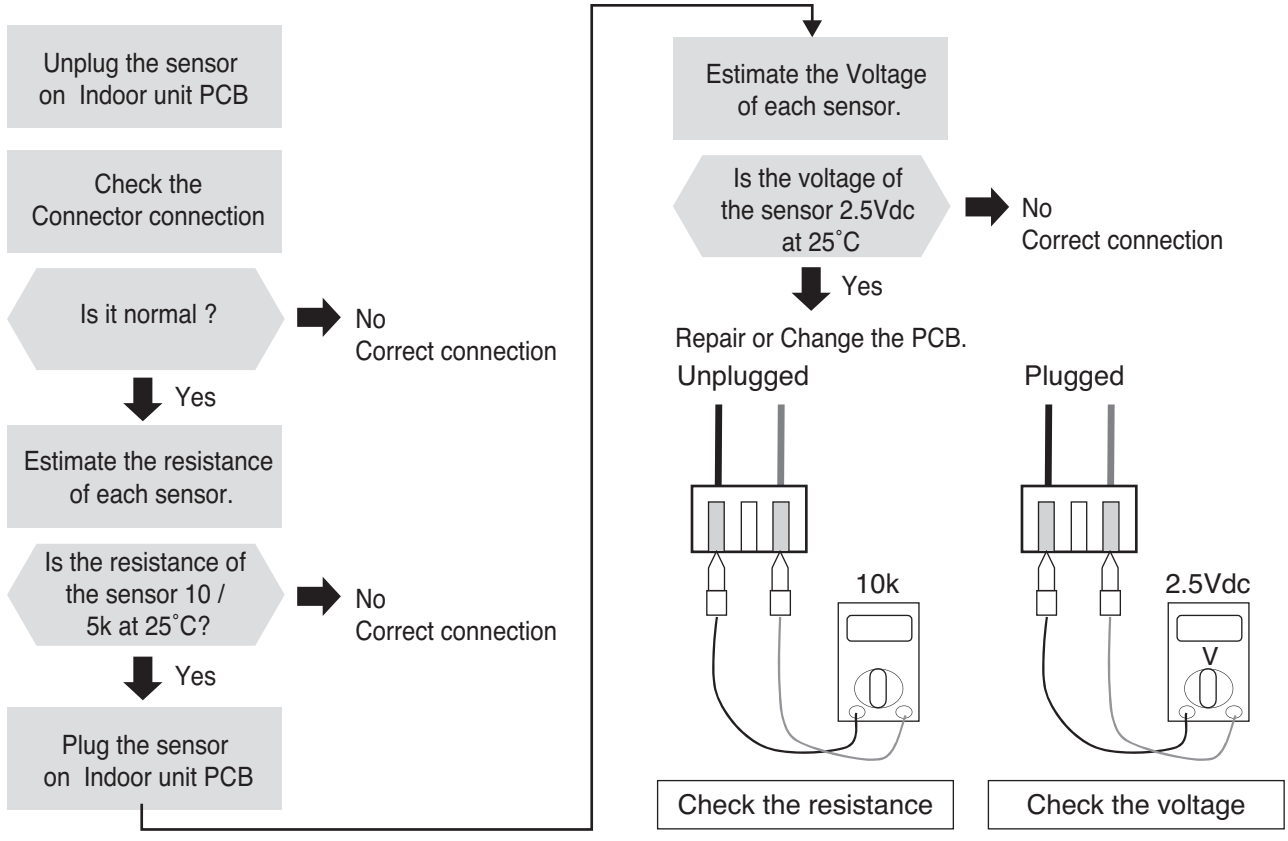

Check Point

1. Unplug the sensor on Indoor unit PCB.
2. Estimate the resistance of each sensor.
3. If the resistance of the sensor is 10KΩ/ 5KΩ at 25°C, then sensor is normal.
4. If the resistance of the sensor is 0 KΩ or ∞, then sensor is abnormal. → Change the sensor.
5. Plug the sensor on Indoor unit PCB and Power ON.
6. Estimate the voltage of each sensor.
7. If the voltage of the sensor is 2.5Vdc at 25°C, then sensor is normal.
8. If the resistance of the sensor is 0 or 5Vdc, then sensor is abnormal. → Repair or Change the PCB.

Copyright ©2013 LG Electronics. Inc. All right reserved.
Only for training and service purposes

LGE Internal Use Only

Display code	Title	Cause of error	Check point & Normal condition
03	Communication Error (Wired remote controller)	• Connector connection error • Faulty PCB / Remote controller • Connection wire break	• Connection of wire • Main PCB Volt. DC12V • Noise interference

Check Flow Chart

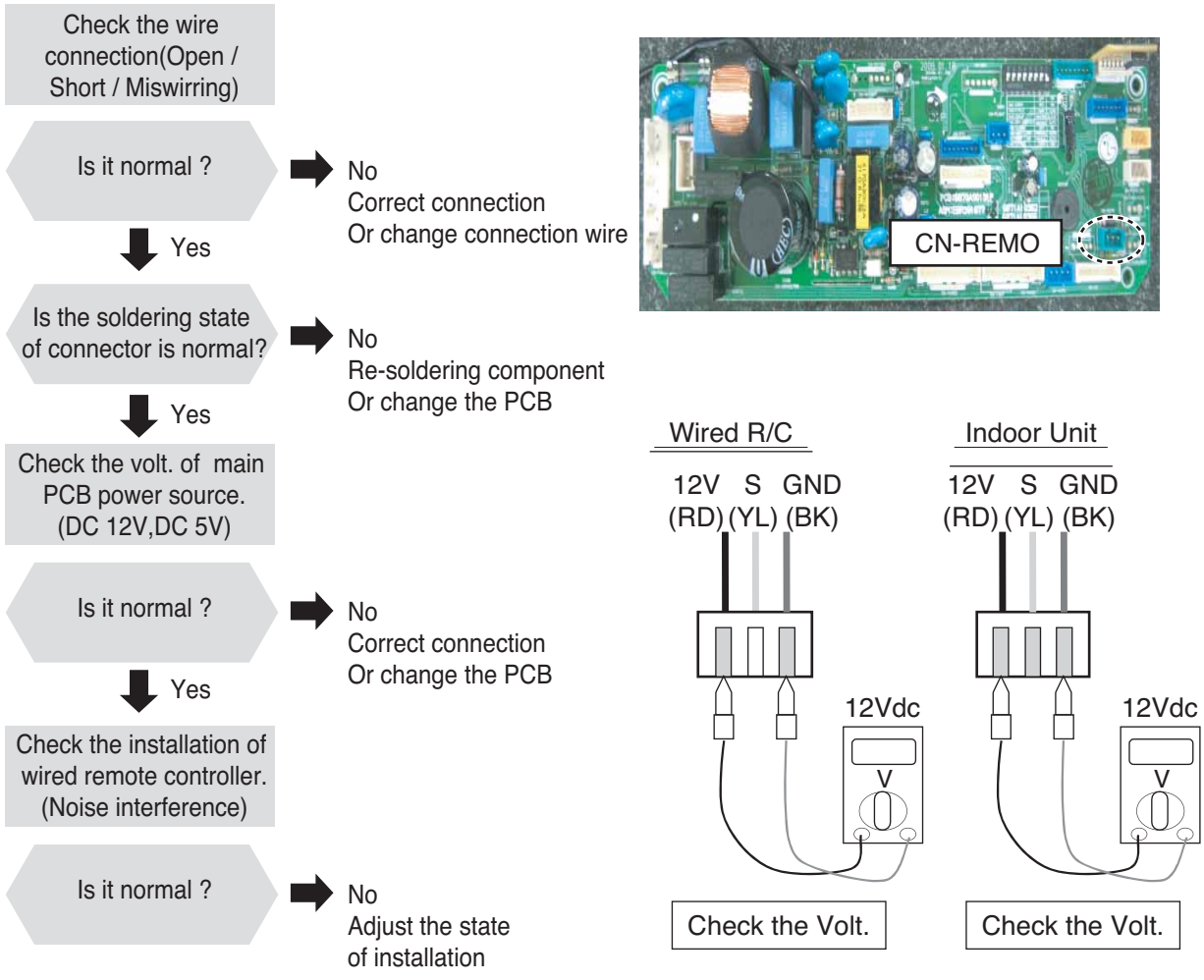

Check Point

1. Check the wire connection. (Open / Short) → Repair the connection
2. Check the soldering state of connector. (Soldered poorly) → Repair or Change the PCB.
3. Check the volt. Of main PCB power source. (DC 12V) → Repair or Change the main PCB.
4. Check the installation of wired remote controller. (Noise interference) → Adjust the state of installation

Copyright ©2013 LG Electronics. Inc. All right reserved.
Only for training and service purposes

LGE Internal Use Only

Display code	Title	Cause of error	Check point & Normal condition
04	Drain pump / Float switch	• Float switch open. (Normal : short) • Water over flow	• The connection of wire (Drain pump/ Float switch) • Drain pump power input. (220V) • Drain tube installation. • Indoor unit installation. (Inclination)

Check Flow Chart

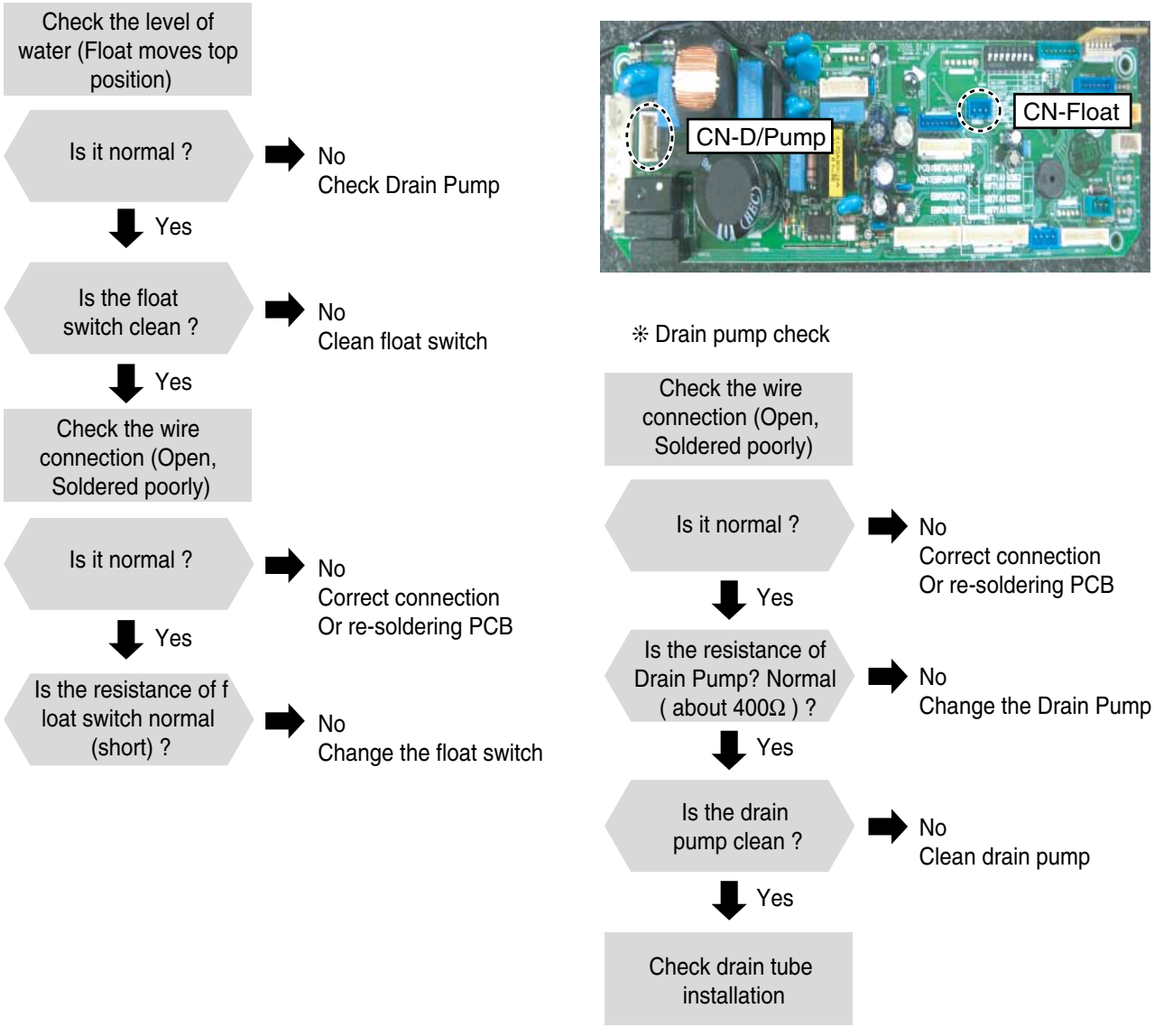

Check Point

1. Check the wire connection. (Open, Soldered poorly) → Repair the connection or change the PCB.
2. Check the resistance of float switch (Abnormal : Open, Normal : short) → Check the float switch.
3. Check the level of water
4. Check the volt. Of Drain pump power supply. (AC 230V) → Repair or Change the main PCB.

Copyright ©2013 LG Electronics. Inc. All right reserved.
Only for training and service purposes

LGE Internal Use Only

Display code	Title	Cause of error	Check point & Normal condition
09	Indoor EEPROM Check Sum Error	• Check sum error	1. Check the poor soldering 2. Check the insertion condition of the EEPROM 3. Check the PCB Connection

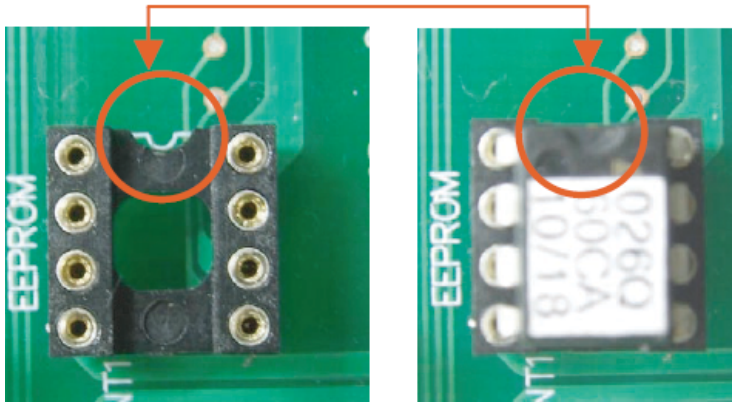

<EEPROM Direction Check Point>

Check Point

1. Check the EEPROM Direction
2. If the EEPROM value & the Program value are not matched, the Code is Displayed
3. After Checking the connection and Insertion, replace the PCB or Option PCB

Copyright ©2013 LG Electronics. Inc. All right reserved.
Only for training and service purposes

LGE Internal Use Only

Display code	Title	Cause of error	Check point & Normal condition
10	Indoor BLDC Fan Motor Lock	The Fan is not operated properly	Check the Indoor fan locking

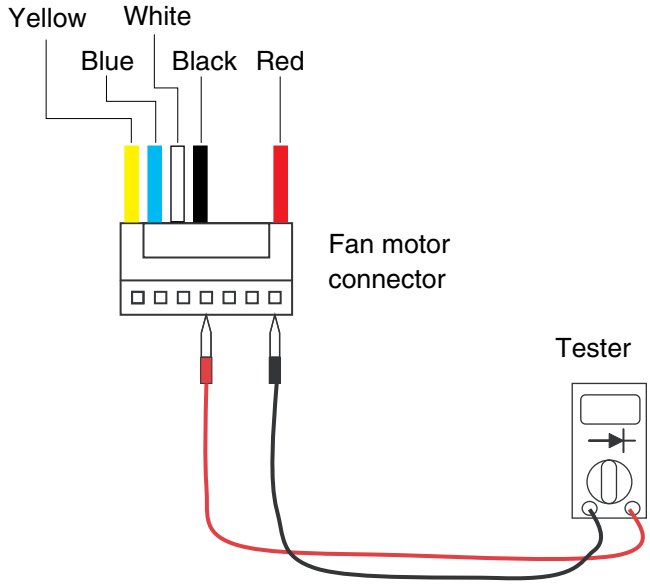

Check Point

Check the PCB during the Power on

1. Check the Voltage Red line to Black line
   → The Voltage is about [input voltage x 1.414]
   → if the Voltage does not come with the above Voltage,
   → Check the power input
   → Replace the PCB & Motor
2. Check the Voltage Black line to White
   → the Voltage is DC 15V
   → Check the Power input
   → Replace the motor

Check the Motor

1. Check the shaft
   → if the shaft is not turn smoothly, the Motor Power IC is defected
   → replace the motor
2. Check the motor resistance(if the shaft is turn smoothly, check the resistance)
   → Check Red line to Black line, Blue line to Black line
   → The resistance should infinite
   → replace the motor

Copyright ©2013 LG Electronics. Inc. All right reserved.
Only for training and service purposes

LGE Internal Use Only

Display code	Title	Cause of error	Check point & Normal condition
05 / 53	Communication (Indoor↔Outdoor)	• The connector for transmission is disconnected. • The connecting wires are misconnected. • The communication line is break • Outdoor PCB is abnormal. • Indoor PCB is abnormal. • Synchro # of IDU is abnormal.	• Check power input AC 230V. (Outdoor, Indoor) • Check connector for transmission • Check wires are misconnecting. • Check transmission circuit of outdoor PCB • Check transmission circuit of indoor PCB • Check # of IDU setting DIP SW

Check Flow Chart

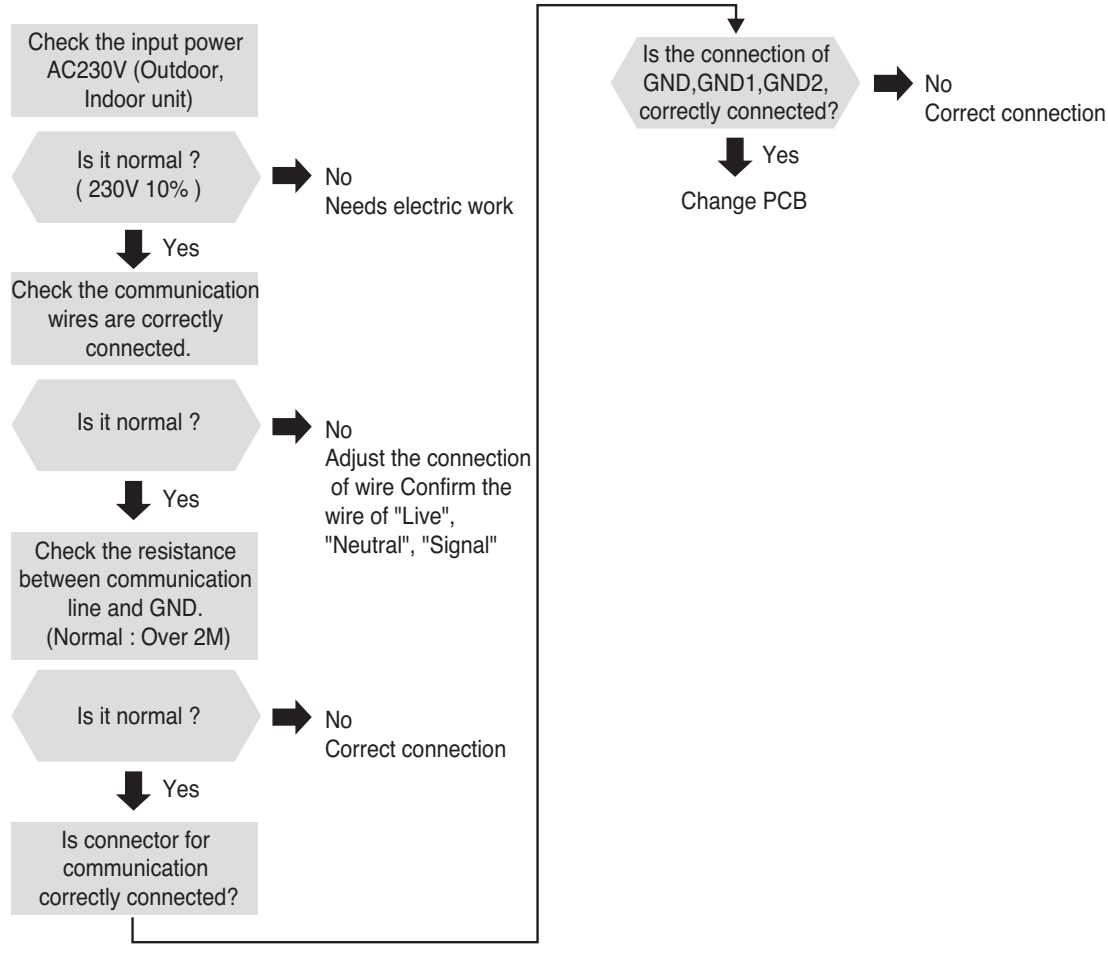

Copyright ©2013 LG Electronics. Inc. All right reserved.
Only for training and service purposes

LGE Internal Use Only

6.7 Troubleshooting Outdoor Error

▶ **A2UW14GFA0 / A2UW16GFA0 / A3UW18GFA0 / A3UW21GFA0**

Display code	Title	Cause of error	Check point & Normal condition
21	High current into the compressor	• Compressor blocked • Disconnection/shortcircuit inside compressor • Over load operation (Outdoor fan constraint, screened, blocked) • Burned parts inside PCB	• Check compressor constraint • Check compressor wire open/short • Check compressor insulation damage • Check outdoor fan constraint / screened / flow structure • Check if IPM burned

warning Before checking PCB or each outdoor electric parts, wait for 3 minutes after the power is off. When measuring at standby state of power supply, after checking the measurement mode of the meter, be careful of the short-circuits with other parts.

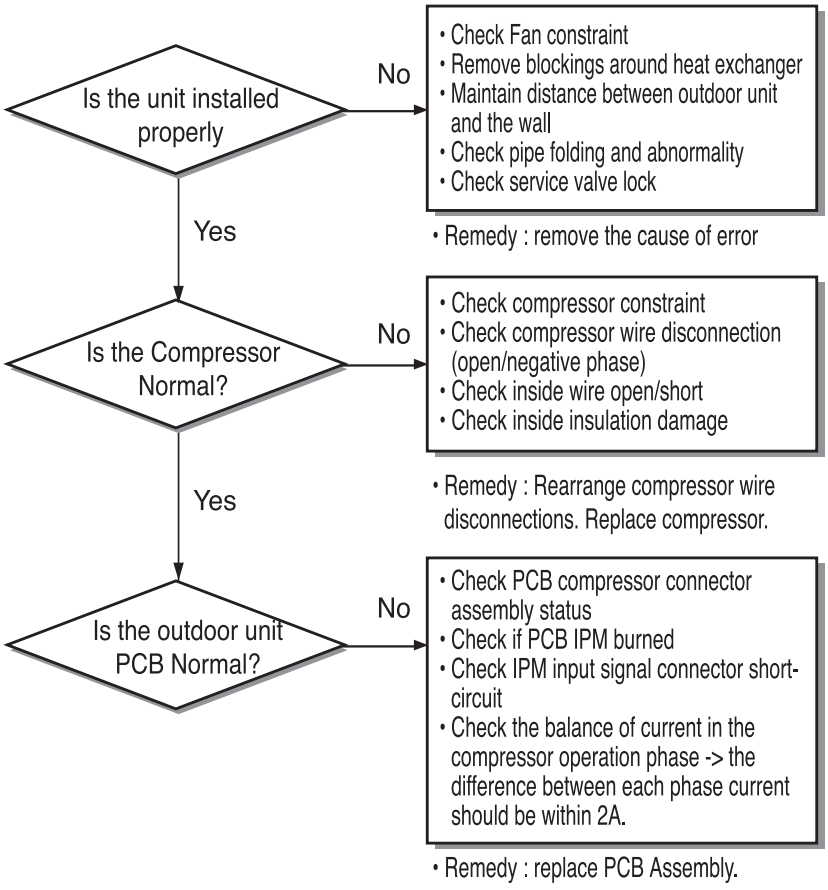

• Check for short-circuit of PCB IPM Input Signal Connector.

1. Set as the multi-tester resistance measurement mode.
2. Check the short-circuit between the input signal pins at the IPM(SPM3) lower parts in Power-off state.



Copyright ©2013 LG Electronics. Inc. All right reserved.
Only for training and service purposes

LGE Internal Use Only

• Verifying compressor burn

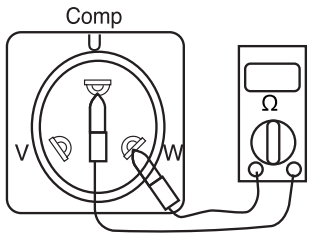

1. Remove the connectors to the PCB.
2. Measure the resistance between the lines of each terminal of the compressor. (Refer to Table 1)
3. Measure the resistance between the each terminal and the chassis(pipe) of the compressor. (Refer to Table 2)
4. If the measurements are distinctively different from Table 1 and 2, the compressor is decided to be burned.

Table 1

Model.	Resistance(Ω) at 20°C	
AUUQ18GH1/AUUQ21GH1/AUUQ24GH1(ATUQ18GPLE3/ ATUQ21GPLE3/ ATUQ24GNLE3) (AVUQ18GJLA0/ AVUQ21GJLA0 / AVUQ24GJLA0) (ABUQ18GHLA0/ ABUQ21GHLA0/ ABUQ24GGLA0) (ABUQ18GL2A0/ ABUQ21GL2A0/ ABUQ24GL3A0)	U-V	1.040(at25°C)
	V-W	1.040(at25°C)
	W-U	1.040(at25°C)
AUUQ36GH1 (ATUQ36GMLE3) (AVUQ36GKLA0) (ABUQ36GGLA0)	U-V	0.628(at 25˚C)
	V-W	0.628(at 25˚C)
	W-U	0.628(at 25˚C)
AUUQ42GH1/ AUUQ48GH1/ AUUQ54GH1 (ATUQ42GMLE3/ ATUQ48GMLE3/ ATUQ54GMLE3) (AVUQ42GLLA0/ AVUQ48GLLA0/ AVUQ54GLLA0) (ABUQ42GRLA0/ ABUQ48GRLA0/ ABUQ54GRLA0)	U-V	0.438(at 25˚C)
	V-W	0.438(at 25˚C)
	W-U	0.438(at 25˚C)

Table 1

Model	Resistance(Ω) at 20°C	
	Terminal	Inverter comp.
AUUQ18GH1 /AUUQ21GH1/ AUUQ24GH1 (ATUQ18GPLE3/ ATUQ21GPLE3/ ATUQ24GNLE3) (AVUQ18GJLA0/ AVUQ21GJLA0 / AVUQ24GJLA0) (ABUQ18GHLA0/ ABUQ21GHLA0/ ABUQ24GGLA0) (ABUQ18GL2A0/ ABUQ21GL2A0/ ABUQ24GL3A0)	U-GND	1MΩ ↑
	V-GND	1MΩ ↑
	W-GND	1MΩ ↑
AUUQ36GH1 (ATUQ36GMLE3) (AVUQ36GKLA0) (ABUQ36GGLA0)	U-GND	2MΩ
	V-GND	2MΩ
	W-GND	2MΩ
AUUQ42GH1/ AUUQ48GH1/ AUUQ54GH1 (ATUQ42GMLE3/ ATUQ48GMLE3/ ATUQ54GMLE3) (AVUQ42GLLA0/ AVUQ48GLLA0/ AVUQ54GLLA0) (ABUQ42GRLA0/ ABUQ48GRLA0/ ABUQ54GRLA0)	U-GND	2MΩ
	V-GND	2MΩ
	W-GND	2MΩ

Copyright ©2013 LG Electronics. Inc. All right reserved.
Only for training and service purposes

LGE Internal Use Only

• Verifying IPM burn

1. Remove the connectors to the PCB.
2. Set Multi-tester as Diode voltage measurement mode.
3. Measure voltages of P~U / P~V / P~W as shown in figure 1 below.
4. Measure voltages of U~Nu / V~Nu / W~Nu as shown in figure 2 below.
5. If the measurements are distinctively different as in the figures, the IPM is decided to be burned.

AUUQ18GH1 /AUUQ21GH1/ AUUQ24GH1
(ATUQ18GPLE3/ ATUQ21GPLE3/ ATUQ24GNLE3)
(AVUQ18GJLA0/ AVUQ21GJLA0 / AVUQ24GJLA0)
(ABUQ18GHLA0/ ABUQ21GHLA0/ ABUQ24GGLA0)
(ABUQ18GL2A0/ ABUQ21GL2A0/ ABUQ24GL3A0)

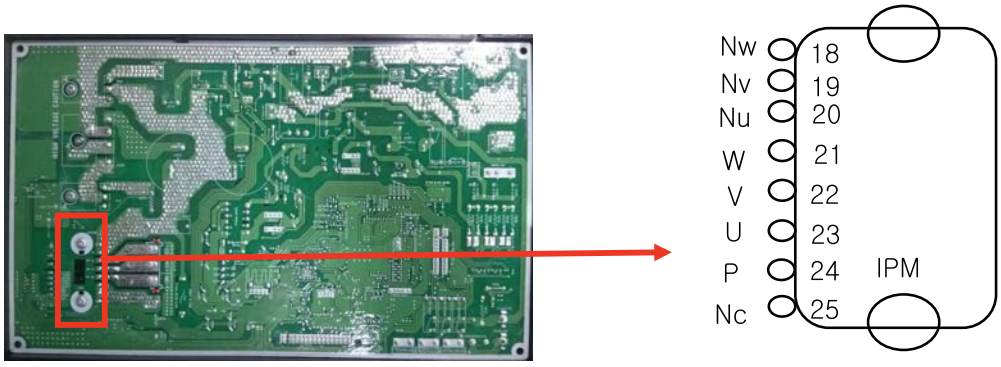

[IPM Position & Pin number]

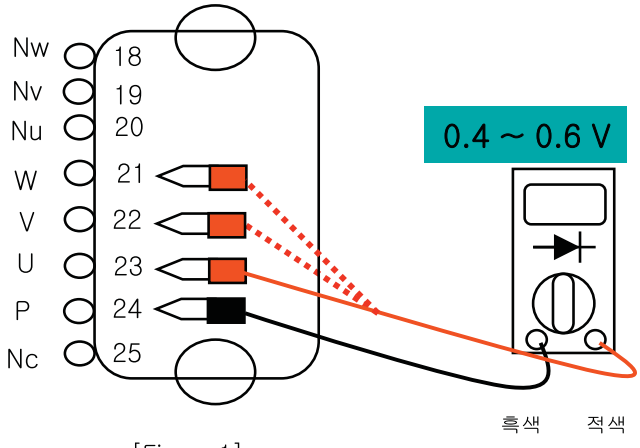

[Figure 1]

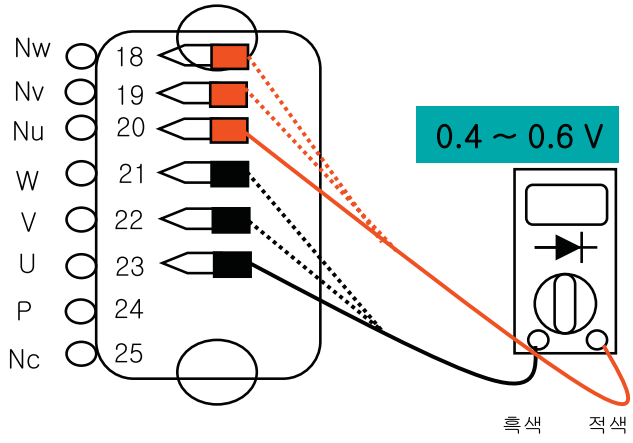

[Figure 2]

Copyright ©2013 LG Electronics. Inc. All right reserved.
Only for training and service purposes

LGE Internal Use Only

■ AUUQ36GH1 / ATNQ36GMLE3
ABNQ36GGLA0 / AVNQ36GKLA0

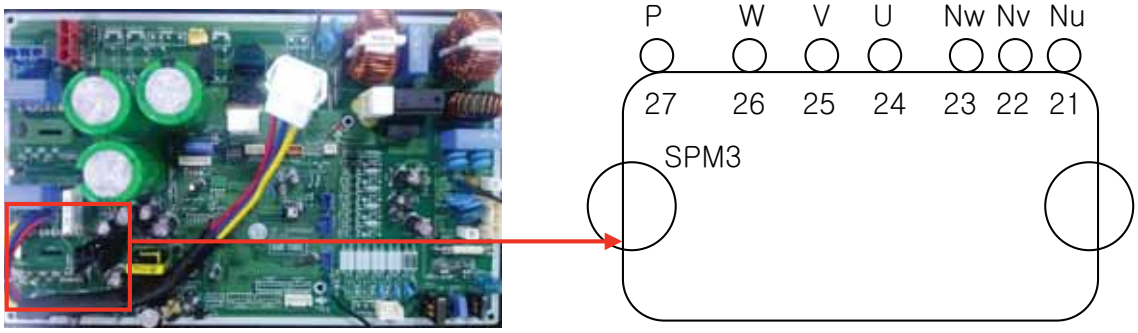

1. Wait until inverter PCB DC voltage is discharged after main power off.
2. Pull out V, V, W COMP connector.
3. Set multi tester to resistance mode.
4. If the value between P and N terminal of IPM is short(0Ω) or open(hundreds MΩ), PCB needs to be replaced.(IPM damaged)
5. Set the multi tester to diode mode.
6. In case measured value is different from the table, PCB needs to be replaced.(PCB damaged).

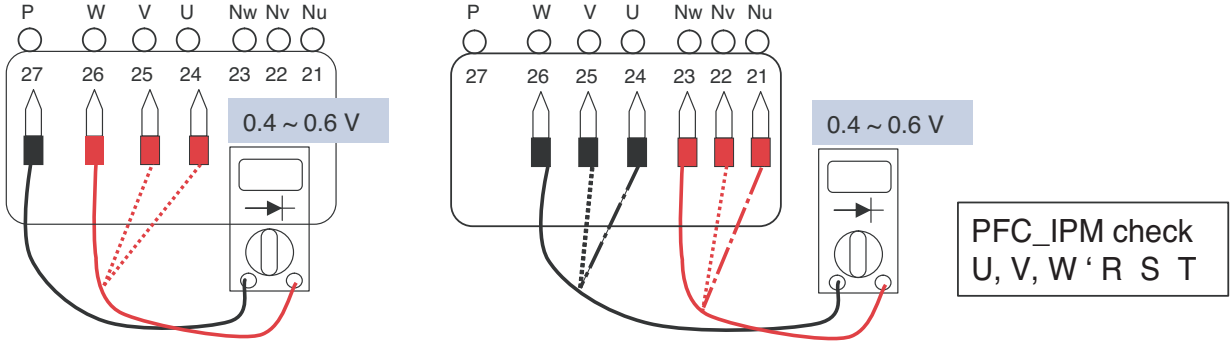

Copyright ©2013 LG Electronics. Inc. All right reserved.
Only for training and service purposes

LGE Internal Use Only

*** AUUQ42GH1/ AUUQ48GH1/ AUUQ54GH1**
(ATUQ42GMLE3/ ATUQ48GMLE3/ ATUQ54GMLE3)
(AVUQ42GLLA0/ AVUQ48GLLA0/ AVUQ54GLLA0)
(ABUQ42GRLA0/ ABUQ48GRLA0/ ABUQ54GRLA0)

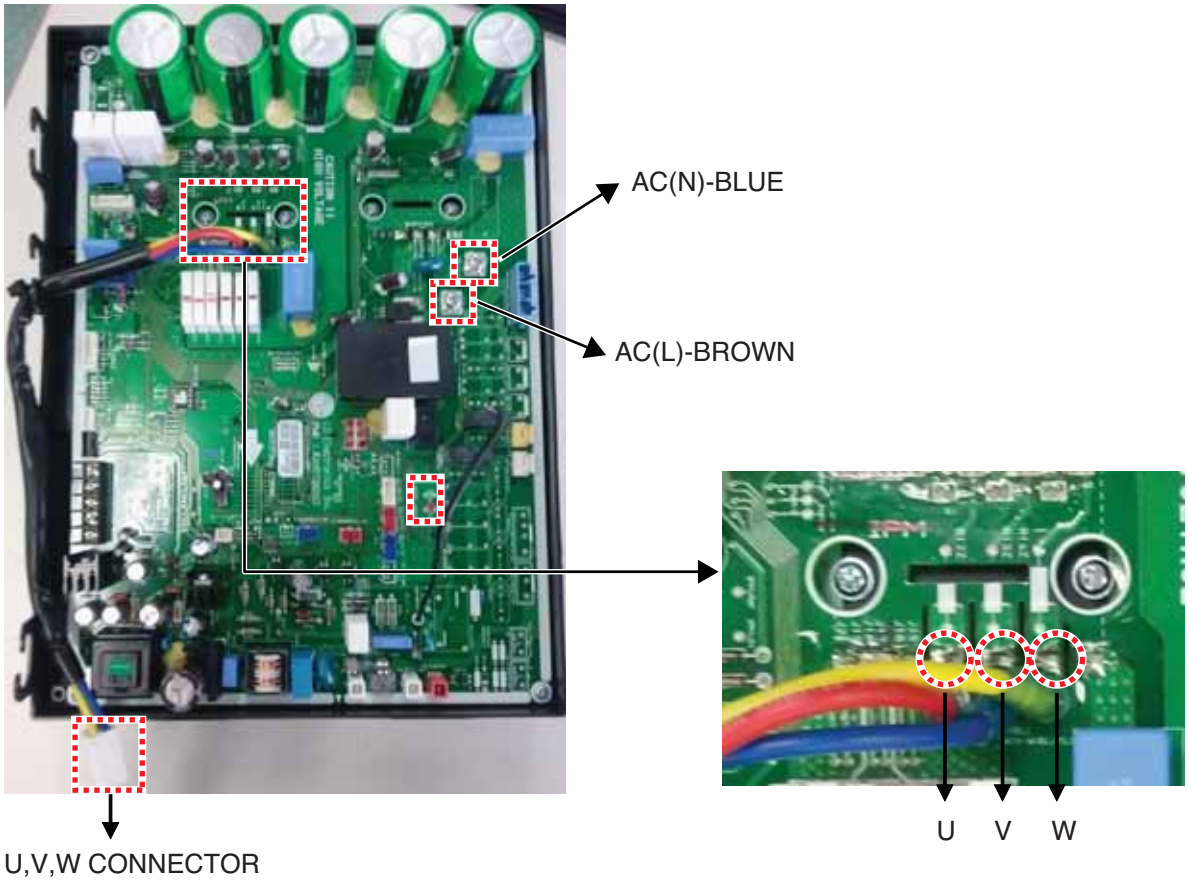

1. Wait until inverter PCB DC voltage is discharged after main power off.
2. Pull out AC(L), AC(N) connectors and U,V,W COMP Connector.
3. Set multi tester to resistance mode.
4. If the value between P and N terminal of IPM is short(0Ω) or open(hundreds MΩ), PCB needs to be replaced.(IPM damaged)
5. Set the multi tester to diode mode.
6. In case measured value is different from the table, PCB needs to be replaced.(PCB damaged).

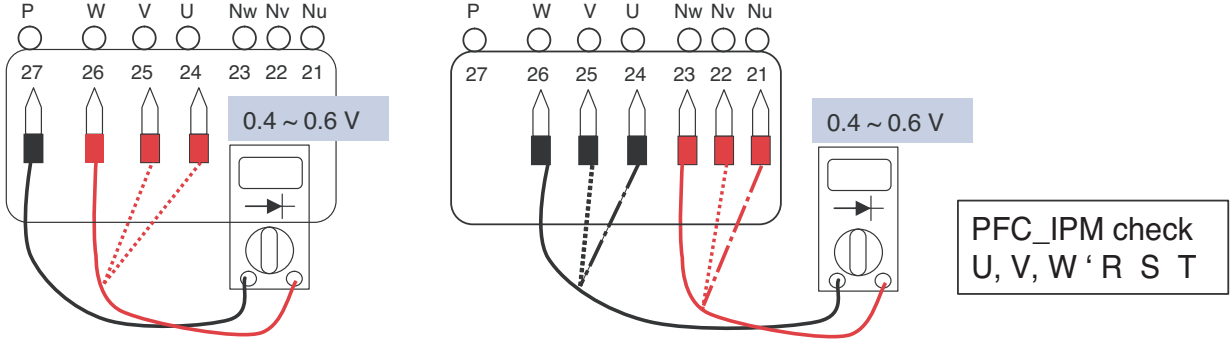

Copyright ©2013 LG Electronics. Inc. All right reserved.
Only for training and service purposes

LGE Internal Use Only

Display code	Title	Cause of error	Check point & Normal condition
22	Max. C/T	Input Over Current	1. Malfunction of Compressor 2. Blocking of Pipe 3. Low Voltage Input 4. Refrigerant, Pipe length, Blocked...

WARNING

Before checking PCB or each outdoor electric parts, wait for 3 minutes after the power is off. When measuring at standby state of power supply, after checking the measurement mode of the meter, be careful of the short-circuits with other parts.

■ Error Diagnosis and Countermeasure Flow Chart

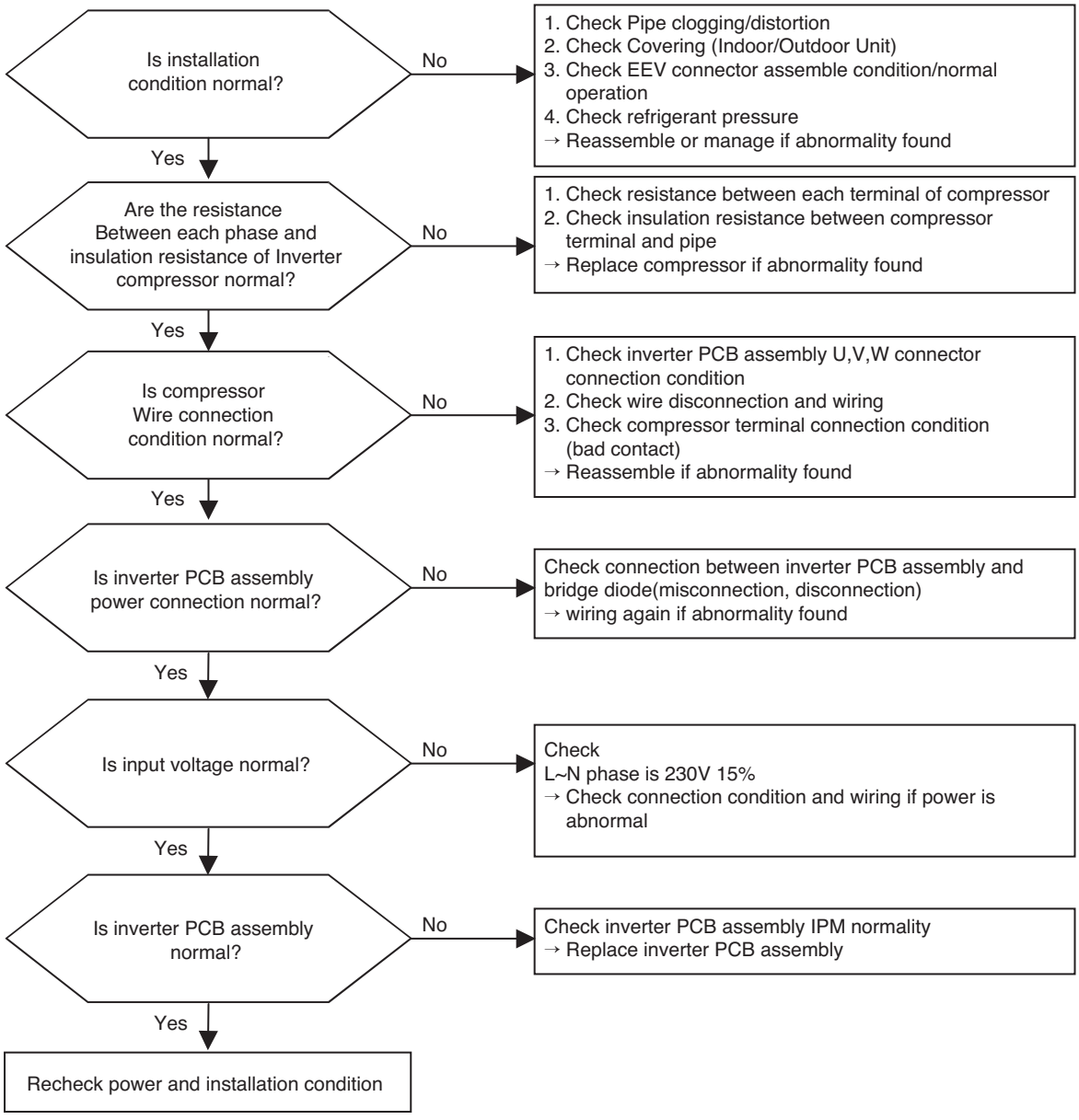

Copyright ©2013 LG Electronics. Inc. All right reserved.
Only for training and service purposes

LGE Internal Use Only

Check Point

1. Check the power source.(230V ±15%)
2. Check the fan operation is right.
3. Check the current.
4. Check the install condition.
5. Check the CT Sensor Output signal
   (AUUQ36GH1 / ATNQ36GMLE3 - Check output the CT Sensor : DC 2.5±0.2V)
   ABNQ36GGLA0 / AVNQ36GKLA0
   AUUQ42GH1/ AUUQ48GH1/ AUUQ54GH1 - Check output pin 2.3 of the CT Sensor : DC 2.5±0.2V
   (ATUQ42GMLE3/ ATUQ48GMLE3/ ATUQ54GMLE3)
   (AVUQ42GLLA0/ AVUQ48GLLA0/ AVUQ54GLLA0)
   (ABUQ42GRLA0/ ABUQ48GRLA0/ ABUQ54GRLA0)

*** AUUQ18GH1 /AUUQ21GH1/ AUUQ24GH1**
(ATUQ18GPLE3/ ATUQ21GPLE3/ ATUQ24GNLE3)
(AVUQ18GJLA0/ AVUQ21GJLA0 / AVUQ24GJLA0)
(ABUQ18GHLA0/ ABUQ21GHLA0/ ABUQ24GGLA0)
(ABUQ18GL2A0/ ABUQ21GL2A0/ ABUQ24GL3A0)

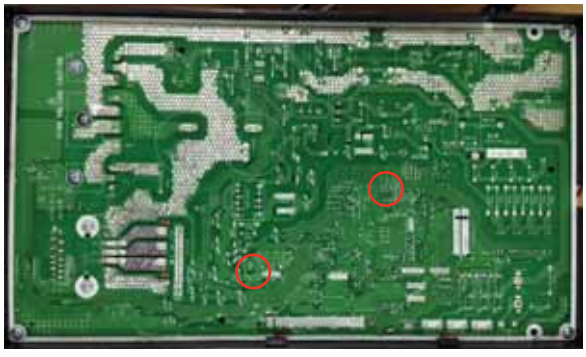

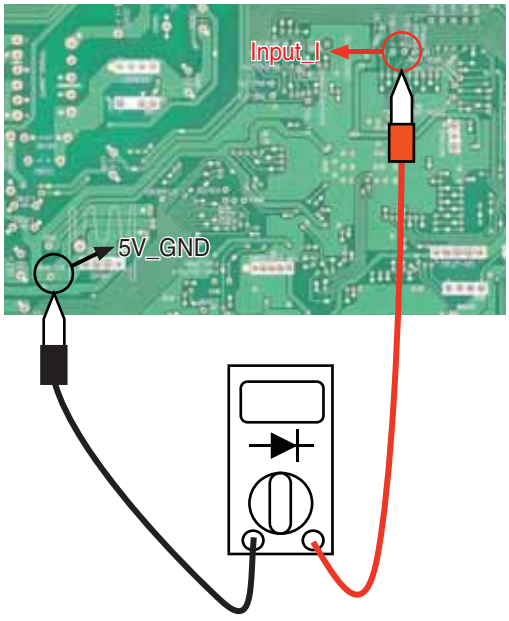

Copyright ©2013 LG Electronics. Inc. All right reserved.
Only for training and service purposes

LGE Internal Use Only

*** AUUQ36GH1 / ATNQ36GMLE3**
ABNQ36GGLA0 / AVNQ36GKLA0

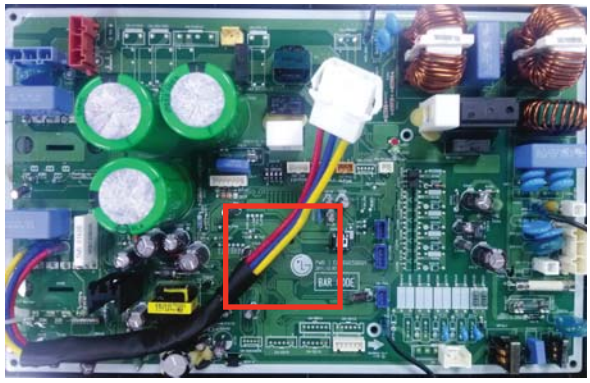

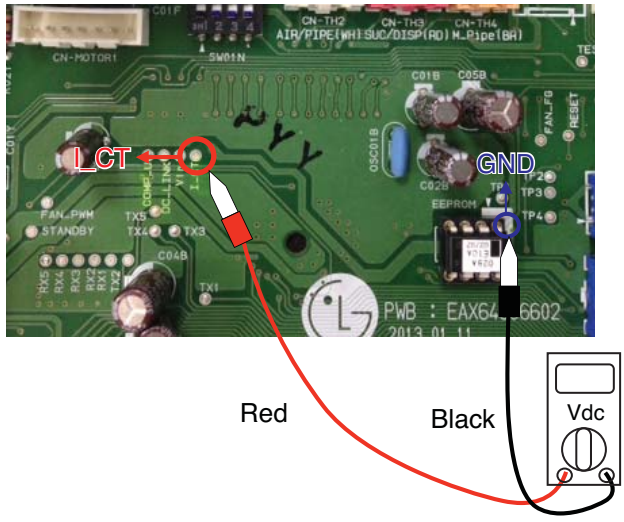

<CT Sensing Check Point>

*** AUUQ42GH1/ AUUQ48GH1/ AUUQ54GH1**
(ATUQ42GMLE3/ ATUQ48GMLE3/ ATUQ54GMLE3)
(AVUQ42GLLA0/ AVUQ48GLLA0/ AVUQ54GLLA0)
(ABUQ42GRLA0/ ABUQ48GRLA0/ ABUQ54GRLA0)

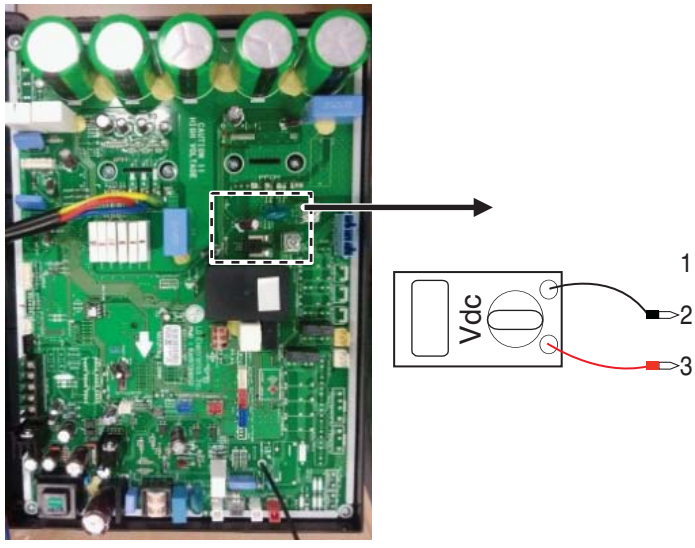

< Inverter PCB>

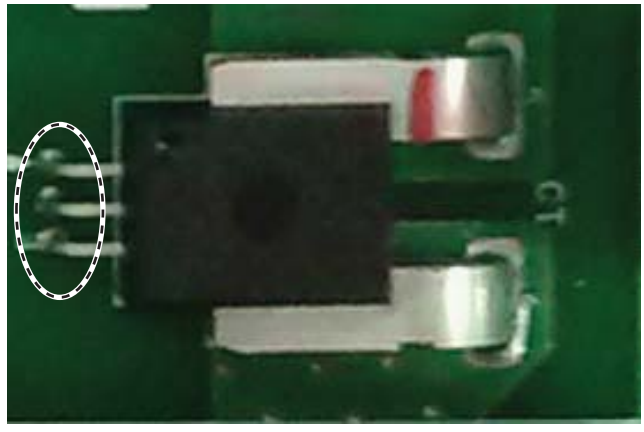

<CT Sensing Check Point>

Copyright ©2013 LG Electronics. Inc. All right reserved.
Only for training and service purposes

LGE Internal Use Only

Display code	Title	Cause of error	Check point & Normal condition
23	DC Link High / Low Volt	• DC Link Voltage is above 420Vdc • DC Link Voltage is below 140Vdc	• Check CN_(L), CN_(N) Connection • Check Input Voltage • Check PCB DC Link voltage sensor parts

WARNING

Before checking PCB or each outdoor electric parts, wait for 3 minutes after the power is off. When measuring at standby state of power supply, after checking the measurement mode of the meter, be careful of the short-circuits with other parts.

■ Error Diagnosis and Countermeasure Flow Chart

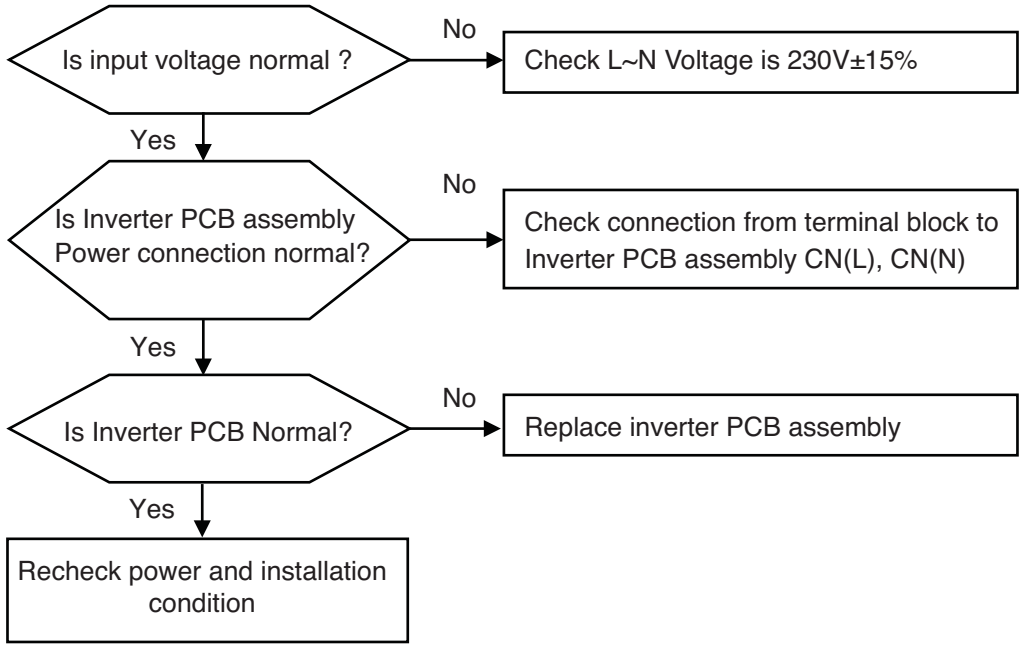

Copyright ©2013 LG Electronics. Inc. All right reserved.
Only for training and service purposes

LGE Internal Use Only

Check Point

1. Check the WCN_P(L),P(N) Connection condition at the Main PCB.(Refer to outdoor wiring diagram)
2. Check the DC Link voltage at not operating(280V ↑)
3. Check the DC Link voltage at Comp operating(340V ↑)
4. Check DC Link Sensing Signal :2.4~2.8V (Refer the Picture)

*** AUUQ18GH1 /AUUQ21GH1/ AUUQ24GH1**
(ATUQ18GPLE3/ ATUQ21GPLE3/ ATUQ24GNLE3)
(AVUQ18GJLA0/ AVUQ21GJLA0 / AVUQ24GJLA0)
(ABUQ18GHLA0/ ABUQ21GHLA0/ ABUQ24GGLA0)
(ABUQ18GL2A0/ ABUQ21GL2A0/ ABUQ24GL3A0)

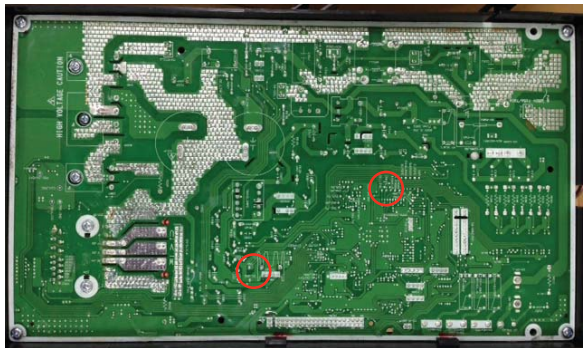

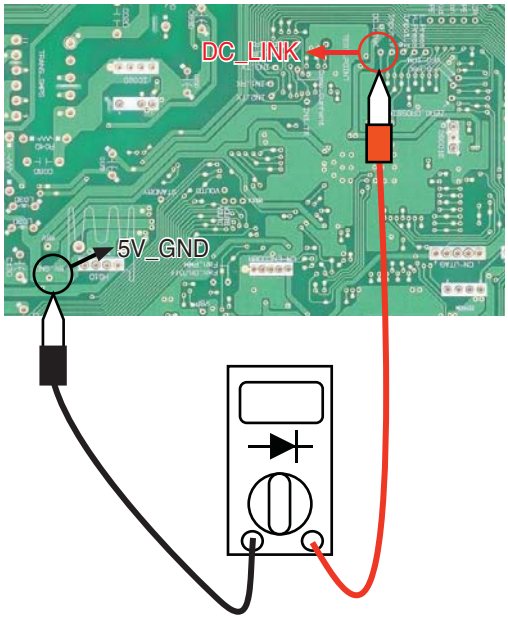

Copyright ©2013 LG Electronics. Inc. All right reserved.
Only for training and service purposes

LGE Internal Use Only

*** AUUQ36GH1 / ATNQ36GMLE3**
ABNQ36GGLA0 / AVNQ36GKLA0

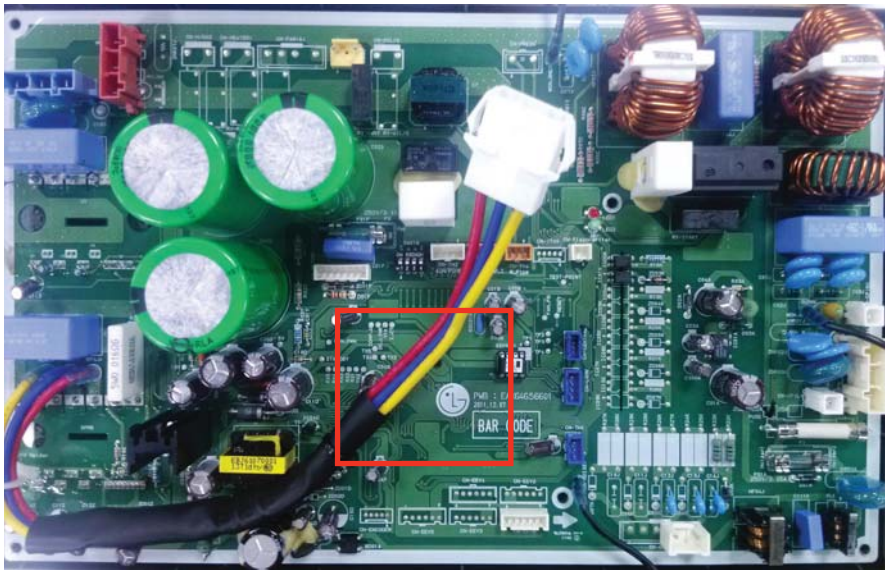

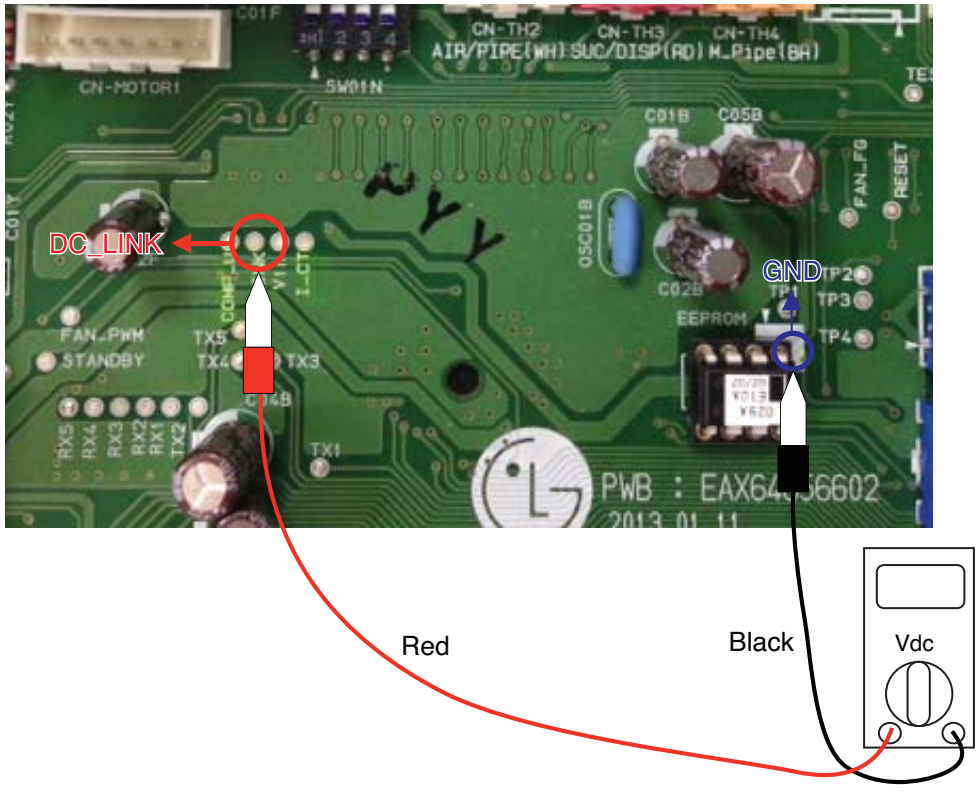

Copyright ©2013 LG Electronics. Inc. All right reserved.
Only for training and service purposes

▸ *AUUQ42GH1/ AUUQ48GH1/ AUUQ54GH1
(ATUQ42GMLE3/ ATUQ48GMLE3/ ATUQ54GMLE3)
(AVUQ42GLLA0/ AVUQ48GLLA0/ AVUQ54GLLA0)
(ABUQ42GRLA0/ ABUQ48GRLA0/ ABUQ54GRLA0)



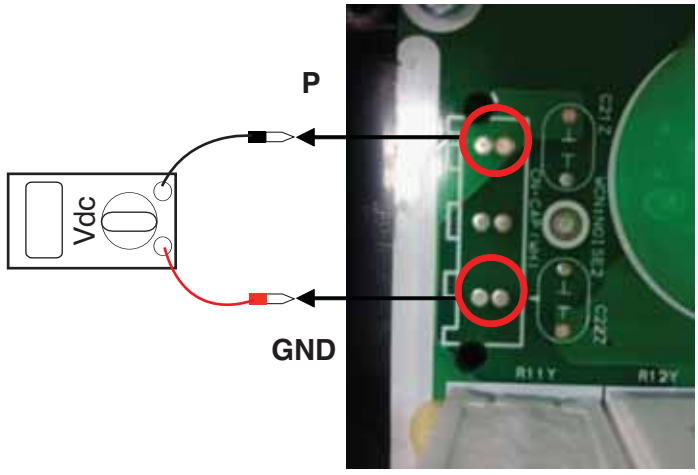

Copyright ©2013 LG Electronics. Inc. All right reserved.
Only for training and service purposes

LGE Internal Use Only

Display code	Title	Cause of error	Check point & Normal condition
25	Input voltage	• Abnormal Input voltage (140Vac , 300Vac)	• Check the power source. • Check the components.

■ Error Diagnosis and Countermeasure Flow Chart

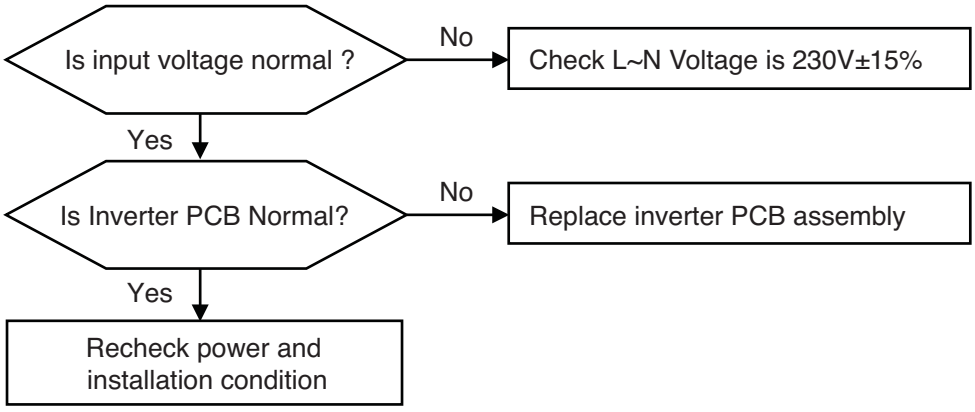

Check Point

1. Check the Input Voltage (L–N ➔ 230V±10%)
2. Check Input Voltage Sensor output voltage (2.5Vdc±10%)

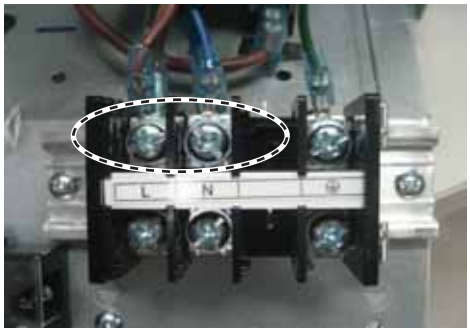

< Input Power Source Check Point >

Copyright ©2013 LG Electronics. Inc. All right reserved.
Only for training and service purposes

LGE Internal Use Only

Display code	Title	Cause of error	Check point & Normal condition
26	Over-current at the initial operation of the compressor / location sensing signal for compressor operation is not input	• Compressor Locking • Overload operation (Outdoor fan constraint, screened, blocked) • Burned parts inside PCB(IPM) • Burned PCB phase current sensing circuit parts	• Check compressor locking • Compressor wire open/short • Check compressor insulation damage • Check outdoor fan constraint / screened / flow structure • Check if IMP burned (refer to CH21) • Check on-PCB current sensing circuit parts

WARNING

Before checking PCB or each outdoor electric parts, wait for 3 minutes after the power is off. When measuring at standby state of power supply, after checking the measurement mode of the meter, be careful of the short-circuits with other parts.

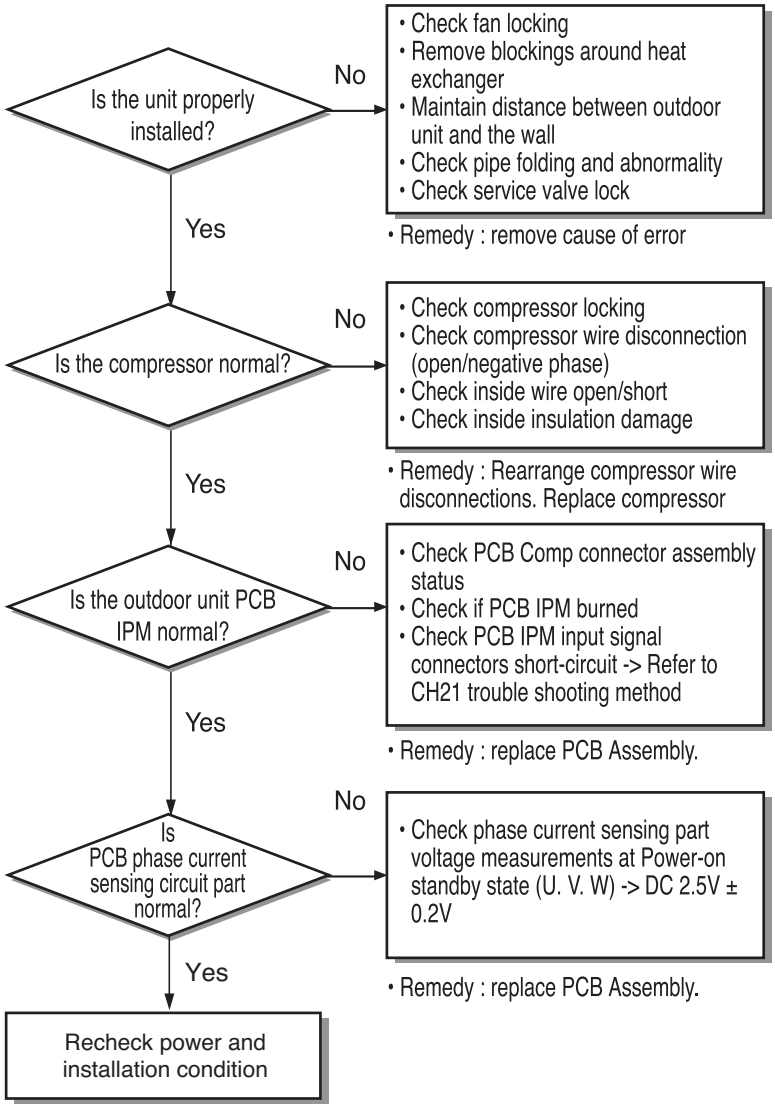

- **Inspecting PCB phase current sensing circuit**

1. Set Multi-tester as DC voltage measurement mode.
2. Measure the below measuring point DC voltages at Power-on standby state.
3. If the measurements are outside DC 2.5V ± 0.2V, the parts are decided as burned.

Copyright ©2013 LG Electronics. Inc. All right reserved.
Only for training and service purposes

LGE Internal Use Only

*** AUUQ18GH1 /AUUQ21GH1/ AUUQ24GH1**
(ATUQ18GPLE3/ ATUQ21GPLE3/ ATUQ24GNLE3)
(AVUQ18GJLA0/ AVUQ21GJLA0 / AVUQ24GJLA0)
(ABUQ18GHLA0/ ABUQ21GHLA0/ ABUQ24GGLA0)
(ABUQ18GL2A0/ ABUQ21GL2A0/ ABUQ24GL3A0)

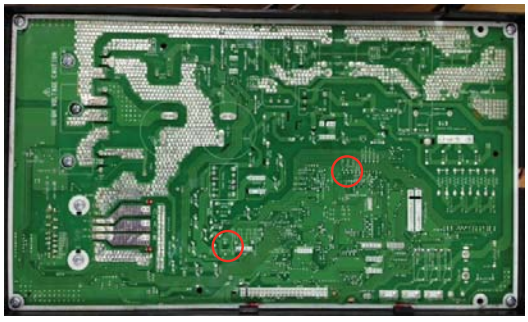

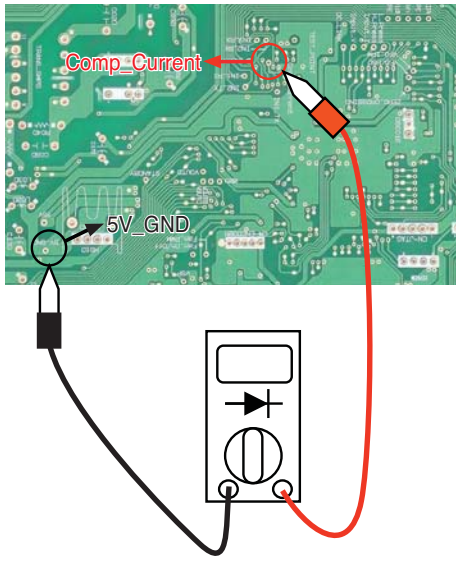

*** AUUQ36GH1 / ATNQ36GMLE3**
ABNQ36GGLA0 / AVNQ36GKLA0

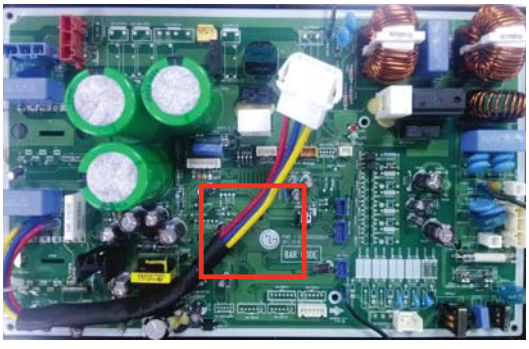

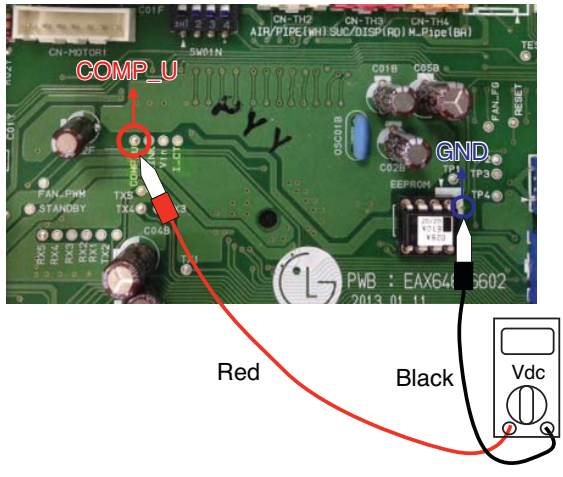

<CT Sensing Check Point>

Copyright ©2013 LG Electronics. Inc. All right reserved.
Only for training and service purposes

LGE Internal Use Only

▶ *** AUUQ42GH1/ AUUQ48GH1/ AUUQ54GH1**
(ATUQ42GMLE3/ ATUQ48GMLE3/ ATUQ54GMLE3)
(AVUQ42GLLA0/ AVUQ48GLLA0/ AVUQ54GLLA0)
(ABUQ42GRLA0/ ABUQ48GRLA0/ ABUQ54GRLA0)

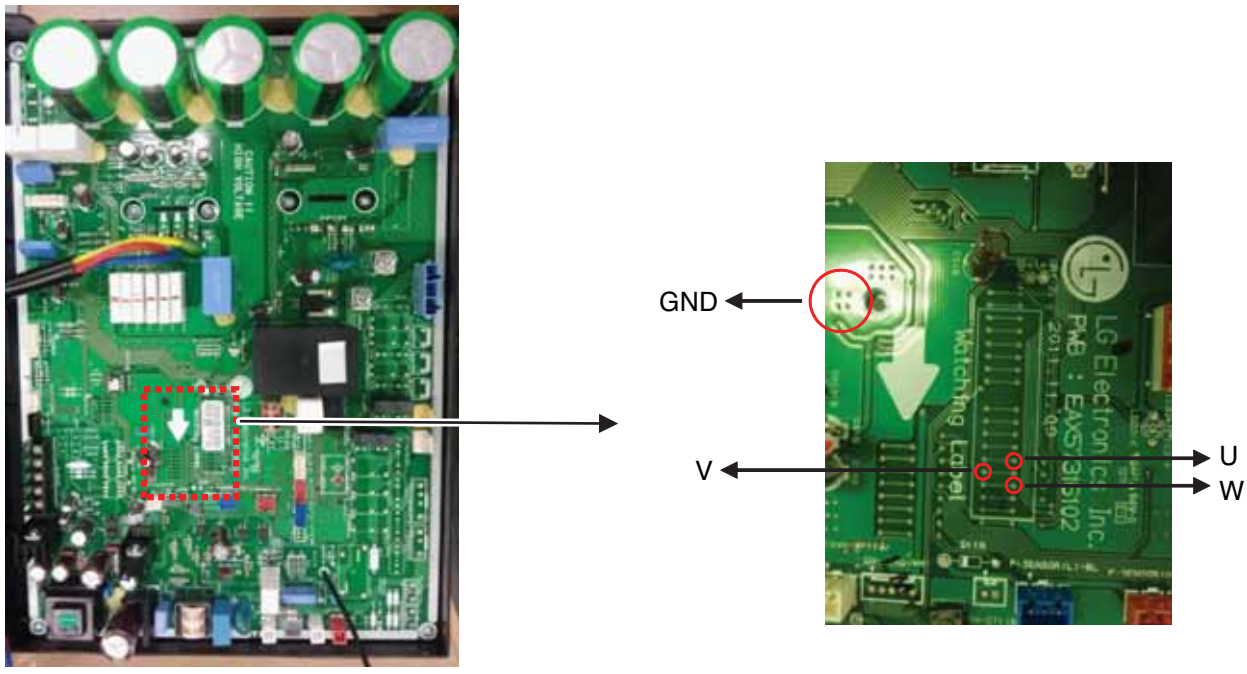

Copyright ©2013 LG Electronics. Inc. All right reserved.
Only for training and service purposes

LGE Internal Use Only

Display code	Title	Cause of error	Check point & Normal condition
27	AC Input Instant over Current Error	Inverter PCB input current is over100A(peak) for 2us	1. Overload operation (Pipe clogging/Covering/EEV defect/Ref. overcharge) 2. Compressor damage (Insulation damage/Motor damage) 3. Input voltage abnormal (L,N) 4. Power line assemble condition abnormal 5. Inverter PCB assembly Damage (input current sensing part)

WARNING

Before checking PCB or each outdoor electric parts, wait for 3 minutes after the power is off. When measuring at standby state of power supply, after checking the measurement mode of the meter, be careful of the short-circuits with other parts.

■ Error Diagnosis and Countermeasure Flow Chart

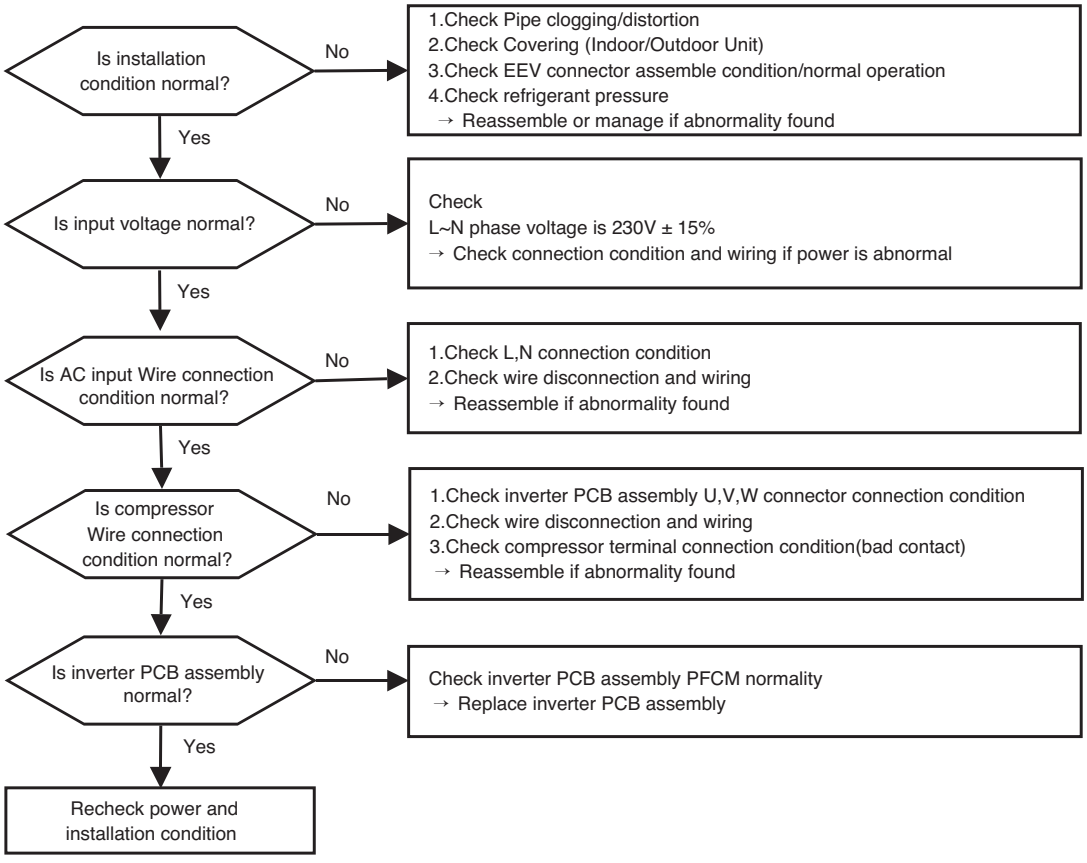

❊ PFCM Moudle checking method

① Set the multi tester to diode mode.

② Check short between input signal pin which are placed below PFC Module

③ Replace PCB assembly if it is short between pins except No.4,5 pins.

CAUTION

PFCM module No.4,5 pins are internal short state.

Copyright ©2013 LG Electronics. Inc. All right reserved.
Only for training and service purposes

LGE Internal Use Only

*** AUUQ18GH1 /AUUQ21GH1/ AUUQ24GH1**
(ATUQ18GPLE3/ ATUQ21GPLE3/ ATUQ24GNLE3)
(AVUQ18GJLA0/ AVUQ21GJLA0 / AVUQ24GJLA0)
(ABUQ18GHLA0/ ABUQ21GHLA0/ ABUQ24GGLA0)
(ABUQ18GL2A0/ ABUQ21GL2A0/ ABUQ24GL3A0)

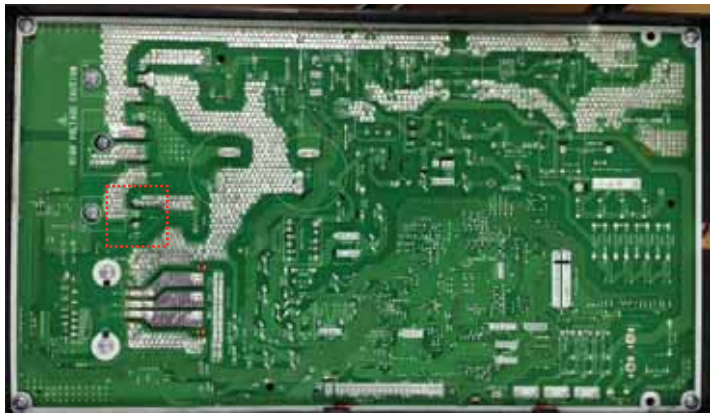

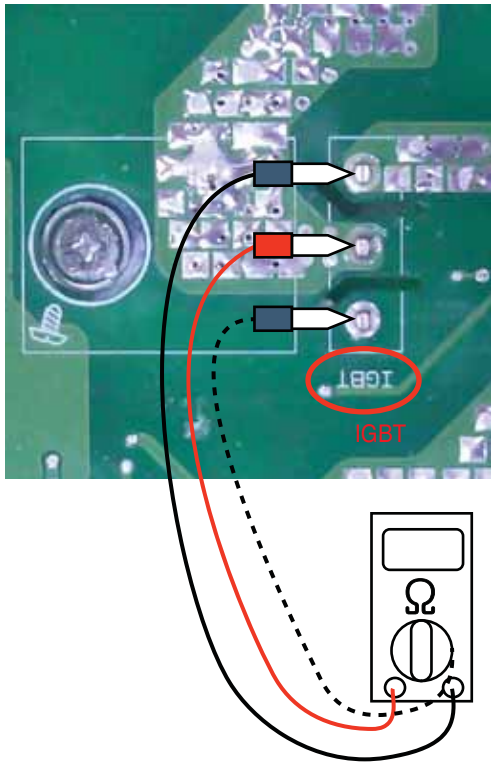

Copyright ©2013 LG Electronics. Inc. All right reserved.
Only for training and service purposes

LGE Internal Use Only

*** AUUQ36GH1 / ATNQ36GMLE3**
ABNQ36GGLA0 / AVNQ36GKLA0



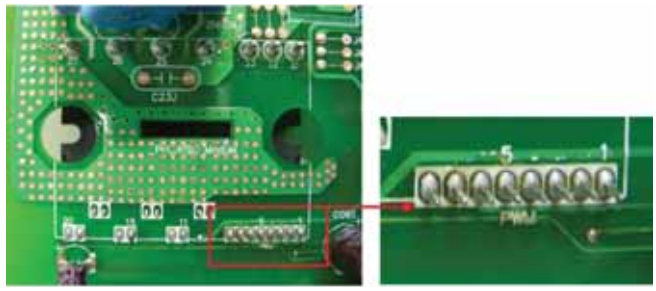

<Short Check Point>

*** AUUQ42GH1/ AUUQ48GH1/ AUUQ54GH1**
(ATUQ42GMLE3/ ATUQ48GMLE3/ ATUQ54GMLE3)
(AVUQ42GLLA0/ AVUQ48GLLA0/ AVUQ54GLLA0)
(ABUQ42GRLA0/ ABUQ48GRLA0/ ABUQ54GRLA0)



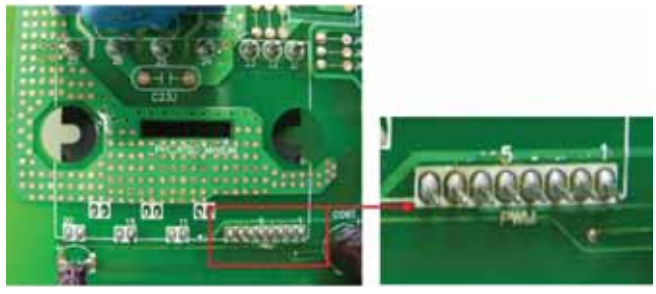

<Short Check Point>

Copyright ©2013 LG Electronics. Inc. All right reserved.
Only for training and service purposes

LGE Internal Use Only

Display code	Title	Cause of error	Check point & Normal condition
29	Over-current at the initial operation of the compressor / location sensing signal for compressor operation is not input	• Compressor Locking • Overload operation (Outdoor fan constraint, screened, blocked) • Burned parts inside PCB(IPM) • Burned PCB phase current sensing circuit parts	• Check compressor locking • Compressor wire open/short • Check compressor insulation damage • Check outdoor fan constraint / screened / flow structure • Check if IMP burned (refer to CH21) • Check on-PCB current sensing circuit parts

WARNING

Before checking PCB or each outdoor electric parts, wait for 3 minutes after the power is off. When measuring at standby state of power supply, after checking the measurement mode of the meter, be careful of the short-circuits with other parts.

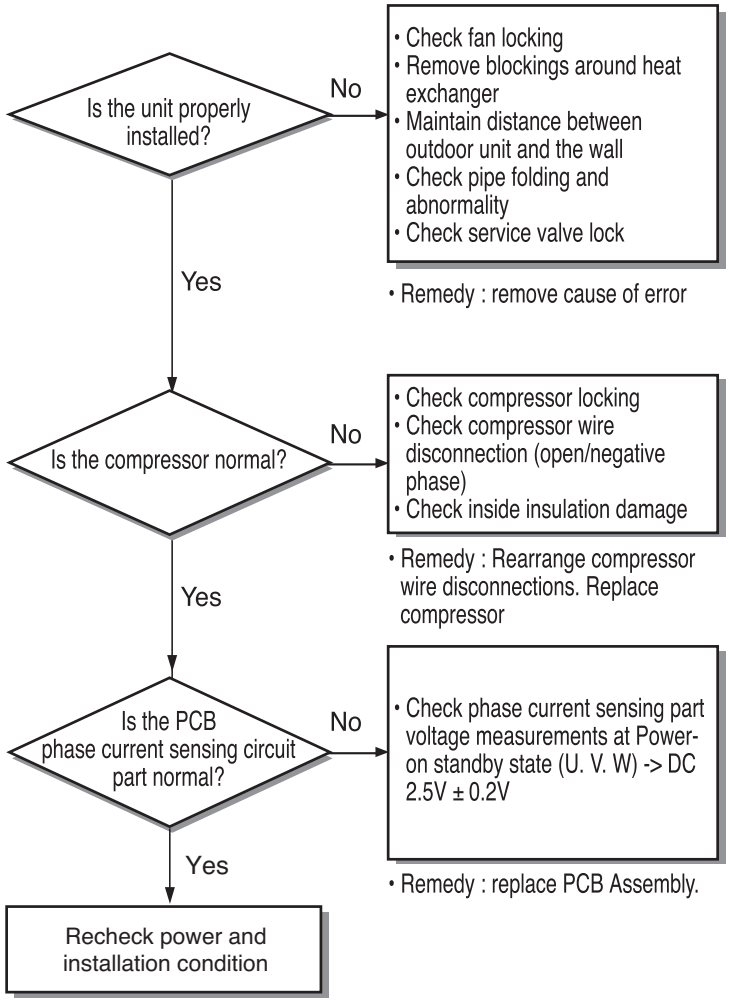

• Inspecting PCB phase current sensing circuit

1. Set Multi-tester as DC voltage measurement mode.
2. Measure at the below measuring point DC voltages at Power-on standby state.
3. If the measurements are outside DC 2.5V ± 0.2V, the parts are decided as burned.

Copyright ©2013 LG Electronics. Inc. All right reserved.
Only for training and service purposes

LGE Internal Use Only

Display code	Title	Cause of error	Check point & Normal condition
32	High temperature in Discharge pipe of the inverter compressor	• Overload operation (Outdoor fan constraint, screened, blocked) • Refrigerant leakage (insufficient) • Poor INV Comp Discharge sensor • LEV connector displaced / poor LEV assembly	• Check outdoor fan constraint/ screened/ flow structure • Check refrigerant leakage • Check if the sensor is normal • Check the status of EEV assembly

WARNING

Before checking PCB or each outdoor electric parts, wait for 3 minutes after the power is off. When measuring at standby state of power supply, after checking the measurement mode of the meter, be careful of the short-circuits with other parts.

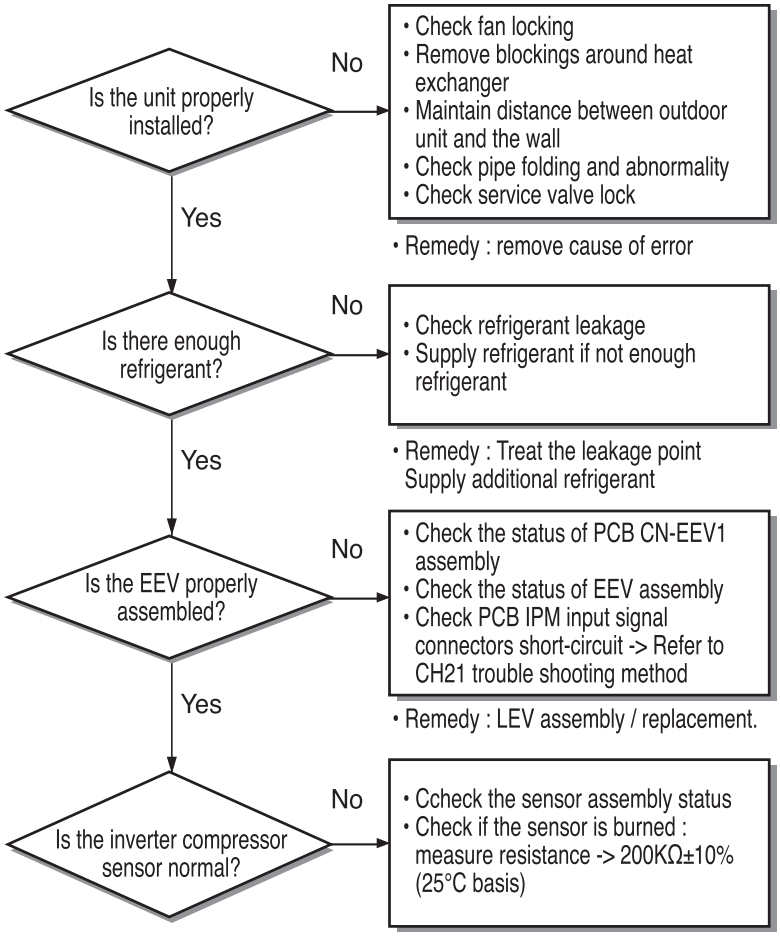

• Inspecting Inverter Compressor Discharge Sensor

1. Set Multi-tester as resistance measurement mode.
2. Measure the resistance between inverter discharge sensor connector pins.
3. Measure resistance value of 200KΩ±10%, 25°C basis
4. Check if the sensor insulation is damaged. -> measure the resistance between sensor connector pin and unit assembly pipe. (1MΩ or more)

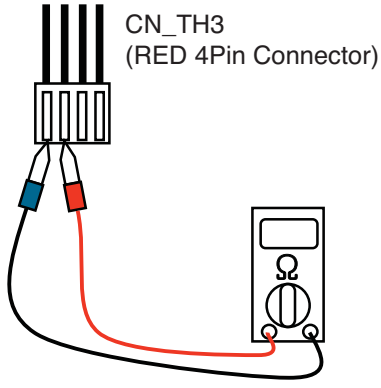

Copyright ©2013 LG Electronics. Inc. All right reserved.
Only for training and service purposes

LGE Internal Use Only

Display code	Title	Cause of error	Check point & Normal condition
35	Low Presser Error	Excessive decrease of low pressure	• Defective low pressure sensor • Defective outdoor/indoor unit fan • Refrigerant shortage/leakage • Deformation because of damage of refrigerant pipe • Defective indoor / outdoor unit EEV • Covering / clogging (outdoor unit covering during the cooling mode / indoor unit filter clogging during heating mode) • SVC valve clogging • Defective outdoor unit PCB • Defective indoor unit pipe sensor

■ Error diagnosis and countermeasure flow chart

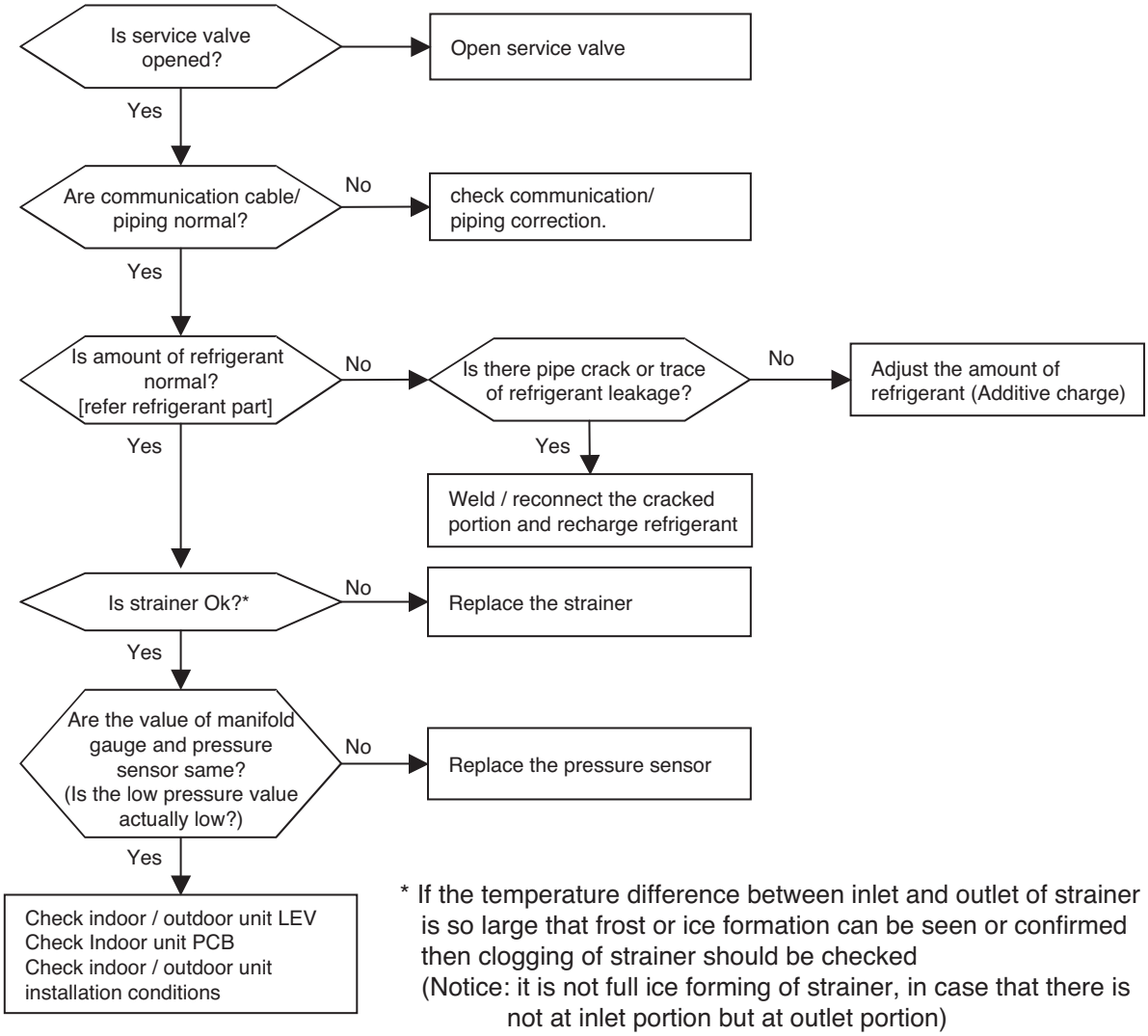

* If the temperature difference between inlet and outlet of strainer is so large that frost or ice formation can be seen or confirmed then clogging of strainer should be checked
(Notice: it is not full ice forming of strainer, in case that there is not at inlet portion but at outlet portion)

Copyright ©2013 LG Electronics. Inc. All right reserved.
Only for training and service purposes

LGE Internal Use Only

Display code	Title	Cause of error	Check point & Normal condition
39	Transmission Error Between (PFC Micom → INV Micom)	Communication Error Between PFC Micom and INV Micom.	1. Micom defect/Circuit defect 2. Different Micom S/W Version 3. ODU inverter PCB assembly damage

■ Error Diagnosis and Countermeasure Flow Chart

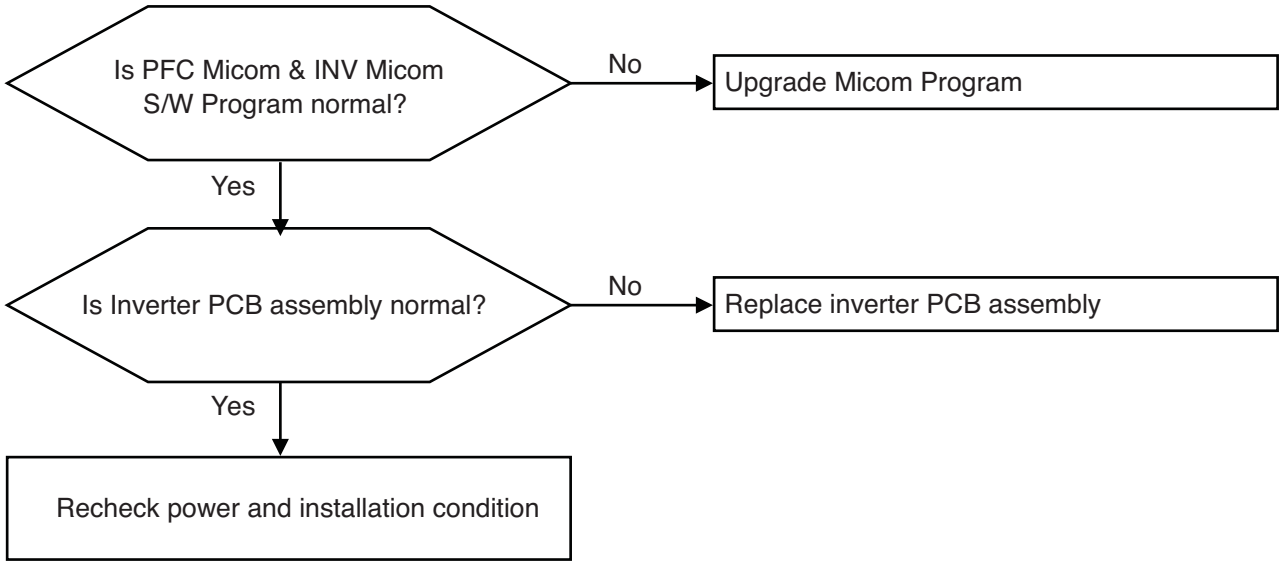

Copyright ©2013 LG Electronics. Inc. All right reserved.
Only for training and service purposes

LGE Internal Use Only

Display code	Title	Cause of error	Check point & Normal condition
40	C/T Sensor Error	• Initial current error	• Malfunction of current detection circuit. (Open / Short) • Check CT Sensor output voltage : 2.5Vdc ±5%

WARNING

Before checking PCB or each outdoor electric parts, wait for 3 minutes after the power is off. When measuring at standby state of power supply, after checking the measurement mode of the meter, be careful of the short-circuits with other parts.

■ Error Diagnosis and Countermeasure Flow Chart

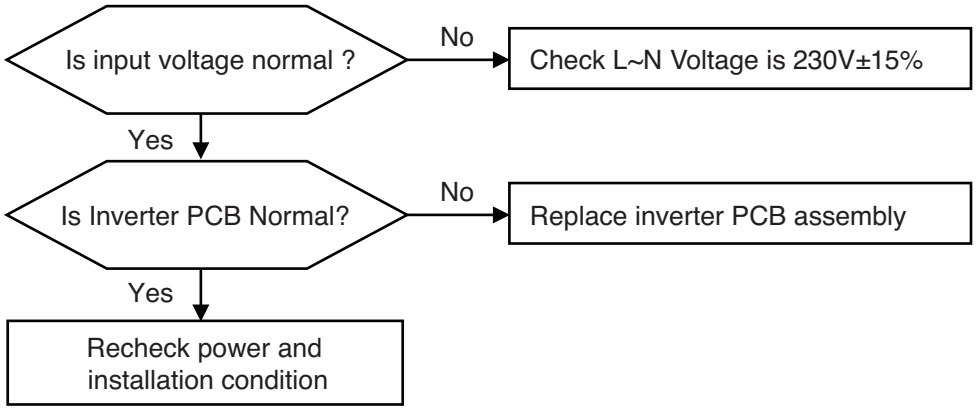

Check Point

1. Check the Input Voltage (L–N ➔ 230V±10%)
2. Check Input Voltage Sensor output voltage (2.5Vdc±10%)

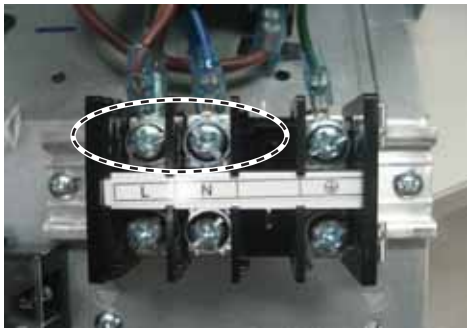

< Input Power Source Check Point >

Copyright ©2013 LG Electronics. Inc. All right reserved.
Only for training and service purposes

LGE Internal Use Only

*** AUUQ18GH1 /AUUQ21GH1/ AUUQ24GH1**
(ATUQ18GPLE3/ ATUQ21GPLE3/ ATUQ24GNLE3)
(AVUQ18GJLA0/ AVUQ21GJLA0 / AVUQ24GJLA0)
(ABUQ18GHLA0/ ABUQ21GHLA0/ ABUQ24GGLA0)
(ABUQ18GL2A0/ ABUQ21GL2A0/ ABUQ24GL3A0)

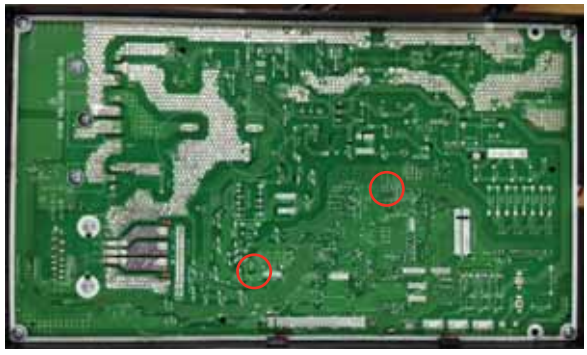

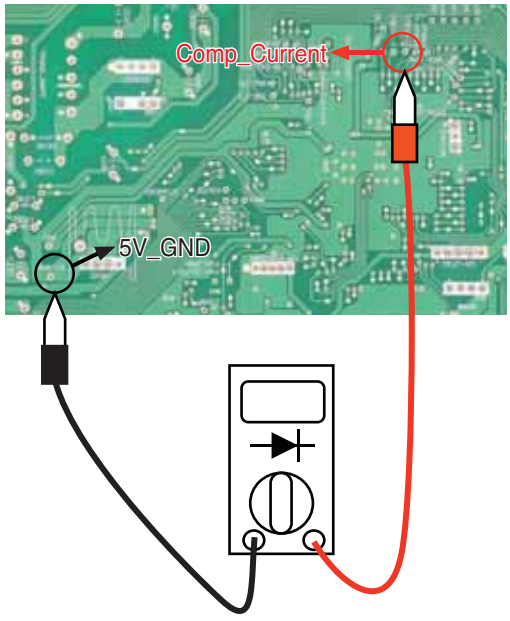

Copyright ©2013 LG Electronics. Inc. All right reserved.
Only for training and service purposes

LGE Internal Use Only

▶ * AUUQ36GH1 / ATNQ36GMLE3
ABNQ36GGLA0 / AVNQ36GKLA0

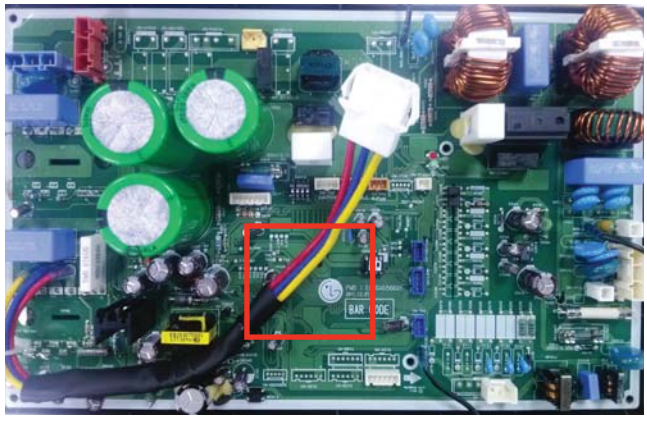

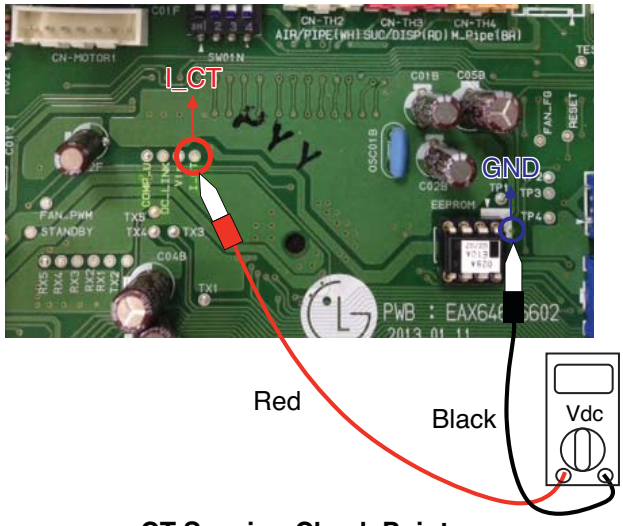

<CT Sensing Check Point>

▶ * AUUQ42GH1/ AUUQ48GH1/ AUUQ54GH1
(ATUQ42GMLE3/ ATUQ48GMLE3/ ATUQ54GMLE3)
(AVUQ42GLLA0/ AVUQ48GLLA0/ AVUQ54GLLA0)
(ABUQ42GRLA0/ ABUQ48GRLA0/ ABUQ54GRLA0)

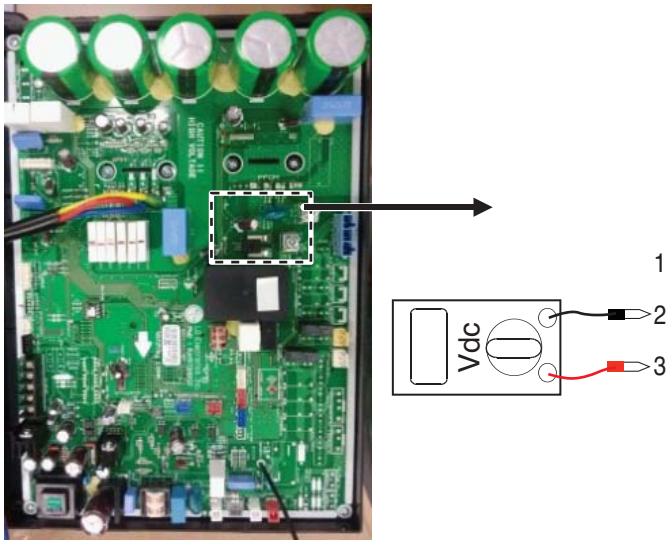

< Inverter PCB>

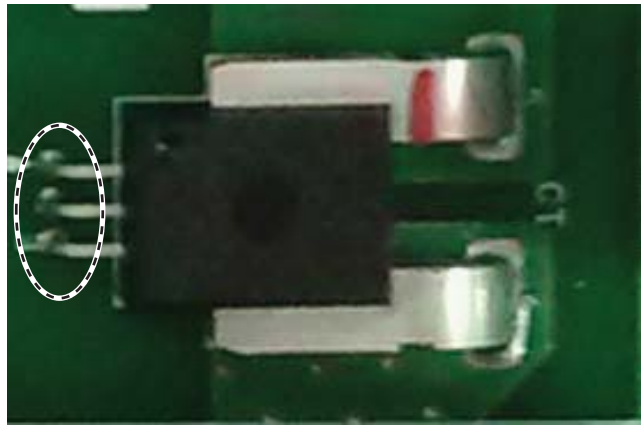

<CT Sensing Check Point>

Copyright ©2013 LG Electronics. Inc. All right reserved.
Only for training and service purposes

LGE Internal Use Only

Display code	Title	Cause of error	Check point & Normal condition
41	D-pipe sensor (Inverter)	• Open / Short • Soldered poorly • Internal circuit error	1. Bad connection of thermistor connector 2. Defect of thermistor connector (Open/Short) 3. Defect of outdoor PCB
44	Air sensor	• Open / Short • Soldered poorly • Internal circuit error	1. Bad connection of thermistor connector 2. Defect of thermistor connector (Open/Short) 3. Defect of outdoor PCB
45	Condenser Mid-pipesen-sor	• Open / Short • Soldered poorly • Internal circuit error	1. Bad connection of thermistor connector 2. Defect of thermistor connector (Open/Short) 3. Defect of outdoor PCB

■ Error Diagnosis and Countermeasure Flow Chart

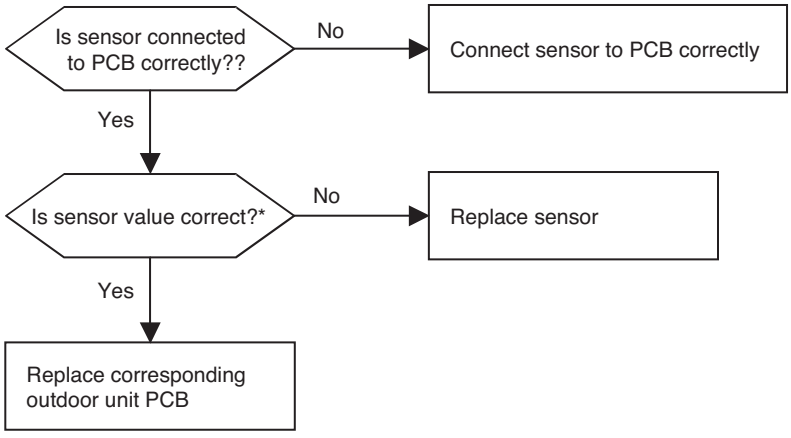

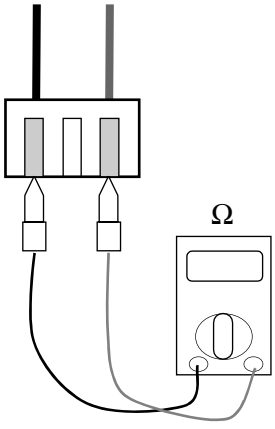

Check Point

1. Estimate the resistance of each sensor.(Unplugged)
2. Check the value of the resistor of thermistor.
   - D-pipe sensor (Inverter) : Normal Value of the resistor is 200kΩ at 25°C
   - Air sensor : Normal Value of the resistor is 10kΩ at 25°C
   - Cond. Mid-pipe sensor : Normal Value of the resistor is 5kΩ at 25°C
   - Suction pipe sensor : Normal Value of the resistor is 5kΩ at 25°C
   - Condenser Out-pipe sensor : Normal Value of the resistor is 5kΩ at 25°C

Copyright ©2013 LG Electronics. Inc. All right reserved.
Only for training and service purposes

LGE Internal Use Only

Display code	Title	Cause of error	Check point & Normal condition
43	Sensor error of high pressure	Abnormal value of sensor (Open/Short)	• Bad connection of connector PCB • Bad connection high pressure connector • Defect of high pressure connector (Open/Short) • Defect of connector PCB (Open/Short) • Defect of outdoor main PCB.

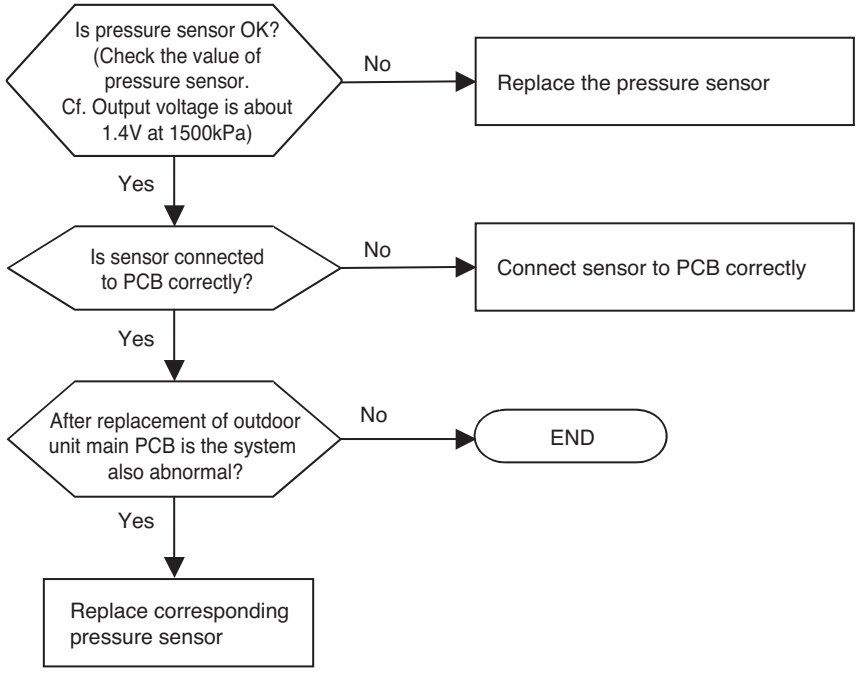

Display code	Title	Cause of error	Check point & Normal condition
51	Over capacity	• Over capacity Combination	• Check the indoor unit capacity. • Check the combination table.

Copyright ©2013 LG Electronics. Inc. All right reserved.
Only for training and service purposes

LGE Internal Use Only

Display code	Title	Cause of error	Check point & Normal condition
53	Title Communication (Indoor → Outdoor)	• Communication poorly	• Power input AC 230V. (Outdoor, Indoor) • The connector for transmission is disconnected. • The connecting wires are misconnected. • The communication line is shorted at GND. • Transmission circuit of outdoor PCB is abnormal. • Transmission circuit of indoor PCB is abnormal.

WARNING

Before checking PCB or each outdoor electric parts, wait for 3 minutes after the power is off. When measuring at standby state of power supply, after checking the measurement mode of the meter, be careful of the short-circuits with other parts.

Check Point

1. Check the input power AC230V. (Outdoor, Indoor unit)
2. Check the communication wires are correctly connected.
   Adjust the connection of wire Confirm the wire of "Live", "Neutral"
3. Check the resistance between communication line and GND. (Normal : Over 2MΩ)
4. Check the connector for communication is correctly connected.
5. If one indoor unit is operated normally, outdoor PCB is no problem.
   Check the another indoor unit.
   * CH05 is displayed at indoor unit, CH53 is displayed at outdoor unit.
6. If all indoor unit is displayed CH05 but outdoor PCB not display
   CH53 : Check the CN_COM and CN_POWER is correctly connected.

Copyright ©2013 LG Electronics. Inc. All right reserved.
Only for training and service purposes

LGE Internal Use Only

Display code	Title	Cause of error	Check point & Normal condition
60	Inverter PCB & Main EEPROM check sum error	EEPROM Access error and Check SUM error	1. EEPROM contact defect/wrong insertion 2. Different EEPROM Version 3. ODU Inverter & Main PCB assembly damage

WARNING

Before checking PCB or each outdoor electric parts, wait for 3 minutes after the power is off. When measuring at standby state of power supply, after checking the measurement mode of the meter, be careful of the short-circuits with other parts.

■ Error Diagnosis and Countermeasure Flow Chart

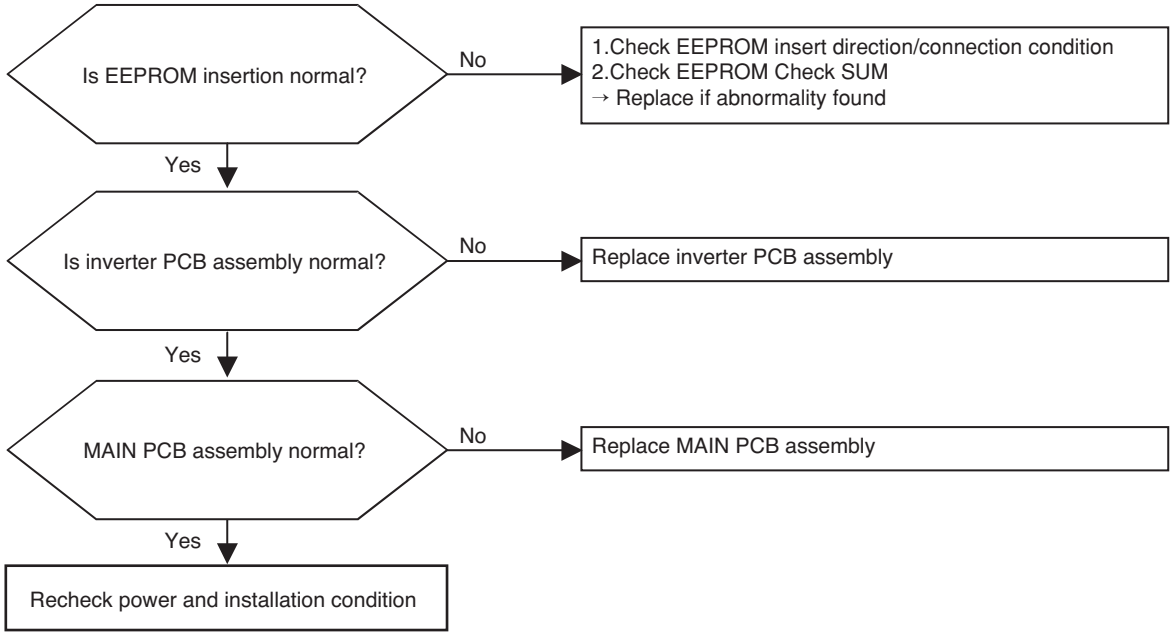

Check Point

- Check the EEPROM Check sum & Direction

* AUUQ18GH1 /AUUQ21GH1/ AUUQ24GH1
  (ATUQ18GPLE3/ ATUQ21GPLE3/ ATUQ24GNLE3)
  (AVUQ18GJLA0/ AVUQ21GJLA0 / AVUQ24GJLA0)
  (ABUQ18GHLA0/ ABUQ21GHLA0/ ABUQ24GGLA0)
  (ABUQ18GL2A0/ ABUQ21GL2A0/ ABUQ24GL3A0)

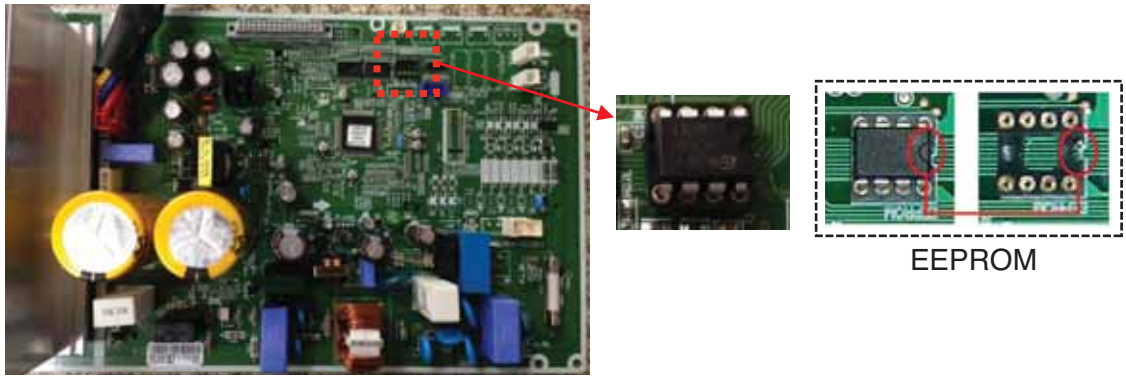
EEPROM

Copyright ©2013 LG Electronics. Inc. All right reserved.
Only for training and service purposes

LGE Internal Use Only

*** AUUQ36GH1 / ATNQ36GMLE3**
ABNQ36GGLA0 / AVNQ36GKLA0

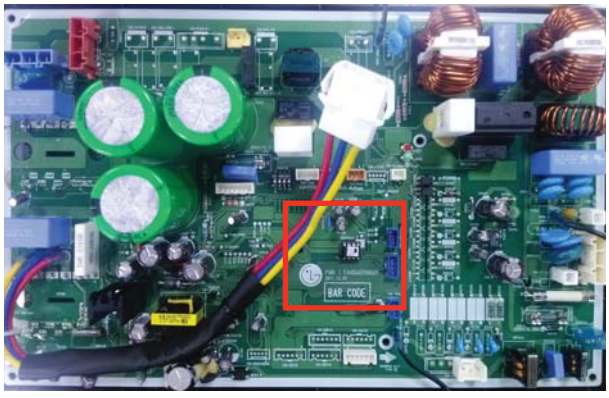

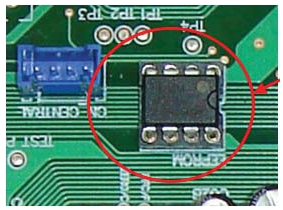

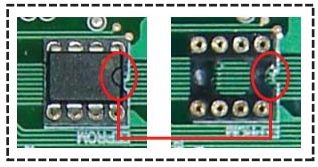

EEPROM

*** AUUQ42GH1/ AUUQ48GH1/ AUUQ54GH1**
(ATUQ42GMLE3/ ATUQ48GMLE3/ ATUQ54GMLE3)
(AVUQ42GLLA0/ AVUQ48GLLA0/ AVUQ54GLLA0)
(ABUQ42GRLA0/ ABUQ48GRLA0/ ABUQ54GRLA0)

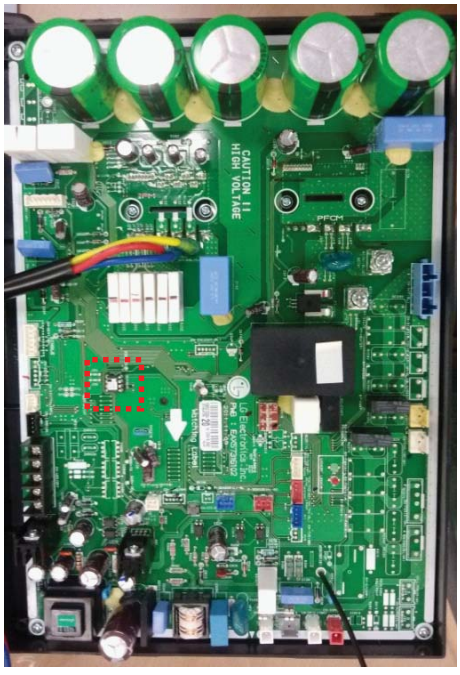

EEPROM

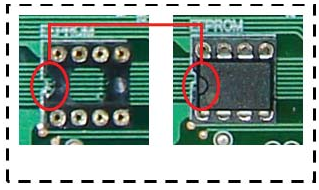

Copyright ©2013 LG Electronics. Inc. All right reserved.
Only for training and service purposes

LGE Internal Use Only

Display code	Title	Cause of error	Check point & Normal condition
61	High temperature in outdoor Cond. Pipe	• Overload operation (Outdoor fan constraint, screened, blocked) • Outdoor unit heat exchanger contaminated • EEV connector displaced / poor EEV assembly • Poor Cond. Pipe sensor assembly / burned	• Check outdoor fan constraint / screened / flow structure • Check if refrigerant overcharged • Check the status of EEV assembly • Check the status of sensor assembly / burn

WARNING

Before checking PCB or each outdoor electric parts, wait for 3 minutes after the power is off. When measuring at standby state of power supply, after checking the measurement mode of the meter, be careful of the short-circuits with other parts.

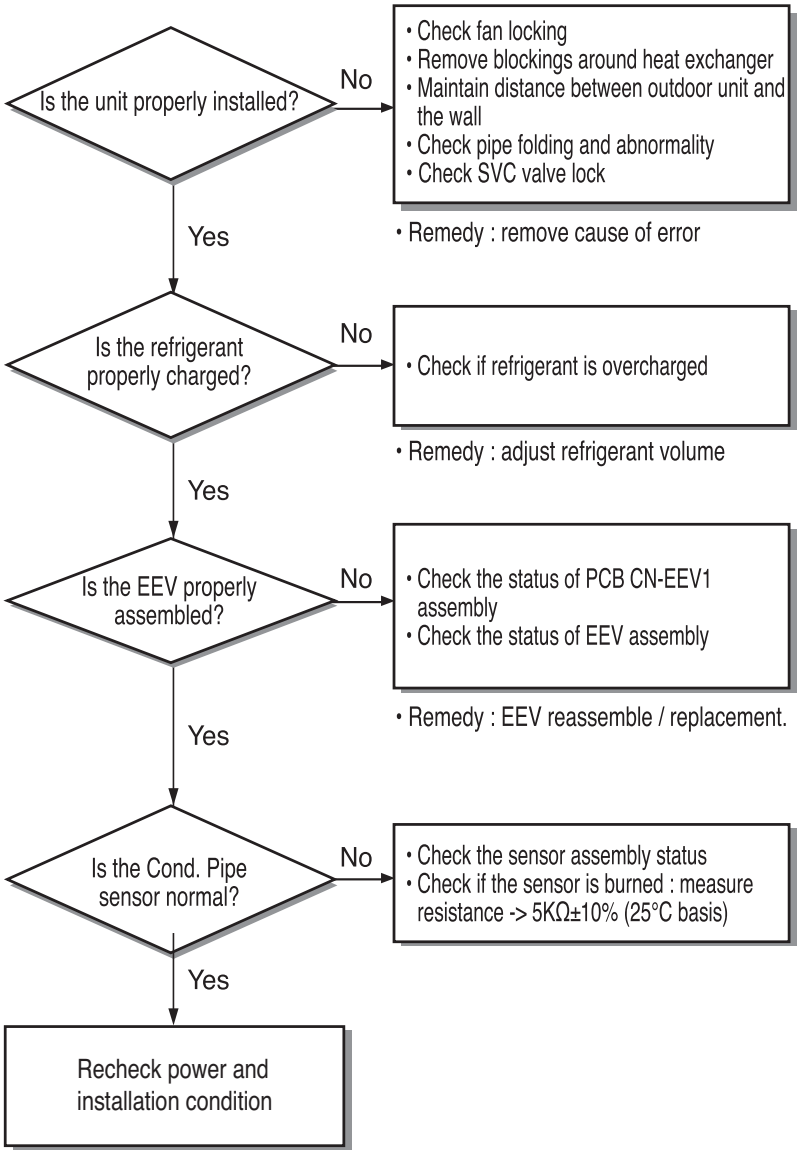

• Inspecting Cond. Pipe Sensor

1. Set Multi-tester as resistance measurement mode.
2. Measure the resistance between rated speed Comp Discharge sensor connector pins.
3. Measure resistance value of 5kΩ±10%, 25°C basis
4. Check if the sensor insulation is damaged. -> measure the resistance between sensor connector pin and unit assembly pipe. (1MΩ or more)

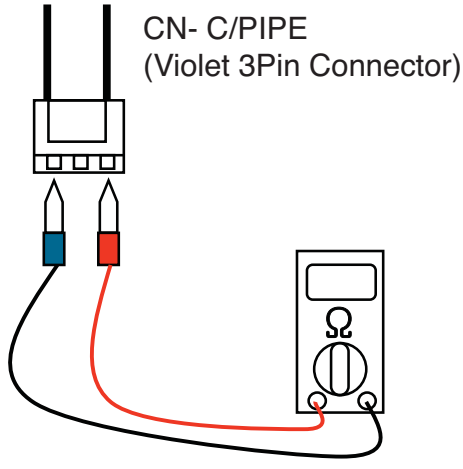

Copyright ©2013 LG Electronics. Inc. All right reserved.
Only for training and service purposes

Display code	Title	Cause of error	Check point & Normal condition
62	Heatsink High error	Inverter PCB heatsink temperature is over 85°C	1. ODU fan locking 2. Heatsink assembly of INV PCB assemble condition abnormal 3. Defect of temperature sensing circuit part defect of INV PCB

■ Error Diagnosis and Countermeasure Flow Chart

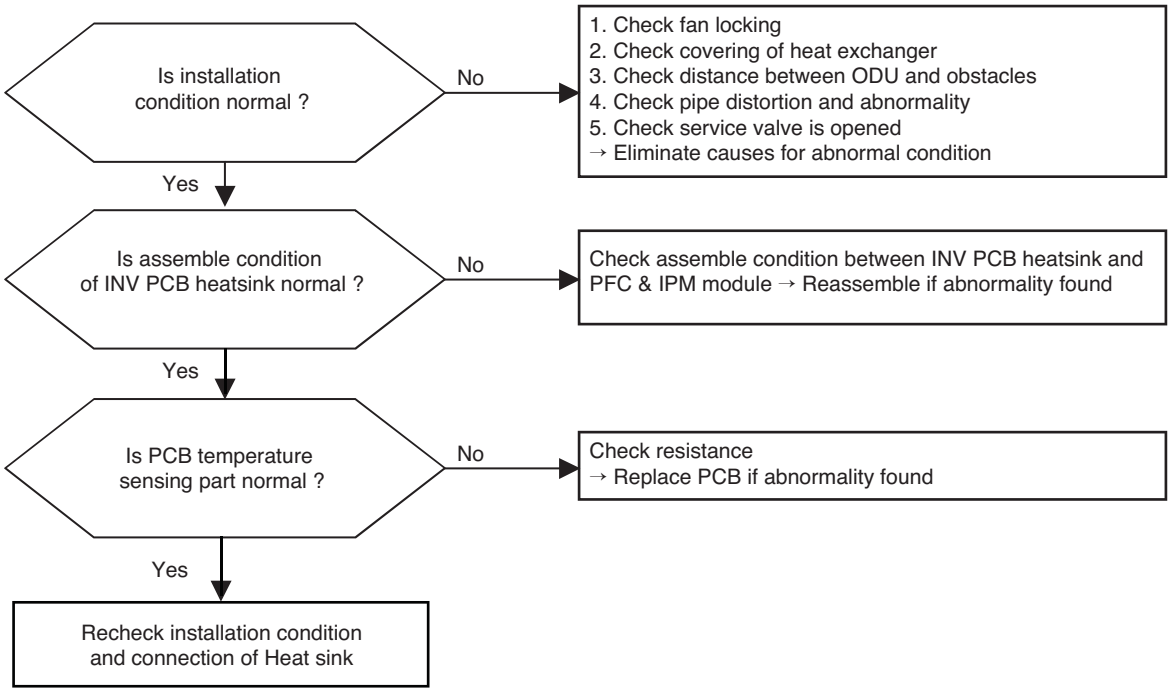

Model	check point	Normal resistance
AUUQ18GH1 /AUUQ21GH1/ AUUQ24GH1 (ATUQ18GPLE3/ ATUQ21GPLE3/ ATUQ24GNLE3) (AVUQ18GJLA0/ AVUQ21GJLA0 / AVUQ24GJLA0) (ABUQ18GHLA0/ ABUQ21GHLA0/ ABUQ24GGLA0) (ABUQ18GL2A0/ ABUQ21GL2A0/ ABUQ24GL3A0)	NO.14 pin and NO.16 pin of IPM module	85kΩ ± 6.3% (25°C)
AUUQ36GH1 (ATUQ36GMLE3) (AVUQ36GKLA0) (ABUQ36GGLA0)	NO.19 pin and NO.20 pin of PCB PFC module	50kΩ ±10% (25°C)
AUUQ42GH1/ AUUQ48GH1/ AUUQ54GH1 (ATUQ42GMLE3/ ATUQ48GMLE3/ ATUQ54GMLE3) (AVUQ42GLLA0/ AVUQ48GLLA0/ AVUQ54GLLA0) (ABUQ42GRLA0/ ABUQ48GRLA0/ ABUQ54GRLA0)		

Copyright ©2013 LG Electronics. Inc. All right reserved.
Only for training and service purposes

LGE Internal Use Only

*** AUUQ18GH1 /AUUQ21GH1/ AUUQ24GH1**
(ATUQ18GPLE3/ ATUQ21GPLE3/ ATUQ24GNLE3)
(AVUQ18GJLA0/ AVUQ21GJLA0 / AVUQ24GJLA0)
(ABUQ18GHLA0/ ABUQ21GHLA0/ ABUQ24GGLA0)
(ABUQ18GL2A0/ ABUQ21GL2A0/ ABUQ24GL3A0)

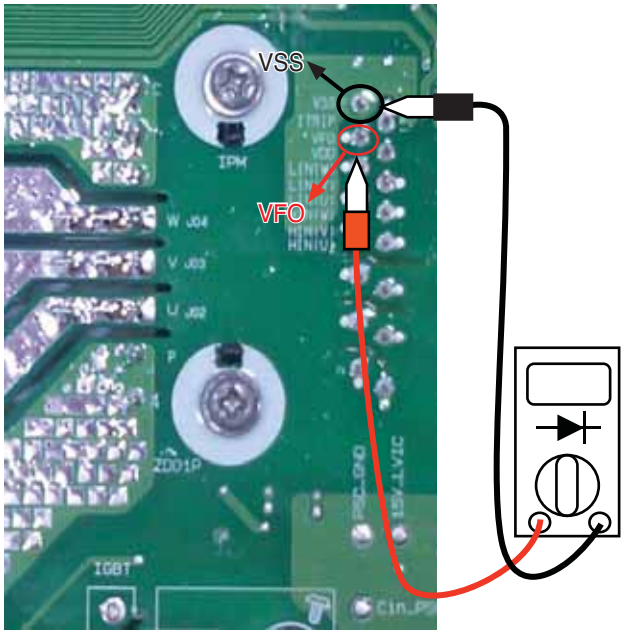

Copyright ©2013 LG Electronics. Inc. All right reserved.
Only for training and service purposes

LGE Internal Use Only

*** AUUQ36GH1 / ATNQ36GMLE3**
ABNQ36GGLA0 / AVNQ36GKLA0



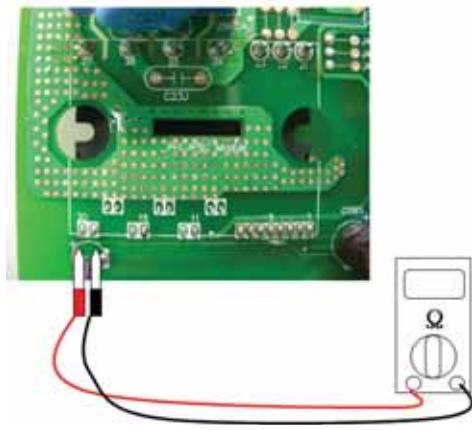

PFCM:
Measuring resistance
between No.19,20 pin

*** AUUQ42GH1/ AUUQ48GH1/ AUUQ54GH1**
(ATUQ42GMLE3/ ATUQ48GMLE3/ ATUQ54GMLE3)
(AVUQ42GLLA0/ AVUQ48GLLA0/ AVUQ54GLLA0)
(ABUQ42GRLA0/ ABUQ48GRLA0/ ABUQ54GRLA0)



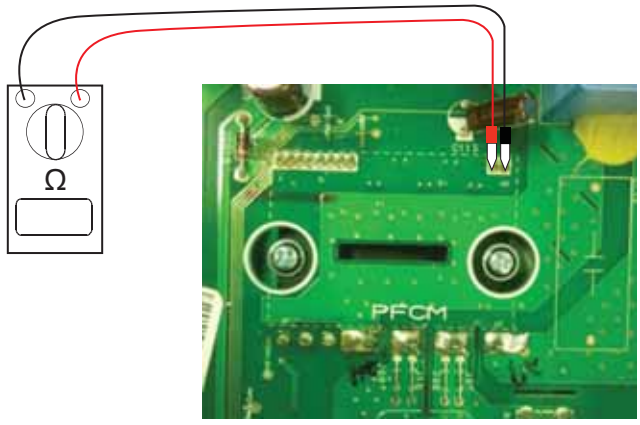

Copyright ©2013 LG Electronics. Inc. All right reserved.
Only for training and service purposes

Display code	Title	Cause of error	Check point & Normal condition
65	Heatsink Sensor error	Inverter PCB heatsink sensor is open or short	1. ODU fan locking 2. Heatsink assembly of INV PCB assemble condition abnormal 3. Defect of temperature sensing circuit part defect of INV PCB

■ Error Diagnosis and Countermeasure Flow Chart

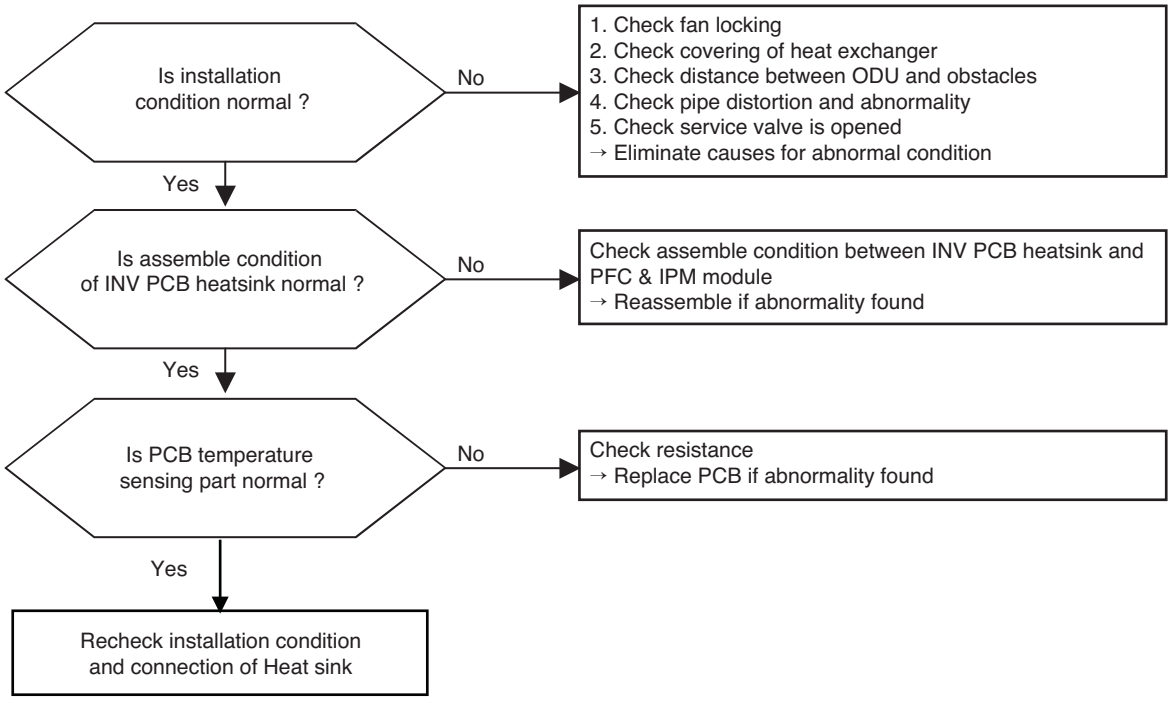

Model	check point	Normal resistance
AUUQ18GH1 /AUUQ21GH1/ AUUQ24GH1 (ATUQ18GPLE3/ ATUQ21GPLE3/ ATUQ24GNLE3) (AVUQ18GJLA0/ AVUQ21GJLA0 / AVUQ24GJLA0) (ABUQ18GHLA0/ ABUQ21GHLA0/ ABUQ24GGLA0) (ABUQ18GL2A0/ ABUQ21GL2A0/ ABUQ24GL3A0)	NO.14 pin and NO.16 pin of IPM module	85kΩ ± 6.3% (25°C)
AUUQ36GH1 (ATUQ36GMLE3) (AVUQ36GKLA0) (ABUQ36GGLA0)	NO.19 pin and NO.20 pin of PCB PFC module	50kΩ ±10% (25°C)
AUUQ42GH1/ AUUQ48GH1/ AUUQ54GH1 (ATUQ42GMLE3/ ATUQ48GMLE3/ ATUQ54GMLE3) (AVUQ42GLLA0/ AVUQ48GLLA0/ AVUQ54GLLA0) (ABUQ42GRLA0/ ABUQ48GRLA0/ ABUQ54GRLA0)		

Copyright ©2013 LG Electronics. Inc. All right reserved.
Only for training and service purposes

LGE Internal Use Only

*** AUUQ18GH1 /AUUQ21GH1/ AUUQ24GH1**
(ATUQ18GPLE3/ ATUQ21GPLE3/ ATUQ24GNLE3)
(AVUQ18GJLA0/ AVUQ21GJLA0 / AVUQ24GJLA0)
(ABUQ18GHLA0/ ABUQ21GHLA0/ ABUQ24GGLA0)
(ABUQ18GL2A0/ ABUQ21GL2A0/ ABUQ24GL3A0)

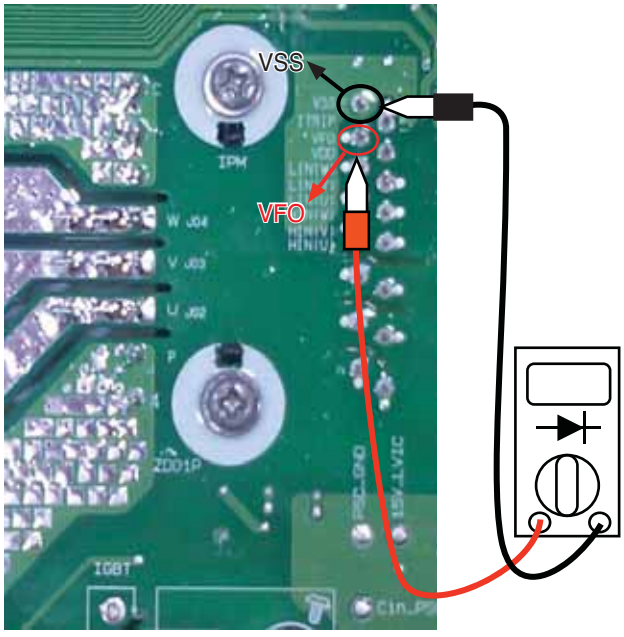

Copyright ©2013 LG Electronics. Inc. All right reserved.
Only for training and service purposes

LGE Internal Use Only

*** AUUQ36GH1 / ATNQ36GMLE3**
ABNQ36GGLA0 / AVNQ36GKLA0



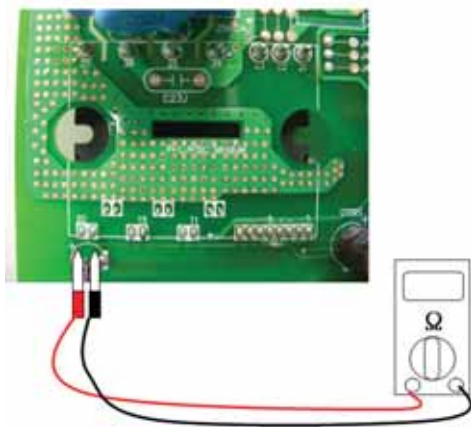

PFCM:
Measuring resistance
between No.19,20 pin

*** AUUQ42GH1/ AUUQ48GH1/ AUUQ54GH1**
(ATUQ42GMLE3/ ATUQ48GMLE3/ ATUQ54GMLE3)
(AVUQ42GLLA0/ AVUQ48GLLA0/ AVUQ54GLLA0)
(ABUQ42GRLA0/ ABUQ48GRLA0/ ABUQ54GRLA0)



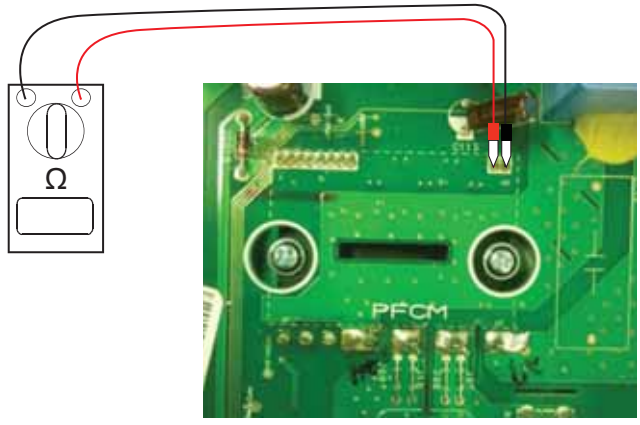

Copyright ©2013 LG Electronics. Inc. All right reserved.
Only for training and service purposes

LGE Internal Use Only

Display code	Title	Cause of error	Check point & Normal condition
67	Fan Lock Error	Fan RPM is 10RPM or less for 5 sec. when ODU fan starts or 40 RPM or less after fan starting.	1. ODU fan locking 2. Heatsink assembly of INV PCB assemble condition abnormal 3. Defect of temperature sensing circuit part defect of INV PCB

■ Error Diagnosis and Countermeasure Flow Chart

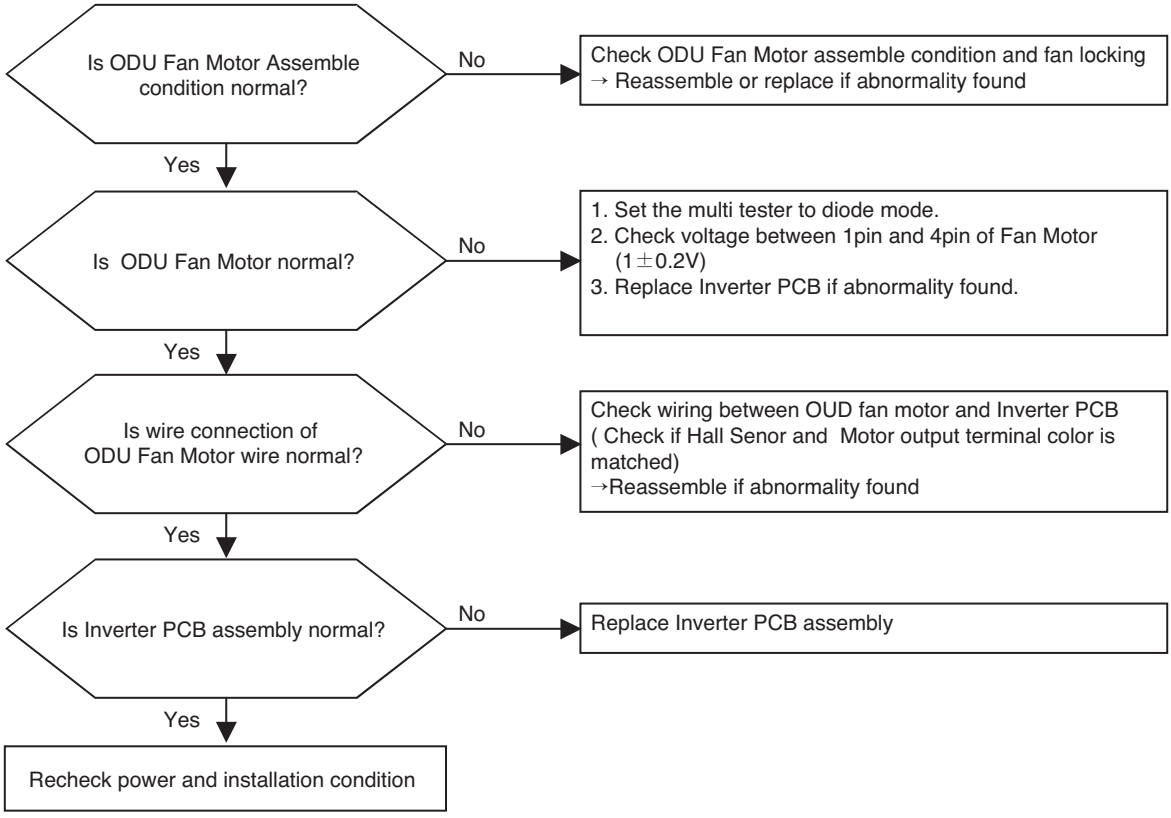

Check Point

1. Check voltage between 1pin and 4pin of Fan Mortor connector (Tester diode mode)
2. Voltage value should be in 1V ±0.2V.
3. Do not replacing all of fan motor and PCB at once.
   Check error code again, after replacing the abnormal part (Fan Motor or PCB) first.

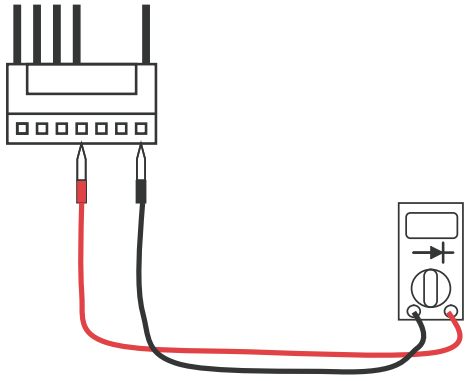

Copyright ©2013 LG Electronics. Inc. All right reserved.
Only for training and service purposes

LGE Internal Use Only

▶ AUUQ18GH1 /AUUQ21GH1/ AUUQ24GH1
(ATUQ18GPLE3/ ATUQ21GPLE3/ ATUQ24GNLE3)
(AVUQ18GJLA0/ AVUQ21GJLA0 / AVUQ24GJLA0)
(ABUQ18GHLA0/ ABUQ21GHLA0/ ABUQ24GGLA0)
(ABUQ18GL2A0/ ABUQ21GL2A0/ ABUQ24GL3A0)

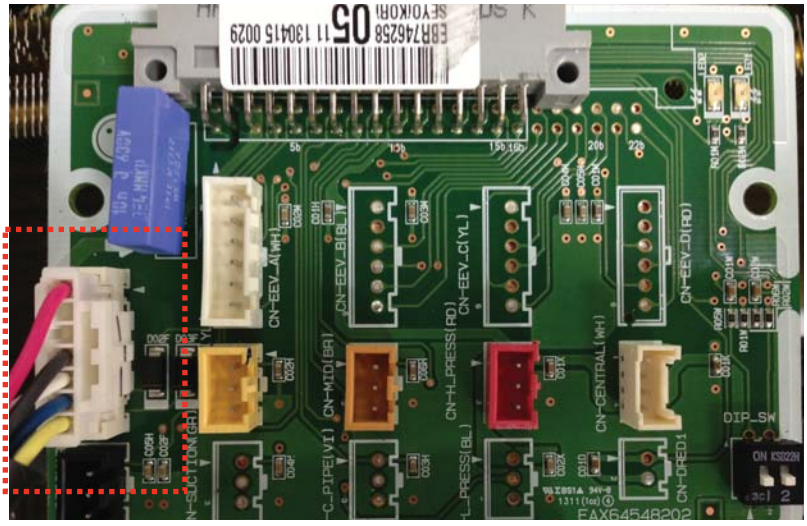

Check voltage betwen
1pin and 4pin of fan motor

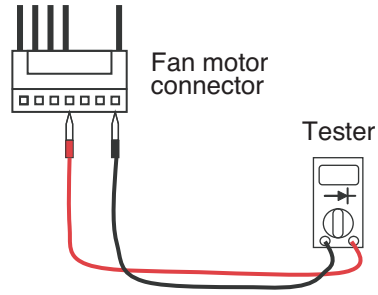

Copyright ©2013 LG Electronics. Inc. All right reserved.
Only for training and service purposes

LGE Internal Use Only

▶ AUUQ36GH1 / ATNQ36GMLE3
ABNQ36GGLA0 / AVNQ36GKLA0



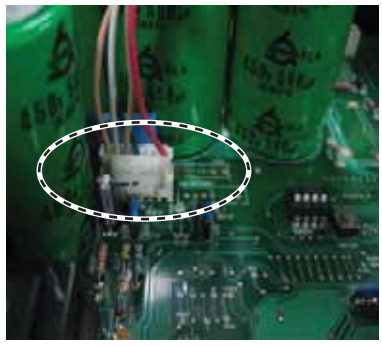

<Main PCB>

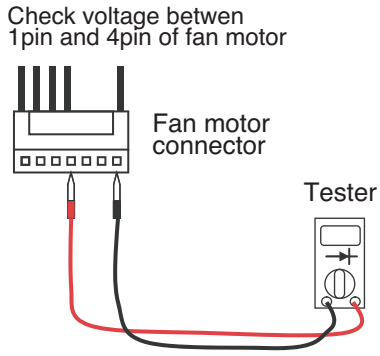

▶ AUUQ42GH1/ AUUQ48GH1/ AUUQ54GH1
(ATUQ42GMLE3/ ATUQ48GMLE3/ ATUQ54GMLE3)
(AVUQ42GLLA0/ AVUQ48GLLA0/ AVUQ54GLLA0)
(ABUQ42GRLA0/ ABUQ48GRLA0/ ABUQ54GRLA0)





Copyright ©2013 LG Electronics. Inc. All right reserved.
Only for training and service purposes

LGE Internal Use Only

Display code	Title	Cause of error	Check point & Normal condition
73	AC input instant over current error (Matter of software)	Inverter PCB input power current is over 48A(peak) for 2ms	1. Overload operation (Pipe clogging/Covering/EEV defect/Ref.overcharge) 2. Compressor damage (Insulation damage/Motor damage) 3. Input voltage abnormal (L, N) 4. Power line assemble condition abnormal 5. Inverter PCB assembly damage (input current sensing part)

■ Error Diagnosis and Countermeasure Flow Chart

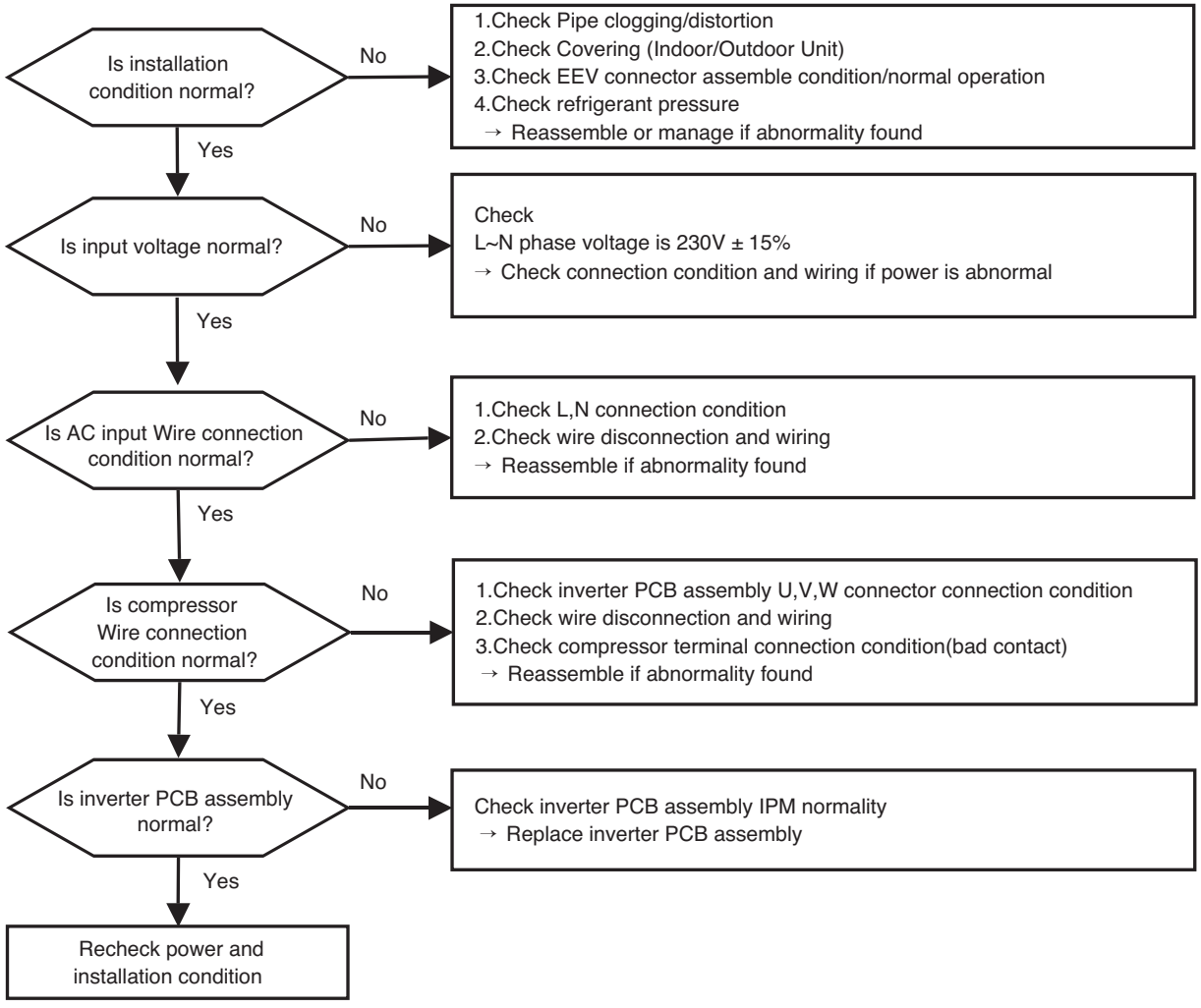

Copyright ©2013 LG Electronics. Inc. All right reserved.
Only for training and service purposes

LGE Internal Use Only

* AUUQ36GH1 / ATNQ36GMLE3
  ABNQ36GGLA0 / AVNQ36GKLA0

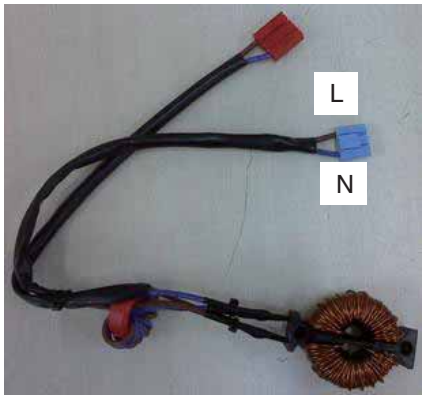

< Noise Filter wiring Check Point >

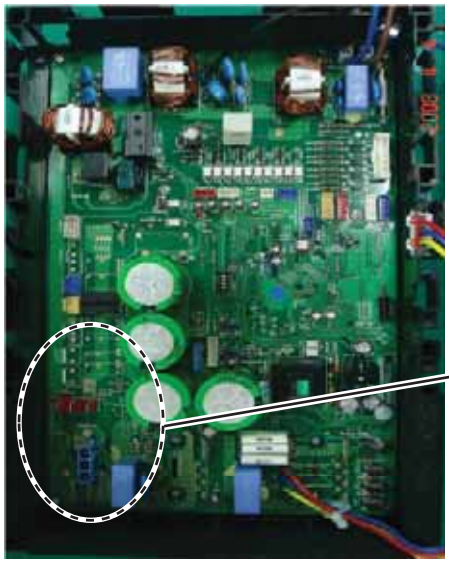



< Main PCB wiring Check Point >

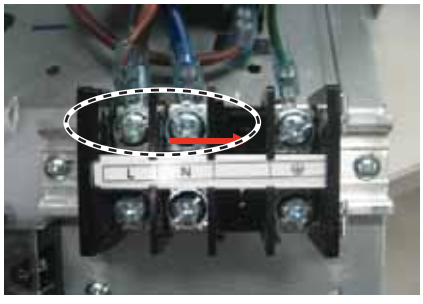

< Input Power Source Check Point >

Copyright ©2013 LG Electronics. Inc. All right reserved.
Only for training and service purposes

LGE Internal Use Only

▸ AUUQ42GH1/ AUUQ48GH1/ AUUQ54GH1
(ATUQ42GMLE3/ ATUQ48GMLE3/ ATUQ54GMLE3)
(AVUQ42GLLA0/ AVUQ48GLLA0/ AVUQ54GLLA0)
(ABUQ42GRLA0/ ABUQ48GRLA0/ ABUQ54GRLA0)

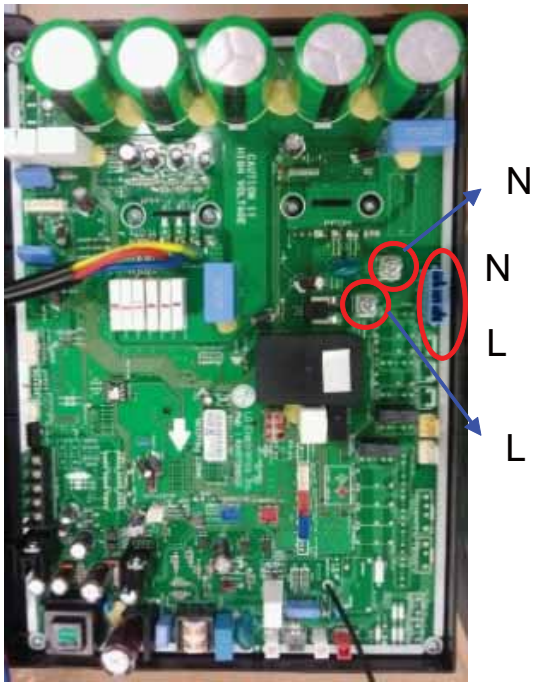

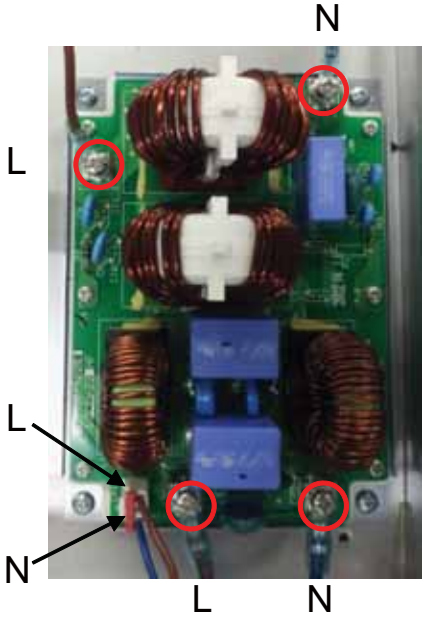



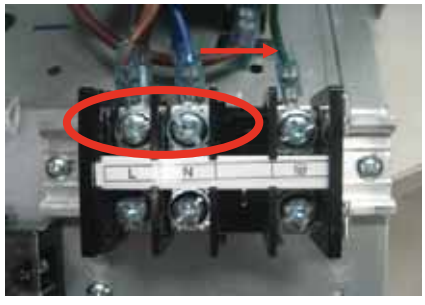

< Input Power Source Check Point >

Copyright ©2013 LG Electronics. Inc. All right reserved.
Only for training and service purposes

LGE Internal Use Only



P/NO : MFL67478303

June, 2013