LG
Life's Good

用戶手冊

LED TV*

* LG LED TV 使用的是帶LED背光的LCD螢幕。

請於操作產品前仔細閱讀本手冊並將其保留以供未來參考之用。

42LN6150
47LN6150

P/NO : MFL67694413 (1305-REV00)

www.lg.com

安全指示

使用本產品前，請仔細閱讀安全注意事項。

警告



- 請勿將電視及遙控器放置於下列環境：
  - 陽光直接照射之位置
  - 高濕度範圍，例如浴室
  - 發熱源附近例如煮食爐及其他發熱裝置
  - 輕易暴露於蒸汽或油煙如廚房工作範圍或放濕器附近
  - 暴露於雨水或當風位置
  - 靠近儲水容器例如花樽

  否則，可能導致火災、觸電、產品不能正常運作或變形。



- 請勿將產品放置在暴露於灰塵的地方。
  將可能引致火災。

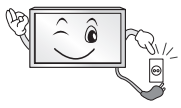

- 從裝置拔下電源插頭。 插頭必須保持易於操作。



- 請勿以濕手接觸電源插頭。 若插頭蘇腳沾濕或被灰塵覆蓋，請徹底弄乾電源插頭或擦拭灰塵。
  過於潮濕有可能導致觸電。



- 確保將電源線連接接地電流。（未有設置安全地線的裝置除外。）
  有可能導致觸電或受傷。

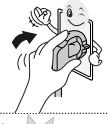

- 徹底固定電源線。
  如電源線未徹底固定，則可能引起火災。

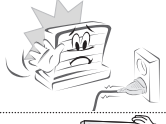

- 確保電源線並無與發熱源（如暖爐）接觸。
  這可能會導致火災或觸電危險。

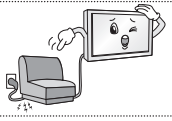

- 切勿將重物或產品本身置於電源線上。
  否則，可能導致火災或觸電。

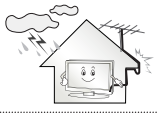

- 將天線屈疊於建築物之間以防止雨水流入產品。
  此有可能引致水分損壞產品內部並導致觸電。



- 於將電視安裝於牆上時，確保不要以電視背部之電源及信號線懸掛安裝。
  此有可能導致火災、觸電。

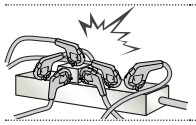

- 請勿於單個多重電力輸出插座使用過多電力裝置。
  否則將有可能因過熱引發火災。



- 請勿讓產品跌落或使其於與外部裝置連接時翻倒。
  否則將可能導致受傷或產品損壞。



- 請將包裝防潮材料或乙烯基包裝物料放置在兒童無法觸及的地方。
  防潮材料爲有害物質，不可吞食。 若不小心吞食，請用力使其吐出，並前往鄰近醫院就醫。 乙烯基包裝物亦可引起窒息。 請放置於兒童無法觸及的地方。



- 切勿讓孩童攀爬於電視上。
  否則將導致電視翻倒並引致嚴重受傷。



- 於廢棄電池時注意以防止孩童吞食。
  如小孩不慎吞食電池請尋求醫生協助即時就醫。

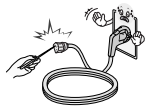

- 切勿於輸入端口連接至入牆插座時以任何金屬物體/導電體（例如金屬筷子/刀具/螺絲批）插入電源線插頭及入墻輸入插座間。 另外，插入牆壁的輸入端口後，請勿立即接觸電源線。 將可能導致觸電。
  （視乎型號而定）



- 請勿於產品附近放置或儲存易燃物品。
  可導致因不慎處理易燃物品而引致着火/爆炸或火災



- 請勿將金屬物體（例如錢幣、髮夾、筷子或金屬絲等）或易燃物（如紙張及火柴）投入產品內部。 請特別格注意兒童安全。
  可能導致觸電、發生火災或受傷。 若有異物掉入產品內，請拔除電源線，並聯絡服務中心。



- 請勿於本產品上噴水，或用易燃物質（苯或稀釋劑）拭擦。
  可導致火災或觸電。



- 請勿撞擊本產品，勿使任何物件掉入本產品中，不可用物件拋擲屏幕。
  可能引致受傷或產品損壞。

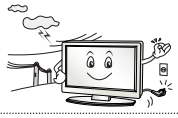

- 雷電或颱風時，嚴禁觸碰本產品或天線。
可能導致觸電。



- 於氣體洩漏時，嚴禁觸碰入墻電源插座，並打開窗戶通風。
可能因火花引起火災或燒毀。



- 請勿隨意自行拆開、維修或修改產品。
可導致火災或觸電。
聯絡服務中心進行檢查、校準或維修。



- 如發生任何下列情況，即時切斷產品電源並聯絡當地服務中心。
  - 產品曾受震盪而產生撞擊
  - 產品曾受損毀
  - 產品曾被異物進入
  - 產品曾產生煙霧或不尋常氣味

可能導致火災或觸電。



- 若長時間不使用產品，請拔除產品電源線。
灰塵覆蓋可導致火災，或絕緣層受損可導致漏電、觸電或火災。

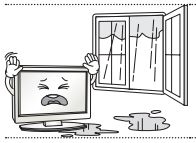

- 不可將產品暴露於滴水或水環境下；不可於產品上放置任何裝有液體的物件，例如花瓶。

注意



- 將產品安裝於不存在無線電波的地方。



- 請於電源線及天線間預留足夠空間以防止當天線掉落時觸及電源線。
此將可能導致觸電。



- 請勿將產品安裝於不穩固的層架或斜面上。 亦應避免將產品放置於震動或不能安全承托產品的位置。
否則，可能因產品跌落或翻倒而導致受傷或產品損壞。

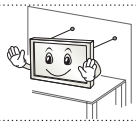

- 如將電視安裝於底座上，請採取措施以預防產品翻倒。 否則，將可能導致電視翻倒並引致受傷。

- 如希望將產品安裝於牆上，請於產品背面安裝 VESA 標準掛牆介面（選擇性配件）。 於安裝套件以使用掛墻框（選擇性配件）時請注意固定以防墜落。
- 只使用製造商指定的附件/配件。



- 於安裝天線時請諮詢認可技師。
此可能引起火災或觸電危險。

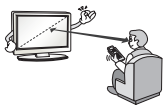

- 建議於觀看電視時保持最少爲螢幕對角線長度 2 至 7 倍之距離。
如長時間觀看電視有可能導致視力模糊。

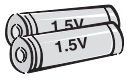

- 規定使用特定類型電池。
此可能導致遙控器損壞。

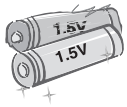

- 請勿將新舊電池混合使用。
此可導致電池過熱及洩漏。

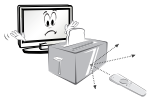

- 確保遙控器與感應器之間並無物件。



- 遙控器信號有可能受陽光或其他強光干擾。 如此情況發生，將室內環境調暗。



- 當連接外部裝置如電視遊戲機時，確保連接線有足夠長度。
否則，可能因產品跌落或翻倒而導致受傷或產品損壞。



- 請勿以插入或拔除電源插頭方式開啓/關閉產品。 （請勿使用電源插頭作爲開關用途。）
此可導致機件損壞或觸電可能。

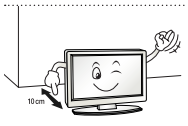

- 請遵從下列安裝指示以防止產品過熱。
  - 產品與牆壁的距離應超於 10 厘米。
  - 請勿將產品安裝於不通風位置（例如：書櫃或櫥櫃內）。
  - 請勿將產品安裝於地毯或軟墊上。
  - 確保桌布或窗簾並無妨礙通風口。

否則可能引致火災。

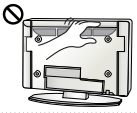

- 請注意於長時間觀看電視期間避免接觸通風口因其可能散發熱力。 此並不影響產品的運作或性能。

- 請定期檢查設備纜線，如外表受損或變形，請立即拔除電源，停止使用設備，並請授權服務商更換受損部份。



- 防止灰塵積聚於電源插頭或插座上。
將可能引致火災。

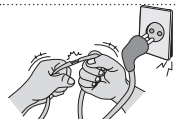

- 保護電源線以防止受到物理性如扭曲、折彎、緊夾、受到門的擠壓或踩踏或機件受損。 請加倍留意插頭、入墻插座以及裝置的電線出口。



- 請勿以手或指甲、鉛筆或鋼筆等尖銳物件用力按壓面板，或使其刮花。



- 避免長時間接觸或以手指、握緊螢幕。 如不遵從將可導致螢幕短暫變形。



- 請於清洗產品及其組件時先拔除電源並以軟布拭擦。 使用力度過大將可能導致磨損或褪色。 請勿以水噴灑或以濕布拭刷。 嚴禁使用會對產品及其面板構成損壞的化學品如玻璃清潔劑、汽車或工業增亮劑、磨光劑或蠟劑、苯、酒精等。
否則，將可能導致火災、觸電或產品損壞（變形、腐蝕或破裂）。

- 當裝置連接到交流電入墻插座，即使以開關關閉裝置，也不會與交流電源斷開。



- 於拔除電源插頭時，抓緊插頭以將其拔除。
如電源線內的金屬線脫離將可能引致火災。



- 於移動產品時，確保先將電源關閉。 然後，拔除電源線、天線纜線及所有連接纜線。
電視組合或電源線有可能受損並因此引發火災或觸電可能。



- 當移動產品或移除產品包裝時因產品重量需二人同時進行。
否則可能導致受傷。



- 每年聯繫服務中心一次，以清洗本產品的內部零件。
積聚的灰塵可導致機件故障。



- 向合資格服務人員諮詢所有有關維修事宜。 當產品受到任何形式的損壞時，例如電源線或插頭損壞，液體濺入或物件落入裝置中，裝置暴露於雨水或潮濕環境，裝置不能正常工作，或裝置掉落摔壞，均需進行維修服務。



- 如接觸產品時感覺冰冷，於開啓時可能出現「跳線」情況。 此爲正常情況，產品並無異常。



- 產品面板乃可提供二百萬至六百萬像素之高科技顯示產品。 微細黑點及/或高亮彩色光點（紅色、藍或綠色）可能以每百萬分一 單位出現於顯示面板上。 此並不代表非正常運作及並不影響產品之性能及其可靠性。
此現象亦會於第三方產品出現並不接受更換或退款。



- 於不同位置（左/右/上/下方）觀看時可能感受到面板不同亮度及顏色顯示。
此現象的出現乃顯示面板的特性。 此與產品性能無關，並其運作正常。

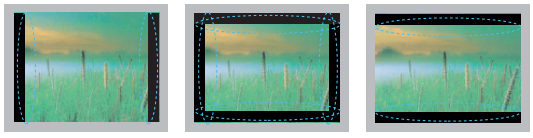

- 如影像靜止一段時間，爲達至最佳節能效果，螢幕可能會變得暗淡。只需操控遙控器或轉換影像，螢幕的亮度便會回愎正常
- 長時間顯示靜態影像（例如：廣播頻道標誌、螢幕功能表、電視遊戲情景）可導致因螢幕損壞而出現稱爲影像殘留的重影現象。 產品保養範圍並不包括影像殘留。
避免於電視螢幕上長時間顯示固定影像（液晶顯示 2 小時或以上；等離子顯示 1 小時或以上）。
並，如於電視上長時間以 4:3 比例觀看，影像殘留於面板顯示邊緣出現。
此現象亦會於第三方產品出現並不接受更換或退款。

- 產生聲音
「咔噠」斷裂雜音：於觀看或關閉電視時出現的斷裂雜聲乃因溫度與濕度而導致塑料的熱收縮所產生。此等雜聲於遇熱膨脹之產品較爲常見。 電路嗡聲/面板訊噪：低水平雜音乃由高速切換電路以產生大量電流令產品運作時發出。 其因應產品會有所不同。
雜音之產生並不影響產品的性能及可靠性。

授權

受支援的授權因型號而有所不同。 更多有關授權的詳細資料，請瀏覽 www.lg.com。

由 Dolby Laboratories 授權製造。

「杜比」、「Dolby」與雙 D 記號是 Dolby Laboratories 的商標。

The terms HDMI and HDMI High-Definition Multimedia Interface, and the HDMI logo are trademarks or registered trademarks of HDMI Licensing LLC in the United States and other countries.

關於 DivX 影片：DivX® 是 Rovi Corporation 的子公司 DivX, LLC 創建的數位影片格式。這是可播放 DivX 影片的 DivX Certified® 官方認證裝置。如需進一步資訊以及可用來轉檔成 DivX 影片的軟體工具，請造訪 divx.com。

關於 DivX 隨選影片：此 DivX Certified® 裝置必須註冊，才能播放所購買的 DivX 隨選 (VOD) 影片。若要取得註冊碼，請在裝置設定選單中尋找 DivX VOD 區段。有關如何完成註冊的進一步資訊，請移至 vod.divx.com。

「DivX Certified® 可播放畫質高達 1080p 的 DivX® 影片，包括付費內容。」

「DivX®、DivX Certified® 和相關標誌是 Rovi Corporation 或其子公司的商標，經授權許可使用。」

「包含下列一或多個美國專利：

7,295,673；7,460,668；7,515,710；7,519,274。」

Manufactured under license under U.S. Patent Nos: 5,956,674; 5,974,380; 6,487,535 & other U.S. and worldwide patents issued & pending. DTS, the Symbol, & DTS and the Symbol together are registered trademarks & DTS 2.0+Digital Out is a trademark of DTS, Inc. Product includes software. © DTS, Inc. All Rights Reserved.

開放源碼軟件聲明

如要取得產品中包含的 GPL、LGPL、MPL 和其他開放來源授權的來源碼，請瀏覽 http://opensource.lge.com。

除來源碼以外，所有有關授權條款、保養免責聲明及版權聲明都可供下載。

LG Electronics 在 CD-ROM 上提供來源碼並透過向 opensource@lge.com 發送電子郵件請求以支付涉及執行此類分銷的費用（例如媒介成本、運輸和處理成本）。 僅於產品購買日期當天起計算三 (3) 年內有效。

目錄

2 安全指示

5 授權

5 開放源碼軟件聲明

6 目錄

7 安裝步驟

7 裝配與準備
7 打開包裝
9 單獨購買
10 部件與按鍵
11 抬起與移動電視
12 安裝電視
12 - 安裝底座
13 - 安裝到桌面
14 - 整理纜線
15 - 安裝在牆上

16 進行連線
16 連接天線或纜線
17 連接至 HD 接收器、DVD 播放器或 VCR
17 - HDMI 連接
18 - DVI 至 HDMI 連接
19 - 連接至手機
20 - 色差連接
21 - 視頻輸入連接
22 連接至電腦
22 - HDMI 與 DVI 連線或 HDMI 連線
24 連接至音頻系統
24 - 數碼音頻連接
25 連接耳機
25 連接 USB 設備

26 遙控器

28 使用指南

29 規格

30 外置控制裝置設置

31 維護
31 清潔電視
31 - 螢幕、邊框、地櫃及底座
31 - 電源線

31 疑難排解

設置

注意

- 於您電視上顯示的影像可能有異。
- 您電視的 OSD（熒幕顯示）可能與此手冊中顯示的內容略有不同。
- 可用的功能表及選項可能與您使用的輸入來源或產品型號有所不同。
- 新功能或將添加至此電視。

安裝步驟

1 開啓包裝並確保所有配件都已提供。

2 將底座連接至電視機。

3 將外部設備連接至電視機。

4 確保網絡連接可用。
只有當網絡連接成功時方可使用電視網絡功能。

裝配與準備

打開包裝

檢查產品盒中是否包含以下配件。 如果有任何缺失的配件，請聯絡向您出售產品的本地經銷商。 本手冊的插圖可能與實際產品和部件有所不同。

注意

- 請勿使用任何未經批准部件，以確保安全和產品壽命。
- 因使用未經批准物品而造成的任何損壞或傷害並不包括在保修範圍內。
- 某些型號在螢幕上附有一層保護薄膜，它是螢幕的一部分，不要將其移除。

注意

- 產品隨附的部件視乎型號而可能有所不同。
- 本手冊的產品規格或內容或會因產品功能升級而隨時變更，恕不另行通知。
- 爲了獲得最好的連接效果，HDMI 纜線和 USB 裝置接頭厚度應少於 10 毫米，寬度應少於 18 毫米。
- 如果 USB 纜線或 USB 記憶卡與您的電視的 USB 端口尺寸不符，請使用支援 USB 2.0 的延長線。

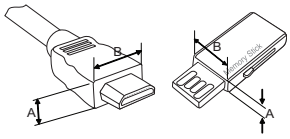

*A ≤ 10 毫米
*B ≤ 18 毫米

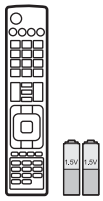

遙控器、電池 (AAA)
(請參閱頁 26)

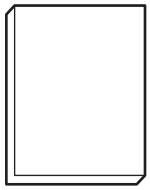

用戶手冊



電源線

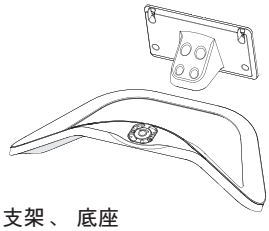

支架 、 底座
(請參閱頁 12)



底座安裝螺釘
8個、M4 x 14
(請參閱頁 12)



纜線固定夾
(請參閱頁 14)

(適用於 42LN6150)



牆架螺絲
2個、M4 x 8
(請參閱頁 13)

(適用於 47LN6150)



牆架螺絲
2個、P4 x 8
(請參閱頁 13)

(適用於 42/47LN6150)

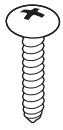

底座固定螺釘
2個
(請參閱頁 13)

(適用於 42/47LN6150)



平面固定纜線
2個
(請參閱頁 13)

單獨購買

單獨購買配件可在沒有另行通知情況下因品質改善原因而變更。
請聯絡經銷商以購買該配件。
這些配件只適用於個別型號。
型號名稱或設計可因應生產商的服務或政策作出變更。

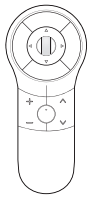

AN-MR400
神奇遙控器

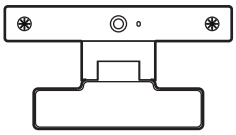

AN-VC4**
視訊電話攝像頭

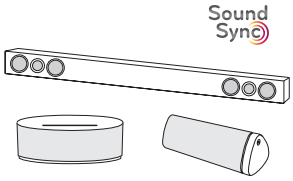

LG 音效裝置

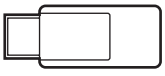

AN-WF100
寬帶/DLNA 無限網絡適配器

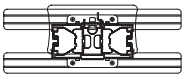

壁掛支架
LSW130B

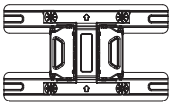

壁掛支架
LSW230B

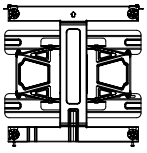

壁掛支架
LSW430B



AN-BL***
無線紅外線發射器
(此功能不是所有型號都適用)

部件與按鍵

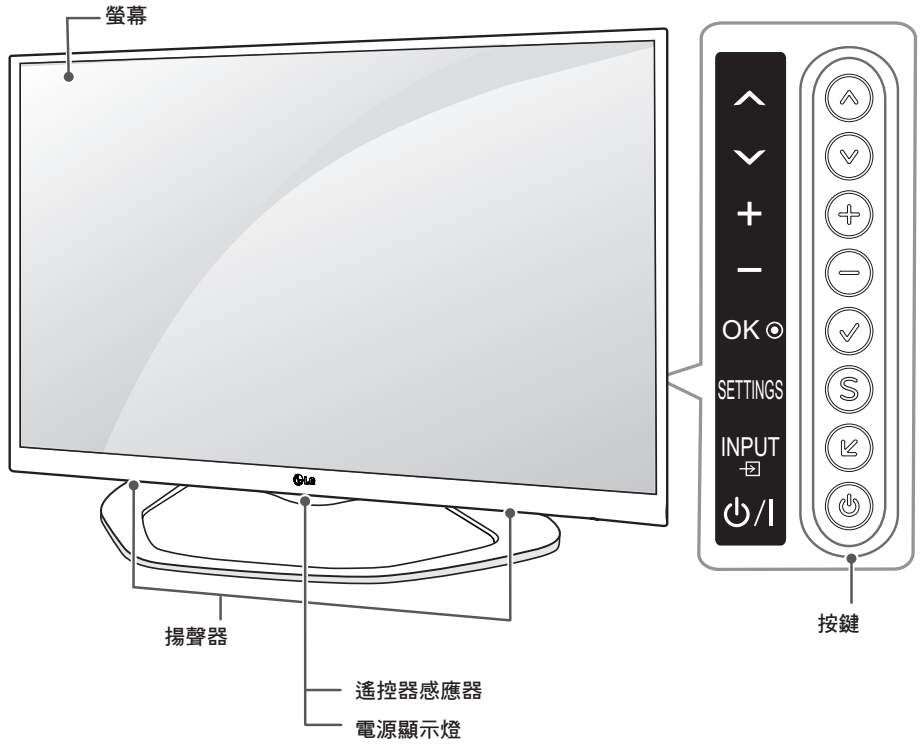

按鍵	說明
/ (^ / v)	滾動瀏覽保存的頻道。
/ (+ / -)	調整音量。
(OK)	選擇突出顯示的菜單選項或確認輸入。
(SETTINGS)	進入主選單，保存您的輸入源或退出選單。
(INPUT)	選擇外部輸入模式。
(/ I)	開啓或關閉電源。

抬起與移動電視

不論任何類型及大小，抬起或移動電視時，請閱讀下文，確保安全搬運，以防電視刮花或受損。

注意

- 避免經常接觸螢幕否則可能導致其損壞。

- 建議以包裝箱或連同電視原有的包裝材料移動電視。
- 移動或抬起電視前，中斷電源線和所有纜線的連接。
- 當握住電視時螢幕應面向外側以避免損壞。



- 握穩電視的頂部和底部。 確保不要握住透明部分、喇叭或喇叭排孔區域。

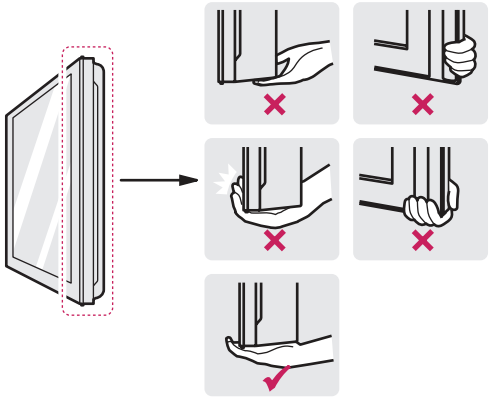

- 大型電視需最少二人共同運送。
- 使用人手搬運電視時，請根據以下圖示握住電視。

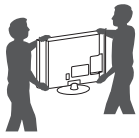

- 搬運電視時，請勿搖動或令電視受過度震動。
- 搬運電視時，保持電視直立，切勿轉向電視的側面，或向左方或右方傾斜電視。

安裝電視

根據觀看的需要，可將電視安裝在牆上或 將電視與底座固定放在桌面上。

安裝底座

如果不將電視安裝到牆壁上，請按照以下說明，將電視安裝在底座上。

注意

- 將底座固定到電視上時，電視機螢幕應面向下方並安放於附有軟墊的桌面或平面 上以避免螢幕磨損。
- 確保螺絲已完全上緊。 （如果沒有穩固旋緊螺絲，電視在安裝後可能會向前傾斜。）
- 切勿過分用力上緊螺釘；否則螺釘將會損壞從而變得鬆動。

注意

- 將電視安裝於壁掛支架前需反方向轉動底座以將之移除。

1

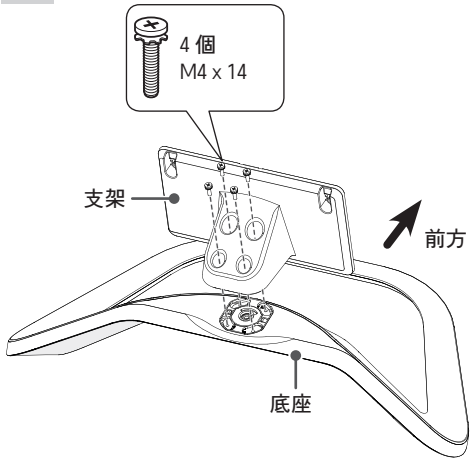

2

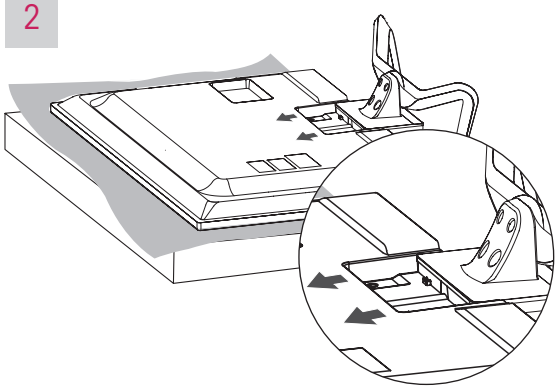

3

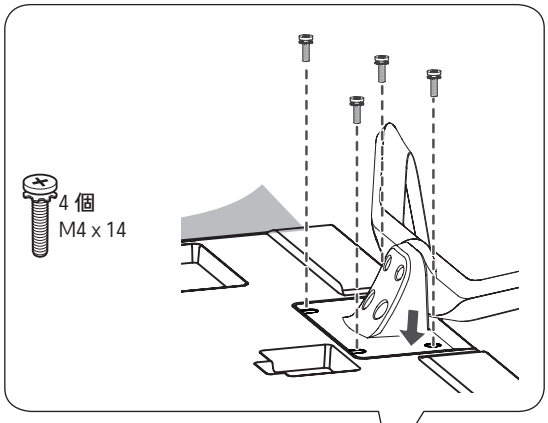

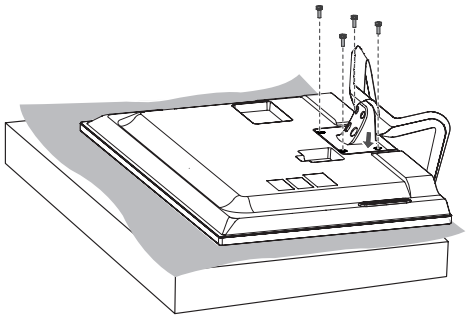

安裝到桌面

1 將電視機抬起並擺放在桌子上，保存機身豎直方向。
- 與牆壁保留最少 10 厘米空間以保持空氣流通。

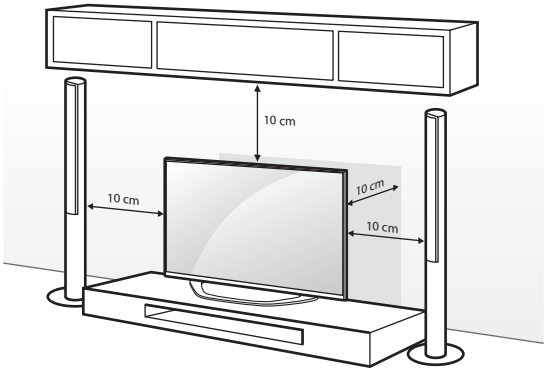

2 將電源線連接至牆上電源插座。

注意
- 請勿將電視置於發熱源附近，因此可能引發火災或其他損害。

調校電視以符合觀看角度

調校電視以符合觀看角度
向左方或右方旋轉 15 度以將電視調校至適合觀看角度。

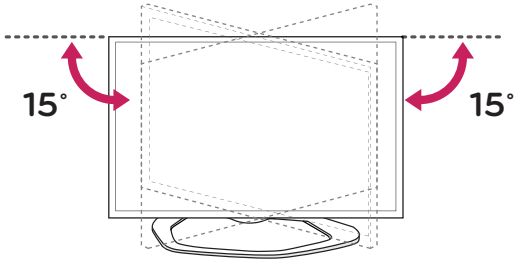

注意
- 於調校產品角度時請注意小心手指。
  » 如夾到手部或手指可導致身體受傷。 如產品過度傾斜，將可能跌落並導致損壞或受傷。

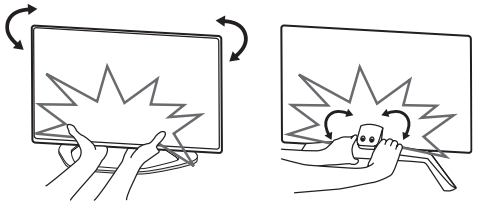

將電視穩固在桌上

(適用於 42/47LN6150)
將電視機固定在桌子上，以免前傾、損壞和潛在傷害。
將電視機安裝在桌子上，並在底座背部插入和扭緊隨附的螺釘。

1 使用上牆架螺絲將平面固定纜線連接至底座。

2 使用平面固定螺絲將平面固定纜線固定至平面上。

3 當固定電視後，將電視機盡量移動至接近牆壁位置。因兒童可能會進入電視機與牆壁的空隙間而導致受傷。

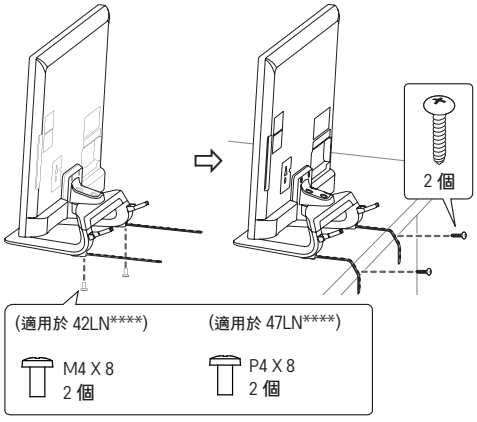

警告
- 要防止電視墮下，應按照安裝指示將電視穩固安裝在地面/牆壁上。 傾斜、搖動或搖晃電視可能會導致受傷。

將電視安裝至牆壁（自行決定）

(此功能不是所有型號都適用)

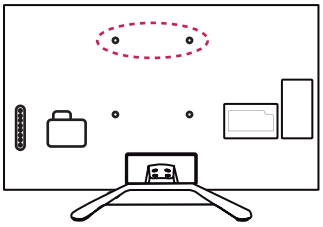

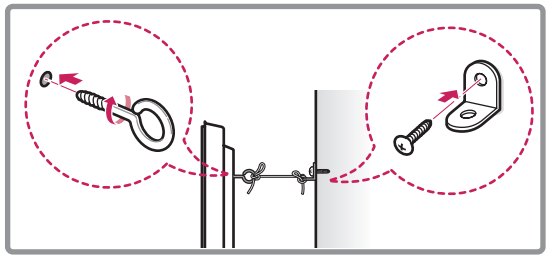

1 在電視背面插入并擰緊環首螺絲或 固定片和螺絲。
- 如果在環首螺絲位置中插入了螺絲，請先將這些螺絲取出。

2 用螺絲將固定片安裝到牆上。
將壁掛支架的位置對準電視背面的環形螺絲。

3 以堅固繩索將環形螺絲及壁掛支架連接。
確保繩索與平面保持水平。

注意
- 確保孩童不要攀附於電視上。

注意
- 使用堅固平臺或矮櫃以穩固承托電視。
- 壁掛支架、螺絲及繩索需另行購買。 您可從本地經銷商取得其他配件。

Kensington安全系統(另外購買)

(此功能不是所有型號都適用)
Kensington(肯辛通) 安全系統連接在電視機的背面。更多安裝適用信息請參考 Kensington(肯辛通) 安全系統提供的使用说明书，或者登录 http://www.kensington.com
在電視機和桌子之間連接 Kensington(肯辛通) 安全系統線纜。
以下僅爲示意圖，可能與實物不符，以實物爲準。

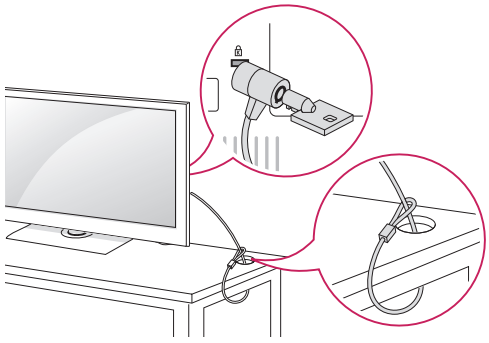

注意
- Kensington(肯辛通)安全系統是可選附件，您可以從
- 當地供應商那裡獲得附件。

整理纜線

1 收攏電纜並用纜線固定夾捆綁。

2 纜線整理器牢固於電視背面。

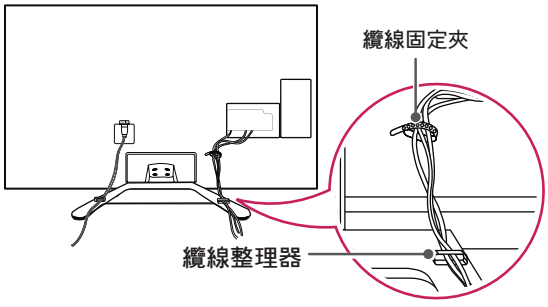

注意
- 請勿緊握纜線固定夾移動電視，否則纜線固定夾可能破裂並導致受傷及電視損壞。

安裝在牆上

小心地將掛架連接至電視機背面，並將掛架垂直於地板，安裝於實心牆上。當您需將電視機安裝到其他建築材料上時，請聯繫專業人員。建議您使用LG品牌壁掛支架。

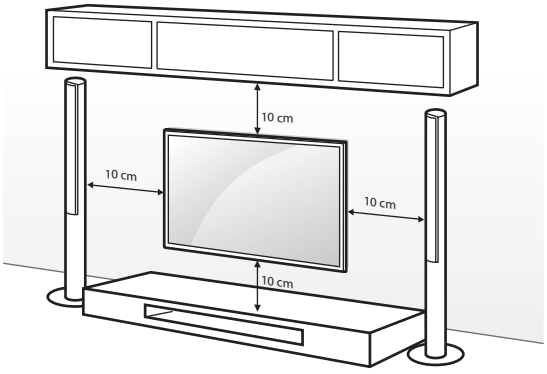

確保所使用的螺絲及壁掛支架合符 VESA 標準。 壁掛支架的標準尺寸見下表。

型號	42LN6150	47LN6150
VESA (A x B) 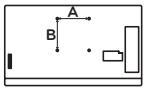	200 x 200	400 x 400
標準螺絲	M6	M6
螺絲數目	4	4
壁掛支架（選購）	LSW230B MSW240	LSW430B MSW240

壁掛支架（選購）	
LSW230B	
LSW430B	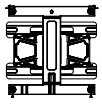
MSW240	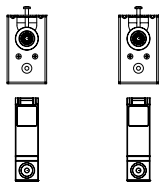

注意

- 先中斷電源線的連接，然後移動或安裝電視。 否則，將可能導致觸電。
- 若於天花或傾斜的牆面安裝電視，將可能跌落並導致嚴重受傷。
  請使用授權 LG 壁掛支架並聯絡當地經銷商及合資格人士。
- 請勿過度旋緊螺絲，否則會導致電視受損及保修失效。
- 使用符合 VESA 標準的螺絲和壁掛支架。 因誤用或使用不當配件而造成的任何損壞或傷害並不包括在保養範圍內。

注意

- 使用在 VESA 標準螺絲規格列出的螺絲。
- 壁掛支架套件包括安裝手冊和所需部件。
- 壁掛支架屬選購項目。 您可從本地經銷商取得其他配件。
- 螺絲長度視乎壁掛支架而有所不同。 確保使用合適的長度。
- 有關詳情請參閱壁掛支架隨附的說明。

進行連線

您可將不同的外部裝置連接至電視。 可用的外部裝置爲：HD 接收器、DVD 播放器、VCR、音效系統、USB 儲存裝置、電腦、遊戲裝置及其他外部裝置。 有關外部裝置連接的詳情，請參閱個別裝置隨附的手冊。

注意

- 如果您在 DVD 錄影機或 VCR 錄製電視節目，確保透過 DVD 錄影機或 VCR 將電視訊號輸入纜線連接至電視。 有關錄影的詳情，請參閱連接裝置隨附的手冊。
- 本使用說明書的插圖可能會與顯示的外部裝置連線略有不同。
- 不論電視連接埠順序爲何，連接外部裝置至電視。
- 如果您將遊戲裝置連接至電視，使用遊戲裝置隨附的纜線。
- 有關操作說明，請參閱外部裝置手冊。

連接天線或纜線

當連接天線或有線端口以觀看電視時，請參閱下文。 插圖可能與實際配件有所不同，而 RF 線是不提供的。

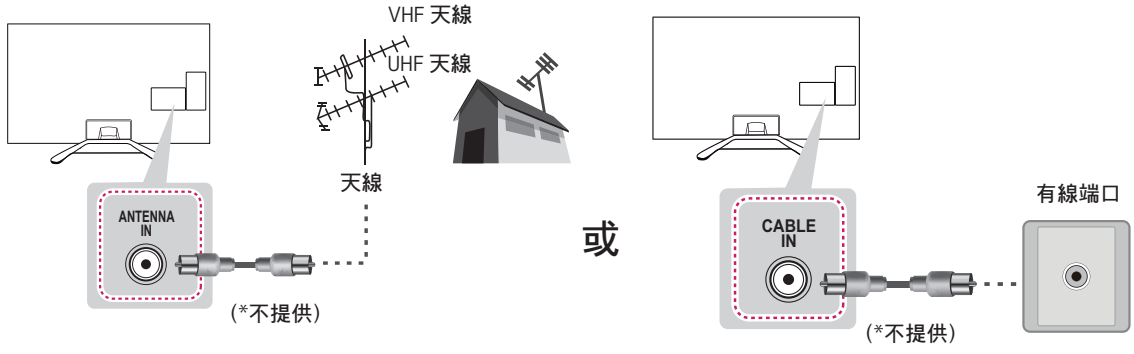

注意

- 要改善於訊號較差範圍的影像品質，請購買訊號放大器並正確安裝。
- 如使用兩部電視以上，使用訊號分線器。
- 如天線未能正確安裝，聯絡經銷商以獲取協助。
- 支援的數碼電視音效轉碼器：MPEG、Dolby Digital、HE-AAC。

連接至 HD 接收器、DVD 播放器或 VCR

將 HD 接收器、DVD 播放器或 VCR 連接至電視並選擇適當的輸入模式。

HDMI 連接

HDMI 爲連接裝置的最佳方式。

將數碼視訊和音效訊號從外部裝置傳輸至電視。 使用 HDMI 線如下圖所示連接外部裝置與電視。

注意

- 使用支援客戶數碼操控 (CEC, Customer Electronics Control) 功能的最新高速 HDMI™ 纜線。
- 已測試高速 HDMI™ 線可傳送高達 1080p 及以上的 HD 訊號。
- HDMI 音效支援格式：Dolby Digital、PCM（最高 192 kHz、32 kHz / 44.1 kHz / 48 kHz / 88 kHz / 96 kHz / 176 kHz / 192 kHz）、DTS。

選擇任何輸入 HDMI 輸入端口進行連接。
任何連連接端口均可使用。

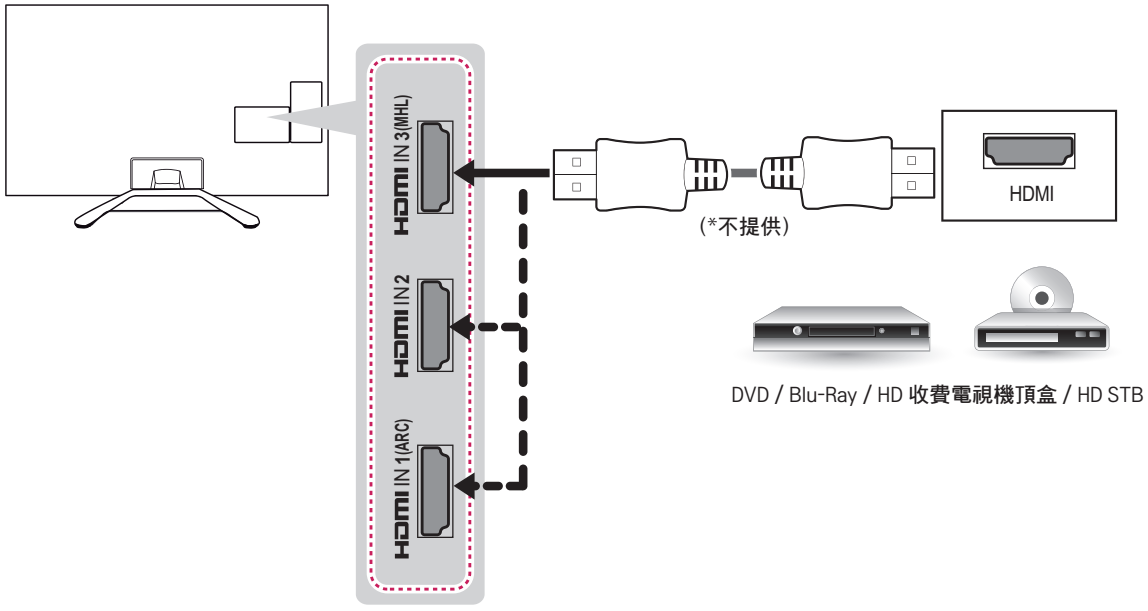

音訊返回頻道 (ARC, Audio Return Channel)

- 支援 SIMPLINK 及 ARC 的外置音訊裝置需使用 HDMI IN 1 (ARC) 端口以進行連接。
- 當連接至高速 HDMI 線後，支援 ARC 的外置音訊裝置將無需額外光學音訊纜線輸出光學 SPDIF 並支援 SIMPLINK 功能。

DVI 至 HDMI 連接

將數字視頻信號從外部裝置傳輸至電視。 使用 DVI-HDMI 線連接外部裝置與電視，如下圖所示。 如需傳輸音頻訊號，連接選購的音頻纜線。

注意

- 使用 HDMI/DVI 纜線時，僅支援單一連接。

選擇任何輸入 HDMI 輸入端口進行連接。
任何連連接端口均可使用。

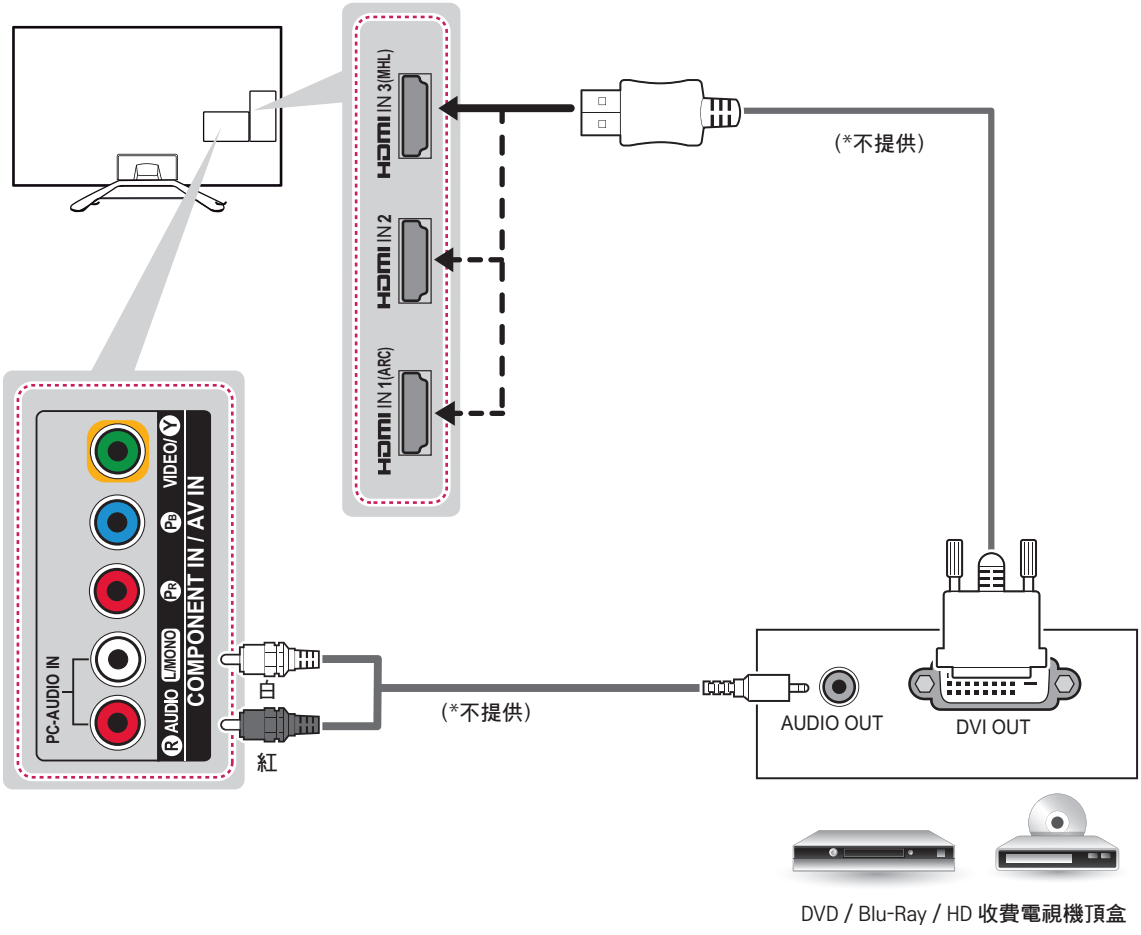

連接至手機

手機高清連結 (MHL) 是用於手機與電視間的數碼影音訊號傳輸介面。

注意

- 連接手機至 HDMI/DVI IN 3 (MHL) 輸入連接端口，以在電視上檢視手機畫面。
- 只適用於支持 MHL 的手機。
- 於某些支援 MHL 的手機，可使用電視遙控器控制手機。
- 連接電視與手機時需使用 MHL 傳輸纜線。
- 在以下情況下，從TV上拔下MHL傳輸纜線
  - MHL 功能停用時；
  - 移動裝置已完全充電並處於備用模式時從電視移除 MHL 纜線。

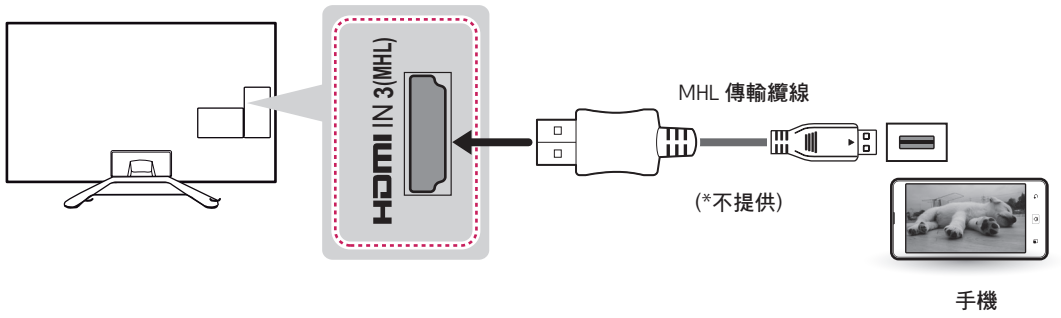

色差連接

將類比視訊和音頻訊號從外部裝置傳輸至電視。 使用分量纜線如下圖所示連接外部裝置與電視。

注意

- 如纜線安裝不正確，可導致圖像顯示爲黑白或色彩失真。
- 請檢查以確認纜線已連接至相應顏色的接口。

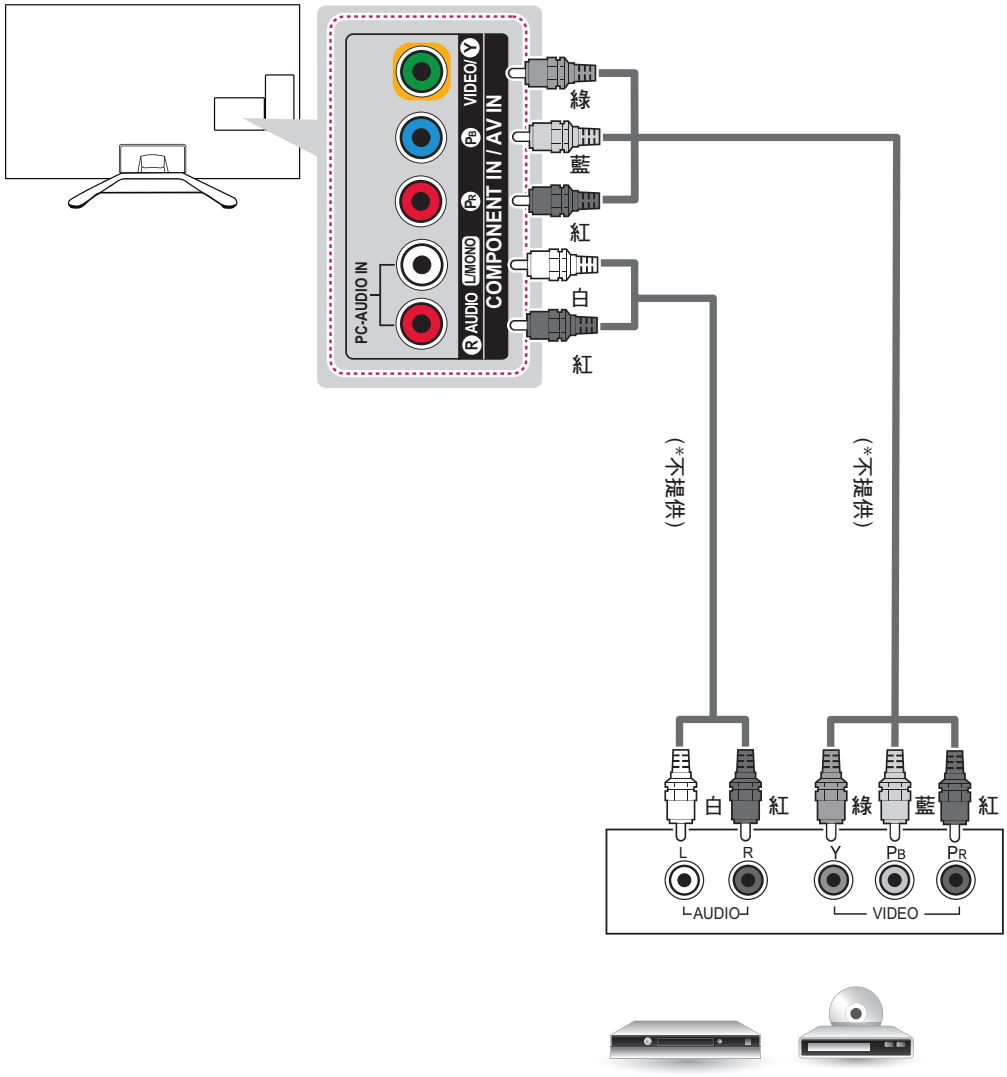

DVD / Blu-Ray / HD 收費電視機頂盒

視頻輸入連接

將類比視訊和音頻訊號從外部裝置傳輸至電視。 使用 複合纜線如下圖所示連接外部裝置與電視。

注意

- 請檢查以確認纜線已連接至相應顏色的接口。

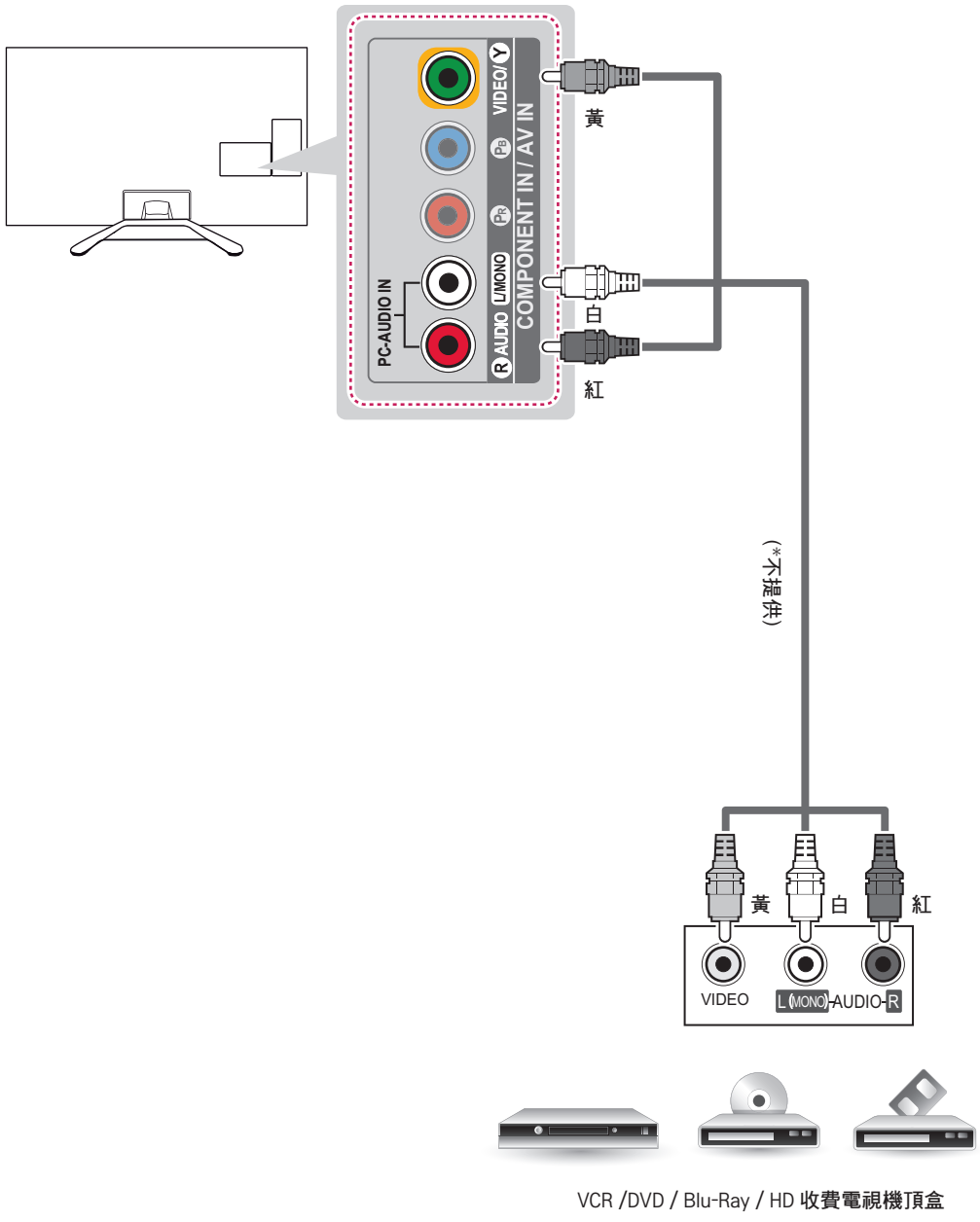

VCR /DVD / Blu-Ray / HD 收費電視機頂盒

連接至電腦

注意

- 建議使用 HDMI 連線以獲取最佳影像品質。
- 顯因爲顯卡的不同，DOS 模式可能於使用 HDMI-DVI 線時無法使用。
- 於 PC 模式，可能產生由分辨率、垂直格式、對比度或亮度引致的雜訊。 如出現雜訊，將電腦輸出變更爲其他分辨率或將刷新率變更爲其他頻率、或於 PICTURE 功能表中調整亮度和對比度，直至影像變爲清晰。
- 水平和場頻的同步輸入波形爲分開的。
- 顯因爲顯卡的不同，某些分辨率設定或導致影像未能處於畫面上的適當位置。
- 如使用的爲來自 PC 的 DVI 輸出，您需另外連接類比音效。 請根據下一頁的指示進行。
- 使用 HDMI/DVI 纜線時，僅支援單一連接。

HDMI 與 DVI 連線或 HDMI 連線

選擇方式 A 或方式 B 以進行連線。

方式 A： HDMI 連接

選擇任何輸入 HDMI 輸入端口進行連接。
任何連連接端口均可使用。

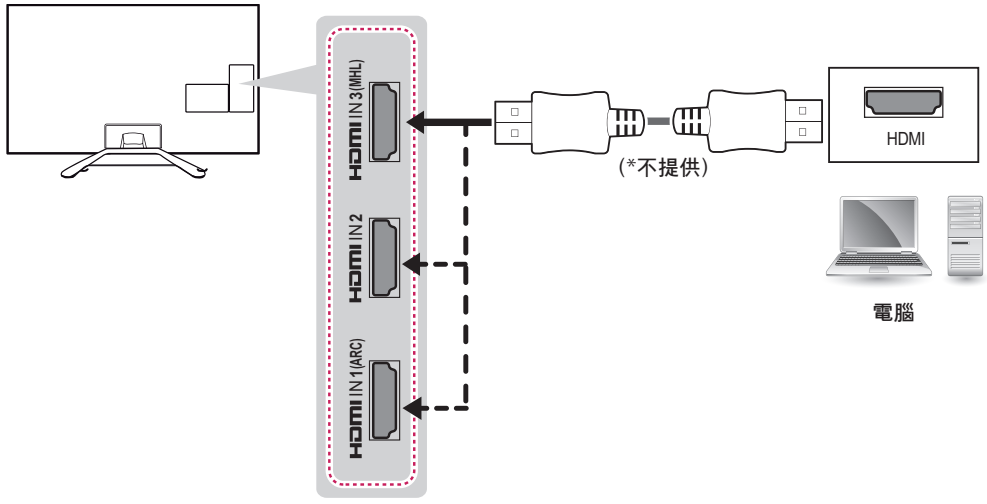

方式 B：DVI 至 HDMI 連接

選擇任何輸入 HDMI 輸入端口進行連接。
任何連連接端口均可使用。

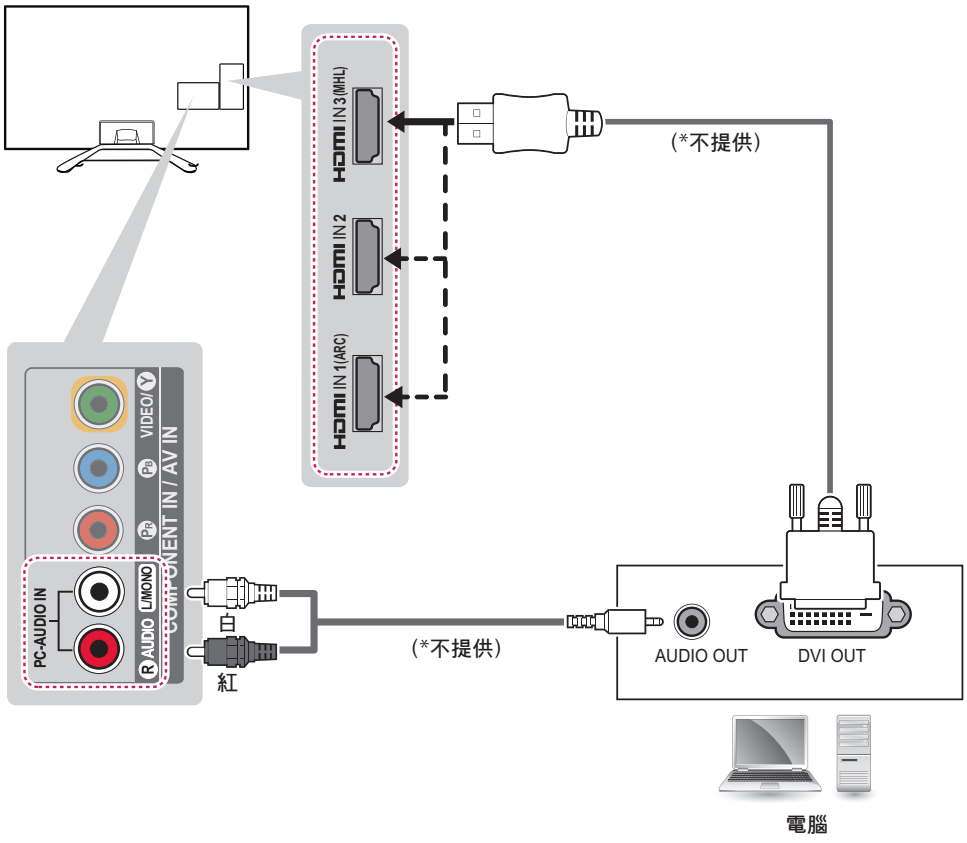

連接至音頻系統

你可以使用可選的外置音頻系統，而不使用內置喇叭。

數碼音頻連接

將電視的數碼音頻訊號傳輸至外部裝置。 使用 DVI-HDMI 線連接外部裝置與電視，如下圖所示。

注意

- 切勿凝視數碼音頻輸出端口。 凝視激光光束可能對視覺造成損壞。
- 配備音頻複製保護 (ACP, Audio Copy Protection) 的音頻功能可能阻止數碼音頻輸出。

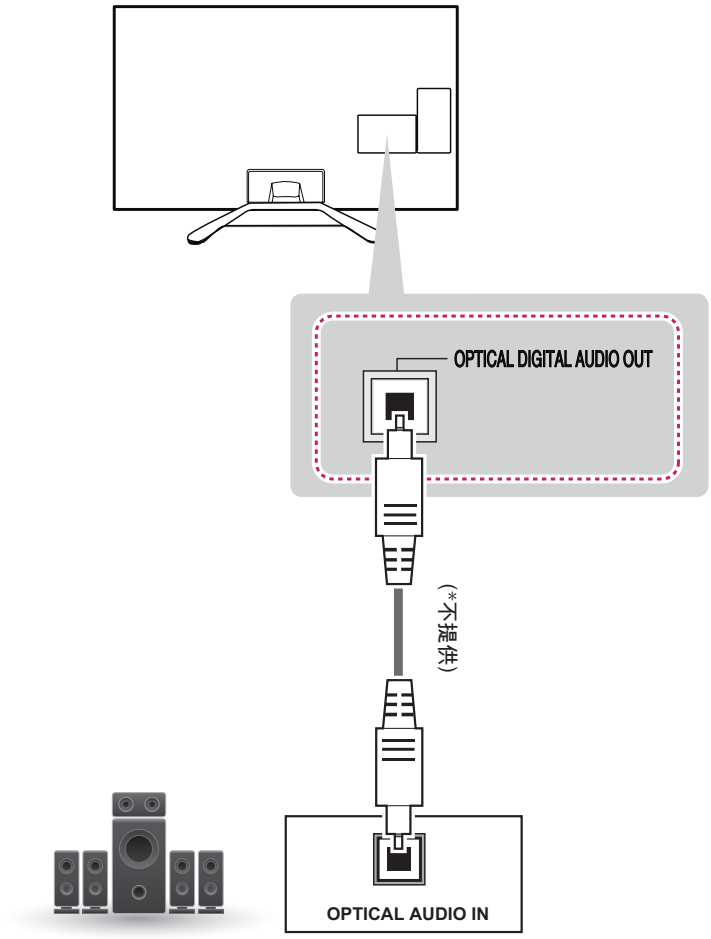

數碼音訊系統

連接耳機

可使用耳機收聽聲音。

注意

- 當連接耳機後音效功能表選項將會被停用。
- 使用連接的耳機變更 AV 模式時，變更只會套用在視訊上，而不會套用在音訊上。
- 當連接耳機後光學數碼音效輸出便不能提供。
- 耳機阻抗：16 Ω
- 耳機最大音效輸出：10 mW 至 15 mW
- 耳機插頭尺寸：0.35 厘米 0.35 cm

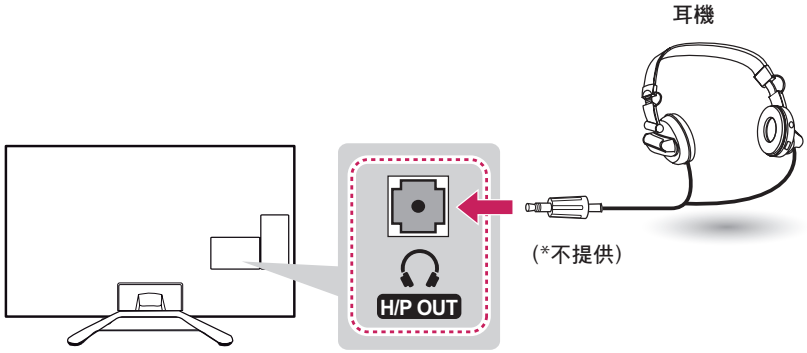

連接 USB 設備

將 USB 儲存裝置，如 USB 快閃記憶體、外置硬碟、或 USB 記憶卡讀取器連接至電視，然後進入 Smart Share 功能表即可使用各種多媒體檔案。

注意

- 某些 USB 集線器可能不能運作。 如連接至 USB 集線器的 USB 裝置未能被探測，可直接將裝置連接至於電視上的 USB 端口。

選擇任何輸入 USB 輸入端口進行連接。
任何輸入端口均可使用。

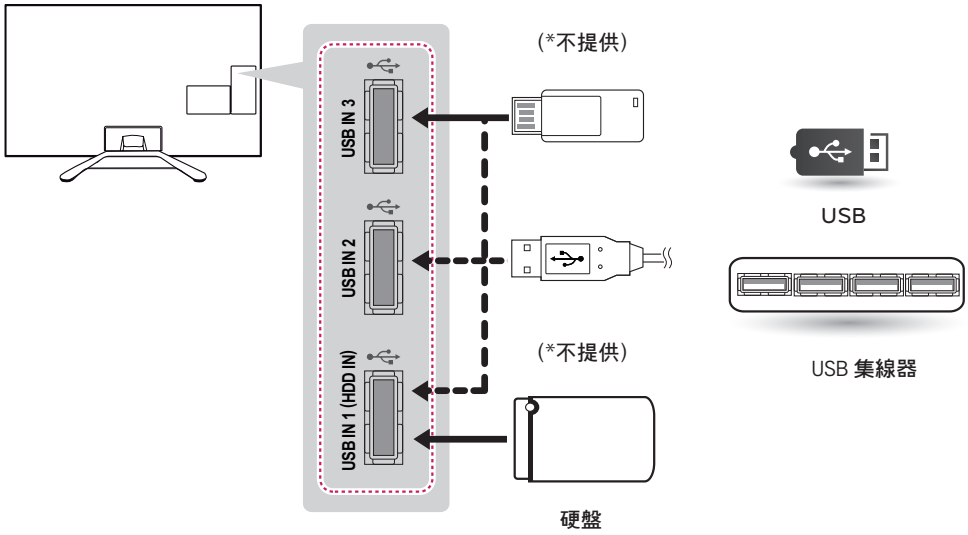

遙控器



本手冊的描述基於遙控器的按鍵而定。 請仔細閱讀本手冊並正確使用電視。 如需安裝電池，打開電池蓋， 更換電池 (1.5 V AAA) 時配對電池格內的 ⊕ 及 ⊖ 端標籤，然後關上電池蓋。 如要移除電池，以相反步驟執行動作。

注意

- 請勿混合使用新舊電池，否則遙控器可能受損。
- 某些遙控器按鍵於某些國家的類比模式電視有可能不能運作。

遙控器使用紅外線運作。 使用時應對準電視遙控感應器的方向。



（電源）
開啓或關閉電視。

（使用指南）
參閱使用指南。

RATIO
重新調整圖像的大小。

INPUT
選擇外部輸入模式。
亦可將電視從待機狀狀態切換至開啓狀態。

TV/RAD
選擇電視頻道或廣播頻道。

數字按鈕
輸入數字。

LIST
進入已儲存頻道列表。

Q.VIEW
轉到上次觀看的頻道。

+ −
調整音量。

FAV
在喜愛節目中切換。

SETTINGS
進入主菜單。

MUTE
打開或關閉聲音。

P
瀏覽保存的頻道。

PAGE
移至上一屏幕或下一屏幕。

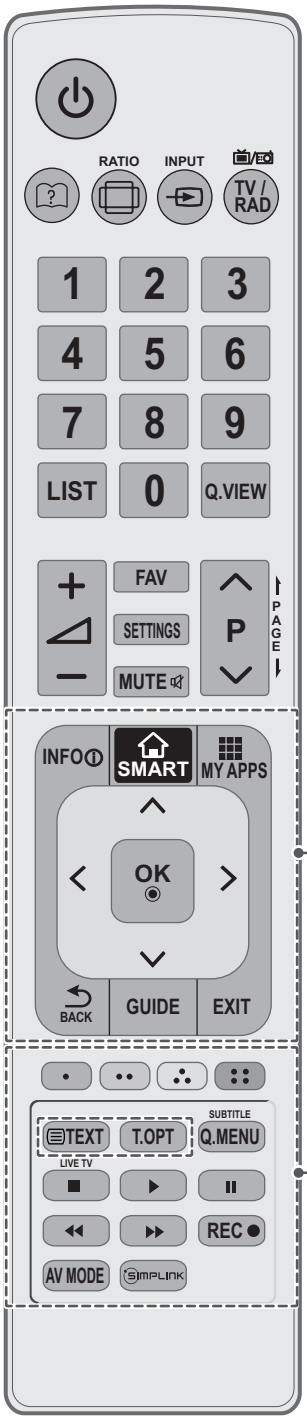

INFO ⓘ
查看當前節目和屏幕信息。

SMART
進入 Smart Home 功能表。

MY APPS
顯示應用程式清單。

導航按鍵 （上/下/左/右）
滾動閱覽菜單或選項。

OK
選擇菜單或選項並確認輸入。

BACK
返回至上一層。

GUIDE
節目播放時間將根據預定時間顯示。

EXIT
清除所有畫面顯示並返回觀看電視。

顏色按鈕
訪問某些菜單中的特殊功能。
（ ：紅、 ：綠、 ：黃、 ：藍）

電視文字按鍵 (TEXT, T.OPT)
此等按鍵用於電視文字廣播。

Q. MENU
進入快捷菜單。

SUBTITLE
在數碼模式調用所需字幕。

控制按鍵 （■、▶、❚❚、◀◀、▶▶）
控制SIMPLINK兼容設備。(USB,SIMPLINK)

LIVE TV
返回至即時電視。

REC ●
開始錄製及顯示錄製菜單。

AV MODE
選擇 AV 模式。

SIMPLINK
進入已連接至電視的 AV 裝置；
開啓 SIMPLINK 菜單。

使用指南

使用指南令您可更容易進入詳細電視資訊。

1 按 SMART 按鍵進入 Smart「主頁」菜單。

2 選擇使用指南並按 OK 鍵。

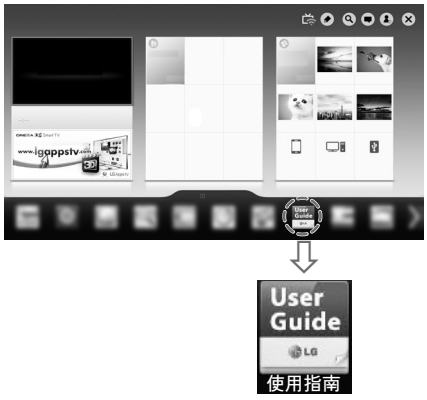

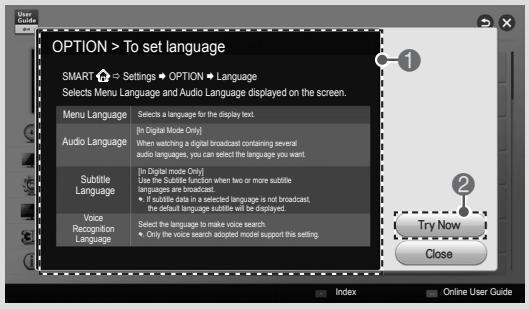

❶	顯示所選功能表的說明。 您可以使用導航鍵 ⋀ / ⋁ 在頁面之間移動。
❷	從使用指南直接移至所選菜單。

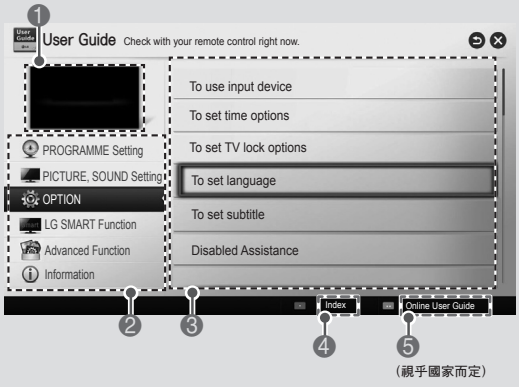

❶	顯示正觀看的視訊。
❷	節目指南類別。
❸	在目前類別中的一系列標題。 您可以使用導航鍵 ⋀ / ⋁ 鍵在頁面之間移動。
❹	關鍵字索引列於使用指南中。
❺	於已連接互聯網後可提供 LG Smart TV 功能的詳細資訊。 （可能因應國家/語言而未能提供。）

規格

產品規格可因產品功能升級變更而不另行通知。

		數碼訊號	類比訊號
香港	電視制式	DTMB	PAL D/K、PAL I、NTSC M
	節目範圍	DTMB：21 ~ 69	PAL D/K：VHF/UHF 1 ~ 69、CATV 1 ~ 47 PAL I：VHF/UHF 1 ~ 69、CATV 1 ~ 47 NTSC M：VHF/UHF 2 ~ 78、CATV 1 ~ 71
	外置天線抗阻	75 Ω	

環境條件	操作溫度	0 °C ~ 40 °C
	操作濕度	低於 80%
	儲存溫度	-20°C ~ 60 °C
	儲存濕度	低於 85%

關於電源供應及耗電量，參閱於產品上的標籤。

型號		42LN6150 (42LN6150-CB)
尺寸（寬 x 高 x 深）	含底座	964 x 631 x 294（毫米）
	不含底座	964 x 573 x 78（毫米）
重量	含底座	11.8 千克
	不含底座	10.0 千克
電源要求		AC 100-240 V~ 50 / 60 Hz

型號		47LN6150 (47LN6150-CB)
尺寸（寬 x 高 x 深）	含底座	1076 x 695 x 327（毫米）
	不含底座	1076 x 637 x 79.4（毫米）
重量	含底座	15.0 千克
	不含底座	12.8 千克
電源要求		AC 100-240 V~ 50 / 60 Hz

HDMI/DVI-DTV 支持的模式

分辨率	行頻 (kHz)	場頻 (Hz)
640 x 480	31.469 / 31.5	59.94 / 60
720 x 480	31.469 / 31.5	59.94 / 60
720 x 576	31.25 15.625	50 50
1280 x 720	37.500 44.96 / 45	50 59.94 / 60
1920 x 1080	33.72 / 33.75 28.125 26.97/27 33.716 / 33.75 56.250 67.43 / 67.5	59.94 / 60 50 23.97 / 24 29.976 / 30.00 50 59.94 / 60

HDMI/DVI-PC 支持的模式

分辨率	行頻 (kHz)	場頻 (Hz)
640 x 350	31.468	70.09
720 x 400	31.469	70.08
640 x 480	31.469	59.94
800 x 600	37.879	60.31
1024 x 768	48.363	60.00
1152 x 864	54.348	60.053
1280 x 1024	63.981	60.020
1360 x 768	47.712	60.015
1920 x 1080	67.5	60.00

compent端口的連接資訊

電視上的component端口	Y	P_B	P_R

DVD播放器上的 視頻輸出端口	Y	P_B	P_R
	Y	B-Y	R-Y
	Y	Cb	Cr
	Y	Pb	Pr

信號	Component
480i/576i	O
480p/576p	O
720p/1080i	O
1080p	O (僅 50 Hz/60 Hz)

外置控制裝置設置

要獲取有關外置控制裝置的設置資訊，請瀏覽「www.lg.com」。

維護

清潔電視

經常清潔電視以保持最佳性能及延長產品壽命。

⚠ 注意

- 進行清潔前請先關閉電源並拔除電源線及所有其他纜線的連接。
- 長時間不觀看或使用電視時，從壁式插座中斷電源線的連接，以防由閃電或劇增電源而可能造成的損壞。

螢幕、邊框、地櫃及底座

要清除灰塵或細微污垢，以乾爽清潔的軟布擦拭。
要清除頑固污垢，將軟布以清水或溫和清潔劑弄濕進行擦拭。 然後即時使用乾布擦拭。

⚠ 注意

- 請勿使用指甲或尖銳物件推動、磨擦或擊打表面，否則可能導致畫面上出現刮痕及圖像扭曲現象。
- 切勿對產品使用任何如蠟、苯、酒精、稀釋劑、殺蟲劑、空氣清新劑、潤滑劑等有可能導致畫面塗層損壞及褪色的化學品。
- 請勿在表面上噴上液體。 如果水滲進電視，可能導致火災、觸電或出現故障。

電源線

定期清除電源線上積聚的灰塵。

疑難排解

問題	解決方案
未能以遙控控制電視。	• 請檢查產品上的遙控器感應器，然後再試一次。 • 請檢查產品和遙控器之間是否有任何障礙物。 • 請檢查電池是否仍可使用，並已正確安裝（⊕對⊕，⊖對⊖）。
沒有圖像顯示或沒有聲音。	• 檢查產品是否已開啓。 • 檢查電線是否已連接至入墻插座。 • 連接其他產品，確認入墻插座是否出現問題。
電視突然關閉。	• 檢查電源控制設定。 電源供應可能中斷。 • 檢查是否已啓用時間設定中的自動睡眠功能。 • 如電視於開啓時沒有訊號，電視於無接收指令輸入狀態下於 15 分鐘後自動關閉。



記下電視的型號和序列號。
參考後蓋上的標籤，當您要求任何服務時將此資訊告之經銷商。

型號 _____

序號 _____

LG
Life's Good

OWNER'S MANUAL

LED TV*

* LG LED TV applies LCD screen with LED backlights.

Please read this manual carefully before operating your set and retain it for future reference.

42LN6150
47LN6150

www.lg.com

SAFETY INSTRUCTIONS

Please read these safety precautions carefully before using the product.

⚠ WARNING



- Do not place the TV and remote control in the following environments:
  - A location exposed to direct sunlight
  - An area with high humidity such as a bathroom
  - Near any heat source such as stoves and other devices that produce heat
  - Near kitchen counters or humidifiers where they can easily be exposed to steam or oil
  - An area exposed to rain or wind
  - Near containers of water such as vases

  Otherwise, this may result in fire, electric shock, malfunction or product deformation.



- Do not place the product where it might be exposed to dust. This may cause a fire hazard.

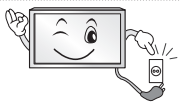

- Mains plug is the disconnecting device. The plug must remain readily operable.



- Do not touch the power plug with wet hands. Additionally, if the cord pin is wet or covered with dust, dry the power plug completely or wipe dust off. You may be electrocuted due to excess moisture.



- Make sure to connect the power cable to the grounded current. (Except for devices which are not grounded.) You may be electrocuted or injured.



- Fix the power cable completely. If the power cable is not fixed completely, a fire can break out.



- Ensure the power cord does not come into contact with hot objects such as a heater. This may cause a fire or an electric shock hazard.

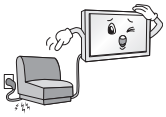

- Do not place a heavy object, or the product itself, on power cables. Otherwise, this may result in fire or electric shock.



- Bend antenna cable between inside and outside building to prevent rain from flowing in. This may cause water damaged inside the Product and could give an electric shock.



- When mounting a TV it on the wall, make sure not to install TV by hanging power and signal cables on the back of the TV. It may cause fire, electric shock.

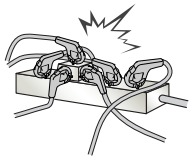

- Do not plug too many electrical devices into a single multiple electrical outlet. Otherwise, this may result in fire due to over-heating.

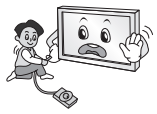

- Do not drop the product or let it fall over when connecting external devices. Otherwise, this may result in injury or damage to the product.



- Keep the packing anti-moisture material or vinyl packing out of the reach of children. Anti-moisture material is harmful if swallowed. If swallowed by mistake, force the patient to vomit and visit the nearest hospital. Additionally, vinyl packing can cause suffocation. Keep it out of the reach of children.



- Do not let your children climb or cling onto the TV. Otherwise, the TV may fall over, which may cause serious injury.



- Dispose of used batteries carefully to protect a child from eating them.Please seek Doctor- Medical Attention immediately if child consumes batteries.



- Do not insert any metal objects/ conductors (like a metal chopstick/ cutlery/ screwdriver) between power cable plug and input Wall Socket while it is connected to the input terminal on the wall. Additionally, do not touch the power cable right after plugging into the wall input terminal. You may be electrocuted. (Depending on model)



- Do not put or store inflammable substances near the product. There is a danger of combustion/explosion or fire due to careless handling of the inflammable substances.



- Do not drop metallic objects such as coins, hair pins, chopsticks or wire into the product, or inflammable objects such as paper and matches. Children must pay particular attention. Electrical shock, fire or injury can occur. If a foreign object is dropped into the product, unplug the power cord and contact the service centre.



- Do not spray water on the product or scrub with an inflammable substance (thinner or benzene). Fire or electric shock accident can occur.

ENGLISH



- Do not allow a impact shock or any objects to fall into the product, and do not drop onto the screen with something. You may be injured or the product can be damaged.



- Never touch this product or antenna during a thunder or lighting storm. You may be electrocuted.

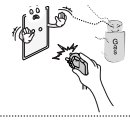

- Never touch the wall outlet when there is leakage of gas, open the windows and ventilate. It may cause a fire or a burn by a spark.



- Do not disassemble, repair or modify the product at your own discretion. Fire or electric shock accident can occur. Contact the service center for check, calibration or repair.



- If any of the following occur, unplug the product immediately and contact your local service centre.
  - The product has been impacted by shock
  - The product has been damaged
  - Foreign objects have entered the product
  - The product produced smoke or a strange smell

  This may result in fire or electric shock.



- If you don't intend to use the product for a long time, unplug the power cable from the product. Covering dust can cause a fire, or insulation deterioration can cause electric leakage, electric shock or fire.



- Apparatus shall not be exposed to dripping or splashing and no objects filled with liquids, such as vases, shall be placed on the apparatus.

⚠ CAUTION

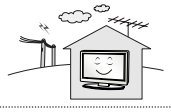

- Install the product where no radio wave occurs.

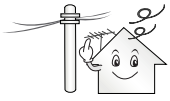

- There should be enough distance between an outside antenna and power lines to keep the former from touching the latter even when the antenna falls. This may cause an electric shock.



- Do not install the product on places such as unstable shelves or inclined surfaces. Also avoid places where there is vibration or where the product cannot be fully supported. Otherwise, the product may fall or flip over, which may cause injury or damage to the product.

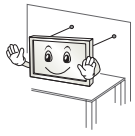

- If you install the TV on a stand, you need to take actions to prevent the product from overturning. Otherwise, the product may fall over, which may cause injury.

- If you intend to mount the product to a wall, attach VESA standard mounting interface (optional parts) to the back of the product. When you install the set to use the wall mounting bracket (optional parts), fix it carefully so as not to drop.
- Only use the attachments / accessories specified by the manufacturer.



- When installing the antenna, consult a qualified service man. This may create a fire hazard or an electric shock hazard.

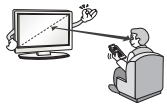

- We recommend that you maintain a distance of at least 2 to 7 times the diagonal screen size when watching TV. If you watch TV for a long period of time, this may cause blurred vision.

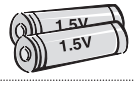

- Only use the specified type of battery. This could cause damage to the remote control.

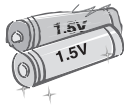

- Do not mix new batteries with old batteries. This may cause the batteries to overheat and leak.



- Make sure there are no objects between the remote control and its sensor.



- Signal from the remote control may be disturbed by sun light or other strong light. In this case, darken the room.



- When connecting external devices such as video game consoles, make sure the connecting cables are long enough. Otherwise, the product may fall over, which may cause injury or damage the product.



- Do not turn the product On/Off by plugging-in or unplugging the power plug to the wall outlet. (Do not use the power plug for switch.) It may cause mechanical failure or could give an electric shock.



- Please follow the installation instructions below to prevent the product from overheating.
  - The distance between the product and the wall should be more than 10 cm.
  - Do not install the product in a place with no ventilation (e.g., on a bookshelf or in a cupboard).
  - Do not install the product on a carpet or cushion.
  - Make sure the air vent is not blocked by a tablecloth or curtain.

  Otherwise, this may result in fire.

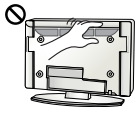

- Take care not to touch the ventilation openings when watching the TV for long periods as the ventilation openings may become hot. This does not affect the operation or performance of the product.

ENGLISH

- Periodically examine the cord of your appliance, and if its appearance indicates damage or deterioration, unplug it, discontinue use of the appliance, and have the cord replaced with an exact replacement part by an authorized servicer.



- Prevent dust collecting on the power plug pins or outlet. This may cause a fire hazard.

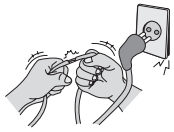

- Protect the power cord from physical or mechanical abuse, such as being twisted, kinked, pinched, closed in a door, or walked upon. Pay particular attention to plugs, wall outlets, and the point where the cord exits the appliance.



- Do not press strongly upon the panel with a hand or sharp object such as nail, pencil or pen, or make a scratch on it.



- Avoid touching the screen or holding your finger(s) against it for long periods of time. Doing so may produce some temporary distortion effects on the screen.



- When cleaning the product and its components, unplug the power first and wipe it with a soft cloth. Applying excessive force may cause scratches or discolouration. Do not spray with water or wipe with a wet cloth. Never use glass cleaner, car or industrial shiner, abrasives or wax, benzene, alcohol etc., which can damage the product and its panel. Otherwise, this may result in fire, electric shock or product damage (deformation, corrosion or breakage).

- As long as this unit is connected to the AC wall outlet, it is not disconnected from the AC power source even if you turn off this unit by SWITCH.

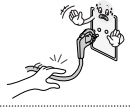

- When unplugging the cable, grab the plug and unplug it. If the wires inside the power cable are disconnected, this may cause fire.



- When moving the product, make sure you turn the power off first. Then, unplug the power cables, antenna cables and all connecting cables. The TV set or power cord may be damaged, which may create a fire hazard or cause electric shock.



- When moving or unpacking the product, work in pairs because the product is heavy. Otherwise, this may result in injury.



- Contact the service center once a year to clean the internal parts of the product. Accumulated dust can cause mechanical failure.



- Refer all servicing to qualified service personnel. Servicing is required when the apparatus has been damaged in any way, such as power supply cord or plug is damaged, liquid has been spilled or objects have fallen into the apparatus, the apparatus has been exposed to rain or moisture, does not operate normally, or has been dropped.



- If the product feels cold to the touch, there may be a small "flicker" when it is turned on. This is normal, there is nothing wrong with product.



- The panel is a high technology display product with resolution of two million to six million pixels. You may see tiny black dots and/or brightly coloured dots (red, blue or green) at a size of 1 ppm on the panel. This does not indicate a malfunction and does not affect the performance and reliability of the product. This phenomenon also occurs in third-party products and is not subject to exchange or refund.



- You may find different brightness and colour of the panel depending on your viewing position(left/right/top/down). This phenomenon occurs due to the characteristic of the panel. It is not related with the product performance, and it is not malfunction.

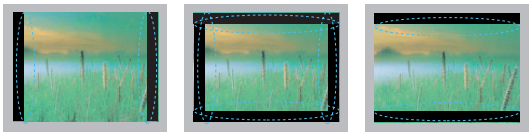

- Displaying a still image (e.g., broadcasting channel logo, on-screen menu, scene from a video game) for a prolonged time may cause damage to the screen, resulting in retention of the image, which is known as image sticking. The warranty does not cover the product for image sticking. Avoid displaying a fixed image on your television's screen for a prolonged period (2 or more hours for LCD, 1 or more hours for Plasma). Also, if you watch the TV at a ratio of 4:3 for a long time, image sticking may occur on the borders of the panel. This phenomenon also occurs in third-party products and is not subject to exchange or refund.

- **Generated Sound**
  "Cracking" noise: A cracking noise that occurs when watching or turning off the TV is generated by plastic thermal contraction due to tempera-ture and humidity. This noise is common for products where thermal deformation is required. Electrical circuit humming/panel buzzing: A low level noise is generated from a high-speed switching circuit, which supplies a large amount of current to operate a product. It varies depending on the product. This generated sound does not affect the performance and reliability of the product.

ENGLISH

LICENSES

Supported licenses may differ by model. For more information about licenses, visit 'www.lg.com'.

Manufactured under license from Dolby Laboratories. "Dolby" and the double-D symbol are trademarks of Dolby Laboratories.

The terms HDMI and HDMI High-Definition Multimedia Interface, and the HDMI logo are trademarks or registered trademarks of HDMI Licensing LLC in the United States and other countries.

ABOUT DIVX VIDEO: DivX® is a digital video format created by DivX, LLC, a subsidiary of Rovi Corporation. This is an official DivX Certified® device that plays DivX video. Visit divx.com for more information and software tools to convert your files into DivX video.

ABOUT DIVX VIDEO-ON-DEMAND: This DivX Certified® device must be registered in order to play purchased DivX Video-on-Demand (VOD) movies. To obtain your registration code, locate the DivX VOD section in your device setup menu. Go to vod.divx.com for more information on how to complete your registration.

"DivX Certified® to play DivX® video up to HD 1080p, including premium content."

"DivX®, DivX Certified® and associated logos are trademarks of Rovi Corporation or its subsidiaries and are used under license."

"Covered by one or more of the following U.S. patents:
7,295,673; 7,460,668; 7,515,710; 7,519,274"

Manufactured under license under U.S. Patent Nos: 5,956,674; 5,974,380; 6,487,535 & other U.S. and worldwide patents issued & pending. DTS, the Symbol & DTS and the Symbol together are registered trademarks & DTS 2.0+Digital Out is a trademark of DTS, Inc. Product includes software. © DTS, Inc. All Rights Reserved.

ENGLISH

OPEN SOURCE SOFTWARE NOTICE

To obtain the source code under GPL, LGPL, MPL and other open source licenses, that is contained in this product, please visit 'http://opensource.lge.com'.

In addition to the source code, all referred license terms, warranty disclaimers and copyright notices are available for download.

LG Electronics will also provide open source code to you on CD-ROM for a charge covering the cost of performing such distribution (such as the cost of media, shipping and handling) upon email request to 'opensource@lge.com'. This offer is valid for three (3) years from the date on which you purchased the product.

TABLE OF CONTENTS

2 SAFETY INSTRUCTIONS

5 LICENSES

5 OPEN SOURCE SOFTWARE NOTICE

6 TABLE OF CONTENTS

7 INSTALLATION PROCEDURE

7 ASSEMBLING AND PREPARING

7 Unpacking
9 Optional Extras
10 Parts and Buttons
11 Lifting and moving the TV
12 Setting up the TV
12 - Attaching the stand
13 - Mounting on a table
14 - Tidying cables
15 - Mounting on a wall

16 MAKING CONNECTIONS

16 Connecting to an antenna or cable
17 Connecting to a HD receiver, DVD Player, or VCR
17 - HDMI Connection
18 - DVI to HDMI Connection
19 - Connecting to a mobile phone
20 - Component Connection
21 - Composite Connection
22 Connecting to a PC
22 - HDMI Connection or DVI to HDMI Connection
24 Connecting to an Audio System
24 - Digital Optical Audio Connection
25 Connecting Headphones
25 Connecting a USB Drive

26 REMOTE CONTROL

28 USING THE USER GUIDE

29 SPECIFICATIONS

30 EXTERNAL CONTROL DEVICE SETUP

31 MAINTENANCE

31 Cleaning Your TV
31 - Screen, frame, cabinet and stand
31 - Power cord

31 TROUBLESHOOTING

ENGLISH

NOTE

- Image shown may differ from your TV.
- Your TV's OSD (On Screen Display) may differ slightly from that shown in this manual.
- The available menus and options may differ from the input source or product model that you are using.
- New features may be added to this TV in the future.

INSTALLATION PROCEDURE

1 Open the package and make sure all the accessories are included.

2 Attach the stand to the TV set.

3 Connect an external device to the TV set.

4 Make sure the network connection is available.
You can use the TV network functions only when the network connection is made.

ASSEMBLING AND PREPARING

Unpacking

Check your product box for the following items. If there are any missing accessories, contact the local dealer where you purchased your product. The illustrations in this manual may differ from the actual product and item.

CAUTION
- Do not use any unapproved items to ensure the safety and product life span.
- Any damages or injuries by using unapproved items are not covered by the warranty.
- In case of some model, the thin film on screen is a part of TV, So don't take it off.

NOTE
- The items supplied with your product may vary depending on the model.
- Product specifications or contents of this manual may be changed without prior notice due to upgrade of product functions.
- For an optimal connection, HDMI cables and USB devices should have bezels less than 10 mm thick and 18 mm width.
- Use an extension cable that supports USB 2.0 if the USB cable or USB memory stick does not fit into your TV's USB port.

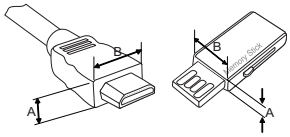

*A ≤ 10 mm
*B ≤ 18 mm

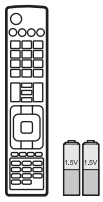

Remote Control, Batteries (AAA)
(See p. 26)

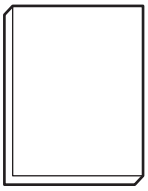

Owner's Manual



Power Cord

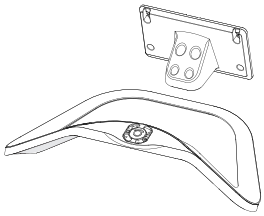

Stand Body, Stand Base
(See p. 12)

(For 42LN6150)



Stand Screws
8 EA, M4 x 14
(See p. 12)

(For 47LN6150)



Cable Holder
(See p. 14)

(For 42/47LN6150)



Bracket Screw
2 EA, M4 x 8
(See p. 13)

(For 42/47LN6150)



Bracket Screw
2 EA, P4 x 8
(See p. 13)

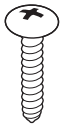

Desk-mount Screw
2 EA
(See p. 13)

(For 42/47LN6150)



Desk-mount Cable
2 EA
(See p. 13)

Optional Extras

Optional extras can be changed or modified for quality improvement without any notification.
Contact your dealer for buying these items.
These devices only work with certain models.
The model name or design may be changed manufacturer's circumstances or policies.

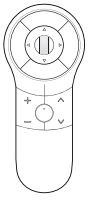

AN-MR400
Magic Remote

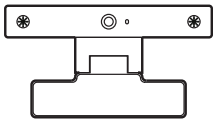

AN-VC4**
Video Call Camera

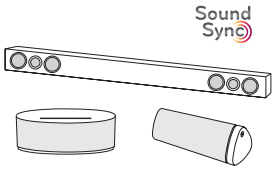

LG Audio Device



AN-WF100
Wireless LAN for Broadband/
DLNA Adaptor

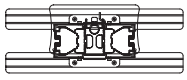

Wall mount bracket
LSW130B

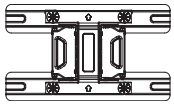

Wall mount bracket
LSW230B

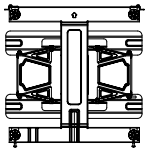

Wall mount bracket
LSW430B



AN-BL***
Wireless IR Blaster
(Depending on model)

ENGLISH

Parts and Buttons

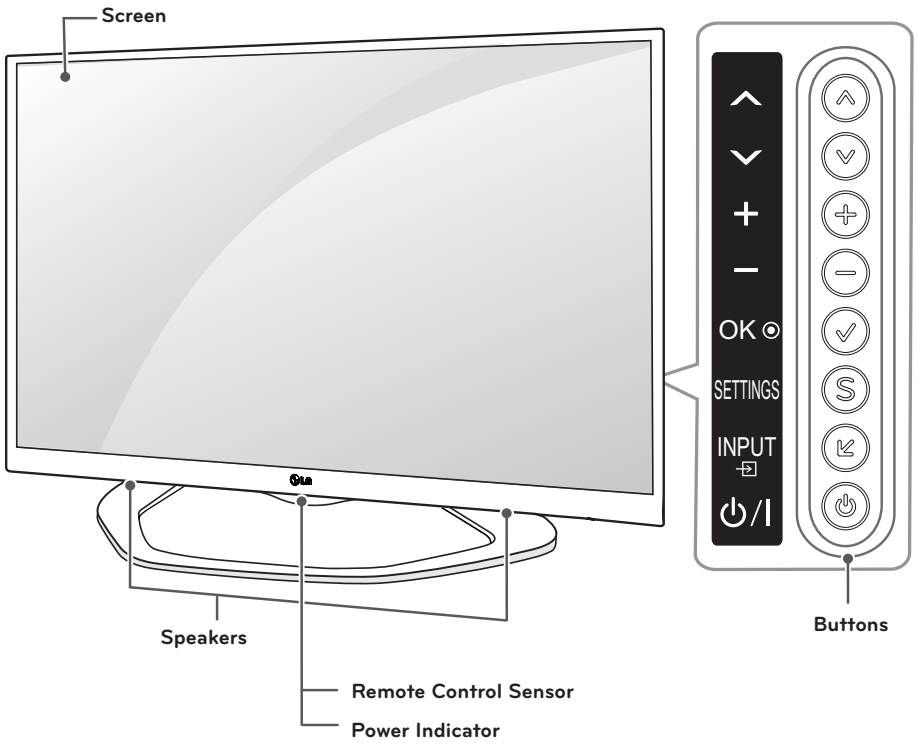

Button	Description
/ (^ / v)	Scrolls through the saved channels.
/ (+ / -)	Adjusts the volume level.
(OK ⊙)	Selects the highlighted menu option or confirms an input.
(SETTINGS)	Accesses the main menus, or saves your input and exits the menus.
(INPUT ⊡)	Changes the input source.
(/ I)	Turns the power on or off.

Lifting and moving the TV

When moving or lifting the TV, read the following to prevent the TV from being scratched or damaged and for safe transportation regardless of its type and size.

CAUTION

- Avoid touching the screen at all times, as this may result in damage to the screen.

- It is recommended to move the TV in the box or packing material that the TV originally came in.
- Before moving or lifting the TV, disconnect the power cord and all cables.
- When holding the TV, the screen should face away from you to avoid damage.



- Hold the top and bottom of the TV frame firmly. Make sure not to hold the transparent part, speaker, or speaker grill area.

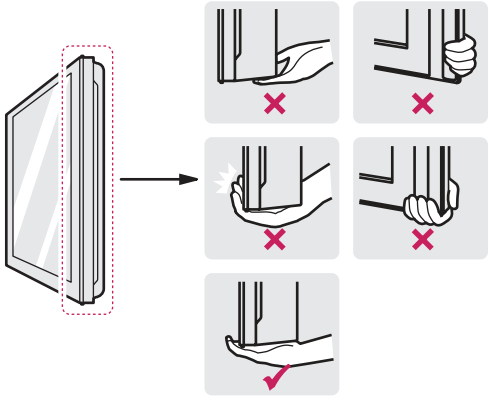

- When transporting a large TV, there should be at least 2 people.
- When transporting the TV by hand, hold the TV as shown in the following illustration.

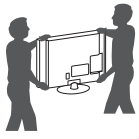

- When transporting the TV, do not expose the TV to jolts or excessive vibration.
- When transporting the TV, keep the TV upright, never turn the TV on its side or tilt towards the left or right.

ENGLISH

Setting up the TV

You can mount your TV to a wall or attach the stand if you wish to place the TV on an entertainment center or other furniture.

Attaching the stand

If you are not mounting the TV to a wall, use the following instructions to attach the stand.

CAUTION

- When attaching the stand to the TV set, place the screen facing down on a cushioned table or flat surface to protect the screen from scratches.
- Make sure that the screws are fastened tightly. (If they are not fastened securely enough, the TV may tilt forward after being installed.)
- Do not tighten the screws with too much force; otherwise they may be damaged and come loose later.

NOTE

- Remove the stand before installing the TV on a wall mount by performing the stand attachment in reverse.

1

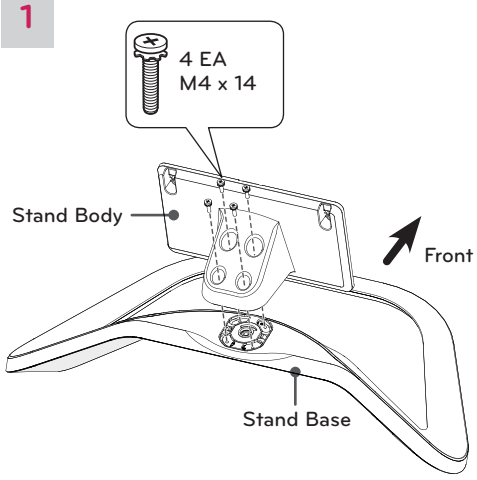

2

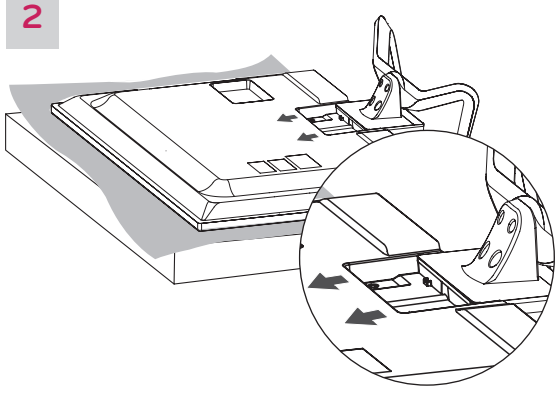

3

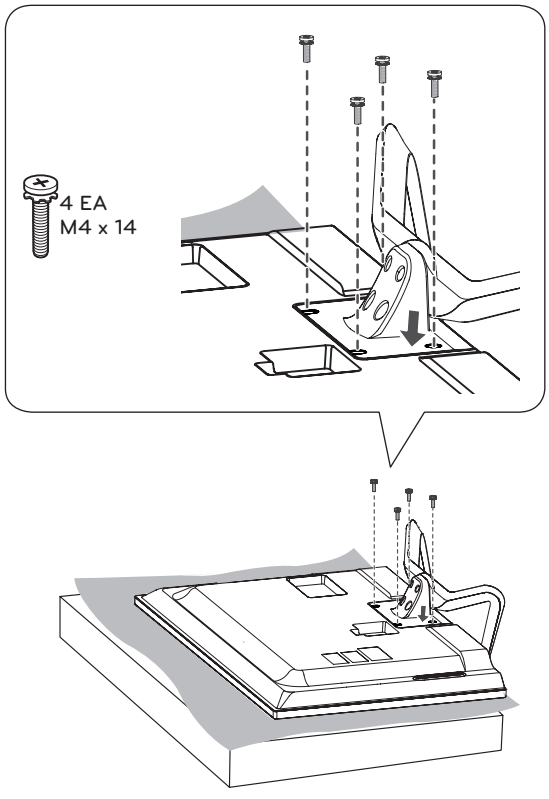

ENGLISH

Mounting on a table

1 Lift and tilt the TV into its upright position on a table.
- Leave a 10 cm (minimum) space from the wall for proper ventilation.

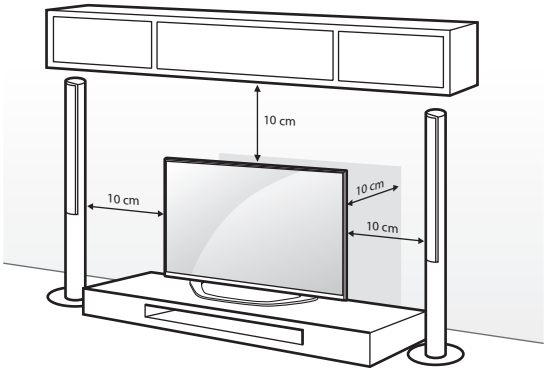

2 Connect the power cord to a wall outlet.

CAUTION
- Do not place the TV near or on sources of heat, as this may result in fire or other damage.

Adjusting the angle of the TV to suit view

Swivel 15 degrees to the left or right and adjust the angle of the TV to suit your view.

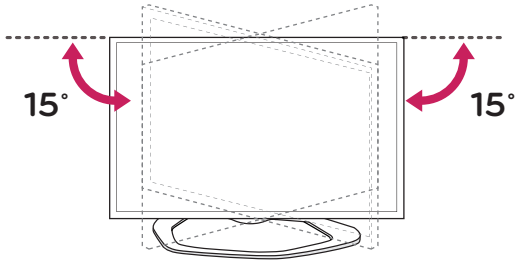

NOTE
- When adjusting the angle of the TV, watch out for your fingers.
  - » Personal injury may occur if hands or fingers are pinched. If the product is tilted too much, it may fall, causing damage or injury.

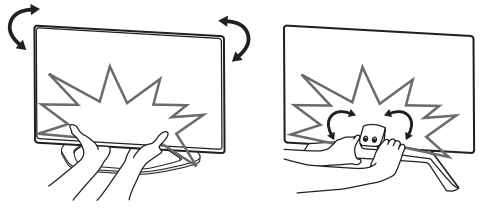

Securing the TV to a table

(For 42/47LN6150)

Fix the TV to a table to prevent from tilting forward, damage, and potential injury.

1 Connect the Desk-mount Cables to the Stand Base using the Bracket Screws.

2 Fix the Desk-mount Cables to a table using the Desk-mount Screws.

3 Once the TV is fixed, move the table close to the wall. Children may go in, causing injuries.

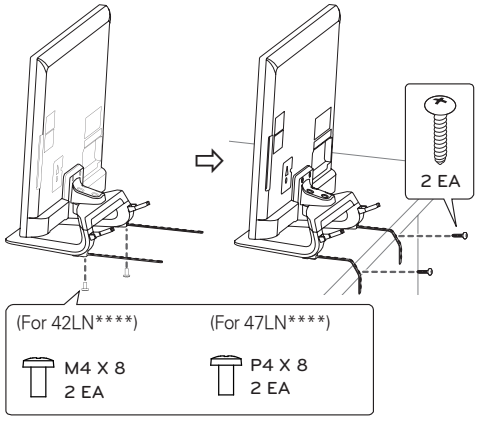

WARNING
- To prevent TV from falling over, the TV should be securely attached to the floor/wall per installation instructions. Tipping, shaking, or rocking the TV may cause injury.

ENGLISH

Securing the TV to a wall (optional)

(Depending on model)

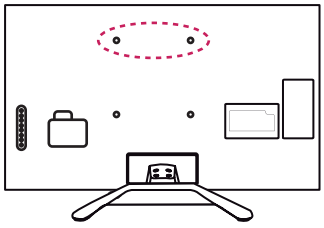

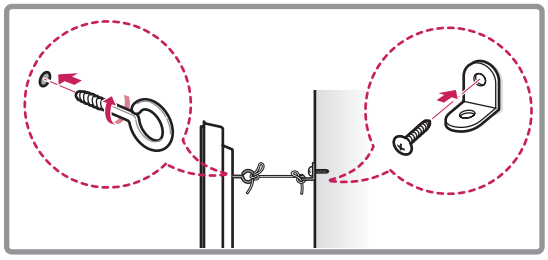

1 Insert and tighten the eye-bolts, or TV brackets and bolts on the back of the TV.
- If there are bolts inserted at the eye-bolts position, remove the bolts first.

2 Mount the wall brackets with the bolts to the wall.
Match the location of the wall bracket and the eye-bolts on the rear of the TV.

3 Connect the eye-bolts and wall brackets tightly with a sturdy rope.
Make sure to keep the rope horizontal with the flat surface.

CAUTION
- Make sure that children do not climb on or hang on the TV.

NOTE
- Use a platform or cabinet that is strong and large enough to support the TV securely.
- Brackets, bolts and ropes are optional. You can obtain additional accessories from your local dealer.

Using the Kensington security system (optional)

(Depending on model)
The Kensington security system connector is located at the rear of the TV.
For more information of installation and using, refer to the manual provided with the Kensington security system or visit http://www.kensington.com.

Connect the Kensington security system cable between the TV and a table.

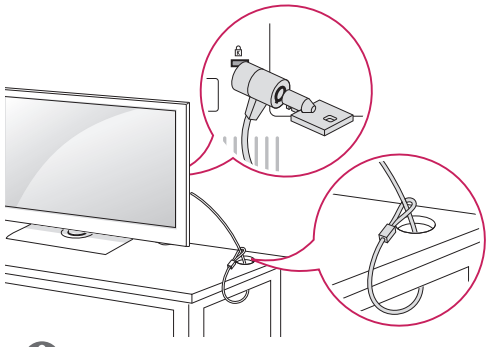

NOTE
- The Kensington security system is optional. You can obtain additional accessories from your local dealer.

Tidying cables

1 Gather and bind the cables with the cable management.

2 Gather and bind the cables with the cable holder on the back of the TV.

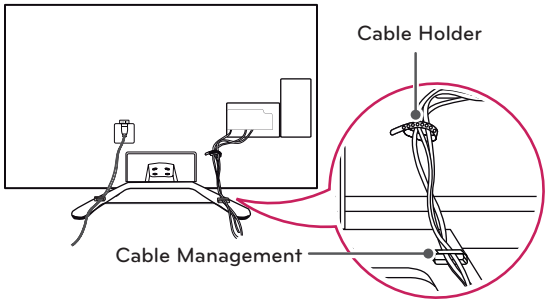

CAUTION
- Do not move the TV by holding the cable holder and cable management, as the cable holders may break, and injuries and damage to the TV may occur.

ENGLISH

Mounting on a wall

An optional wall mount can be used with your LG Television. Consult with your local dealer for a wall mount that supports the VESA standard used by your TV model. Carefully attach the wall mount bracket at the rear of the TV. Install the wall mount bracket on a solid wall perpendicular to the floor. If you are attaching the TV to other building materials, please contact qualified personnel to install the wall mount. Detailed instructions will be included with the wall mount. We recommend that you use an LG brand wall mount.

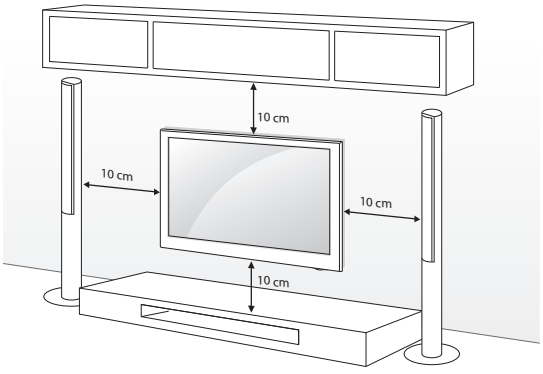

Make sure to use screws and wall mounts that meet the VESA standard. Standard dimensions for the wall mount kits are described in the following table.

Model	42LN6150	47LN6150
VESA (A x B) 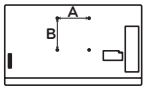	200 x 200	400 x 400
Standard screw	M6	M6
Number of screws	4	4
Wall mount bracket (optional)	LSW230B MSW240	LSW430B MSW240

Wall mount bracket (optional)	
LSW230B	
LSW430B	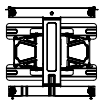
MSW240	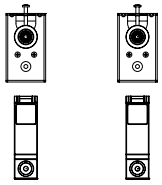

CAUTION

- Disconnect the power first, and then move or install the TV. Otherwise electric shock may occur.
- If you install the TV on a ceiling or slanted wall, it may fall and result in severe injury.
  Use an authorized LG wall mount and contact the local dealer or qualified personnel.
- Do not over tighten the screws as this may cause damage to the TV and void your warranty.
- Use the screws and wall mounts that meet the VESA standard. Any damages or injuries by misuse or using an improper accessory are not covered by the warranty.

NOTE

- Use the screws that are listed on the VESA standard screw specifications.
- The wall mount kit includes an installation manual and necessary parts.
- The wall mount bracket is optional. You can obtain additional accessories from your local dealer.
- The length of screws may differ depending on the wall mount. Make sure to use the proper length.
- For more information, refer to the manual supplied with the wall mount.

ENGLISH

MAKING CONNECTIONS

You can connect various external devices to the TV. Supported external devices are: HD receivers, DVD players, VCRs, audio systems, USB storage devices, PC, gaming devices, and other external devices. For more information on external device's connection, refer to the manual provided with each device.

NOTE

- If you record a TV program on a DVD recorder or VCR, make sure to connect the TV signal input cable to the TV through a DVD recorder or VCR. For more information of recording, refer to the manual provided with the connected device.
- The external device connections shown may differ slightly from illustrations in this manual.
- Connect external devices to the TV regardless of the order of the TV port.
- If you connect a gaming device to the TV, use the cable supplied with the gaming device.
- Refer to the external equipment's manual for operating instructions.

Connecting to an antenna or cable

Connect an antenna, cable, or cable box to watch TV while referring to the following. The illustrations may differ from the actual items and a RF cable is optional.

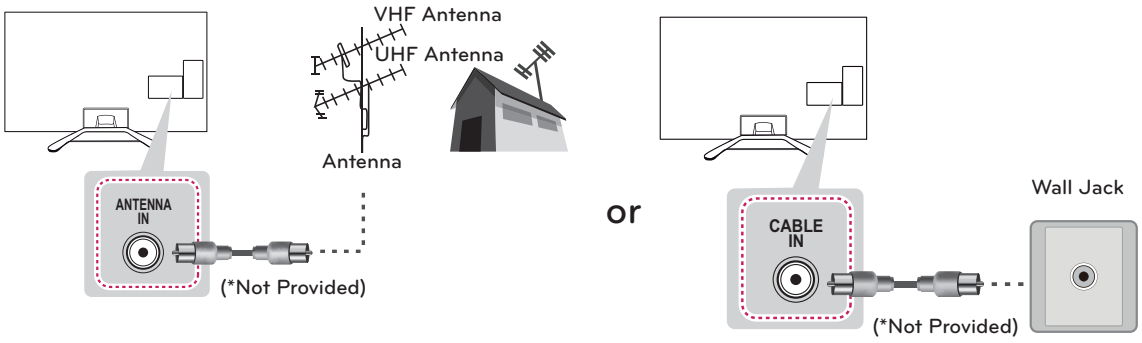

NOTE

- To improve the picture quality in a poor signal area, please purchase a signal amplifier and install properly.
- Use a signal splitter to use more than 2 TVs.
- If the antenna is not installed properly, contact your dealer for assistance.
- DTV Audio Supported Codec: MPEG, Dolby Digital, HE-AAC.

ENGLISH

Connecting to a HD receiver, DVD Player, or VCR

Connect a HD receiver, DVD Player, or VCR to the TV and select an appropriate input mode.

HDMI Connection

HDMI is the best way to connect a device.

Transmits the digital video and audio signals from an external device to the TV. Connect the external device and the TV with the HDMI cable as shown in the following illustration.

NOTE

- Use the latest High Speed HDMI™ Cable that supports CEC (Customer Electronics Control) function.
- High Speed HDMI™ Cables are tested to carry an HD signal up to 1080p and higher.
- HDMI Audio Supported Format: Dolby Digital, PCM (Up to 192 kHz, 32 kHz / 44.1 kHz / 48 kHz / 88 kHz / 96 kHz / 176 kHz / 192 kHz), DTS.

Choose any HDMI input port to connect.
It does not matter which port you use.

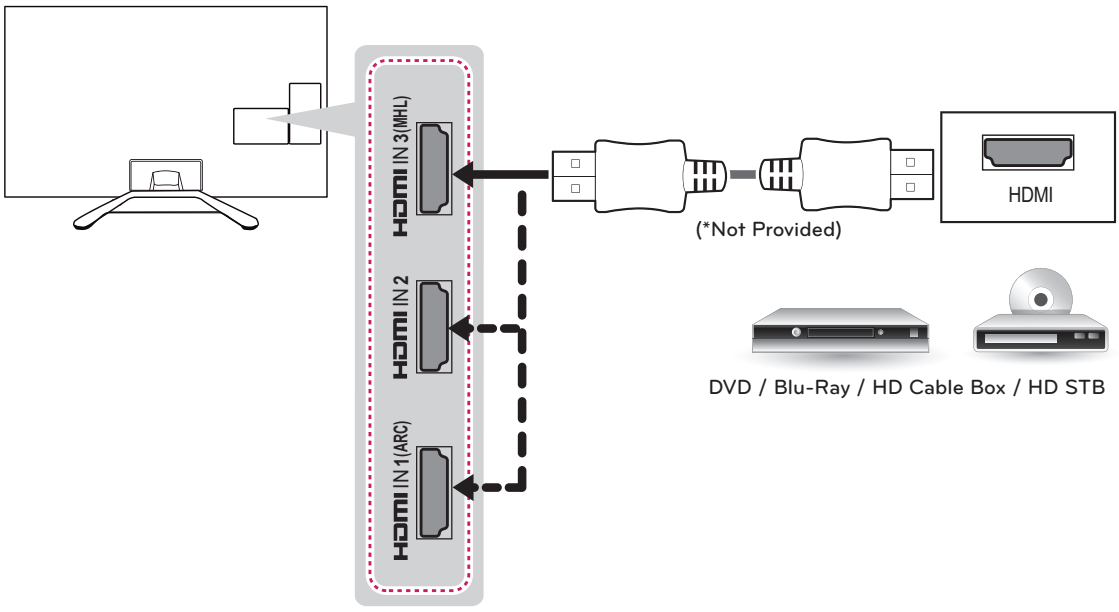

ARC (Audio Return Channel)

- When connected with a high-speed HDMI cable, digital audio can be sent to a compactible device without an additional optical audio cable.
- ARC is only supported on the HDMI input 1 (ARC) port. An external audio device that supports ARC should be connected to HDMI 1 if you wish to use ARC

ENGLISH

DVI to HDMI Connection

Transmits the digital video signal from an external device to the TV. Connect the external device and the TV with the DVI-HDMI cable as shown in the following illustration. To transmit an audio signal, connect an audio cable.

NOTE

- When using the HDMI/DVI cable, Single link is only supported.

Choose any HDMI input port to connect.
It does not matter which port you use.

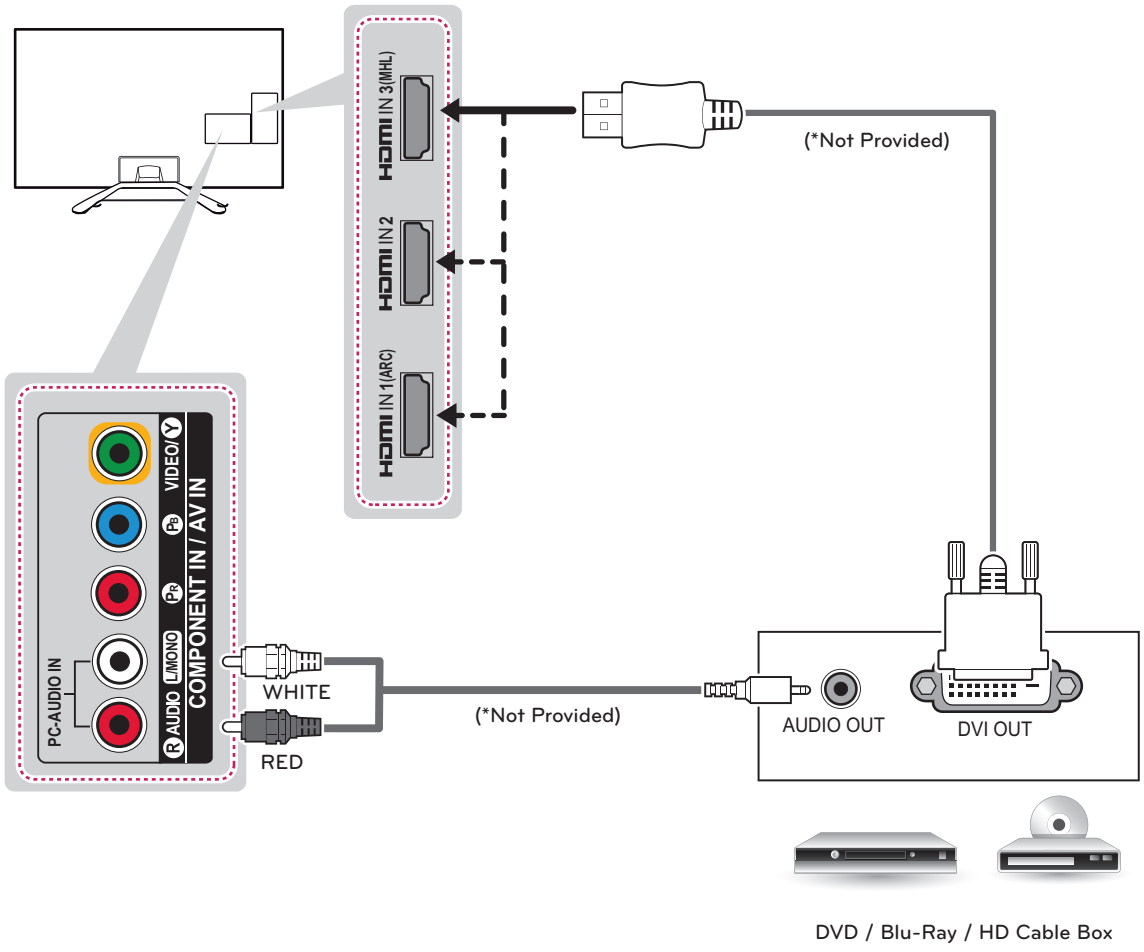

Connecting to a mobile phone

Mobile High-definition Link (MHL) is an interface for transmitting digital audiovisual signals from mobile phones to television sets.

NOTE

- Connect the mobile phone to the HDMI IN 3 (MHL) port to view the phone screen on the TV.
- This only works for the MHL-enabled phone.
- With some MHL supporting mobile phones, you can use the TV remote to control the phone.
- An MHL passive cable is needed to connect the TV and a mobile phone.
- Remove the MHL cable from the TV when:
  - the MHL function is disabled.
  - your mobile device is fully charged in standby mode.

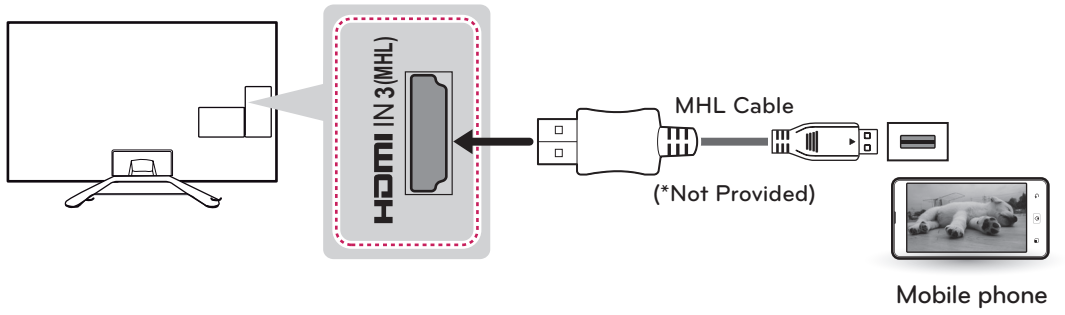

Component Connection

Transmits analog video and audio signals from an external device to the TV. Connect the external device and the TV with a component cable as shown in the following illustration.

NOTE

- If cables are installed incorrectly, it could cause the image to display in black and white or with distorted color.
- **Check to ensure the cables are matched with the corresponding color connection.**

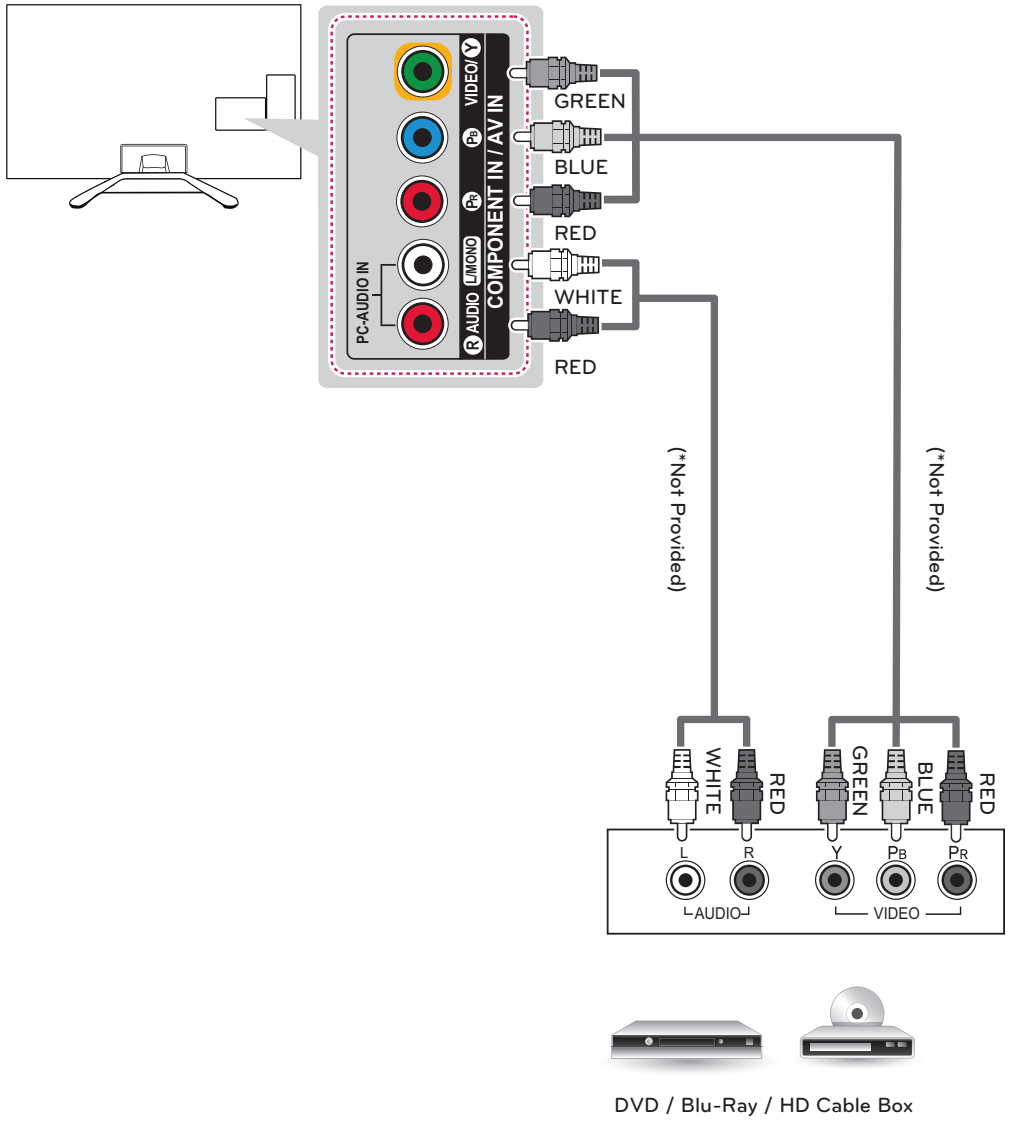

Composite Connection

Transmits analog video and audio signals from an external device to the TV. Connect the external device and the TV with the composite cable as shown in the following illustration.

NOTE

- Check to ensure the cables are matched with the corresponding color connection.

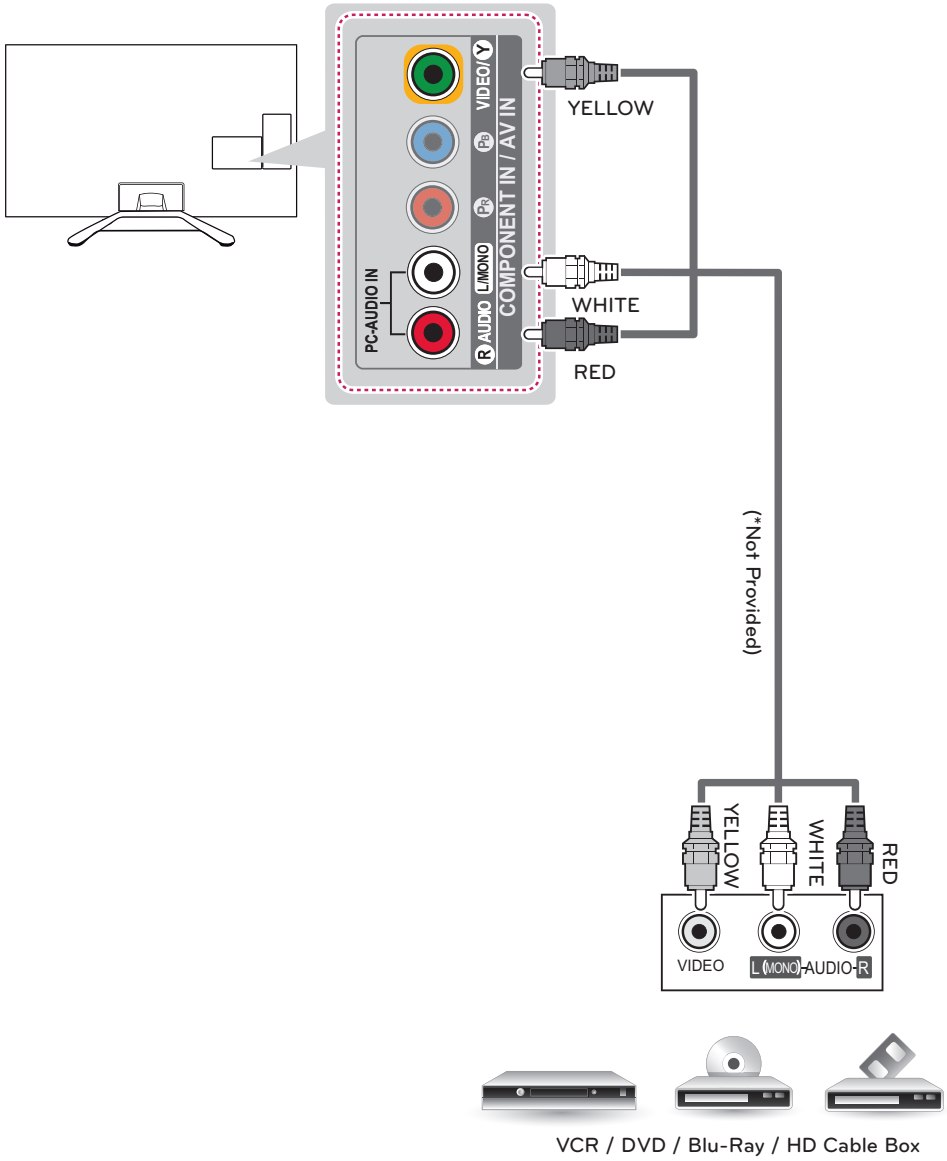

ENGLISH

Connecting to a PC

NOTE

- It is recommended to use an HDMI connection for the best image quality.
- Depending on the graphics card, DOS mode video may not work if a HDMI to DVI Cable is in use.
- In PC mode, there may be noise associated with the resolution, vertical pattern, contrast or brightness. If noise is present, change the PC output to another resolution, change the refresh rate to another rate or adjust the brightness and contrast on the PICTURE menu until the picture is clear.
- The synchronization input form for Horizontal and Vertical frequencies is separate.
- Depending on the graphics card, some resolution settings may not allow the image to be positioned on the screen properly.
- If you are using DVI out from a PC, you have to connect analog audio separately. Refer to the instructions on the next page.
- When using the HDMI/DVI cable, Single link is only supported.

HDMI Connection or DVI to HDMI Connection

Choose method A or B to make connection.

Method A: HDMI Connection

Choose any HDMI input port to connect.
It does not matter which port you use.

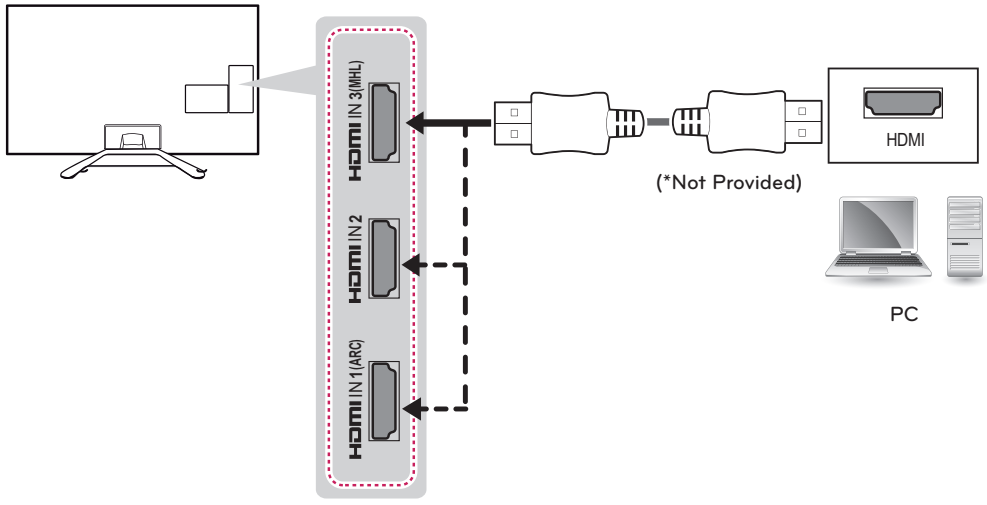

ENGLISH

Method B: DVI to HDMI Connection

Choose any HDMI input port to connect.
It does not matter which port you use.

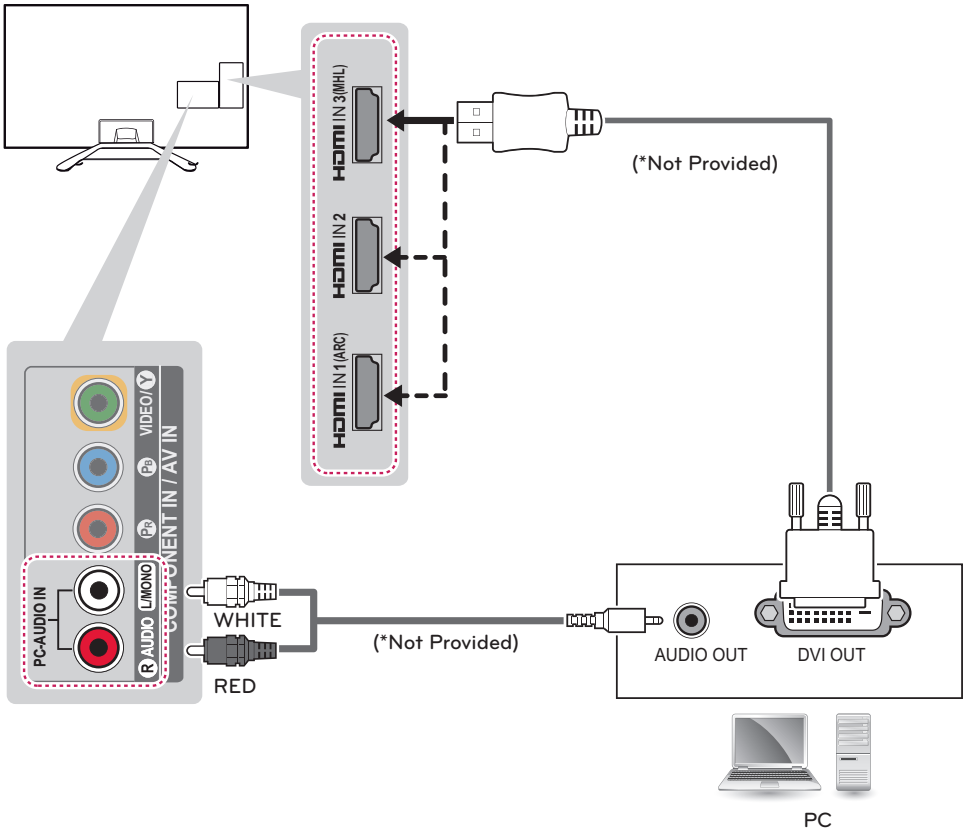

ENGLISH

Connecting to an Audio System

You may use an optional external audio system instead of the built-in speaker.

Digital Optical Audio Connection

Transmits a digital audio signal from the TV to an external device. Connect the external device and the TV with the optical audio cable as shown in the following illustration.

NOTE

- Do not look into the optical output port. Looking at the laser beam may damage your vision.
- Audio with ACP (Audio Copy Protection) function may block digital audio output.

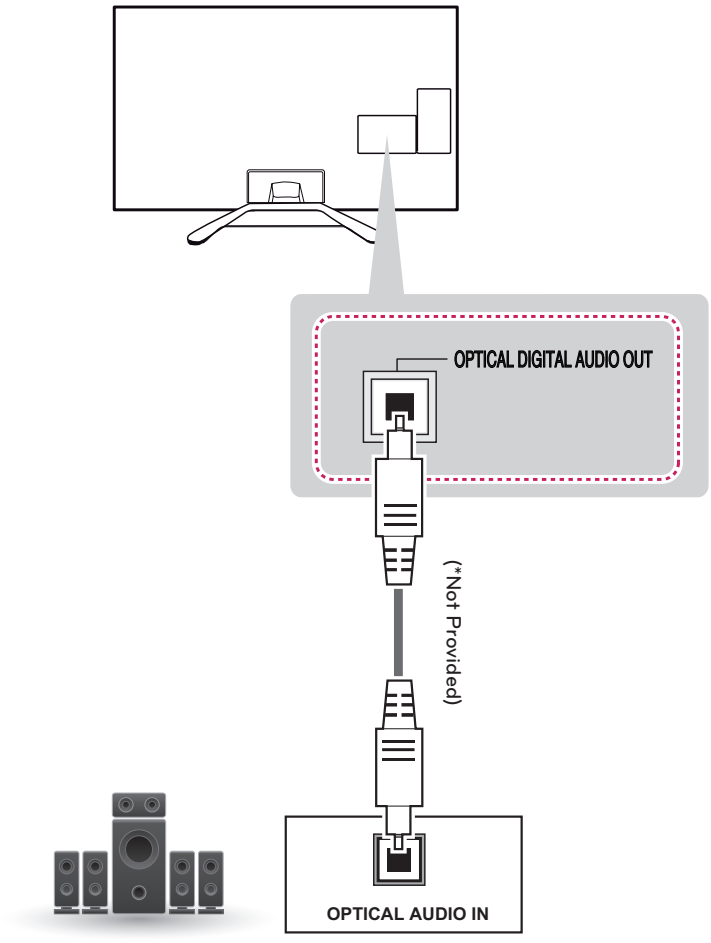

Digital Audio System

Connecting Headphones

You listen to the sound using headphones.

NOTE

- AUDIO menu options are disabled when headphones are connected.
- When changing AV MODE with headphones connected, the change is applied to video but not to audio.
- Optical Digital Audio Out is not available when headphones are connected.
- Headphone impedance: 16 Ω
- Max audio output: 10 mW to 15 mW
- Headphone jack size: 0.35 cm

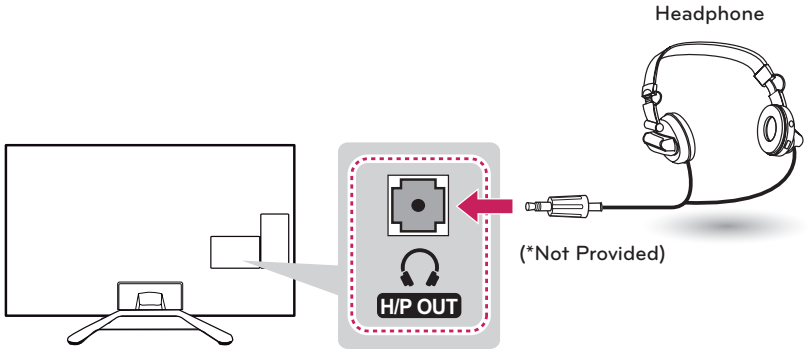

Connecting a USB Drive

Connect a USB storage device such as a USB flash memory, external hard drive, or a USB memory card reader to the TV and access the Smart Share menu to use various multimedia files.

NOTE

- Some USB Hubs may not work. If a USB device connected using a USB Hub is not detected, connect it to the USB port on the TV directly.

Choose any USB input port to connect.
It does not matter which port you use.

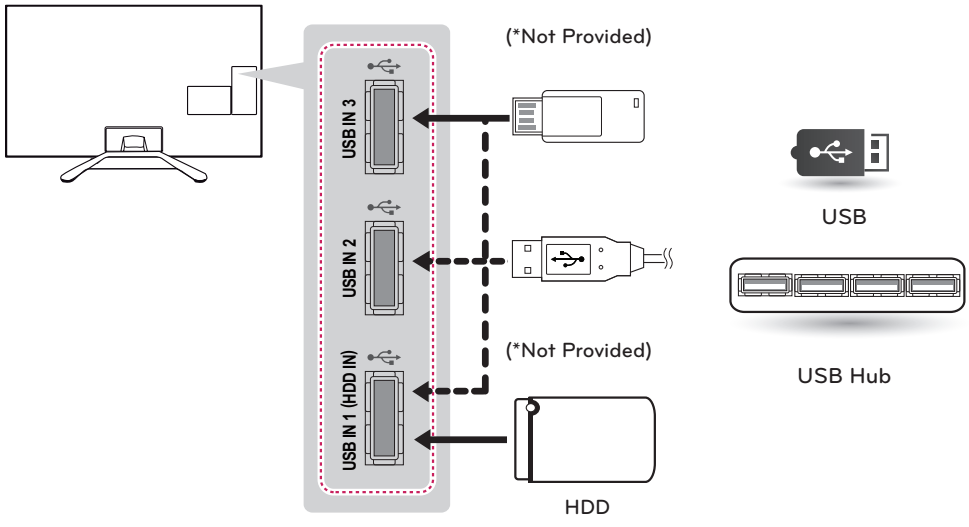

ENGLISH

REMOTE CONTROL

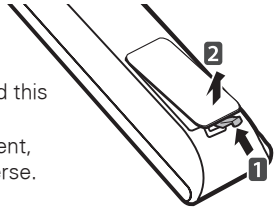

The descriptions in this manual are based on the buttons on the remote control. Please read this manual carefully and use the TV correctly. To install batteries, open the battery cover, replace batteries (1.5 V AAA) matching the ⊕ and ⊖ ends to the label inside the compartment, and close the battery cover. To remove the batteries, perform the installation actions in reverse.

CAUTION

- Do not mix old and new batteries, as this may damage the remote control.
- In Analogue TV and some countries, some remote control buttons may not work.

This remote uses infrared light. When in use, it should be pointed in the direction of the TV's remote sensor.



(POWER)
Turns the TV on or off.

(User Guide)
Sees user-guide.

RATIO
Resizes an image.

INPUT
Changes the input source. Turns the TV on if it is off.

TV/RAD
Toggles between Radio, TV, CATV and DTV.

Number button
Enters numbers.

LIST
Accesses the saved channel list.

Q.VIEW
Tunes to the last channel viewed.

+ −
Adjusts the volume level.

FAV
Accesses your favorite channel list.

SETTINGS
Accesses the main menu.

MUTE
Mutes all sounds.

P
Scrolls through the saved channels.

PAGE
Moves to the previous or next screen.

ENGLISH

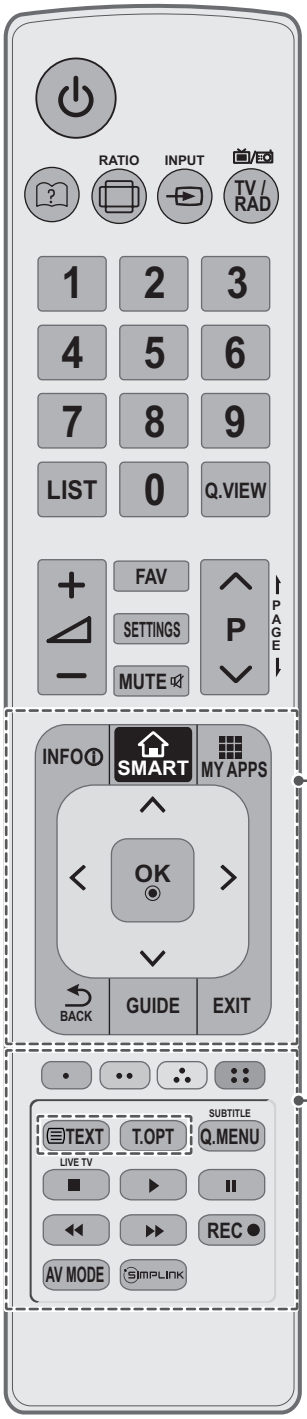

INFO ⓘ
Views the information of the current program and screen.

SMART
Accesses the Smart Home menu.

MY APPS
Shows the list of Apps.

Navigation buttons (up/down/left/right)
Scrolls through menus or options.

OK
Selects menus or options and confirms your input.

BACK
Returns to the previous level.

GUIDE
Displays the program event according to time scheduler.

EXIT
Clears all on-screen displays and returns to TV viewing.

Color buttons
These access special functions in some menus.
(●: Red, ●●: Green, ●●●: Yellow, ●●●●: Blue)

Teletext buttons (TEXT, T.OPT)
These buttons are used for teletext.

Q. MENU
Accesses the quick menu.

SUBTITLE
Recalls your preferred subtitle in digital mode.

Control buttons (■, ▶, ❚❚, ◀◀, ▶▶)
Controls the SIMPLINK compatible devices (USB,SIMPLINK).

LIVE TV
Return to LIVE TV.

REC ●
Start to record and display record menu.

AV MODE
Selects an AV mode.

SIMPLINK
Accesses the AV devices connected to the TV;
Opens the SIMPLINK menu.

ENGLISH

USING THE USER GUIDE

User Guide allows you to easily access detailed TV information.

1 Press **SMART** button to access the Smart Home menu.

2 Select **User Guide** and press the **OK** button.

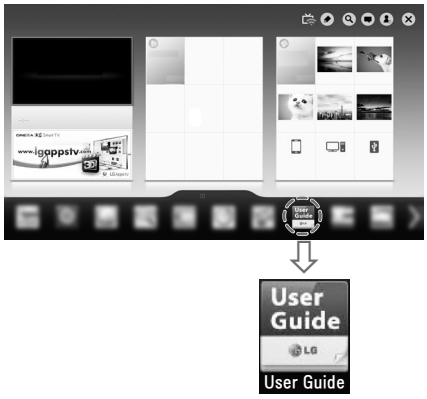

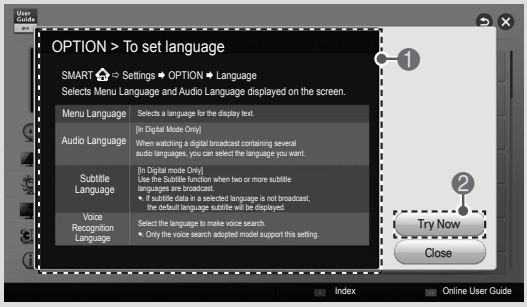

❶	Shows the description of the selected menu. You can use navigation button ∧/∨ to move between pages.
❷	Moves to the selected menu directly from the User Guide.

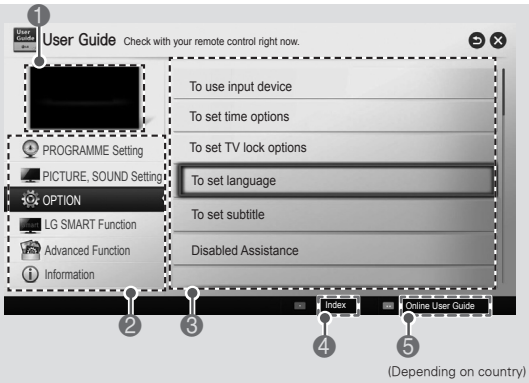

(Depending on country)

❶	Shows the video you were watching.
❷	Guide categories.
❸	List of topics in the current category. You can use navigation button ∧/∨ to move between pages.
❹	An index of key words present in the User Guide.
❺	Provides the detailed information on the functions of LG Smart TV when the Internet is connected. (It may not be available depending on the country/ language.)

ENGLISH

SPECIFICATIONS

Product specifications may be changed without prior notice due to upgrade of product functions.

		Digital TV	Analogue TV
Hong-Kong	Television System	DTMB	PAL D/K, PAL I, NTSC M
	Programme Coverage	DTMB : 21 to 69	PAL D/K : VHF/UHF 1 to 69, Cable 1 to 47 PAL I : VHF/UHF 1 to 69, Cable 1 to 47 NTSC M : VHF/UHF 2 to 78, Cable 1 to 71
	External Antenna Impedance	75 Ω	

Environment condition	Operating Temperature	0 °C to 40 °C
	Operating Humidity	Less than 80 %
	Storage Temperature	-20°C to 60 °C
	Storage Humidity	Less than 85 %

For the power supply and power consumption, refer to the label attached to the product.

MODELS		42LN6150 (42LN6150-CB)
Dimensions (Width x Height x Depth)	With stand	964 x 631 x 294 (mm)
	Without stand	964 x 573 x 78 (mm)
Weight	With stand	11.8 Kg
	Without stand	10.0 Kg
Current Value / Power consumption		AC 100-240 V~ 50 / 60 Hz

MODELS		47LN6150 (47LN6150-CB)
Dimensions (Width x Height x Depth)	With stand	1076 x 695 x 327 (mm)
	Without stand	1076 x 637 x 79.4 (mm)
Weight	With stand	15.0 Kg
	Without stand	12.8 Kg
Current Value / Power consumption		AC 100-240 V~ 50 / 60 Hz

HDMI/DVI-DTV supported mode

Resolution	Horizontal Frequency (kHz)	Vertical Frequency (Hz)
640 x 480	31.469 / 31.5	59.94 / 60
720 x 480	31.469 / 31.5	59.94 / 60
720 x 576	31.25 15.625	50 50
1280 x 720	37.500 44.96 / 45	50 59.94 / 60
1920 x 1080	33.72 / 33.75 28.125 26.97 / 27 33.716 / 33.75 56.250 67.43 / 67.5	59.94 / 60 25 / 50.00 23.97 / 24 29.976 / 30.00 50 59.94 / 60

HDMI/DVI-PC supported mode

Resolution	Horizontal Frequency (kHz)	Vertical Frequency (Hz)
640 x 350	31.468	70.09
720 x 400	31.469	70.08
640 x 480	31.469	59.94
800 x 600	37.879	60.31
1024 x 768	48.363	60.00
1152 x 864	54.348	60.053
1280 x 1024	63.981	60.020
1360 x 768	47.712	60.015
1920 x 1080	67.5	60.00

Component port connecting information

Component ports on the TV	Y	P_B	P_R

Video output ports on DVD player	Y	P_B	P_R
	Y	B-Y	R-Y
	Y	Cb	Cr
	Y	Pb	Pr

Signal	Component
480i/576i	O
480p/576p	O
720p/1080i	O
1080p	O (50 Hz / 60 Hz only)

ENGLISH

EXTERNAL CONTROL DEVICE SETUP

To obtain the external control device setup information, please visit ‘www.lg.com’.

MAINTENANCE

Cleaning Your TV

Clean your TV regularly to keep it at peak performance and to extend the product lifespan.

CAUTION
- Make sure to turn the power off and disconnect the power cord and all other cables first.
- When the TV is left unattended or unused for a long time, disconnect the power cord from the wall outlet to prevent possible damage from lightning or power surges.

Screen, frame, cabinet and stand

To remove dust or light dirt, wipe the surface with a dry, clean, and soft cloth.
To remove major dirt, wipe the surface with a soft cloth dampened in clean water or a diluted mild detergent. Then wipe immediately with a dry cloth.

CAUTION
- Do not push, rub, or hit the surface with your fingernail or a sharp object, as this may result in scratches on the screen and image distortions.
- Do not use any chemicals, such as waxes, benzene, alcohol, thinners, insecticides, air fresheners, lubricants, as these may damage the screen's finish and cause discoloration.
- Do not spray liquid onto the surface. If water enters the TV, it may result in fire, electric shock, or malfunction.

Power cord

Remove the accumulated dust or dirt on the power cord regularly.

ENGLISH

TROUBLESHOOTING

Problem	Solution
Cannot control the TV with the remote control.	• Check the remote control sensor on the product and try again. • Check if there is any obstacle between the product and the remote control. • Check if the batteries are still working and properly installed (⊕ to ⊕, ⊖ to ⊖).
No image display and no sound is produced.	• Check if the product is turned on. • Check if the power cord is connected to a wall outlet. • Check if there is a problem in the wall outlet by connecting other products.
The TV turns off suddenly.	• Check the power control settings. The power supply may be interrupted. • Check if the Auto sleep feature is activated in the Time settings. • If there is no signal while the TV is on, the TV will turn off automatically after 15 minutes of inactivity.



The model and serial number of the TV is located on the back and one side of the TV.
Record it below should you ever need service.

MODEL _____

SERIAL _____