LG
Life's Good

Owner's Manual

Laser Display Screen

Please read the safety information carefully before using the product.

SC105

P/NO : MFL67864905 (1307-REV01)

www.lg.com

SAFETY PRECAUTIONS

Please take note of the safety instructions to prevent any potential accident or misuse of the product.

- Safety precautions are given in two forms, i.e. Warning and Caution as detailed below.

  ⚠ **WARNING**: Failure to follow the instructions may cause serious injury and even death.

  ⚠ **CAUTION**: Failure to follow the instructions may cause minor injury or damage to the product.

- Read the owner's manual carefully and keep it at hand.

Installation

⚠ WARNING

- The product should be installed by a qualified professional specified by the retail store.
  - The product installation by a non-qualified personnel is dangerous and may cause personal injury.
- The product should be installed where its weight can be supported.
  - Otherwise, the product may fall and cause personal injury.
- When moving or replacing the product after installation, contact a qualified installer specified by the retail store.
  - If an unqualified person moves and installs the product, this may cause safety issues as this task requires the special technique.
- Do not hang on the product or apply shock to the product.
  - The product may fall and cause injury.

⚠ CAUTION

- Follow the instructions in the manual to install the product.
  - Otherwise, it may cause serious injury or damage to the product.
- When installing the product or adjusting the height of the product, two or more people are needed.
  - If you do it by yourself, you may drop the product causing personal injury or damage to the product.
- When installing the product, check whether the wall is strong enough to hold the product and use the anchors and screws provided.
  - Otherwise, the product could fall causing safety issues.

⚠ CAUTION

- When drilling the holes in the wall, make sure you use a drill and a drill bit with the specified size of diameter. Ensure that you also follow the instructions regarding the depth of the holes.
  - Otherwise, the product may be installed improperly causing safety issues.
- Do not clean the product with wet towels, and do not use a heater or humidifier underneath the product.
  - Moisture permeating into the product, steam or heat may result in fire, electric shock or damage to the product.
- Keep the product away from sprinklers, sensors, high-tension wires and power sources. Do not install the product in a location where vibrations or shock impacts are likely to occur.
- Wear working gloves when installing the product. Do not use bare hands.
  - Otherwise, it may cause personal injury.
- Do not place the product where it is directly exposed to the light.
  - The image may look dark due to the light.

PREPARATION

Accessories

Check the accessories provided with the product.
The picture may be different from the actual product.
Accessories are subject to change without prior notice in order to improve the performance of the product. New accessories may be added or old ones may be removed.

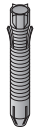

8 anchors for attaching rings (Φ8)



8 bolts for attaching rings (Φ8)



Magnet 15 EA



Paper template



Tape 6 EA

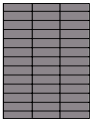

1 sheet of warp correction sponge



2 Rings



1 piece of tape to attach the paper template



18 Steel Spacers



1 warp correction ring



Safety lock pin 2 EA



Thread

Preparations

Drill (M6, M8), leveler, tapeline, driver, tape

INSTALLATION

Fixing the Anchor, Screw

CAUTION

- Check the material of the wall and the thickness of the finishing.
- Use the anchors for wall material of concrete, light concrete, strong natural stone, soft natural stone masonry
- brick and hallow block that do not crack.
- When installing the product on wall material not designated, install the product so that each fixated location can withstand the pull out load of 70 kgf (686 N) and shear load of 100 kgf (980 N) or above.

a. Use a drill bit Ø8 mm to drill a hole for the anchor location within a depth of 80 mm - 100 mm.
b. Clean the drilled hole.
c. Insert the sealed anchor to the hole. (When inserting the anchor, use a hammer.)
d. Set the wall mount on the wall by aligning to the location of the hole. and, set the angle adjusting part to face upward.
Align the wall mount bolt to the hole and tighten it. Then, fasten the bolts at torque of 45 kgf/cm - 60 kgf/cm.

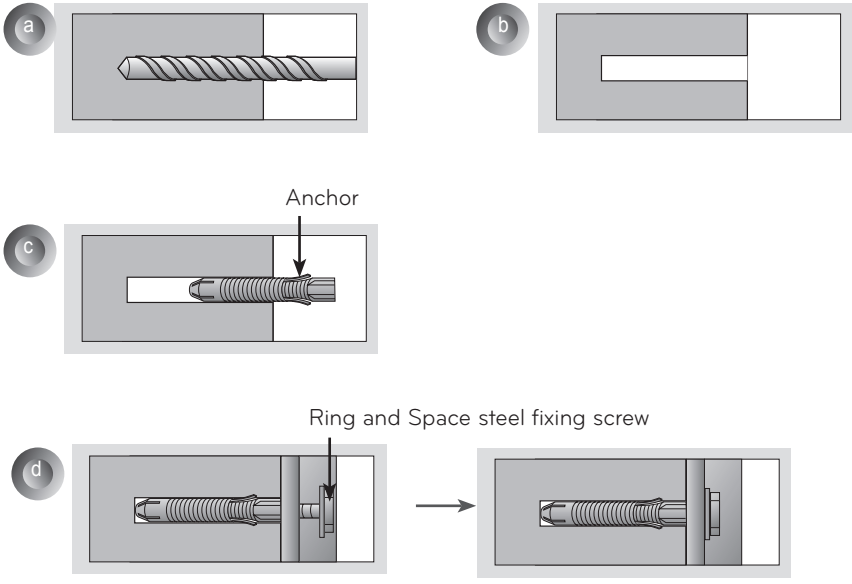

INSTALLATION STEP

1 Attach a paper screen to the place where the screen will be located. (The paper screen helps to easily install the adjustable bracket and bore holes in the wall.)

2 Two people lift the screen up until its bottom edge is level to the magnets at the bottom of the paper screen. Put the screen close to the wall aligning with the locations marked with the tapes and hang the brackets on the rings by carefully pulling it down.

CAUTION

- Align the top of screen with the top of the tape and the left and right sides of the screen with the tape. Hang the bracket on the rings by lowering the screen carefully. If the screen is upside down, the screen will be dark and no image will be displayed.

<Ceiling type>

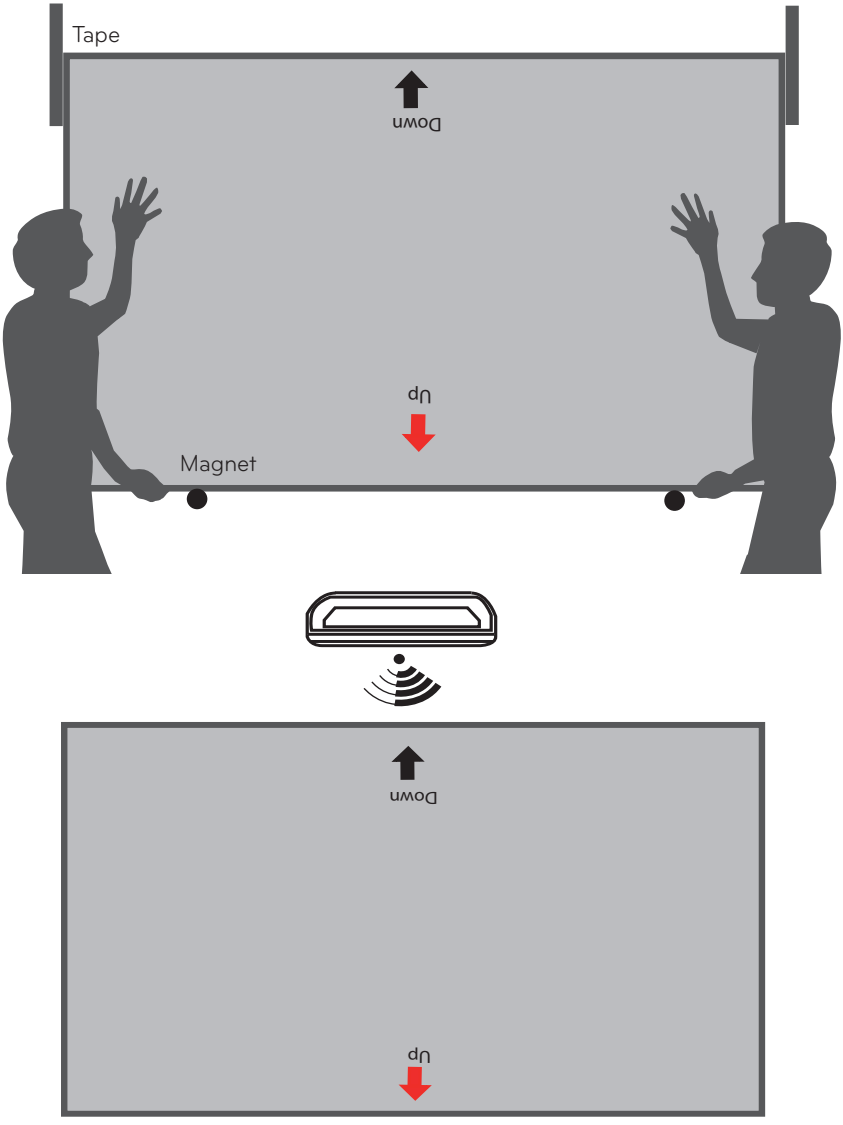

<Stand type>

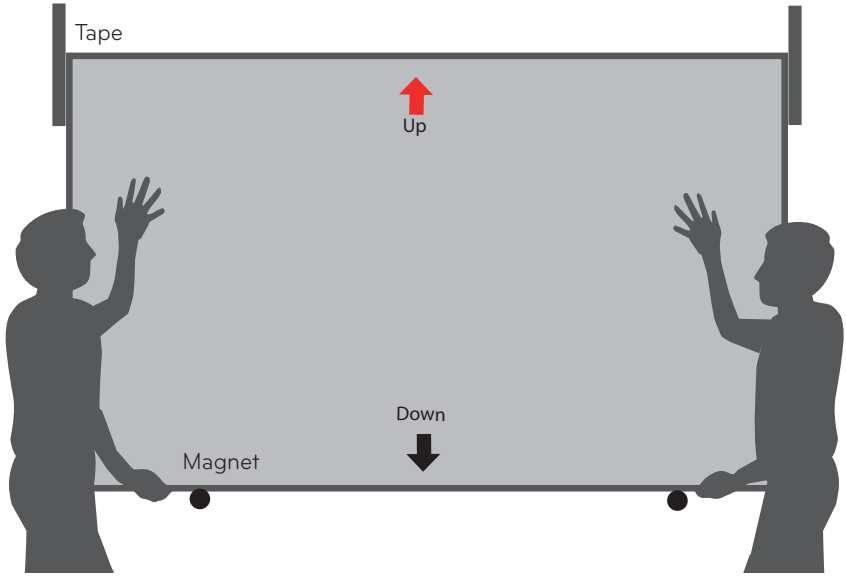

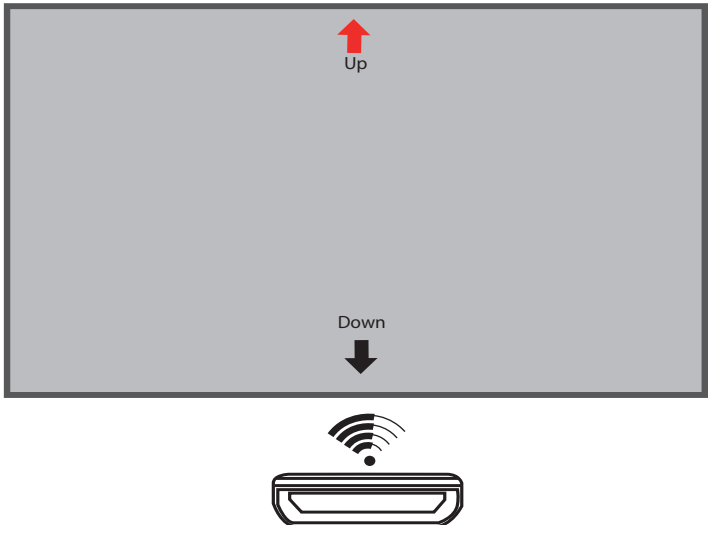

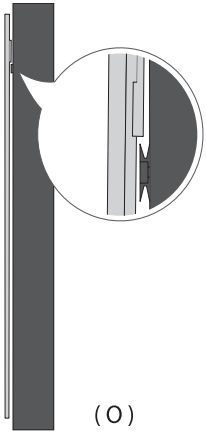

(O)

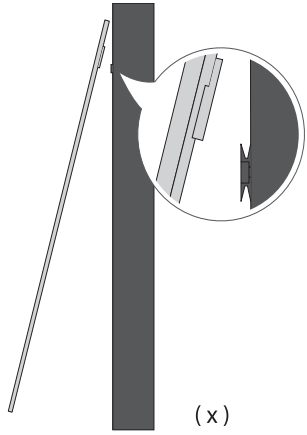

(x)

CAUTION

- If the screen is tilted when pulling it down, the screen may not fix to the bracket and result in damage to the screen.

3 Move the screen in all directions to check whether the screen is securely hung on the rings.

SPECIFICATIONS

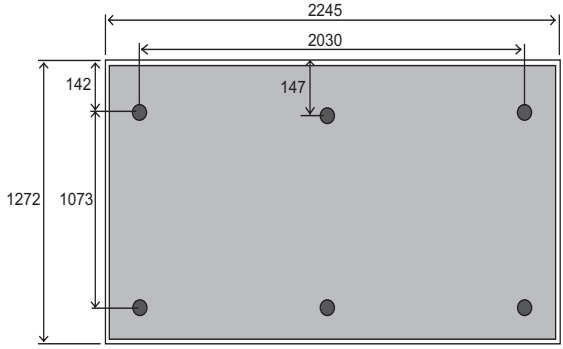

Model	SC105
Width (mm)	2245 ± 5 mm
Height (mm)	1272 ± 3 mm
Frame Height (mm)	12.0 ± 1.0 mm
Depth (mm)	9.1 ± 0.2 mm
Weight (kg)	32.30 kg


LG
Life's Good