Printing specification

	Drawn	Checked	Approved
Signature	Suin.kim	Yena.park	Jongok.kim
MMM/DD/YYYY	Jan/22/2013	Jan/22/2013	Jan/22/2013

1. Model Description

Model name	:	**LA66-Z**	Brand name	:	**LG**	Part number	: **MFL67658608**
2nd, 3rd Suffix	:	**EK**	Product name	:	**LA660S**	(Revision number)	**(1307-REV03)**

2. Printing Specification

1. Trim size (Format) : **182 mm x 257 mm (B5)**
2. Printing colors
   - Cover : **1 Color (Black)**
   - Inside : **1 Color (Black)**
3. Stock (Paper)
   - Cover : **Uncoated, wood-free paper 60 g/㎡**
   - Inside : **Uncoated, wood-free paper 60 g/㎡**
4. Bindery : **Saddle stitching**
5. Language : **ENG-UK (1)**
6. Number of pages : **52**

NOTE

"This part contains Eco-hazardous substances (Pb, Cd, Hg, Cr6+, PBB, PBDE, etc.) within LG standard level,
Details should be followed Eco-SCM management standard[LG(56)-A-2524].
Especially, Part should be followed and controlled the following specification.
(1) Eco-hazardous substances test report should be submitted when Part certification test and First Mass Production.
(2) Especially, Don't use or contain lead(Pb) and cadmium(Cd) in ink.

3. Origin Notification

LGEAK :	Printed in Kazakhstan	LGEKR :	Printed in Korea	LGERS :	Printed in Mexico
LGEAZ :	Printed in Brazil	LGEMA :	Printed in Poland	LGESY :	Printed in China
LGEEG :	Printed in Egypt	LGEMX :	Printed in Mexico	LGETH :	Printed in Thailand
LGEIL :	Printed in India	LGEND :	Printed in China	LGEVN :	Printed in Vietnam
LGEIN :	Printed in Indonesia	LGERA :	Printed in Russia	LGEWR :	Printed in Poland

4. Changes

Rev. Number	MMM/DD/YYYY	Signature	ECO Number	Change Contents
10				
9				
8				
7				
6				
5				
4				
3	Jul/16/2013	Danbi Park	**EKLD700752**	Added the New model
2	Apr/06/2013	Danbi. Park	EKLD302273	Manual Improvement.
1	Mar/06/2013	Danbi. Park	EKLD300509	Manual Improvement.

Pagination sheet

Part number : **MFL67658608**
Total pages : **52 pages**

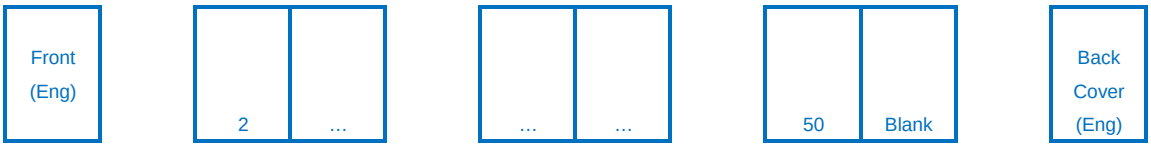

LG
Life's Good

OWNER'S MANUAL
LED TV

* LG LED TV applies LCD screen with LED backlights.

Please read this manual carefully before operating your set and retain it for future reference.

LA62**	LN57**
LA64**	LN61**
LA66**	LN65**
LA69**	
LA71**	
LA74**	

P/NO : MFL67658608 (1307-REV03)
Printed in Korea

www.lg.com

ENGLISH

TABLE OF CONTENTS

3 LICENSES

3 OPEN SOURCE SOFTWARE NOTICE

4 SAFETY INSTRUCTIONS

10 - Viewing 3D Imaging (Only 3D models)

12 INSTALLATION PROCEDURE

12 ASSEMBLING AND PREPARING

12 Unpacking
15 Separate purchase
16 Parts and buttons
17 Lifting and moving the TV
18 Setting up the TV
18 - Attaching the stand
21 Mounting on a table
23 Mounting on a wall
25 Tidying cables

26 MAKING CONNECTIONS

26 Antenna connection
26 Satellite dish connection
27 HDMI connection
28 DVI to HDMI connection
28 Component connection
29 Composite connection
29 MHL connection
30 Audio connection
30 - Digital optical audio connection
30 USB connection
31 CI module connection
31 Headphone connection
32 Euro Scart connection

33 REMOTE CONTROL

35 MAGIC REMOTE CONTROL FUNCTIONS

36 Registering Magic Remote Control
36 How to use Magic Remote Control
36 Precautions to Take when Using the Magic Remote Control

37 USING THE USER GUIDE

38 MAINTENANCE

38 Cleaning your TV
38 - Screen, frame, cabinet and stand
38 - Power cord

38 TROUBLESHOOTING

39 EXTERNAL CONTROL DEVICE SETUP

39 SPECIFICATIONS

WARNING

- If you ignore the warning message, you may be seriously injured or there is a possibility of accident or death.

CAUTION

- If you ignore the caution message, you may be slightly injured or the product may be damaged.

NOTE

- The note helps you understand and use the product safely. Please read the note carefully before using the product.

LICENSES

Supported licenses may differ by model. For more information about licenses, visit *www.lg.com*.

Manufactured under license from Dolby Laboratories. “Dolby” and the double-D symbol are trademarks of Dolby Laboratories.

The terms HDMI and HDMI High-Definition Multimedia interface, and the HDMI logo are trademarks or registered trademarks of HDMI Licensing LLC in the United States and other countries.

ABOUT DIVX VIDEO: DivX® is a digital video format created by DivX, LLC, a subsidiary of Rovi Corporation. This is an official DivX Certified® device that plays DivX video. Visit *divx.com* for more information and software tools to convert your files into DivX video.

ABOUT DIVX VIDEO-ON-DEMAND: This DivX Certified® device must be registered in order to play purchased DivX Video-on-Demand (VOD) movies. To obtain your registration code, locate the DivX VOD section in your device setup menu. Go to vod.divx.com for more information on how to complete your registration.

“DivX Certified® to play DivX® video up to HD 1080p, including premium content.”

“DivX®, DivX Certified® and associated logos are trademarks of Rovi Corporation or its subsidiaries and are used under license.”

“Covered by one or more of the following U.S. patents :
7,295,673; 7,460,668; 7,515,710; 7,519,274”

Manufactured under license under U.S. Patent Nos: 5,956,674; 5,974,380; 6,487,535 & other U.S. and worldwide patents issued & pending. DTS, the Symbol & DTS and the Symbol together are registered trademarks & DTS 2.0+Digital Out is a trademark of DTS, Inc. Product includes software. © DTS, Inc. All Rights Reserved.

OPEN SOURCE SOFTWARE NOTICE

To obtain the source code under GPL, LGPL, MPL and other open source licenses, that is contained in this product, please visit *http://opensource.lge.com* .
In addition to the source code, all referred license terms, warranty disclaimers and copyright notices are available for download.
LG Electronics will also provide open source code to you on CD-ROM for a charge covering the cost of performing such distribution (such as the cost of media, shipping and handling) upon email request to opensource@lge.com. This offer is valid for three (3) years from the date on which you purchased the product.

ENGLISH

SAFETY INSTRUCTIONS

Please read these safety precautions carefully before using the product.

WARNING



- Do not place the TV and/or remote control in the following environments:
  - A location exposed to direct sunlight
  - An area with high humidity such as a bathroom
  - Near any heat source such as stoves and other devices that produce heat
  - Near kitchen counters or humidifiers where they can easily be exposed to steam or oil
  - An area exposed to rain or wind
  - Near containers of water such as vases

  Otherwise, this may result in fire, electric shock, malfunction or product deformation.



- Do not place the product where it might be exposed to dust.
  This may cause a fire hazard.

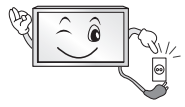

- Mains Plug is the TV connecting/disconnecting device to AC mains electric supply. This plug must remain readily attached and operable when TV is in use.



- Do not touch the power plug with wet hands. Additionally, if the cord pin is wet or covered with dust, dry the power plug completely or wipe dust off.
  You may be electrocuted due to excess moisture.



- Make sure to connect Mains cable to compliant AC mains socket with Grounded earth pin. (Except for devices which are not grounded on earth.) Otherwise possibility you may be electrocuted or injured.

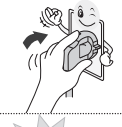

- Insert power cable plug completely into wall socket otherwise if not secured completely into socket, fire ignition may break out.

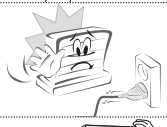

- Ensure the power cord does not come into contact with hot objects such as a heater.
  This may cause a fire or an electric shock hazard.

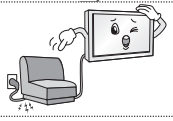

- Do not place a heavy object, or the product itself, on power cables.
  Otherwise, this may result in fire or electric shock.

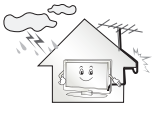

- Bend antenna cable between inside and outside building to prevent rain from flowing in.
  This may cause water damaged inside the Product and could give an electric shock.



- When mounting TV onto wall make sure to neatly install and isolate cabling from rear of TV as to not create possibility of electric shock /fire hazard.

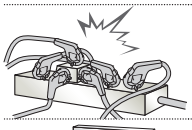

- Do not plug too many electrical devices into a single multiple electrical outlet. Otherwise, this may result in fire due to over-heating.

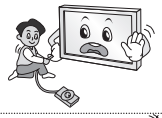

- Do not drop the product or let it fall over when connecting external devices. Otherwise, this may result in injury or damage to the product.



- Keep the anti-moisture packing material or vinyl packing out of the reach of children.
  Anti-moisture material is harmful if swallowed. If swallowed by mistake, force the patient to vomit and visit the nearest hospital. Additionally, vinyl packing can cause suffocation. Keep it out of the reach of children.

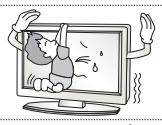

- Do not let your children climb or cling onto the TV.
  Otherwise, the TV may fall over, which may cause serious injury.



- Dispose of used batteries carefully to ensure that a small child does not consume them.
  Please seek Doctor- Medical Attention immediately if child consumes batteries.

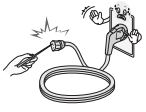

- Do not insert any metal objects/conductors (like a metal chopstick/cutlery/ screwdriver) between power cable plug and input Wall Socket while it is connected to the input terminal on the wall. Additionally, do not touch the power cable right after plugging into the wall input terminal. You may be electrocuted.
  (Depending on model)



- Do not put or store inflammable substances near the product.
  There is a danger of combustion/explosion or fire due to careless handling of the inflammable substances.



- Do not drop metallic objects such as coins, hair pins, chopsticks or wire into the product, or inflammable objects such as paper and matches. Children must pay particular attention.
  Electrical shock, fire or injury can occur. If a foreign object is dropped into the product, unplug the power cord and contact the service centre.



- Do not spray water on the product or scrub with an inflammable substance (thinner or benzene). Fire or electric shock accident can occur.



- Do not allow any impact, shock or any objects to fall into the unit, and do not drop anything onto the screen.
  You may be injured or the product can be damaged.



- Never touch this product or antenna during a thunder or lighting storm.
  You may be electrocuted.

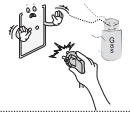

- Never touch the wall outlet when there is leakage of gas, open the windows and ventilate.
  It may cause a fire or a burn by a spark.



- Do not disassemble, repair or modify the product at your own discretion.
  Fire or electric shock accident can occur.
  Contact the service centre for check, calibration or repair.



- If any of the following occur, unplug the product immediately and contact your local service centre.
  - The product has been impacted by shock
  - The product has been damaged
  - Foreign objects have entered the product
  - The product produced smoke or a strange smell

  This may result in fire or electric shock.

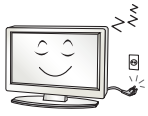

- Unplug the TV from AC mains wall socket if you do not intend to use the TV for a long period of time.

  Accumulated dust can cause fire hazard and insulation deterioration can cause electric leakage/shock/fire.

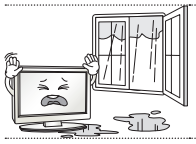

- Apparatus shall not be exposed to dripping or splashing and no objects filled with liquids, such as vases, shall be placed on the apparatus.

CAUTION

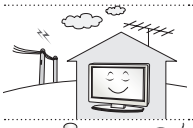

- Install the product where no radio wave occurs.

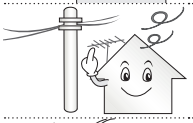

- There should be enough distance between an outside antenna and power lines to keep the former from touching the latter even when the antenna falls.
  This may cause an electric shock.



- Do not install the product on places such as unstable shelves or inclined surfaces. Also avoid places where there is vibration or where the product cannot be fully supported.
  Otherwise, the product may fall or flip over, which may cause injury or damage to the product.

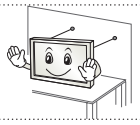

- If you install the TV on a stand, you need to take actions to prevent the product from overturning. Otherwise, the product may fall over, which may cause injury.

- If you intend to mount the product to a wall, attach VESA standard mounting interface (optional parts) to the back of the product. When you install the set to use the wall mounting bracket (optional parts), fix it carefully so as not to drop.
- Only use the attachments / accessories specified by the manufacturer.



- When installing the antenna, consult with a qualified service technician. If not installed by a qualified technician, this may create a fire hazard or an electric shock hazard.

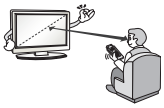

- We recommend that you maintain a distance of at least 2 to 7 times the diagonal screen size when watching TV.
  If you watch TV for a long period of time, this may cause blurred vision.

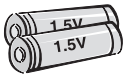

- Only use the specified type of battery.
  This could cause damage to the remote control.

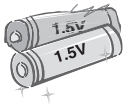

- Do not mix new batteries with old batteries.
  This may cause the batteries to overheat and leak.

- Batteries should not be exposed to excessive heat. For example, keep away from direct Sunlight , open fireplace and electric heaters .
- Do not place non-rechargeable batteries in charging device.

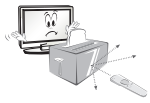

- Make sure there are no objects between the remote control and its sensor.

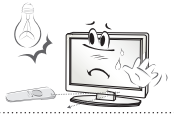

- Signal from Remote Control can be interrupted due to external/internal lighting eg Sunlight, fluorescent lighting.
  If this occurs turn off lighting or darken viewing area.

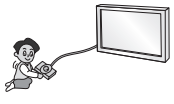

- When connecting external devices such as video game consoles, make sure the connecting cables are long enough.
  Otherwise, the product may fall over, which may cause injury or damage the product.



- Do not turn the product On/Off by plugging-in or unplugging the power plug to the wall outlet. (Do not use the power plug for switch.)
  It may cause mechanical failure or could give an electric shock.

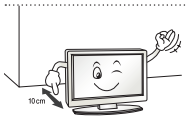

- Please follow the installation instructions below to prevent the product from overheating.
  - The distance between the product and the wall should be more than 10 cm.
  - Do not install the product in a place with no ventilation (e.g., on a bookshelf or in a cupboard).
  - Do not install the product on a carpet or cushion.
  - Make sure the air vent is not blocked by a tablecloth or curtain.

  Otherwise, this may result in fire.

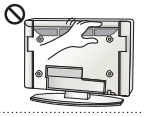

- Take care not to touch the ventilation openings when watching the TV for long periods as the ventilation openings may become hot. This does not affect the operation or performance of the product.

- Periodically examine the cord of your appliance, and if its appearance indicates damage or deterioration, unplug it, discontinue use of the appliance, and have the cord replaced with an exact replacement part by an authorized servicer.

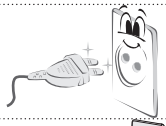

- Prevent dust collecting on the power plug pins or outlet.
  This may cause a fire hazard.

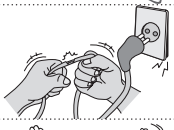

- Protect the power cord from physical or mechanical abuse, such as being twisted, kinked, pinched, closed in a door, or walked upon. Pay particular attention to plugs, wall outlets, and the point where the cord exits the appliance.



- Do not press strongly upon the panel with a hand or sharp object such as nail, pencil or pen, or make a scratch on it, as it may cause damage to screen.



- Avoid touching the screen or holding your finger(s) against it for long periods of time. Doing so may produce some temporary or permanent distortion/damage to screen.



- When cleaning the product and its components, unplug the power first and wipe it with a soft cloth. Applying excessive force may cause scratches or discolouration. Do not spray with water or wipe with a wet cloth. Never use glass cleaner, car or industrial shiner, abrasives or wax, benzene, alcohol etc., which can damage the product and its panel.
  Otherwise, this may result in fire, electric shock or product damage (deformation, corrosion or breakage).

- As long as this unit is connected to the AC wall outlet, it is not disconnected from the AC power source even if you turn off this unit by SWITCH.

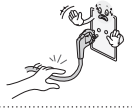

- When unplugging the cable, grab the plug and unplug it, by pulling at the plug. Don’t pull at the cord to unplug the power cord from the power board, as this could be hazardous.



- When moving the product, make sure you turn the power off first. Then, unplug the power cables, antenna cables and all connecting cables.
  The TV set or power cord may be damaged, which may create a fire hazard or cause electric shock.



- When moving or unpacking the product, work in pairs because the product is heavy.
  Otherwise, this may result in injury.



- Contact the service centre once a year to clean the internal parts of the product. Accumulated dust can cause mechanical failure.



- Refer all servicing to qualified service personnel. Servicing is required when the apparatus has been damaged in any way, such as power supply cord or plug is damaged, liquid has been spilled or objects have fallen into the apparatus, the apparatus has been exposed to rain or moisture, does not operate normally, or has been dropped.



- If the product feels cold to the touch, there may be a small “flicker” when it is turned on. This is normal, there is nothing wrong with product.



- The panel is a high technology display product with resolution of two million to six million pixels. You may see tiny black dots and/or brightly coloured dots (red, blue or green) at a size of 1 ppm on the panel. This does not indicate a malfunction and does not affect the performance and reliability of the product.
  This phenomenon also occurs in third-party products and is not subject to exchange or refund.



- You may find different brightness and color of the panel depending on your viewing position(left/right/top/down).
  This phenomenon occurs due to the characteristic of the panel. It is not related with the product performance, and it is not malfunction.

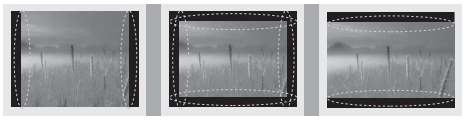

- Displaying a still image (e.g., broadcasting channel logo, on-screen menu, scene from a video game) for a prolonged time may cause damage to the screen, resulting in retention of the image, which is known as image sticking. The warranty does not cover the product for image sticking.
  Avoid displaying a fixed image on your television’s screen for a prolonged period (2 or more hours for LCD, 1 or more hours for Plasma).
  Also, if you watch the TV at a ratio of 4:3 for a long time, image sticking may occur on the borders of the panel.
  This phenomenon also occurs in third-party products and is not subject to exchange or refund.
- **Generated Sound**
  “Cracking” noise: A cracking noise that occurs when watching or turning off the TV is generated by plastic thermal contraction due to tempera-ture and humidity. This noise is common for products where thermal deformation is required. Electrical circuit humming/panel buzzing: A low level noise is generated from a high-speed switching circuit, which supplies a large amount of current to operate a product. It varies depending on the product.
  This generated sound does not affect the performance and reliability of the product.

Viewing 3D Imaging (Only 3D models)

⚠ WARNING

Viewing Environment

- Viewing Time
  - When watching 3D contents, take 5 - 15 minute breaks every hour. Viewing 3D contents for a long period of time may cause headache, dizziness, fatigue or eye strain.

Those that have a photosensitive seizure or chronic illness

- Some users may experience a seizure or other abnormal symptoms when they are exposed to a flashing light or particular pattern from 3D contents.
- Do not watch 3D videos if you feel nausea, are pregnant and/ or have a chronic illness such as epilepsy, cardiac disorder, or blood pressure disease, etc.
- 3D Contents are not recommended to those who suffer from stereo blindness or stereo anomaly. Double images or discomfort in viewing may be experienced.
- If you have strabismus (cross-eyed), amblyopia (weak eyesight) or astigmatism, you may have trouble sensing depth and easily feel fatigue due to double images. It is advised to take frequent breaks than the average adult.
- If your eyesight varies between your right and left eye, revise your eyesight prior to watching 3D contents.

Symptoms which require discontinuation or refraining from watching 3D contents

- Do not watch 3D contents when you feel fatigue from lack of sleep, overwork or drinking.
- When these symptoms are experienced, stop using/watching 3D contents and get enough rest until the symptom subsides.
  - Consult your doctor when the symptoms persist. Symptoms may include headache, eyeball pain, dizziness, nausea, palpitation, blurriness, discomfort, double image, visual inconvenience or fatigue.

⚠ CAUTION

Viewing Environment

- Viewing Distance
  - Maintain a distance of at least twice the screen diagonal length when watching 3D contents. If you feel discomfort in viewing 3D contents, move further away from the TV.

Viewing Age

- Infants/Children
  - Usage/ Viewing 3D contents for children under the age of 6 are prohibited.
  - Children under the age of 10 may overreact and become overly excited because their vision is in development (for example: trying to touch the screen or trying to jump into it. Special monitoring and extra attention is required for children watching 3D contents.
  - Children have greater binocular disparity of 3D presentations than adults because the distance between the eyes is shorter than that of adults. Therefore they will perceive more stereoscopic depth compared to adults for the same 3D image.
- Teenagers
  - Teenagers under the age of 19 may react with sensitivity due to stimulation from light in 3D contents. Advise them to refrain from watching 3D contens for a long time when they are tired.
- Elderly
  - The elderly may perceive less 3D effect compared to the young. Do not sit closer to the TV than the recommended distance.

Cautions when using the 3D glasses

- Make sure to use LG 3D glasses. Otherwise, you may not be able to view 3D videos properly.
- Do not use 3D glasses instead of your normal glasses, sunglasses or protective goggles.
- Using modified 3D glasses may cause eye strain or image distortion.
- Do not keep your 3D glasses in extremely high or low temperatures. It will cause deformation.
- The 3D glasses are fragile and are easily scratched. Always use a soft, clean piece of cloth when wiping the lenses. Do not scratch the lenses of the 3D glasses with sharp objects or clean/wipe them with chemicals.

NOTE

- Image shown may differ from your TV.
- Your TV's OSD (On Screen Display) may differ slightly from that shown in this manual.
- The available menus and options may differ from the input source or product model that you are using.
- New features may be added to this TV in the future.
- The TV can be placed in standby mode in order to reduce the power consumption. And the TV should be turned off if it will not be watched for some time, as this will reduce energy consumption.
- The energy consumed during use can be significantly reduced if the level of brightness of the picture is reduced, and this will reduce the overall running cost.

INSTALLATION PROCEDURE

1 Open the package and make sure all the accessories are included.
2 Attach the stand to the TV set.
3 Connect an external device to the TV set.
4 Make sure the network connection is available.
You can use the TV network functions only when the network connection is made.

ASSEMBLING AND PREPARING

Unpacking

Check your product box for the following items. If there are any missing accessories, contact the local dealer where you purchased your product. The illustrations in this manual may differ from the actual product and item.

CAUTION

- Do not use any unapproved items to ensure the safety and product life span.
- Any damage or injuries caused by using unapproved items are not covered by the warranty.
- Some models have a thin film attached on to the screen and this must not be removed.

NOTE

- The items supplied with your product may vary depending on the model.
- Product specifications or contents of this manual may be changed without prior notice due to upgrade of product functions.
- For an optimal connection, HDMI cables and USB devices should have bezels less than 10 mm thick and 18 mm width. Use an extension cable that supports USB 2.0 if the USB cable or USB memory stick does not fit into your TV's USB port.

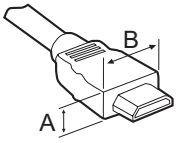

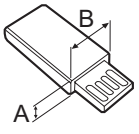

*A ≦ 10 mm
*B ≦ 18 mm

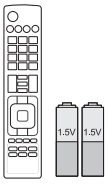

Remote control and batteries (AAA)
(Only LA62**, LA64**, LA66**, LA69**, LA71**, LA74**, LN570*, LN575*, LN577*, LN578*, LN61**, LN65**)
(Depending on model)
(See p. 33, 34)

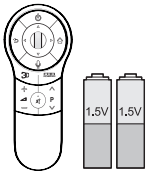

Magic Remote Control, Batteries (AA)
(Only LA66**, LA69**, LA74**, LA71**, LN578*, LN65**)
(See p. 35)

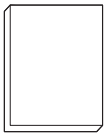

Owner's manual



Wi-Fi Dongle
(Depending on model)



Cinema 3D Glasses
The number of 3D glasses may differ depending on the model or country.
(Depending on model)



Dual play glasses
(Depending on model)

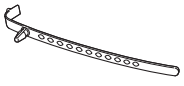

Cable Holder
(Depending on model)
(See p. 25)



Power Cord
(Depending on model)



Stand Screws
M4 x 14
(8 EA: Only LN57**-ZE/ZK, LA62**, LA64**, LA66**, LA71**, LN61**, LN65**)
(4 EA: Only LN57**-ZA)
(See p.18, 20)



Stand Screws
M4 x 20
(4 EA: Only LA69**, LA74**)
(See p. 19)



Stand Screws
3 EA, P5 x 25
(Only LN57**-ZA)
(See p. 20)



Desk-mount Screw
(1 EA : Only 32/39/42/47/50/60LN57**-ZA)
(2 EA :Only 32/39/42/47/50LN57**-ZE/ZK, 32/39/42/47/50LA62**, 32/42/47/50LA64**, 32/42/47/50LA66**, 47LA71**, 32/42/47LN61**, 32/42LN65**)
(See p. 21)



Desk-mount Cable
2 EA (Only 32/39/42/47/50LN57**-ZE/ZK, 32/39/42/47/50LA62**, 32/42/47/50LA64**, 32/42/47/50LA66**, 47LA71**, 32/42/47LN61**, 32/42LN65**)
(See p. 21)



Bracket Screw
2 EA, P4 x 8
(Only 47/50LN57**-ZE/ZK, 47/50LA62**, 47/50LA64**, 47/50LA66**, 47LA71**, 47LN61**)
(See p. 21)



Bracket Screw
2 EA, M4 x 8
(Only 32/39/42LN57**-ZE/ZK, 32/39/42LA62**, 32/42LA64**, 32/42LA66**, 32/42LN61**, 32/42LN65**)
(See p. 21)



Wall mount inner spacers
4 EA
(Only LA64**)
(See p. 24)



Tag On
(Depending on model)

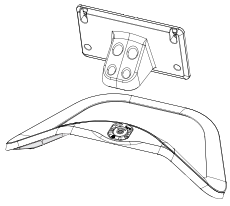

Stand Body / Stand Base
(Only LN57**-ZE/ZK, LA62**, LA64** , LA66**, LA71**, LN61**, LN65**)
(See p. 18)

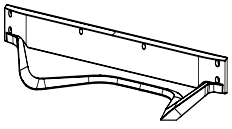

Stand Base
(Only LA69**, LA74**)
(See p. 19)

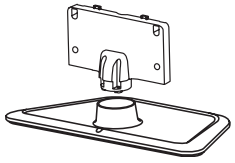

Stand Body / Stand Base
(Only LN57**-ZA)
(See p. 20)

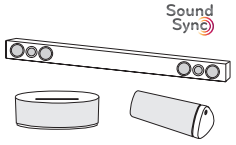

LG Audio device
(Depending on model)

Separate purchase

(Depending on model)
Separate purchase items can be changed or modified for quality improvement without any notification.
Contact your dealer to buy these items.
These devices only work with certain models.



AG-F*DP**
Dual play glasses



AG-F***
Cinema 3D Glasses

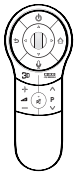

AN-MR400
Magic Remote



AN-WF100
Wi-Fi Dongle

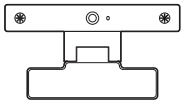

AN-VC4**
Video call camera

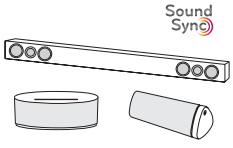

LG Audio device



Tag on

Compatibility	LN57**	LA62**, LA64**, LA66**, LA69**, LA71**, LA74**	LN61**, LN65**
AG-F*DP** Dual play glasses		• (Depending on model)	
AG-F*** Cinema 3D Glasses		•	
AN-MR400 Magic Remote	•	•	•
AN-WF100 Wi-Fi Dongle	• (Depending on model)		
AN-VC4** Video call camera	•	•	•
LG Audio device	• (Depending on model)	•	•
Tag On	• (Depending on model)	•	•

The model name or design may be changed depending on the upgrade of product functions, manufacturer's circumstances or policies.

ENGLISH

Parts and buttons

A type : LA62**, LA64**, LA66** , LA71**, LN57**-ZE/ZK, LN61** , LN65**

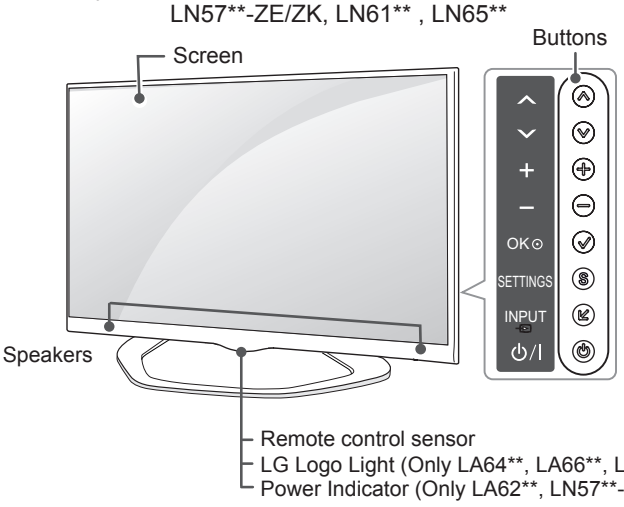

B type : LA69**, 42/47/55LA74**

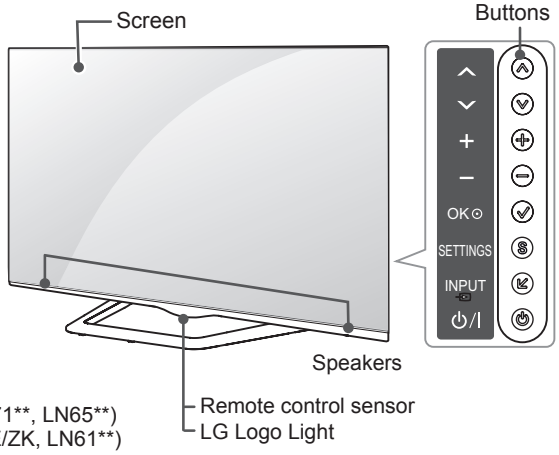

C type : 60LA74**

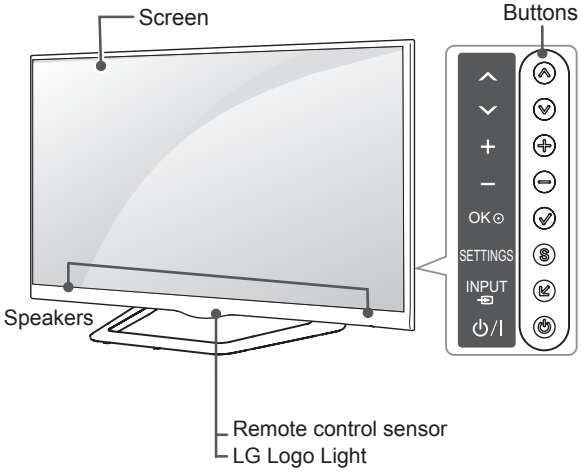

D type : LN57**-ZA

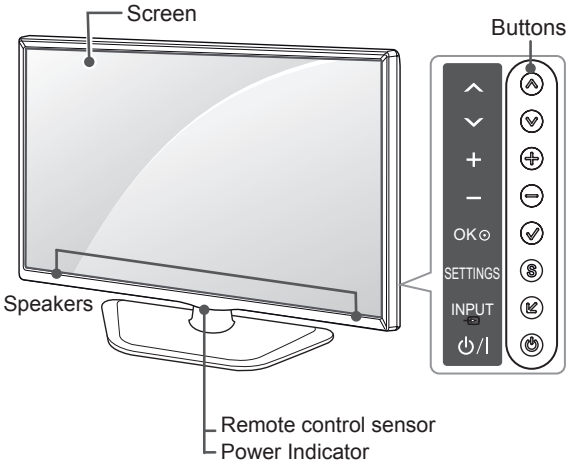

Button	Description
∧ ∨	Scrolls through the saved programmes.
+ −	Adjusts the volume level.
✓	Selects the highlighted menu option or confirms an input.
S	Accesses the main menu, or saves your input and exits the menus.
↙	Changes the input source.
⏻	Turns the power on or off.

NOTE

- You can set the LG Logo Light to on or off by selecting **OPTION** in the main menus. (Depending on model)

Lifting and moving the TV

Please note the following advice to prevent the TV from being scratched or damaged and for safe transportation regardless of its type and size.

CAUTION

- Avoid touching the screen at all times, as this may result in damage to the screen.

- It is recommended to move the TV in the box or packing material that the TV originally came in.
- Before moving or lifting the TV, disconnect the power cord and all cables.
- When holding the TV, the screen should face away from you to avoid damage.

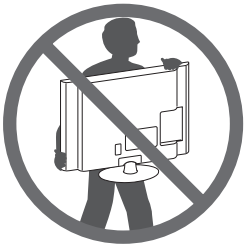

- Hold the top and bottom of the TV frame firmly. Make sure not to hold the transparent part, speaker, or speaker grill area.

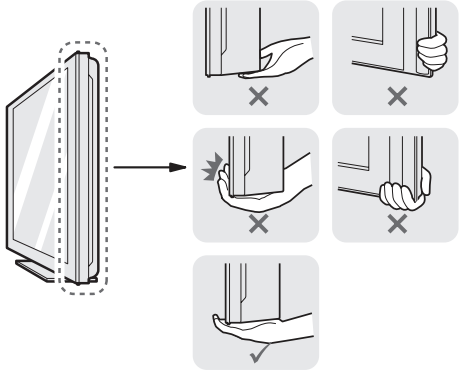

- When transporting a large TV, there should be at least 2 people.
- When transporting the TV by hand, hold the TV as shown in the following illustration.

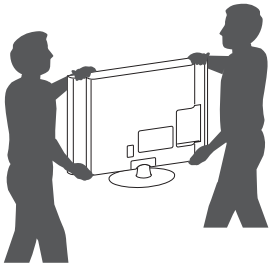

- When transporting the TV, do not expose the TV to jolts or excessive vibration.
- When transporting the TV, keep the TV upright, never turn the TV on its side or tilt towards the left or right.
- Do not apply excessive pressure to cause flexing /bending of frame chassis as it may damage screen.

ENGLISH

Setting up the TV

Image shown may differ from your TV.

Attaching the stand

LA62**, LA64**, LA66** , LA71**, LN57**-ZE/ZK, LN61** , LN65**

1

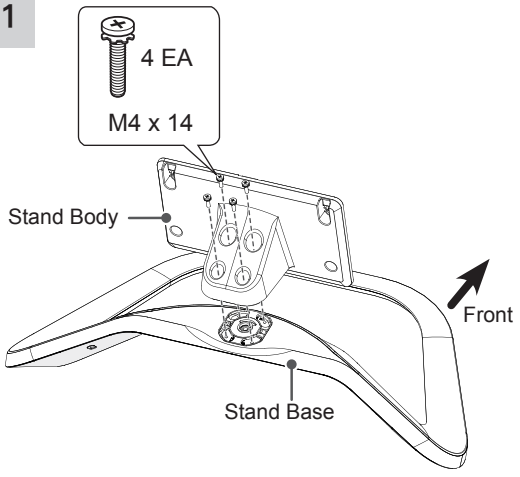

2 (Only LA62**, LN57**-ZE/ZK, LN61**)

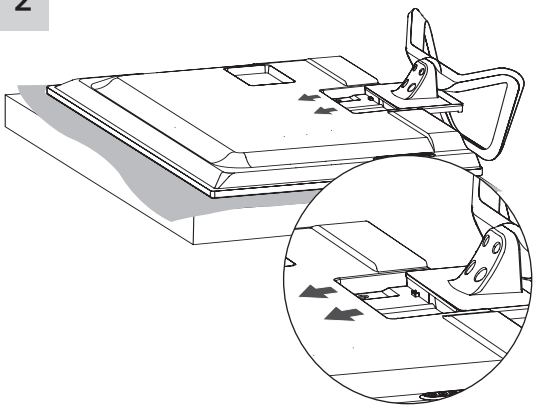

(Only LA64**, LA66** , LA71**, LN65**)

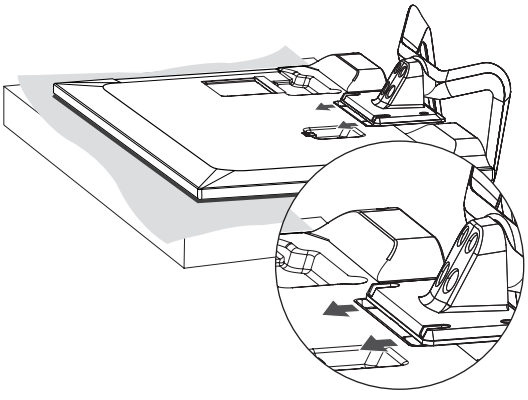

3 (Only LA62**, LN57**-ZE/ZK, LN61**)

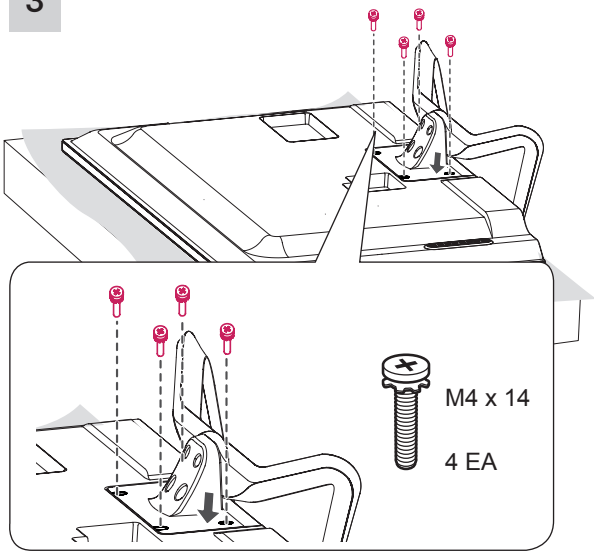

(Only LA64**, LA66** , LA71**, LN65**)

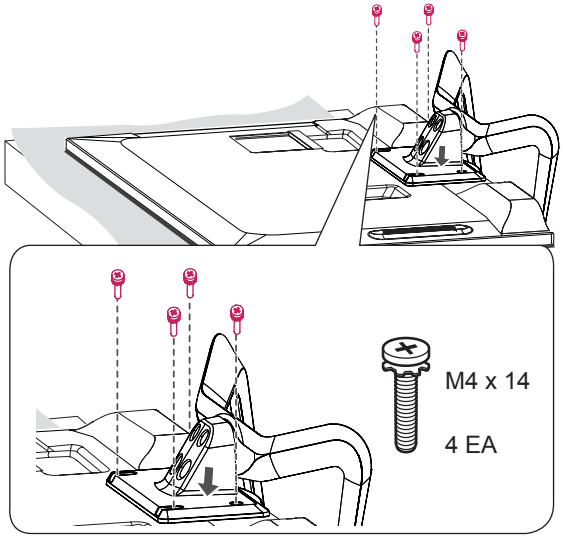

LA69**, LA74**

1

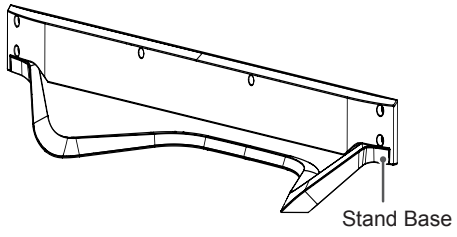

2

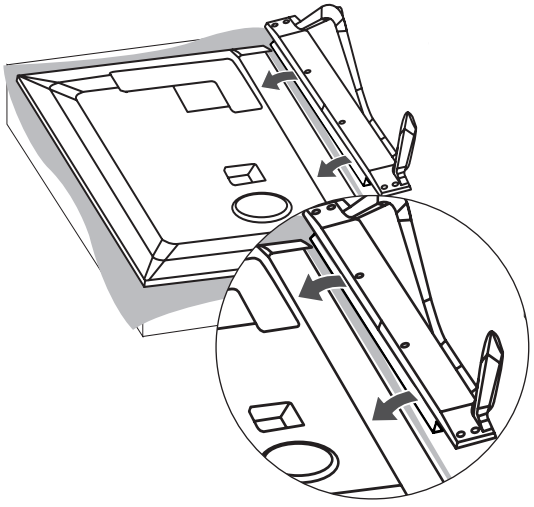

3

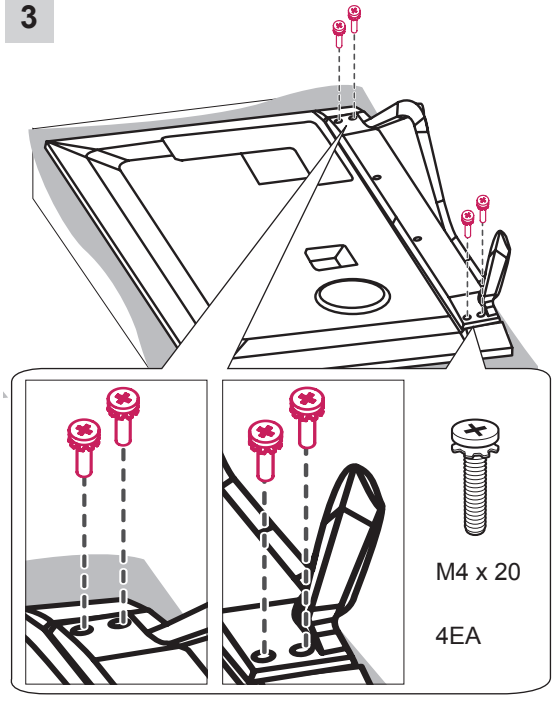

LN57**-ZA

1

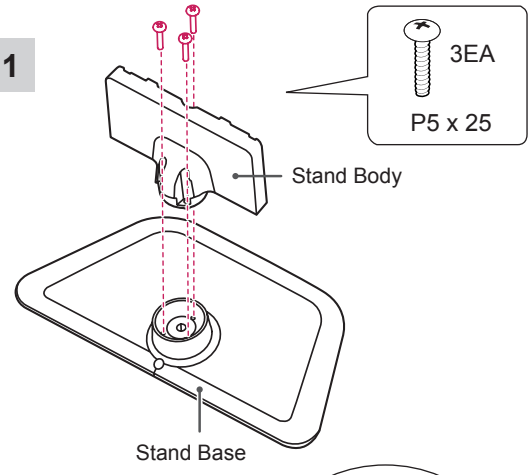

2

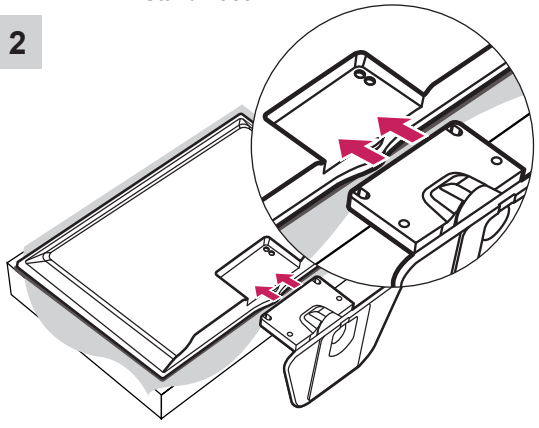

3

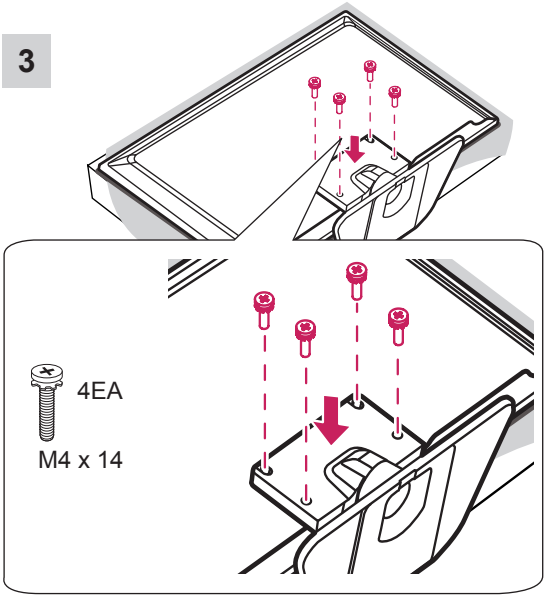

CAUTION

- When attaching the stand to the TV set, place the screen facing down on a cushioned table or flat surface to protect the screen from scratches.
- Make sure that the screws are inserted correctly and fastened securely. (If they are not fastened securely enough, the TV may tilt forward after being installed.)
  Do not use too much force and over tighten the screws; otherwise screw may be damaged and not tighten correctly.

NOTE

- Removing the protective film (from the bottom)
  (Depending on model)
  Protective film is temporarily attached to prevent the surface of the product from being damaged during delivery.
  Once the TV has been installed, please remove the protective film on the bottom of the unit as shown in the figure.

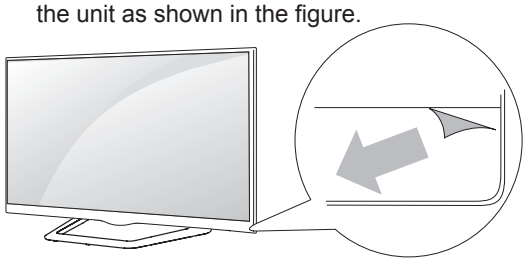

- Remove the stand before installing the TV on a wall mount by performing the stand attachment in reverse.

Mounting on a table

1 Lift and tilt the TV into its upright position on a table.
- Leave a 10 cm (minimum) space from the wall for proper ventilation.

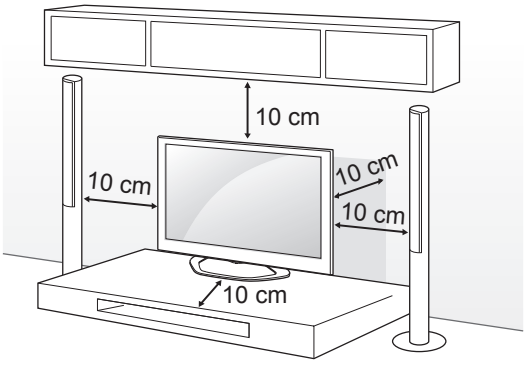

2 Connect the power cord to a wall outlet.

CAUTION

- Do not place the TV near or on sources of heat, as this may result in fire or other damage.

Using the Kensington security system (This feature is not available for all models.)

- Image shown may differ from your TV.

The Kensington security system connector is located at the rear of the TV. For more information of installation and using, refer to the manual provided with the Kensington security system or visit *http://www.kensington.com.*

Connect the Kensington security system cable between the TV and a table.

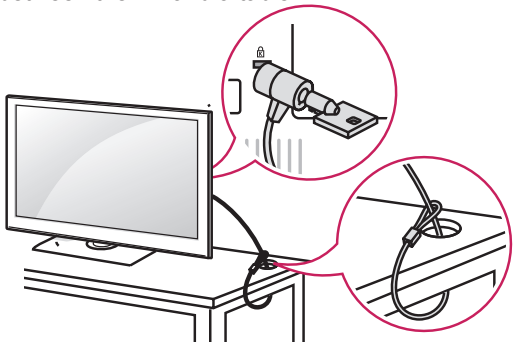

Securing the TV to a table

Fix the TV to a table to prevent from tilting forward, damage, and potential injury.
To secure the TV to a table, insert and tighten the supplied screw on the rear of the stand.
(Only 32/39/42/47/50/60LN57**-ZA)

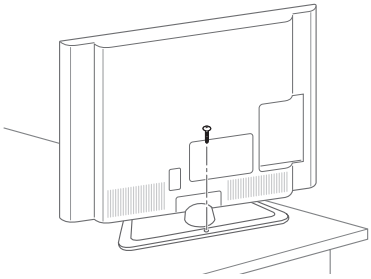

(Only 32/39/42/47/50LN57**-ZE/ZK, 32/39/42/47/50LA62**, 32/42/47/50LA64**, 32/42/47/50LA66**, 47LA71**, 32/42/47LN61**, 32/42LN65**)

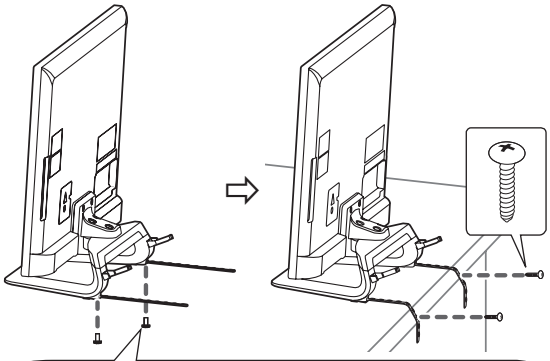

2 EA, P4 x 8
(Only 47/50LN57**-ZE/ZK, 47/50LA62**, 47/50LA64**,47/50LA66**, 47LA71**, 47LN61**)
2 EA, M4 x 8
(Only 32/39/42LN57**-ZE/ZK, 32/39/42LA62**, 32/42LA64**, 32/42LA66**, 32/42LN61**, 32/42LN65**)

NOTE

(Only 32/39/42/47/50LN57**-ZE/ZK, 32/39/42/47/50LA62**, 32/42/47/50LA64**, 32/42/47/50LA66**, 47LA71**, 32/42/47LN61**, 32/42LN65**)

How to fix the TV to a table

1. Connect the Desk-mount Cables to the Stand Base using the Bracket Screws.
2. Fix the Desk-mount Cables to a table using the Desk-mount Screws.
3. Once the TV is fixed, move the table close to the wall. Children may go in, causing injuries.

WARNING

- To prevent TV from falling over, the TV should be securely attached to the floor/ wall per installation instructions. Tipping, shaking, or rocking the TV may cause injury.

Adjusting the angle of the TV to suit view

(This feature is not available for all models.)
Swivel 15 degrees to the left or right and adjust the angle of the TV to suit your view.
(Only LA62**, LA64**, LA66**, LA71**, LN57**-ZE/ ZK, LN61**, LN65**)

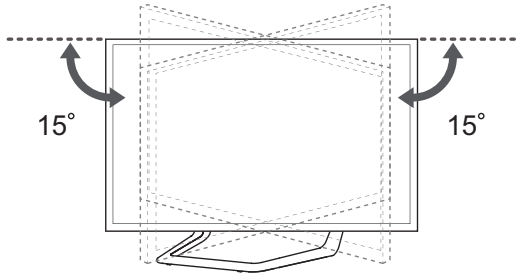

Swivel 10 degrees to the left or right and adjust the angle of the TV to suit your view.
(Only 42/47LA69**, 42/47LA74**)

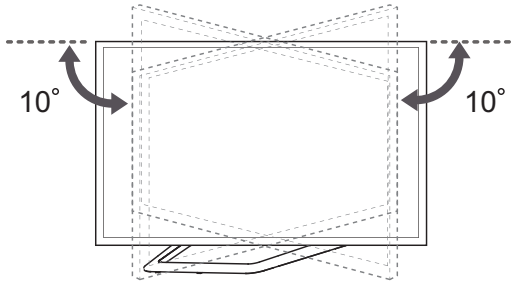

Swivel 8 degrees to the left or right and adjust the angle of the TV to suit your view.
(Only 55LA69**, 55/60LA74**)

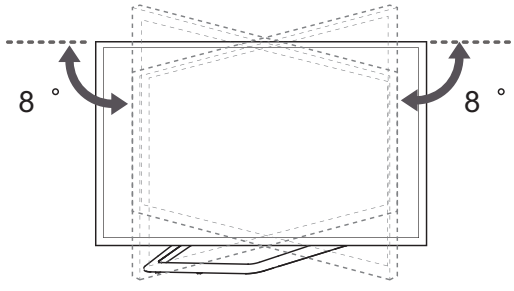

CAUTION

- When adjusting the angle of the product, watch out for your fingers.

» Personal injury may occur if hands or fingers are pinched. If the product is tilted too much, it may fall, causing damage or injury.

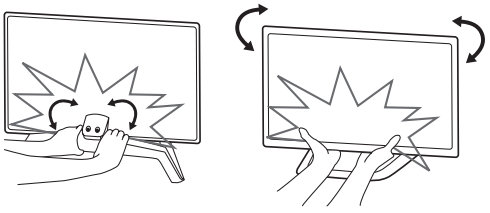

<Rear> <Front>

CAUTION

- Make sure that children do not climb on or hang on the TV.

NOTE

- Use a platform or cabinet that is strong and large enough to support the TV securely.
- Brackets, bolts and ropes are not provided. You can obtain additional accessories from your local dealer.

Securing the TV to a wall

(This feature is not available for all models.)

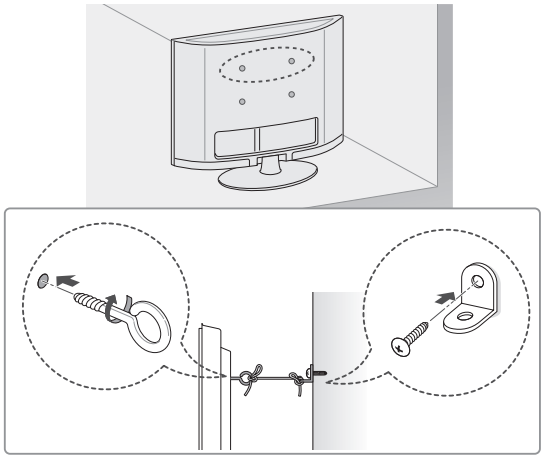

1 Insert and tighten the eye-bolts, or TV brackets and bolts on the back of the TV.
   - If there are bolts inserted at the eye-bolts position, remove the bolts first.
2 Mount the wall brackets with the bolts to the wall.
   Match the location of the wall bracket and the eye-bolts on the rear of the TV.
3 Connect the eye-bolts and wall brackets tightly with a sturdy rope.
   Make sure to keep the rope horizontal with the flat surface.

Mounting on a wall

Attach an optional wall mount bracket at the rear of the TV carefully and install the wall mount bracket on a solid wall perpendicular to the floor. When you attach the TV to other building materials, please contact qualified personnel. LG recommends that wall mounting be performed by a qualified professional installer.

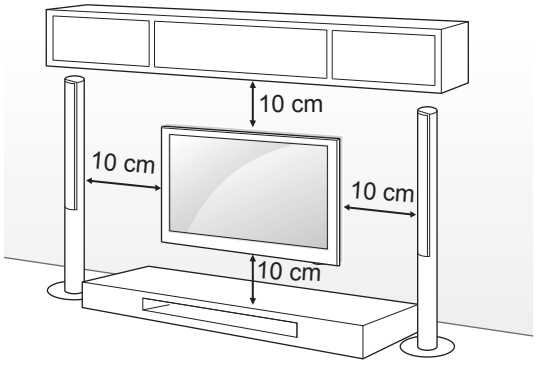

Make sure to use screws and wall mount bracket that meet the VESA standard. Standard dimensions for the wall mount kits are described in the following table.

Separate purchase(Wall Mounting Bracket)

Model	32LA62** 32LN57** 32LN61**	39/42LA62** 32LA64** 32LA66** 39/42LN57** 42LN61** 32LN65**
VESA (A x B)	200 x 100	200 x 200
Standard screw	M4	M6
Number of screws	4	4
Wall mount bracket	LSW130B	LSW230B MSW240
Model	47/50/55LA62** 42/47/50/55LA64** 42/47/50/55LA66** 42/47/55LA69** 47/55LA71** 42/47/55LA74** 47/50/55LN57** 47LN61** 42LN65**	60LA62** 60LA64** 60LA74** 60LN57**
VESA (A x B)	400 x 400	400 x 400
Standard screw	M6	M6
Number of screws	4	4
Wall mount bracket	LSW430B MSW240	LSW430B

Wall mount bracket			
LSW130B	LSW230B	LSW430B	MSW240
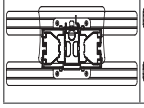	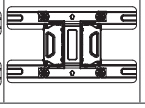		

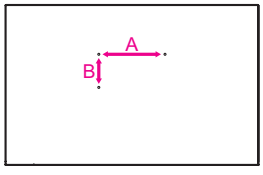

CAUTION

- Disconnect the power first, and then move or install the TV. Otherwise electric shock may occur.
- If you install the TV on a ceiling or slanted wall, it may fall and result in severe injury. Use an authorised LG wall mount and contact the local dealer or qualified personnel.
- Do not over tighten the screws as this may cause damage to the TV and void your warranty.
- Use the screws and wall mounts that meet the VESA standard. Any damages or injuries by misuse or using an improper accessory are not covered by the warranty.

NOTE

- Use the screws that are listed on the VESA standard screw specifications.
- The wall mount kit includes an installation manual and necessary parts.
- The wall mount bracket is not provided. You can obtain additional accessories from your local dealer.
- The length of screws may differ depending on the wall mount. Make sure to use the proper length.
- For more information, refer to the manual supplied with the wall mount.
- When attaching a third-party wall mounting bracket to the TV, insert the wall mount inner spacers into the TV wall mount holes to move your TV in vertical angle. Please make sure not to use the spacers for LG wall mounting bracket. (Only LA64**)

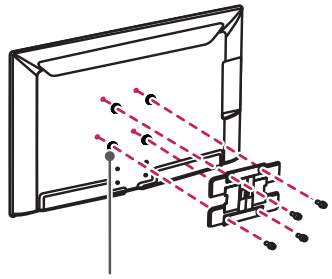

Wall Mount Inner Spacer

Tidying cables

1 Gather and bind the cables with the Cable Holder and the Cable Management.
2 Fix the Cable Management firmly to the TV.

(Only LA62**, LA64**, LA66**, LA71**, LN57**-ZE/ZK, LN61**, LN65**)

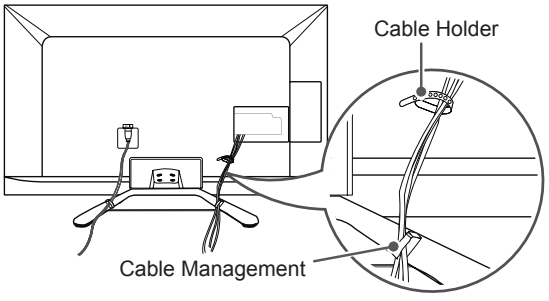

(Only LA69**, LA74**)

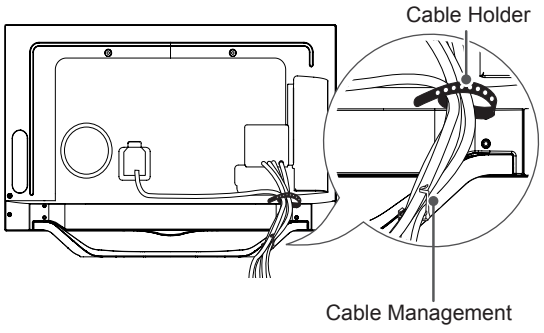

(Only LN57**-ZA)

1 Gather and bind the cables with the Cable Holder.

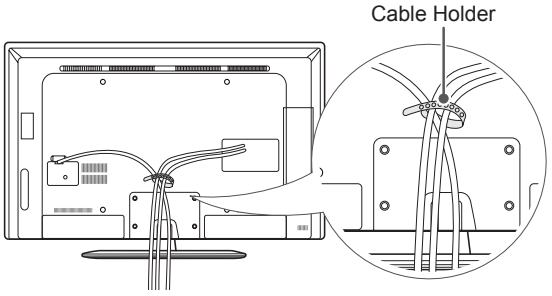

CAUTION

- Do not move the TV by holding the cable holders, as the cable holders may break, and injuries and damage to the TV may occur.

ENGLISH

MAKING CONNECTIONS

This section on **MAKING CONNECTIONS** mainly uses diagrams for the 47LA660S models.

Connect various external devices to the TV and switch input modes to select an external device. For more information of external device's connection, refer to the manual provided with each device.
Available external devices are: HD receivers, DVD players, VCRs, audio systems, USB storage devices, PC, gaming devices, and other external devices.

NOTE

- The external device connection may differ from the model.
- Connect external devices to the TV regardless of the order of the TV port.
- If you record a TV program on a DVD recorder or VCR, make sure to connect the TV signal input cable to the TV through a DVD recorder or VCR. For more information of recording, refer to the manual provided with the connected device.
- Refer to the external equipment's manual for operating instructions.
- If you connect a gaming device to the TV, use the cable supplied with the gaming device.
- In PC mode, there may be noise associated with the resolution, vertical pattern, contrast or brightness. If noise is present, change the PC output to another resolution, change the refresh rate to another rate or adjust the brightness and contrast on the PICTURE menu until the picture is clear.
- In PC mode, some resolution settings may not work properly depending on the graphics card.

Antenna connection

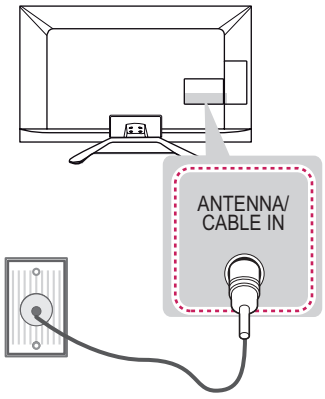

Connect the TV to a wall antenna socket with an RF cable (75 Ω).

NOTE

- Use a signal splitter to use more than 2 TVs.
- If the image quality is poor, install a signal amplifier properly to improve the image quality.
- If the image quality is poor with an antenna connected, try to realign the antenna in the correct direction.
- An antenna cable and converter are not supplied.
- Supported DTV Audio: MPEG, Dolby Digital, Dolby Digital Plus, HE-AAC

Satellite dish connection

(Only satellite models)

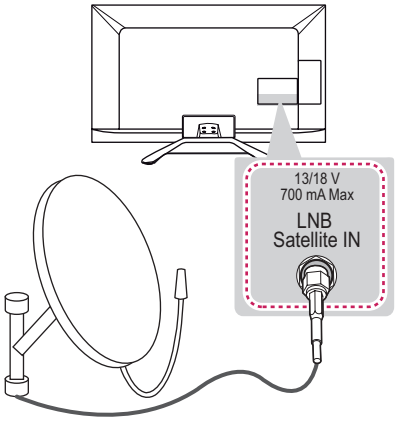

Connect the TV to a satellite dish to a satellite socket with a satellite RF cable (75 Ω).

HDMI connection

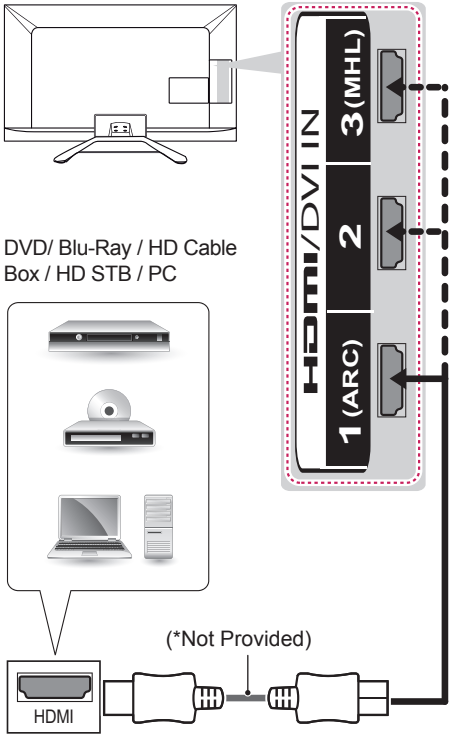

Transmits the digital video and audio signals from an external device to the TV. Connect the external device and the TV with the HDMI cable as shown. Choose any HDMI input port to connect. It does not matter which port you use.

NOTE

- It is recommended to use the TV with the HDMI connection for the best image quality.
- Use the latest High Speed HDMI™ Cable with CEC (Customer Electronics Control) function.
- High Speed HDMI™ Cables are tested to carry an HD signal up to 1080p and higher.
- Supported HDMI Audio format : Dolby Digital, DTS, PCM (Up to 192 KHz, 32KHz/44.1KHz/48KHz/88KHz/96KHz/176KHz/192KHz)

ARC (Audio Return Channel)

- An external audio device that supports SIMPLINK and ARC must be connected using HDMI/DVI IN 1 (ARC) port.
- When connected with a high-speed HDMI cable, the external audio device that supports ARC outputs optical SPDIF without additional optical audio cable and supports the SIMPLINK function.

ENGLISH

DVI to HDMI connection

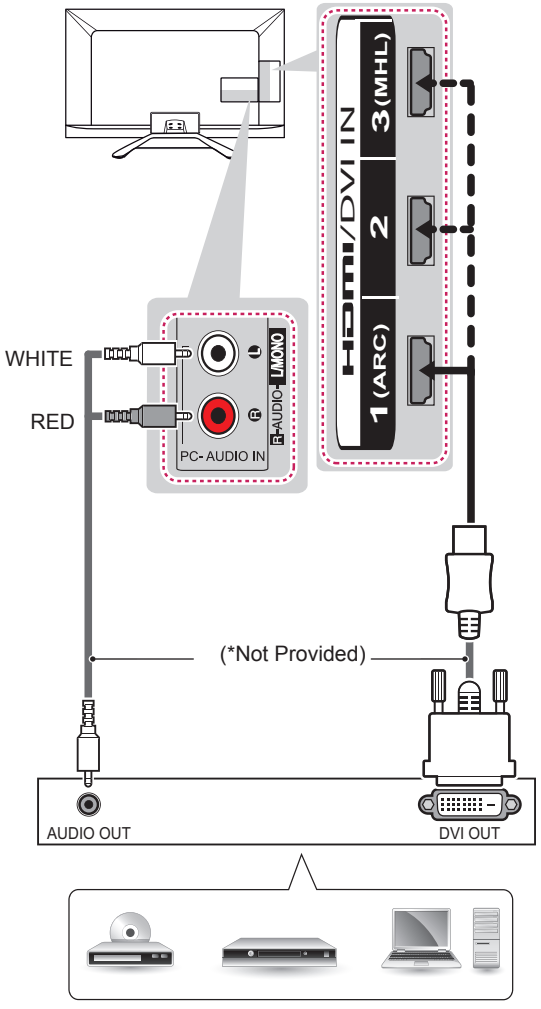

DVD/ Blu-Ray / HD Cable Box / PC

Transmits the digital video signal from an external device to the TV. Connect the external device and the TV with the DVI-HDMI cable as shown. To transmit an audio signal, connect an audio cable. Choose any HDMI input port to connect. It does not matter which port you use.

NOTE

- Depending on the graphics card, DOS mode may not work if a HDMI to DVI Cable is in use.
- When using the HDMI/DVI cable, only Single link is supported.

Component connection

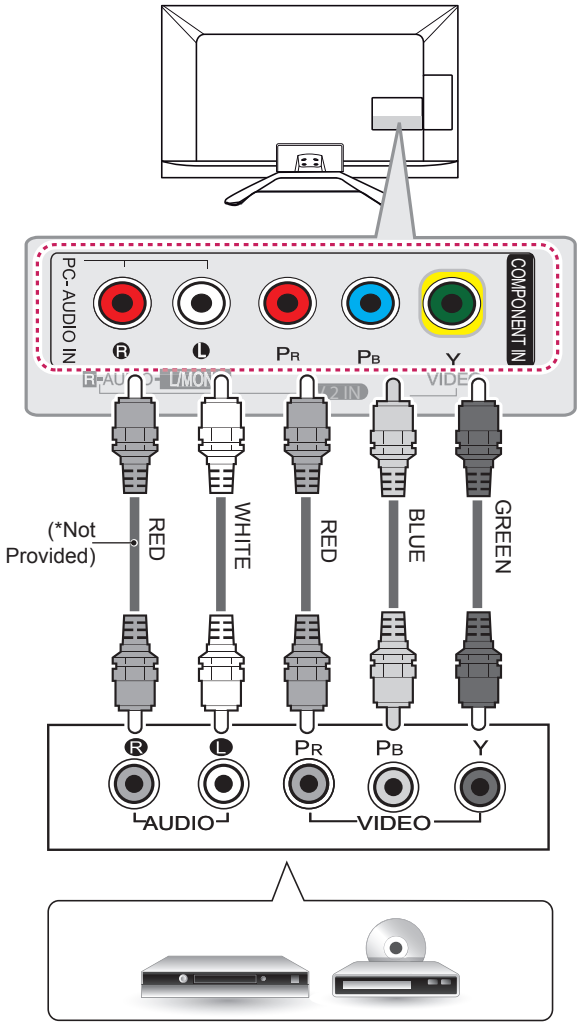

DVD / Blu-Ray / HD Cable Box

Transmits analog video and audio signals from an external device to the TV. Connect the external device and the TV with a component cable as shown.

NOTE

- If cables are not installed correctly, it could cause this image to display in black and white or with distorted colours.

Composite connection

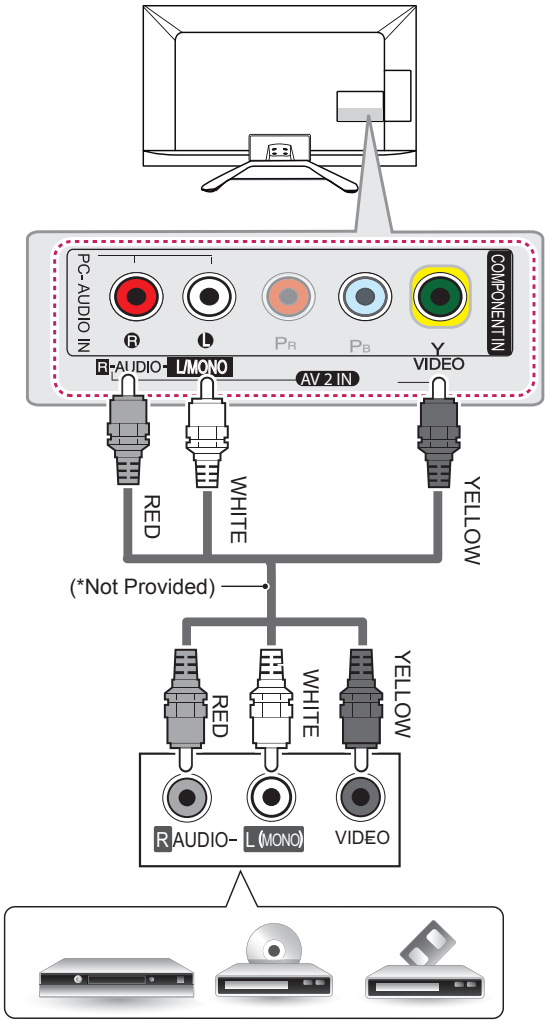

DVD/ Blu-Ray / HD Cable Box / VCR

Transmits analog video and audio signals from an external device to the TV. Connect the external device and the TV with the composite cable as shown.

MHL connection

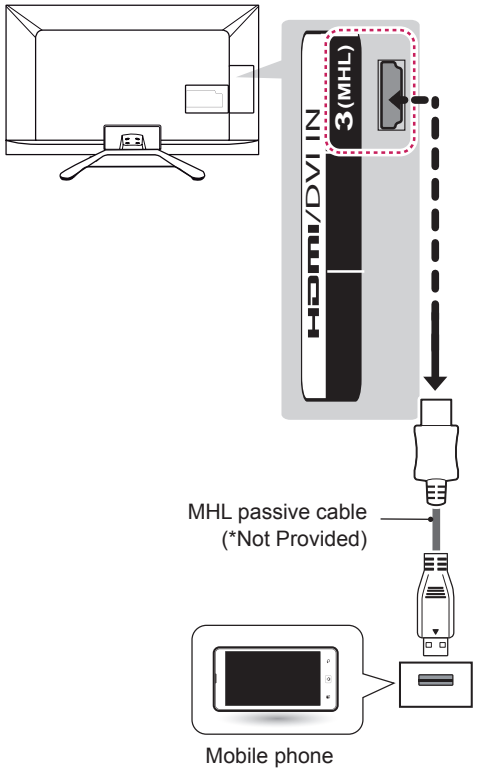

Mobile High-definition Link (MHL) is an interface for transmitting digital audiovisual signals from mobile phones to television sets.

NOTE

- Connect the mobile phone to the HDMI/DVI IN 3 (MHL) port to view the phone screen on the TV.
- The MHL passive cable is needed to connect the TV and a mobile phone.
- This only works for the MHL-enabled phone.
- Some applications can be operated by the remote control.
- For some mobile phones supporting MHL, you can control with the magic remote control.
- Remove the MHL passive cable from the TV when:
  - the MHL function is disabled
  - your mobile device is fully charged in standby mode

Audio connection

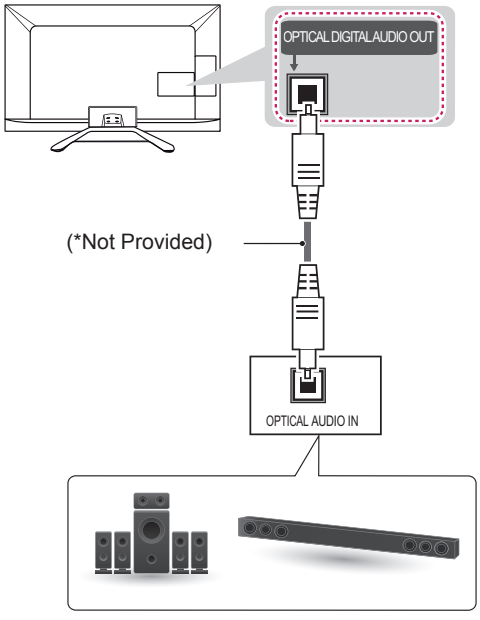

Digital Audio System / Sound Bar(Only 42/47LA669*)

You may use an optional external audio system instead of the built-in speaker.

Digital optical audio connection

Transmits a digital audio signal from the TV to an external device. Connect the external device and the TV with the optical audio cable as shown.

NOTE

- Do not look into the optical output port. Looking at the laser beam may damage your vision.
- Audio with ACP (Audio Copy Protection) function may block digital audio output.

USB connection

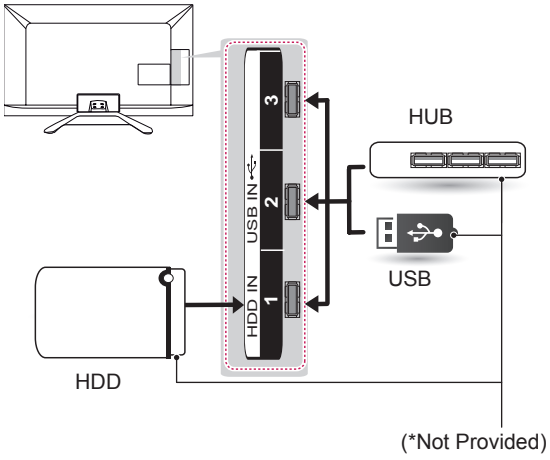

Connect a USB storage device such as a USB flash memory, external hard drive, or a USB memory card reader to the TV and access the Smart Share menu to use various multimedia files.

NOTE

- Some USB Hubs may not work. If a USB device connected using a USB Hub is not detected, connect it to the USB port on the TV directly.
- Connect the external power source if your USB is needed.

CI module connection

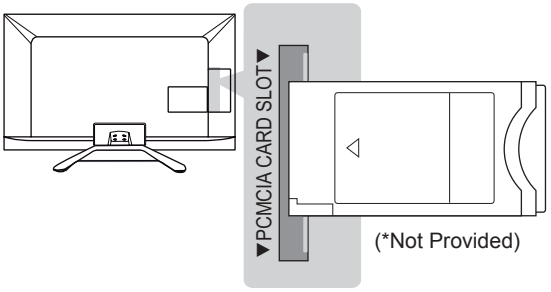

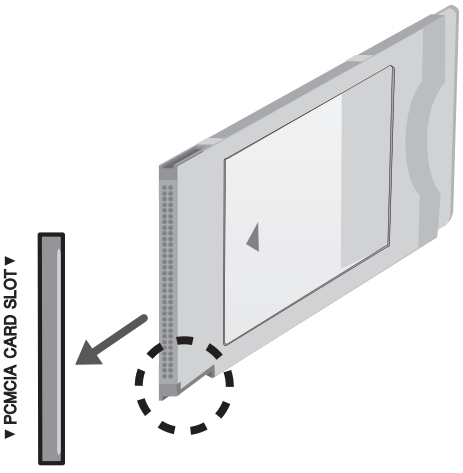

View the encrypted (pay) services in digital TV mode. This feature is not available in all countries.

NOTE

- Check if the CI module is inserted into the PCMCIA card slot in the right direction. If the module is not inserted properly, this can cause damage to the TV and the PCMCIA card slot.
- If the TV does not display any video and audio when CI+ CAM is connected, please contact to the Terrestrial/Cable/Satellite Service Operator.

Headphone connection

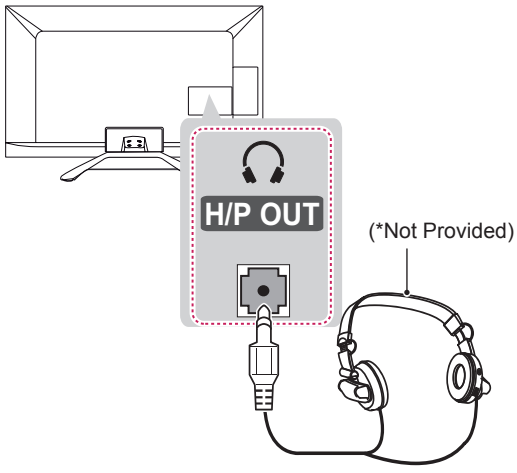

Transmits the headphone signal from the TV to an external device. Connect the external device and the TV with the headphone as shown.

NOTE

- AUDIO menu items are disabled when connecting a headphone.
- When changing AV MODE with a headphone connected, the change is applied to video but not to audio.(Depending on model)
- Optical Digital Audio Out is not available when connecting a headphone.
- Headphone impedance: 16 Ω
- Max audio output of headphone: 9mW to 15 mW
- Headphone jack size: 0.35 cm

Euro Scart connection

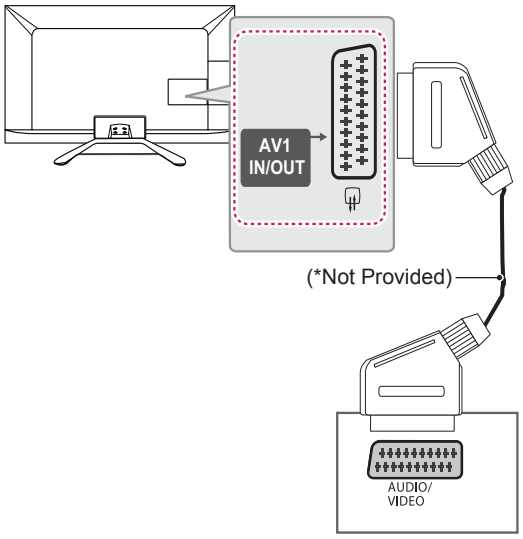

Transmits the video and audio signals from an external device to the TV set. Connect the external device and the TV set with the euro scart cable as shown.

Output Type / Current input mode	AV1 (TV Out[1])
Digital TV	Digital TV
Analogue TV, AV	Analogue TV
Component	
HDMI	

1 TV Out : Outputs Analogue TV or Digital TV signals.

NOTE

- Any Euro scart cable used must be signal shielded.
- When watching digital TV in 3D imaging mode, only 2D out signals can be output through the SCART cable. (Only 3D models)

REMOTE CONTROL

The descriptions in this manual are based on the buttons on the remote control.
Please read this manual carefully and use the TV correctly.
To replace batteries, open the battery cover, replace batteries (1.5 V AAA) matching the ⊕ and ⊖ ends to the label inside the compartment, and close the battery cover.
To remove the batteries, perform the installation actions in reverse.

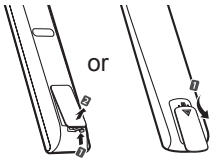

⚠ CAUTION

- Do not mix old and new batteries, as this may damage the remote control.

Make sure to point the remote control toward the remote control sensor on the TV.

(Only LA66**, LA69**, LA71**, LA74**, LN570*, LN575*, LN577*, LN578*, LN61**, LN65**)
(Depending on model)

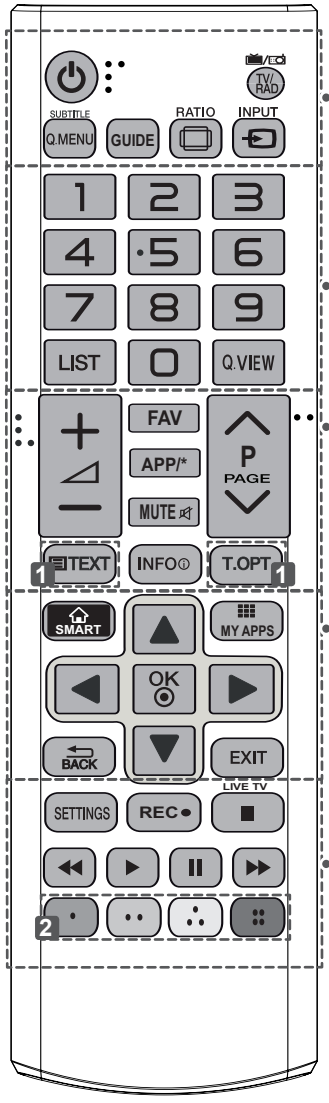

TV/RAD Selects Radio, TV and DTV programme.
SUBTITLE Recalls your preferred subtitle in digital mode.
Q. MENU Accesses the quick menus.
GUIDE Shows programme guide.
RATIO Resizes an image.
INPUT Changes the input source.

LIST Accesses the saved programme list.
Q.VIEW Returns to the previously viewed programme.

FAV Accesses your favourite programme list.
APP/* Select the MHP TV menu source. (Only Italy.) (Depending on model)
PAGE Moves to the previous or next screen.
1 TELETEXT BUTTONS These buttons are used for teletext.
INFO Views the information of the current programme and screen.

SMART Accesses the Smart Home menus.
MY APPS Shows the list of Apps.
Navigation buttons (up/down/left/right) Scrolls through menus or options.
OK Selects menus or options and confirms your input.
BACK Returns to the previous level.
EXIT Clears on-screen displays and return to TV viewing.

SETTINGS Accesses the main menus.
REC ● Start to record and display record menu.
LIVE TV Return to LIVE TV.
Control buttons (■, ▶, ❚❚, ◀◀, ▶▶) Controls the Premium contents, Time Machine or Smart Share menus or the SIMPLINK compatible devices (USB or SIMPLINK or Time Machine).
2 Colour buttons These access special functions in some menus.
(●: Red, ●●: Green, ●●●: Yellow, ●●●●: Blue)

ENGLISH

(Only LA62**, LA64**)

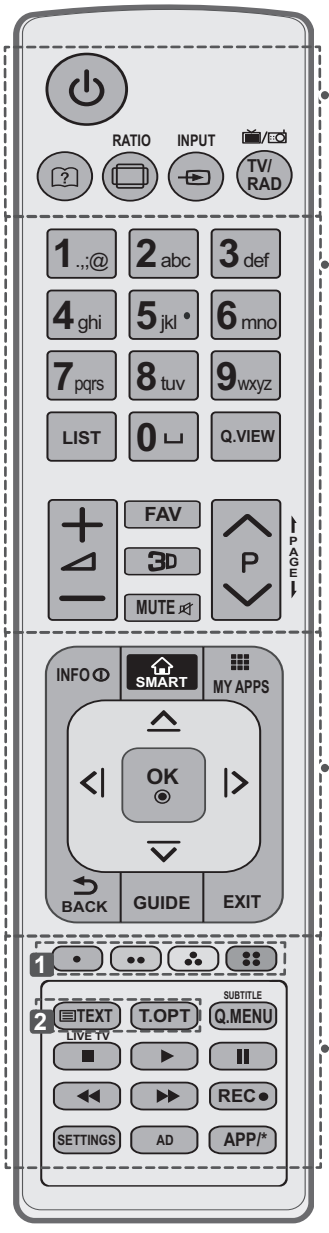

(User Guide) Sees user-guide.
RATIO Resizes an image.
INPUT Changes the input source.
TV/RAD Selects Radio, TV and DTV programme.

LIST Accesses the saved programme list.
(Space) Opens an empty space on the screen keyboard.
Q.VIEW Returns to the previously viewed programme.
FAV Accesses your favourite programme list.
3D Used for viewing 3D video.
PAGE Moves to the previous or next screen.

INFO Views the information of the current programme and screen.
SMART Accesses the Smart Home menus.
MY APPS Shows the list of Apps.
Navigation buttons (up/down/left/right) Scrolls through menus or options.
OK Selects menus or options and confirms your input.
BACK Returns to the previous level.
GUIDE Shows programme guide.
EXIT Clears on-screen displays and return to TV viewing.

1 **Colour buttons** These access special functions in some menus. (: Red, : Green, : Yellow, : Blue)

2 **TELETEXT BUTTONS** These buttons are used for teletext.
SUBTITLE Recalls your preferred subtitle in digital mode.
Q. MENU Accesses the quick menus.
LIVE TV Return to LIVE TV.
Control buttons (■, ▶, II, ◀◀, ▶▶) Controls the Premium contents, Time Machine or Smart Share menus or the SIMPLINK compatible devices (USB or SIMPLINK or Time Machine).
REC ● Start to record and display record menu.
SETTINGS Accesses the main menus.
AD Switches the Audio Description On or Off.
APP/* Select the MHP TV menu source. (Only Italy.) (Depending on model)

ENGLISH

MAGIC REMOTE CONTROL FUNCTIONS

This item is not included for all models.

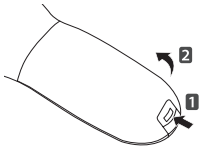

When the message “Magic Remote Control battery is low. Change the battery.” is displayed, replace the battery.
To replace batteries, open the battery cover, replace batteries (1.5 V AA) matching ⊕ and ⊖ ends to the label inside the compartment, and close the battery cover. Be sure to point the remote control toward the remote control sensor on the TV.
To remove the batteries, perform the installation actions in reverse.

⚠ CAUTION

- Do not mix old and new batteries, as this may damage the remote control.

(Only LA66**, LA69** , LA71**, LA74**, LN578* , LN65**)

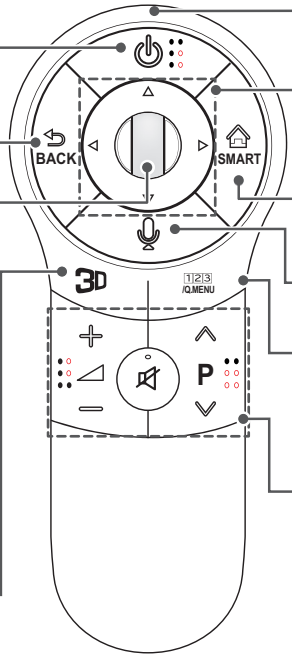

(POWER)
Turns the TV on or off.

BACK
Returns to the previous level.

Wheel(OK)
Selects menus or options and confirms your input.
Scrolls through the saved programmes.
If you press the navigation button while moving the pointer on the screen, the pointer disappears, and the Magic Remote Control works as a regular remote control.
To display the pointer again, shake the Magic Remote Control from side to side.

3D
Used for viewing 3D video. (Depending on model)

Pointer (RF transmitter)

Navigation buttons (up/down/left/right)
Scrolls through menus or options.

SMART
Accesses the Smart Home menus.

Voice recognition
(Depending on model)

1 2 3 /Q.MENU
Accesses the quick menus.
Accesses the Universal Control.
(This feature is not available in all countries.)

+ -
Adjusts the volume level.

P
Scrolls through the saved programmes or channels.

MUTE
Mutes all sounds.

Voice recognition(Depending on model)
Network connection is required to use the voice recognition function.
The recognition rate may vary depending on the user’s characteristics (voice, pronunciation, intonation and speed) and the environment (noise and TV volume).

1. Press the Voice recognition button.
2. Speak when the voice display window appears on the left of the TV screen.
   - The voice recognition may fail when you speak too fast or too slow.
   - Use the Magic remote control no further than 10 cm from your face.

ENGLISH

Registering Magic Remote Control

It is necessary to 'pair' (register) the magic remote control to your TV before it will work.

How to register the Magic Remote Control

	1 To register automatically, turn the TV on and press the **Wheel(OK)** button. When registration is completed, the completion message appears on the screen. 2 If registration fails, turn the TV off and back on, then press the **Wheel(OK)** button to complete registration.

How to re-register the Magic Remote Control

BACK **SMART**	1 Press and hold the **BACK** and **SMART** buttons together for 5 seconds to reset, then register it by following "How to register the Magic Remote Control" above. 2 To re-register the Magic Remote Control, press and hold the **BACK** button for 5 seconds toward the TV. When registration is completed, the completion message appears on the screen.

How to use Magic Remote Control

	1 If the pointer disappears, move the Magic Remote Control slightly to left or right. Then, it will automatically appear on the screen. » If the pointer has not been used for a certain period of time, it will disappear. 2 You can move the pointer by aiming the Pointer Receiver of the Magic Remote Control at your TV then move it left, right, up or down. » If the pointer does not work properly, leave the Magic Remote Control for 10 seconds then use it again.



1	If you press **Wheel(OK)** on the Magic Remote Control, the following screen appears. Shows information about the current programme and screen.
2	You can select More Menu.

Precautions to Take when Using the Magic Remote Control

- Use the Magic Remote Control within the maximum communication distance (10 m). Using the Magic Remote Control beyond this distance, or with an object obstructing it, may cause a communication failure.
- A communication failure may occur due to nearby devices. Electrical devices such as a microwave oven or wireless LAN product may cause interference, as these use the same bandwidth (2.4 GHz) as the Magic Remote Control.
- The Magic Remote Control may be damaged or may malfunction if it is dropped or receives a heavy impact.
- Take care not to bump into nearby furniture or other people when using the Magic Remote Control.
- Manufacturer and installer cannot provide service related to human safety as the applicable wireless device has possibility of electric wave interference.
- It is recommended that an Access Point (AP) be located more than 1 m away from the TV. If the AP is installed closer than 1 m, the Magic Remote Control may not perform as expected due to frequency interference.

USING THE USER GUIDE

User Guide allows you to more easily access the detailed TV information.

1 Press the **SMART** ⌂ button to access the Smart Home menu.
2 Select **User Guide** and press **Wheel(OK)**.

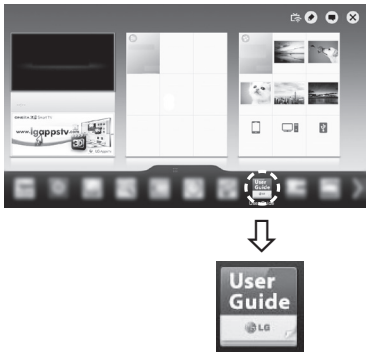

User Guide

NOTE

- You can also access the User Guide by pressing ?(**User Guide**) in the remote control.(Only LA62**, LA64**)

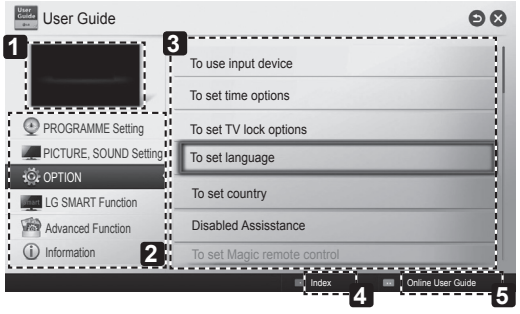

1 Shows the current watching programme or input source screen.

2 Allows to select the category you want.

3 Allows to select the item you want.
You can use ∧/∨ to move between pages.

4 Allows to browse the description of the function you want from the index.

5 Provides the detailed information on the functions of LG Smart TV when the Internet is connected.
(It may not be available depending on the country/language.)

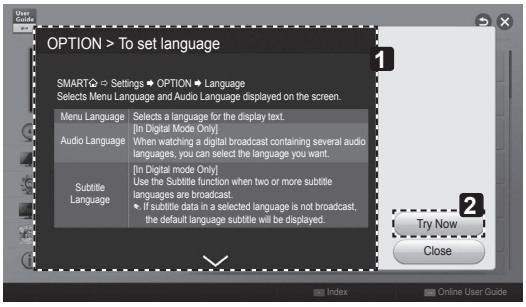

1 Shows the description of the selected menu. You can use ∧/∨ to move between pages.

2 Moves to the selected menu directly from the User Guide.

MAINTENANCE

Cleaning your TV

Clean your TV regularly to keep the best performance and to extend the product lifespan.

CAUTION

- Make sure to turn the power off and disconnect the power cord and all other cables first.
- When the TV is left unattended and unused for a long time, disconnect the power cord from the wall outlet to prevent possible damage from lightning or power surges.

Screen, frame, cabinet and stand

- To remove dust or light dirt, wipe the surface with a dry, clean, and soft cloth.
- To remove major dirt, wipe the surface with a soft cloth dampened in clean water or a diluted mild detergent. Then wipe immediately with a dry cloth.

CAUTION

- Avoid touching the screen at all times, as this may result in damage to the screen.
- Do not push, rub, or hit the screen surface with your fingernail or a sharp object, as this may result in scratches and image distortions.
- Do not use any chemicals as this may damage the product.
- Do not spray liquid onto the surface. If water enters the TV, it may result in fire, electric shock, or malfunction.

Power cord

Remove the accumulated dust or dirt on the power cord regularly.

TROUBLESHOOTING

Problem	Solution
Cannot control the TV with the remote control.	• Check the remote control sensor on the product and try again. • Check if there is any obstacle between the product and the remote control. • Check if the batteries are still working and properly installed (⊕ to ⊕, ⊖ to ⊖).
No image display and no sound is produced.	• Check if the product is turned on. • Check if the power cord is connected to a wall outlet. • Check if there is a problem in the wall outlet by connecting other products.
The TV turns off suddenly.	• Check the power control settings. The power supply may be interrupted. • Check if the Auto sleep feature is activated in the Time settings. • If there is no signal while the TV is on, the TV will turn off automatically after 15 minutes of inactivity.
When connecting to the PC (HDMI DVI), 'No signal' or 'Invalid Format' is displayed.	• Turn the TV off/on using the remote control. • Reconnect the HDMI cable. • Restart the PC with the TV on.

EXTERNAL CONTROL DEVICE SETUP

To obtain the external control device setup information, please visit *www.lg.com*

SPECIFICATIONS

(Only LA66**, LA69** , LA71**, LA74**, LN578* , LN65**)

Bluetooth module (BM-LDS401) specification	
Standard	Bluetooth Version 3.0
Frequency Range	2400 ~ 2483.5 MHz
Output Power (Max.)	10 dBm or lower

- Because band channel used by the country could be different, the user can not change or adjust the operating frequency and this product is set for the regional frequency table.

CE 0197 !

(Only LA62**, LA64**, LA66**, LA69**, LA71**, LA74**, LN575*, LN577*, LN578*, LN61**, LN65**)

Wireless LAN module(TWFM-B006D) specification	
Standard	IEEE802.11a/b/g/n
Frequency Range	2400 to 2483.5 MHz 5150 to 5250 MHz 5725 to 5850 MHz (for Non EU)
Output Power (Max.)	802.11a: 11 dBm 802.11b: 14 dBm 802.11g: 10.5 dBm 802.11n - 2.4GHz: 11 dBm 802.11n - 5GHz: 12.5 dBm
• Because band channel used by the country could be different, the user can not change or adjust the operating frequency and this product is set for the regional frequency table. CE 0197 !	

Product specifications may be changed without prior notice due to upgrade of product functions.
For the power supply and power consumption, refer to the label attached to the product.

MODELS		32LA62**	39LA62**	42LA62**
		32LA6208-ZA 32LA620S-ZA 32LA620V-ZA 32LA6218-ZD 32LA621S-ZD 32LA621V-ZD	39LA6208-ZA 39LA620S-ZA 39LA620V-ZA 39LA6218-ZD 39LA621S-ZD 39LA621V-ZD	42LA6208-ZA 42LA620S-ZA 42LA620V-ZA 42LA6218-ZD 42LA621S-ZD 42LA621V-ZD
Dimensions (W x H x D)	With stand (mm)	733 x 499 x 242	890 x 592 x 294	964 x 631 x 294
	Without stand(mm)	733 x 444 x 78	890 x 530 x 78	964 x 573 x 78
Weight	With stand (kg)	7.6	10.7	11.8
	Without stand (kg)	6.4	8.9	10.0
Power requirement		AC 100-240 V~ 50 / 60 Hz	AC 100-240 V~ 50 / 60 Hz	AC 100-240 V~ 50 / 60 Hz
Power consumption		80 W	110 W	110 W
MODELS		**47LA62****	**50LA62****	**55LA62****
		47LA6208-ZA 47LA620S-ZA 47LA620V-ZA 47LA6218-ZD 47LA621S-ZD 47LA621V-ZD	50LA6208-ZA 50LA620S-ZA 50LA620V-ZA 50LA6218-ZD 50LA621S-ZD 50LA621V-ZD	55LA6208-ZA 55LA620S-ZA 55LA620V-ZA 55LA6218-ZD 55LA621S-ZD 55LA621V-ZD
Dimensions (W x H x D)	With stand (mm)	1076 x 695 x 327	1131 x 725 x 327	1246 x 803 x 343
	Without stand(mm)	1076 x 637 x 79.4	1131 x 667 x 80.9	1246 x 732 x 77.2
Weight	With stand (kg)	15.0	17.0	21.5
	Without stand (kg)	12.8	14.5	18.7
Power requirement		AC 100-240 V~ 50 / 60 Hz	AC 100-240 V~ 50 / 60 Hz	AC 100-240 V~ 50 / 60 Hz
Power consumption		130 W	140 W	160 W

MODELS		60LA62**
		60LA6208-ZA 60LA620S-ZA 60LA620V-ZA 60LA6218-ZD 60LA621S-ZD 60LA621V-ZD
Dimensions (W x H x D)	With stand (mm)	1355 x 865 x 343
	Without stand(mm)	1355 x 793 x 65.3
Weight	With stand (kg)	25.9
	Without stand (kg)	23.1
Power requirement		AC 100-240 V~ 50 / 60 Hz
Power consumption		180 W

MODELS		**32LA64****	**42LA64****	**47LA64****
		32LA6400-ZA 32LA6408-ZA 32LA640S-ZA 32LA640V-ZA 32LA6418-ZB 32LA641S-ZB 32LA641V-ZB 32LA6418-ZC 32LA641S-ZC 32LA641V-ZC 32LA6448-ZA 32LA644S-ZA 32LA644V-ZA 32LA6458-ZC 32LA645S-ZC 32LA645V-ZC	42LA6400-ZA 42LA6408-ZA 42LA640S-ZA 42LA640V-ZA 42LA6418-ZB 42LA641S-ZB 42LA641V-ZB 42LA6418-ZC 42LA641S-ZC 42LA641V-ZC 42LA6448-ZA 42LA644S-ZA 42LA644V-ZA 42LA6458-ZC 42LA645S-ZC 42LA645V-ZC	47LA6400-ZA 47LA6408-ZA 47LA640S-ZA 47LA640V-ZA 47LA6418-ZB 47LA641S-ZB 47LA641V-ZB 47LA6418-ZC 47LA641S-ZC 47LA641V-ZC 47LA6448-ZA 47LA644S-ZA 47LA644V-ZA 47LA6458-ZC 47LA645S-ZC 47LA645V-ZC
Dimensions (W x H x D)	With stand (mm)	743 x 518 x 241	973 x 652 x 294	1086 x 711 x 327
	Without stand(mm)	743 x 461 x 36.4	973 x 591 x 36.3	1086 x 654 x 36.3
Weight	With stand (kg)	9.2	14.2	17.5
	Without stand (kg)	8.0	12.4	15.0
Power requirement		AC 100-240 V~ 50 / 60 Hz	AC 100-240 V~ 50 / 60 Hz	AC 100-240 V~ 50 / 60 Hz
Power consumption		90 W	110 W	120 W
MODELS		**50LA64****	**55LA64****	**60LA64****
		50LA6400-ZA 50LA6408-ZA 50LA640S-ZA 50LA640V-ZA 50LA6418-ZB 50LA641S-ZB 50LA641V-ZB 50LA6418-ZC 50LA641S-ZC 50LA641V-ZC 50LA6448-ZA 50LA644S-ZA 50LA644V-ZA 50LA6458-ZC 50LA645S-ZC 50LA645V-ZC	55LA6400-ZA 55LA6408-ZA 55LA640S-ZA 55LA640V-ZA 55LA6418-ZB 55LA641S-ZB 55LA641V-ZB 55LA6418-ZC 55LA641S-ZC 55LA641V-ZC 55LA6448-ZA 55LA644S-ZA 55LA644V-ZA 55LA6458-ZC 55LA645S-ZC 55LA645V-ZC	60LA6400-ZA 60LA6408-ZA 60LA640S-ZA 60LA640V-ZA 60LA6418-ZB 60LA641S-ZB 60LA641V-ZB 60LA6418-ZC 60LA641S-ZC 60LA641V-ZC 60LA6448-ZA 60LA644S-ZA 60LA644V-ZA 60LA6458-ZC 60LA645S-ZC 60LA645V-ZC
Dimensions (W x H x D)	With stand (mm)	1137 x 732 x 327	1260 x 821 x 343	1393 x 884 x 326
	Without stand(mm)	1137 x 677 x 37.2	1260 x 753 x 36.3	1393 x 834 x 41.4
Weight	With stand (kg)	19.2	24.2	29.7
	Without stand (kg)	16.7	21.5	27.0
Power requirement		AC 100-240 V~ 50 / 60 Hz	AC 100-240 V~ 50 / 60 Hz	AC 100-240 V~ 50 / 60 Hz
Power consumption		130 W	140 W	180 W

MODELS		32LA66**	42LA66**	47LA66**
		32LA6608-ZA 32LA660S-ZA 32LA660V-ZA 32LA6628-ZC 32LA662S-ZC 32LA662V-ZC 32LA6678-ZB 32LA667S-ZB 32LA667V-ZB 32LA6698-ZE 32LA669S-ZE 32LA669V-ZE	42LA6608-ZA 42LA660S-ZA 42LA660V-ZA 42LA6628-ZC 42LA662S-ZC 42LA662V-ZC 42LA6678-ZB 42LA667S-ZB 42LA667V-ZB 42LA6698-ZE 42LA669S-ZE 42LA669V-ZE	47LA6608-ZA 47LA660S-ZA 47LA660V-ZA 47LA6628-ZC 47LA662S-ZC 47LA662V-ZC 47LA6678-ZB 47LA667S-ZB 47LA667V-ZB 47LA6698-ZE 47LA669S-ZE 47LA669V-ZE
Dimensions (W x H x D)	With stand (mm)	725 x 501 x 241	957 x 635 x 294	1069 x 695 x 327
	Without stand(mm)	725 x 443 x 37.1	957 x 574 x 35	1069 x 637 x 35
Weight	With stand (kg)	8.7	14.3	17.2
	Without stand (kg)	7.5	12.4	14.7
Power requirement		AC 100-240 V~ 50 / 60 Hz	AC 100-240 V~ 50 / 60 Hz	AC 100-240 V~ 50 / 60 Hz
Power consumption		90 W	110 W	120 W
MODELS		50LA66**	55LA66**	42LA69**
		50LA6608-ZA 50LA660S-ZA 50LA660V-ZA 50LA6628-ZC 50LA662S-ZC 50LA662V-ZC 50LA6678-ZB 50LA667S-ZB 50LA667V-ZB 50LA6698-ZE 50LA669S-ZE 50LA669V-ZE	55LA6608-ZA 55LA660S-ZA 55LA660V-ZA 55LA6628-ZC 55LA662S-ZC 55LA662V-ZC 55LA6678-ZB 55LA667S-ZB 55LA667V-ZB 55LA6698-ZE 55LA669S-ZE 55LA669V-ZE	42LA6908-ZA 42LA690S-ZA 42LA690V-ZA 42LA6908-ZB 42LA690S-ZB 42LA690V-ZB 42LA6918-ZA 42LA691S-ZA 42LA691V-ZA 42LA6928-ZC 42LA692S-ZC 42LA692V-ZC
Dimensions (W x H x D)	With stand (mm)	1129 x 730 x 326	1238 x 802 x 343	951 x 634 x 269
	Without stand(mm)	1129 x 672 x 37.2	1238 x 733 x 35.2	951 x 564 x 34.5
Weight	With stand (kg)	19.8	22.7	14.3
	Without stand (kg)	17.3	20.0	12.2
Power requirement		AC 100-240 V~ 50 / 60 Hz	AC 100-240 V~ 50 / 60 Hz	AC 100-240 V~ 50 / 60 Hz
Power consumption		130 W	140 W	110 W

MODELS		47LA69**	55LA69**	47LA71**
		47LA6908-ZA 47LA690S-ZA 47LA690V-ZA 47LA6908-ZB 47LA690S-ZB 47LA690V-ZB 47LA6918-ZA 47LA691S-ZA 47LA691V-ZA 47LA6928-ZC 47LA692S-ZC 47LA692V-ZC	55LA6908-ZA 55LA690S-ZA 55LA690V-ZA 55LA6908-ZB 55LA690S-ZB 55LA690V-ZB 55LA6918-ZA 55LA691S-ZA 55LA691V-ZA 55LA6928-ZC 55LA692S-ZC 55LA692V-ZC	47LA7108-ZA 47LA710S-ZA 47LA710V-ZA
Dimensions (W x H x D)	With stand (mm)	1063 x 697 x 269	1233 x 793 x 316	1069.1 x 699.4 x 326
	Without stand(mm)	1063 x 627 x 34.5	1233 x 723 x 34.7	1069.1 x 631.2 x 56.8
Weight	With stand (kg)	16.7	22.8	17.8
	Without stand (kg)	14.6	20.0	15.3
Power requirement		AC 100-240 V~ 50 / 60 Hz	AC 100-240 V~ 50 / 60 Hz	AC 100-240 V~ 50 / 60 Hz
Power consumption		120 W	140 W	130 W
MODELS		55LA71**	42LA74**	47LA74**
		55LA7108-ZA 55LA710S-ZA 55LA710V-ZA	42LA7408-ZA 42LA740S-ZA 42LA740V-ZA 42LA7408-ZB 42LA740S-ZB 42LA740V-ZB 42LA7418-ZA 42LA741S-ZA 42LA741V-ZA	47LA7408-ZA 47LA740S-ZA 47LA740V-ZA 47LA7408-ZB 47LA740S-ZB 47LA740V-ZB 47LA7418-ZA 47LA741S-ZA 47LA741V-ZA
Dimensions (W x H x D)	With stand (mm)	1239 x 802 x 343	951 x 634 x 269	1063 x 697 x 269
	Without stand(mm)	1239 x 728 x 41.9	951 x 564 x 34.5	1063 x 627 x 34.5
Weight	With stand (kg)	22.8	14.3	16.7
	Without stand (kg)	19.9	12.2	14.6
Power requirement		AC 100-240 V~ 50 / 60 Hz	AC 100-240 V~ 50 / 60 Hz	AC 100-240 V~ 50 / 60 Hz
Power consumption		160 W	110 W	120 W
MODELS		55LA74**	60LA74**	32LN57**
		55LA7408-ZA 55LA740S-ZA 55LA740V-ZA 55LA7408-ZB 55LA740S-ZB 55LA740V-ZB 55LA7418-ZA 55LA741S-ZA 55LA741V-ZA	60LA7408-ZA 60LA740S-ZA 60LA740V-ZA 60LA7408-ZB 60LA740S-ZB 60LA740V-ZB 60LA7418-ZA 60LA741S-ZA 60LA741V-ZA	32LN5707-ZA 32LN5708-ZA 32LN570R-ZA 32LN570S-ZA 32LN570U-ZA 32LN570V-ZA
Dimensions (W x H x D)	With stand (mm)	1233 x 793 x 316	1352 x 848 x 316	738 x 497 x 207
	Without stand(mm)	1233 x 723 x 34.7	1352 x 794 x 59.9	738 x 449 x 79
Weight	With stand (kg)	22.8	27.6	7.0
	Without stand (kg)	20.0	24.8	6.4
Power requirement		AC 100-240 V~ 50 / 60 Hz	AC 100-240 V~ 50 / 60 Hz	AC 100-240 V~ 50 / 60 Hz
Power consumption		140 W	180 W	80 W

MODELS		39LN57**	42LN57**	47LN57**
		39LN5707-ZA 39LN5708-ZA 39LN570R-ZA 39LN570S-ZA 39LN570U-ZA 39LN570V-ZA	42LN5707-ZA 42LN5708-ZA 42LN570R-ZA 42LN570S-ZA 42LN570U-ZA 42LN570V-ZA	47LN5707-ZA 47LN5708-ZA 47LN570R-ZA 47LN570S-ZA 47LN570U-ZA 47LN570V-ZA
Dimensions (W x H x D)	With stand (mm)	894 x 587 x 236	968 x 629 x 236	1080 x 694 x 264
	Without stand(mm)	894 x 537 x 79	968 x 579 x 79	1080 x 642 x 80.5
Weight	With stand (kg)	9.7	10.7	14.7
	Without stand (kg)	8.6	9.6	13.4
Power requirement		AC 100-240 V~ 50 / 60 Hz	AC 100-240 V~ 50 / 60 Hz	AC 100-240 V~ 50 / 60 Hz
Power consumption		100 W	110 W	130 W
MODELS		50LN57**	55LN57**	60LN57**
		50LN5707-ZA 50LN5708-ZA 50LN570R-ZA 50LN570S-ZA 50LN570U-ZA 50LN570V-ZA	55LN5707-ZA 55LN5708-ZA 55LN570R-ZA 55LN570S-ZA 55LN570U-ZA 55LN570V-ZA	60LN5707-ZA 60LN5708-ZA 60LN570R-ZA 60LN570S-ZA 60LN570U-ZA 60LN570V-ZA
Dimensions (W x H x D)	With stand (mm)	1136 x 727 x 264	1250 x 790 x 297	1359 x 852 x 297
	Without stand(mm)	1136 x 673 x 82.1	1250 x 737 x 79.1	1359 x 799 x 67.2
Weight	With stand (kg)	15.6	21.2	26.3
	Without stand (kg)	14.2	19.1	24.2
Power requirement		AC 100-240 V~ 50 / 60 Hz	AC 100-240 V~ 50 / 60 Hz	AC 100-240 V~ 50 / 60 Hz
Power consumption		140 W	160 W	200 W
MODELS		32LN57**	39LN57**	42LN57**
		32LN5708-ZE 32LN570S-ZE 32LN570V-ZE 32LN5758-ZE 32LN575S-ZE 32LN575V-ZE 32LN5757-ZE 32LN575R-ZE 32LN575U-ZE 32LN5778-ZK 32LN577S-ZK 32LN577V-ZK 32LN5788-ZE 32LN578S-ZE 32LN578V-ZE	39LN5708-ZE 39LN570S-ZE 39LN570V-ZE 39LN5758-ZE 39LN575S-ZE 39LN575V-ZE 39LN5757-ZE 39LN575R-ZE 39LN575U-ZE 39LN5778-ZK 39LN577S-ZK 39LN577V-ZK 39LN5788-ZE 39LN578S-ZE 39LN578V-ZE	42LN5708-ZE 42LN570S-ZE 42LN570V-ZE 42LN5758-ZE 42LN575S-ZE 42LN575V-ZE 42LN5757-ZE 42LN575R-ZE 42LN575U-ZE 42LN5778-ZK 42LN577S-ZK 42LN577V-ZK 42LN5788-ZE 42LN578S-ZE 42LN578V-ZE
Dimensions (W x H x D)	With stand (mm)	738 x 502 x 242	894 x 595 x 294	968 x 637 x 294
	Without stand(mm)	738 x 449 x 79	894 x 537 x 79	968 x 579 x 79
Weight	With stand (kg)	7.6	10.4	11.4
	Without stand (kg)	7.0	8.6	9.6
Power requirement		AC 100-240 V~ 50 / 60 Hz	AC 100-240 V~ 50 / 60 Hz	AC 100-240 V~ 50 / 60 Hz
Power consumption		80 W	100 W	110 W

MODELS		47LN57**	50LN57**	55LN57**
		47LN5708-ZE 47LN570S-ZE 47LN570V-ZE 47LN5758-ZE 47LN575S-ZE 47LN575V-ZE 47LN5757-ZE 47LN575R-ZE 47LN575U-ZE 47LN5778-ZK 47LN577S-ZK 47LN577V-ZK 47LN5788-ZE 47LN578S-ZE 47LN578V-ZE	50LN5708-ZE 50LN570S-ZE 50LN570V-ZE 50LN5758-ZE 50LN575S-ZE 50LN575V-ZE 50LN5757-ZE 50LN575R-ZE 50LN575U-ZE 50LN5778-ZK 50LN577S-ZK 50LN577V-ZK 50LN5788-ZE 50LN578S-ZE 50LN578V-ZE	55LN5708-ZE 55LN570S-ZE 55LN570V-ZE 55LN5758-ZE 55LN575S-ZE 55LN575V-ZE 55LN5757-ZE 55LN575R-ZE 55LN575U-ZE 55LN5778-ZK 55LN577S-ZK 55LN577V-ZK 55LN5788-ZE 55LN578S-ZE 55LN578V-ZE
Dimensions (W x H x D)	With stand (mm)	1080 x 701 x 327	1136 x 732 x 327	1250 x 804 x 343
	Without stand(mm)	1080 x 642 x 80.5	1136 x 673 x 82.1	1250 x 737 x 79.1
Weight	With stand (kg)	15.9	16.8	21.9
	Without stand (kg)	13.4	14.2	19.1
Power requirement		AC 100-240 V~ 50 / 60 Hz	AC 100-240 V~ 50 / 60 Hz	AC 100-240 V~ 50 / 60 Hz
Power consumption		130 W	140 W	160 W
MODELS		**60LN57****	**32LN61****	**42LN61****
		60LN5708-ZE 60LN570S-ZE 60LN570V-ZE 60LN5758-ZE 60LN575S-ZE 60LN575V-ZE 60LN5757-ZE 60LN575R-ZE 60LN575U-ZE 60LN5778-ZK 60LN577S-ZK 60LN577V-ZK 60LN5788-ZE 60LN578S-ZE 60LN578V-ZE	32LN6108-ZB 32LN610S-ZB 32LN610V-ZB 32LN6138-ZB 32LN613S-ZB 32LN613V-ZB	42LN6108-ZB 42LN610S-ZB 42LN610V-ZB 42LN6138-ZB 42LN613S-ZB 42LN613V-ZB
Dimensions (W x H x D)	With stand (mm)	1359 x 867 x 343	733 x 499 x 242	964 x 631 x 294
	Without stand(mm)	1359 x 799 x 67.2	733 x 444 x 78	964 x 573 x 78
Weight	With stand (kg)	27.0	7.6	11.8
	Without stand (kg)	24.2	6.4	10.0
Power requirement		AC 100-240 V~ 50 / 60 Hz	AC 100-240 V~ 50 / 60 Hz	AC 100-240 V~ 50 / 60 Hz
Power consumption		200 W	80 W	110 W

MODELS		47LN61**	32LN65**	42LN65**
		47LN6108-ZB 47LN610S-ZB 47LN610V-ZB 47LN6138-ZB 47LN613S-ZB 47LN613V-ZB	32LN6558-ZD 32LN655S-ZD 32LN655V-ZD	42LN6558-ZD 42LN655S-ZD 42LN655V-ZD
Dimensions (W x H x D)	With stand (mm)	1076 x 695 x 327	725 x 501 x 241	957 x 635 x 294
	Without stand(mm)	1076 x 637 x 79.4	725 x 443 x 37.1	957 x 574 x 35
Weight	With stand (kg)	15.0	8.7	14.3
	Without stand (kg)	12.8	7.5	12.4
Power requirement		AC 100-240 V~ 50 / 60 Hz	AC 100-240 V~ 50 / 60 Hz	AC 100-240 V~ 50 / 60 Hz
Power consumption		130 W	90 W	110 W

CI Module Size (W x H x D)		100.0 mm x 55.0 mm x 5.0 mm
Environment condition	Operating Temperature	0 °C to 40 °C
	Operating Humidity	Less than 80 %
	Storage Temperature	-20 °C to 60 °C
	Storage Humidity	Less than 85 %

	Digital TV	Analogue TV
Television system	DVB-T(*DVB-T/T2) DVB-C DVB-S/S2	PAL/SECAM B/G/I/D/K SECAM L/L’
Programme coverage	VHF, UHF C-Band, Ku-Band	VHF: E2 to E12, UHF : E21 to E69, CATV: S1 to S20, HYPER: S21 to S47
Maximum number of storable programmes	DVB-S/S2 : 6,000 DVB-T/T2/C & Analogue TV : 1,500	
External antenna impedance	75 Ω	

* : Only DVB-T2 support models

HDMI/DVI-DTV supported mode

Resolution	Horizontal Frequency (kHz)	Vertical Frequency (Hz)
640X480	31.469 / 31.5	59.94 / 60
720X480	31.469 / 31.5	59.94 / 60
720X576	31.25 15.625	50 50
1280X720	37.500 44.96 / 45	50 59.94 / 60
1920X1080	33.72 / 33.75 28.125 26.97 / 27 33.716 / 33.75 56.250 67.43 / 67.5	59.94 / 60 25 / 50.00 23.97 / 24 29.976 / 30.00 50 59.94 / 60

HDMI/DVI-PC supported mode

Resolution	Horizontal Frequency (kHz)	Vertical Frequency (Hz)
640 x 350	31.468	70.09
720 x 400	31.469	70.08
640 x 480	31.469	59.94
800 x 600	37.879	60.31
1024 x 768	48.363	60.00
1152 x 864	54.348	60.053
1360 x 768	47.712	60.015
1280 x 1024	63.981	60.020
1920 x 1080	67.5	60.00

Except for 32LN57*U/ 32LN57*R/ 32LN57*7

Component port connecting information

Component ports on the TV	Y	P_B	P_R

Video output ports on DVD player	Y	P_B	P_R
	Y	B-Y	R-Y
	Y	Cb	Cr
	Y	Pb	Pr

Signal	Component
480i/576i	O
480p/576p	O
720p/1080i	O
1080p	O (50 Hz / 60 Hz only)

3D supported mode

- Video, which is input as below media contents is switched into the 3D screen automatically.
- The method for 3D digital broadcast may differ depending on the signal environment. If video is not switched automatically into 3D, manually convert the settings to view 3D images.

<table>
<tr><th colspan="5">3D supported mode automatically</th></tr>
<tr><th>Input</th><th>Signal</th><th>Horizontal Frequency (kHz)</th><th>Vertical Frequency (Hz)</th><th>Playable 3D video format</th></tr>
<tr><td rowspan="20">HDMI</td><td rowspan="2">640 X 480</td><td>31.469 / 31.5</td><td rowspan="4">59.94 / 60</td><td>Top & Bottom,
Side by Side(Half), Side by Side(Full)</td></tr>
<tr><td>62.938 / 63</td><td>Frame Packing, Line Alternative</td></tr>
<tr><td rowspan="2">480p</td><td>31.469 / 31.5</td><td>Top & Bottom,
Side by Side(Half), Side by Side(Full)</td></tr>
<tr><td>62.938 / 63</td><td>Frame Packing, Line Alternative</td></tr>
<tr><td rowspan="2">576p</td><td>31.25</td><td rowspan="2">50</td><td>Top & Bottom,
Side by Side(Half), Side by Side(Full)</td></tr>
<tr><td>62.5</td><td>Frame Packing, Line Alternative</td></tr>
<tr><td rowspan="4">720p</td><td>37.50</td><td>50</td><td rowspan="2">Top & Bottom,
Side by Side(Half), Side by Side(Full)</td></tr>
<tr><td>44.96 / 45</td><td>59.94 / 60</td></tr>
<tr><td>75</td><td>50</td><td rowspan="2">Frame Packing, Line Alternative</td></tr>
<tr><td>89.91 / 90</td><td>59.94 / 60</td></tr>
<tr><td rowspan="4">1080i</td><td>28.125</td><td>50</td><td rowspan="2">Top & Bottom,
Side by Side(Half), Side by Side(Full)</td></tr>
<tr><td>33.72 / 33.75</td><td>59.94 / 60</td></tr>
<tr><td>56.25</td><td>50</td><td rowspan="2">Frame Packing, Field Alternative</td></tr>
<tr><td>67.432 / 67.5</td><td>59.94 / 60</td></tr>
<tr><td rowspan="9">1080p</td><td>26.97 / 27</td><td>23.97 / 24</td><td rowspan="3">Top & Bottom,
Side by Side(Half), Side by Side(Full)</td></tr>
<tr><td>28.125</td><td>25</td></tr>
<tr><td>33.72 / 33.75</td><td>29.976 / 30</td></tr>
<tr><td>43.94 / 54</td><td>23.97 / 24</td><td rowspan="3">Frame Packing, Line Alternative</td></tr>
<tr><td>56.25</td><td>25</td></tr>
<tr><td>67.432 / 67.5</td><td>29.976 / 30</td></tr>
<tr><td>56.25</td><td>50</td><td rowspan="2">Top & Bottom, Side by Side(Half)</td></tr>
<tr><td>67.432 / 67.5</td><td>59.94 / 60</td></tr>
<tr><td>USB</td><td>1080p</td><td>33.75</td><td>30</td><td rowspan="2">Side by Side(Half), Top & Bottom,
Checker Board, MPO(Photo), JPS(Photo)</td></tr>
<tr><td>DLNA</td><td>1080p</td><td>33.75</td><td>30</td></tr>
<tr><td></td><td colspan="3">Signal</td><td>Playable 3D video format</td></tr>
<tr><td>DTV</td><td colspan="3">Frame Compatible</td><td>Side by Side(Half), Top & Bottom</td></tr>
</table>

3D supported mode manually				
Input	Signal			Playable 3D video format
	Resolution	Horizontal Frequency (kHz)	Verticla Frequency (Hz)	
DTV	HD / SD	-	-	2D to 3D, Side by Side(Half), Top & Bottom
ATV(CVBS/SCART)	SD	-	-	
Component	HD / SD	-	-	
HDMI-PC	1024X768	48.36	60	
	1360X768	47.71		
	1920X1080	67.5		2D to 3D, Side by Side(Half), Top & Bottom, Checker Board, Frame Sequential, Row Interleaving, Column Interleaving
	Others	-	-	2D to 3D, Side by Side(Half), Top & Bottom
HDMI-DTV	480P	31.5	60	2D to 3D, Side by Side(Half), Top & Bottom, Checker Board, Frame Sequential, Row Interleaving, Column Interleaving
	576P	31.25	50	
	720p	37.5	50	
		45	60	
	1080i	28.12	50	2D to 3D, Side by Sied(Half), Top & Bottom
		33.75	60	
	1080p	27	24	2D to 3D, Side by Side(Half), Top & Bottom,Checker Board, Row Interleaving, Column Interleaving
		28.12	25	
		33.75	30	
		56.25	50	2D to 3D, Side by Side(Half), Top & Bottom, Checker Board, Frame Sequential, Row Interleaving, Column Interleaving
		67.5	60	
USB ,DLNA (Movie)	Under 704x480	-	-	2D to 3D
	Over 704x480 interlaced	-	-	2D to 3D, Side by Side(Half), Top & Bottom
	Over 704x480 progressive	-	50 / 60	2D to 3D, Side by Side(Half), Top & Bottom,Checker Board, Row Interleaving, Column Interleaving, Frame Sequential
	Over 704x480 progressive	-	others	2D to 3D, Side by Side(Half), Top & Bottom,Checker Board, Row Interleaving, Column Interleaving
USB, DLNA (Photo)	Under 320x240	-	-	2D to 3D
	Over 320x240	-	-	2D to 3D, Side by Side(Half), Top & Bottom
Miracast/Widi	1024X768p	-	30 / 60	2D to 3D, Side by Side(Half), Top & Bottom
	1280x720p	-	30 / 60	
	1920X1080p	-	30 / 60	
	Others	-	-	2D to 3D



Record the model number and serial number of the TV.
Refer to the label on the back cover and quote this information to your dealer when requiring any service.

MODEL _____

SERIAL _____



Please contact LG First.
If you have any inquiries or comments,
please contact LG customer information centre.

LG Customer Information Centre

Country	LG Service	Country	LG Service
Österreich	0 810 144 131	Nederland	0900 543 5454
België	015 200 255	Norge	800 187 40
Luxembourg	0032 15 200255	Polska	801 54 54 54
България	07001 54 54	Portugal	808 78 54 54
Česká Rep.	810 555 810	România	031 228 3542
Danmark	8088 5758	Slovensko	0850 111 154
Suomi	0800 0 54 54	España	902 500 234
France	3220 dites LG ou tapez 54	Sverige	0770 54 54 54
Deutschland	01803 11 54 11	Schweiz	0848 543 543
Ελλάδα	801 11 200 900, 210 4800 564	United Kingdom	0844 847 5454
		Россия	8 800 200 7676
Magyarország	06 40 54 54 54	Eesti	800 9990
Éire	0818 27 6955	Украина	0 800 303 000
Italia	199600099	Казахстан	8 8000 805 805, 2255(GSM)
Беларусь	8 820 0071 1111		
Latvija	80200201	Узбекистан	8 800 120 2222
Lietuva	880008081	Кыргызстан	8 0000 710 005

www.lg.com