LG
Life's Good

OWNER'S MANUAL
LED TV*

* LG LED TV applies LCD screen with LED backlights.

Please read this manual carefully before operating your set and retain it for future reference.

LP53**

www.lg.com

ENGLISH

TABLE OF CONTENTS

3 LICENSES

3 OPEN SOURCE SOFTWARE NOTICE

4 INSTALLATION PROCEDURE

4 ASSEMBLING AND PREPARING

4 Unpacking
7 Parts and buttons
8 Lifting and moving the TV
9 Setting up the TV
9 - Attaching the stand
9 - Detaching the Stand
10 - Mounting on a table
11 - Mounting on a wall
12 - Tidying cables

13 MAKING CONNECTIONS

13 Antenna connection
14 Adapter connection
14 HDMI connection
15 DVI to HDMI connection
15 RGB-PC connection
16 Component connection
16 USB connection
17 Headphone connection
17 CI module connection
18 Euro Scart connection

19 REMOTE CONTROL

20 MAINTENANCE

20 Cleaning your TV
20 - Screen, frame, cabinet and stand
20 - Power cord

20 TROUBLESHOOTING

21 SPECIFICATIONS

23 IR CODES

24 EXTERNAL CONTROL DEVICE SETUP

24 RS-232C setup
24 Type of connector:
D-Sub 9-Pin Male
24 RS-232C configurations
25 Communication parameters
25 Command reference list
26 Transmission / Receiving Protocol

WARNING

- If you ignore the warning message, you may be seriously injured or there is a possibility of accident or death.

CAUTION

- If you ignore the caution message, you may be slightly injured or the product may be damaged.

NOTE

- The note helps you understand and use the product safely. Please read the note carefully before using the product.

LICENSES

Supported licenses may differ by model. For more information about licenses, visit *www.lg.com.*

Manufactured under license from Dolby Laboratories. “Dolby” and the double-D symbol are trademarks of Dolby Laboratories.

The terms HDMI and HDMI High-Definition Multimedia Interface, and the HDMI logo are trademarks or registered trademarks of HDMI Licensing LLC in the United States and other countries.

ABOUT DIVX VIDEO: DivX® is a digital video format created by DivX, LLC, a subsidiary of Rovi Corporation. This is an official DivX Certified® device that plays DivX video. Visit divx.com for more information and software tools to convert your files into DivX video.

ABOUT DIVX VIDEO-ON-DEMAND: This DivX Certified® device must be registered in order to play purchased DivX Video-on-Demand (VOD) movies. To obtain your registration code, locate the DivX VOD section in your device setup menu. Go to vod.divx.com for more information on how to complete your registration.

“DivX Certified® to play DivX® video up to HD 1080p, including premium content.”

“DivX®, DivX Certified® and associated logos are trademarks of Rovi Corporation or its subsidiaries and are used under license.”

Covered by one or more of the following U.S. patents :
7,295,673; 7,460,668; 7,515,710; 7,519,274

OPEN SOURCE SOFTWARE NOTICE

To obtain the source code under GPL, LGPL, MPL and other open source licenses, that is contained in this product, please visit *http://opensource.lge.com*.
In addition to the source code, all referred license terms, warranty disclaimers and copyright notices are available for download.
LG Electronics will also provide open source code to you on CD-ROM for a charge covering the cost of performing such distribution (such as the cost of media, shipping and handling) upon email request to opensource@lge.com. This offer is valid for three (3) years from the date on which you purchased the product.

NOTE

- Image shown may differ from your TV.
- Your TV's OSD (On Screen Display) may differ slightly from that shown in this manual.
- The available menus and options may differ from the input source or product model that you are using.
- New features may be added to this TV in the future.
- The TV can be placed in standby mode in order to reduce the power consumption. And the TV should be turned off if it will not be watched for some time, as this will reduce energy consumption.
- The energy consumed during use can be significantly reduced if the level of brightness of the picture is reduced, and this will reduce the overall running cost.

INSTALLATION PROCEDURE

1 Open the package and make sure all the accessories are included.
2 Attach the stand to the TV set.
3 Connect an external device to the TV set.

ASSEMBLING AND PREPARING

Unpacking

Check your product box for the following items. If there are any missing accessories, contact the local dealer where you purchased your product. The illustrations in this manual may differ from the actual product and item.

CAUTION

- Do not use any unapproved items to ensure the safety and product life span.
- Any damages or injuries by using unapproved items are not covered by the manufacturer's warranty.
- Some models have a thin film attached on to the screen and this must not be removed.

NOTE

- The items supplied with your product may vary depending on the model.
- Product specifications or contents of this manual may be changed without prior notice due to upgrade of product functions.
- For an optimal connection, HDMI cables and USB devices should have bezels less than 10 mm thick and 18 mm width. Use an extension cable that supports USB 2.0 if the USB cable or USB memory stick does not fit into your TV's USB port.

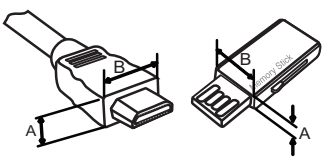

***A ≦ 10 mm**
***B ≦ 18 mm**



Owner's manual

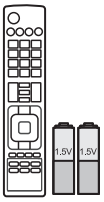

Remote control, Batteries (AAA)
(See p.19)

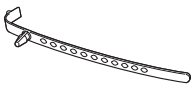

Cable Holder
(Depending on model)
(See p.12)



Power cord
(Depending on model)

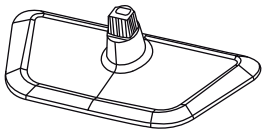

Stand base
(See p.9)

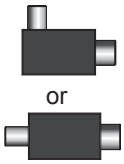

Isolator
(Depending on model)
(See p.6)

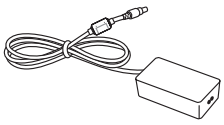

AC-DC Adaptor
(Depending on model & country)
(See p.14)

NOTE

- Antenna Isolator Installation Guide
  - Use this to install TV in a place where there is a voltage difference between TV Set and GND of antenna signal.
    - » If there is a voltage difference between TV Set and GND of antenna signal, the antenna contact might be heated and excessive heat might cause an accident.
  - You can improve the safety when watching TV by efficiently removing power voltage from TV antenna. It is recommended to mount the isolator to the wall. If it cannot be mounted to the wall, mount it on the TV. Avoid disconnecting the antenna Isolator after installation.
  - Before starting, be sure that the TV antenna is connected.

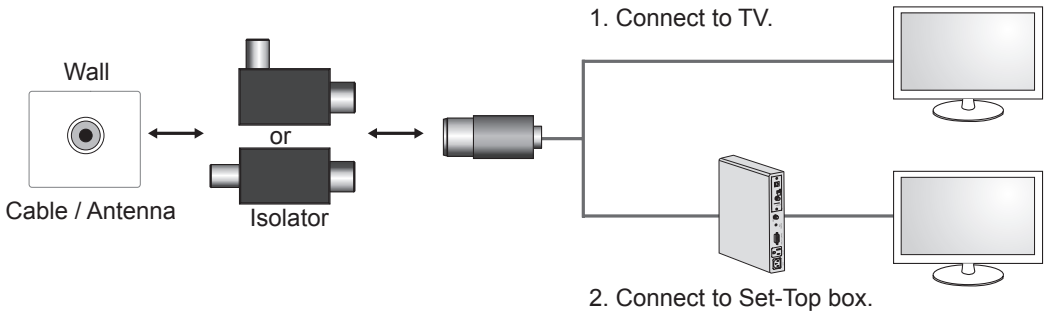

Connect one end of the isolator to cable/antenna jack and the other to TV set or set-top box.

“Equipment connected to the protective earthing of the building installation through the mains connection or through other equipment with a connection to protective earthing - and to a cable distribution system using coaxial cable, may in some circumstances create a fire hazard. Connection to a cable distribution system has therefore to be provided through a device providing electrical isolation below a certain frequency range (galvanic isolator, see EN 60728-11)”

When applying the RF Isolator, a slight loss of signal sensitivity can occur.

Parts and buttons

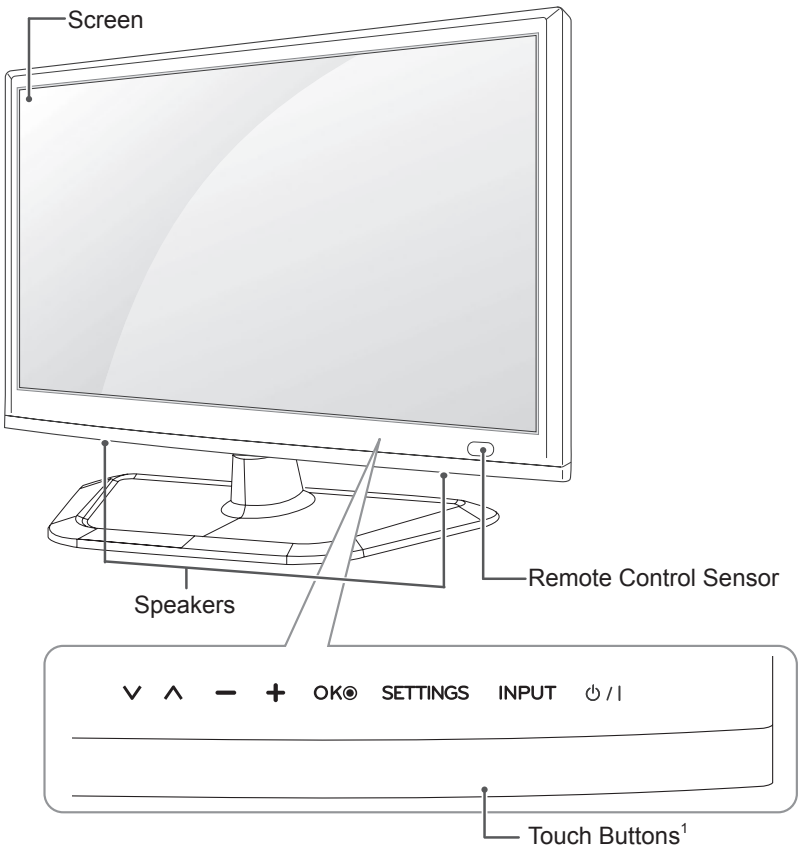

Touch Buttons	Description
∨ ∧	Scrolls through the saved programmes.
− +	Adjusts the volume level.
OK ◉	Selects the highlighted menu option or confirms an input.
SETTINGS	Accesses the main menu, or saves your input and exits the menus.
INPUT	Changes the input source.
⏻ / I	Turns the power on or off.

1 All of the buttons are touch sensitive and can be operated through simple touch with your finger.

Lifting and moving the TV

When moving or lifting the TV, read the following to prevent the TV from being scratched or damaged and for safe transportation regardless of its type and size.

CAUTION

- Avoid touching the screen at all times, as this may result in damage to the screen.

- It is recommended to move the TV in the box or packing material that the TV originally came in.
- Before moving or lifting the TV, disconnect the power cord and all cables.
- When holding the TV, the screen should face away from you to avoid damage.

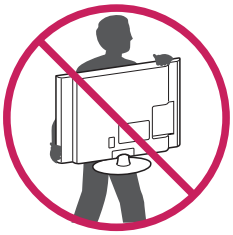

- Hold the top and bottom of the TV frame firmly. Make sure not to hold the transparent part, speaker, or speaker grill area.

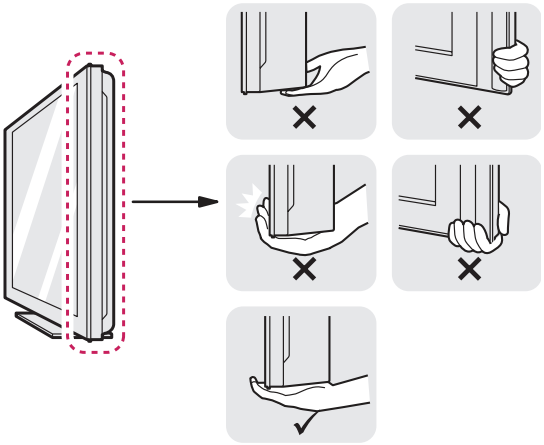

- When transporting a large TV, there should be at least 2 people.
- When transporting the TV by hand, hold the TV as shown in the following illustration.

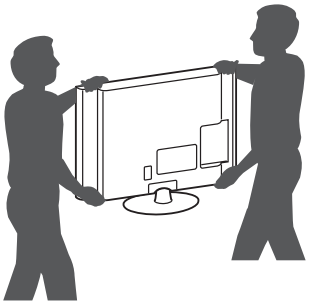

- When transporting the TV, do not expose the TV to jolts or excessive vibration.
- When transporting the TV, keep the TV upright, never turn the TV on its side or tilt towards the left or right.
- Do not apply excessive pressure to cause flexing / bending of frame chassis as it may damage screen.

Setting up the TV

Image shown may differ from your TV.

Attaching the stand

1

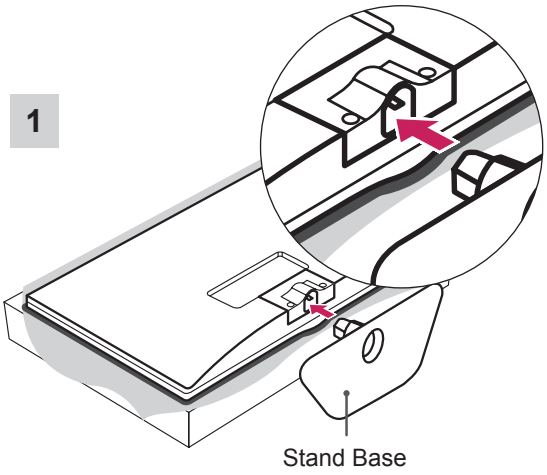

2

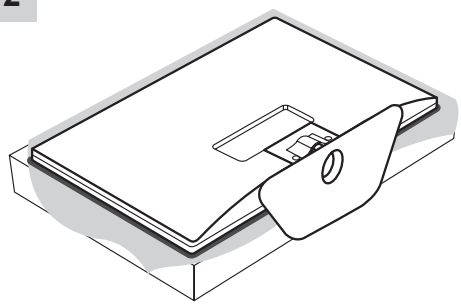

CAUTION

- When attaching the stand to the TV, place the screen facing down on a cushioned table or flat surface to protect the screen from scratches.

Detaching the Stand

1

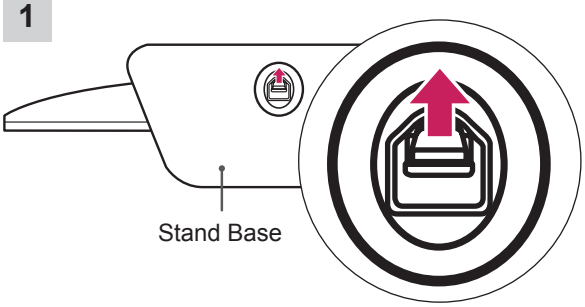

2

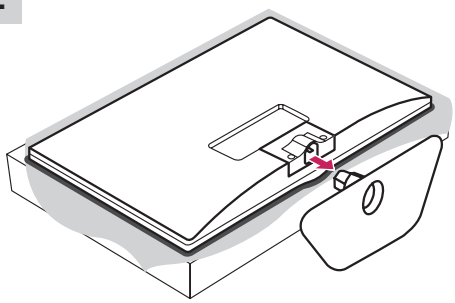

NOTE

- When Detaching the stand from TV, Detach the stand with lifting up the lever in the direction of the arrow.

Mounting on a table

1 Lift and tilt the TV into its upright position on a table.
- Leave a 10 cm (minimum) space from the wall for proper ventilation.

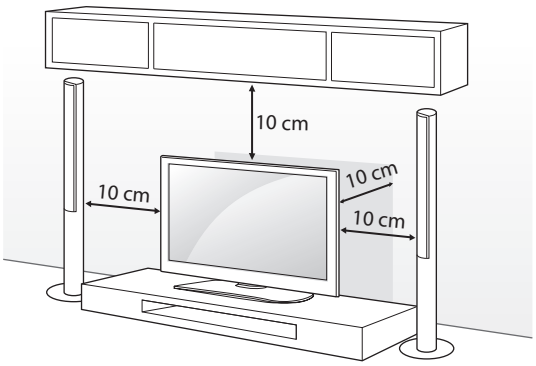

2 Connect the AC-DC Adapter and Power Cord to a wall outlet.

CAUTION

- Do not place the TV near or on sources of heat, as this may result in fire or other damage.

Using the Kensington security system

(Depending on model)

The Kensington security system connector is located at the rear of the TV. For more information of installation and using, refer to the manual provided with the Kensington security system or visit *http://www.kensington.com.*

Connect the Kensington security system cable between the TV and a table.

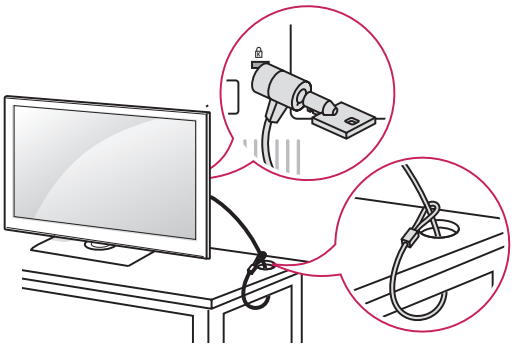

Securing the TV to a wall

(This feature is not available for all models.)

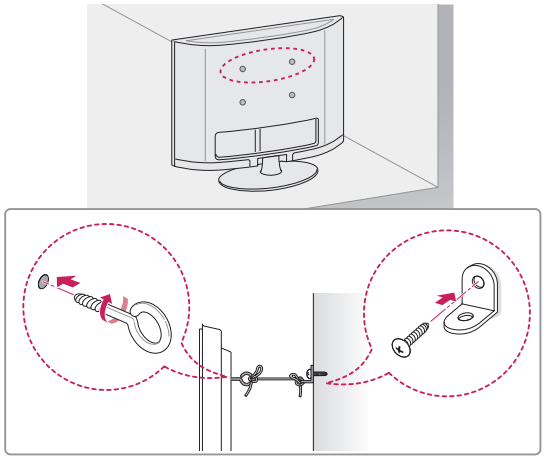

1 Insert and tighten the eye-bolts, or TV brackets and bolts on the back of the TV.
   - If there are bolts inserted at the eye-bolts position, remove the bolts first.
2 Mount the wall brackets with the bolts to the wall.
   Match the location of the wall bracket and the eye-bolts on the rear of the TV.
3 Connect the eye-bolts and wall brackets tightly with a sturdy rope.
   Make sure to keep the rope horizontal with the flat surface.

CAUTION

- Make sure that children do not climb on or hang on the TV.

NOTE

- Use a platform or cabinet that is strong and large enough to support the TV securely.
- Brackets, bolts and ropes are not provided. You can obtain additional accessories from your local dealer.

Mounting on a wall

Attach an optional wall mount bracket at the rear of the TV carefully and install the wall mount bracket on a solid wall perpendicular to the floor. When you attach the TV to other building materials, please contact qualified personnel.
LG recommends that wall mounting be performed by a qualified professional installer.

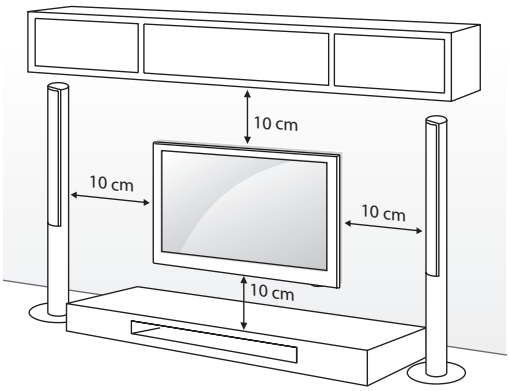

Make sure to use screws and wall mount bracket that meet the VESA standard. Standard dimensions for the wall mount kits are described in the following table.

Separate purchase(Wall Mounting Bracket)

Model	28LP53**
VESA (A x B)	100 x 100
Standard screw	M4
Number of screws	4
Wall mount bracket	LSW130B 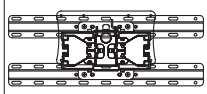

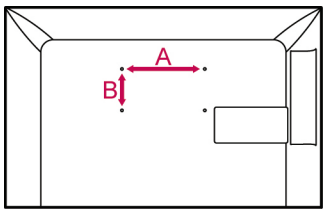

CAUTION

- Disconnect the power first, and then move or install the TV. Otherwise electric shock may occur.
- If you install the TV on a ceiling or slanted wall, it may fall and result in severe injury. Use an authorized LG wall mount and contact the local dealer or qualified personnel.
- Do not over tighten the screws as this may cause damage to the TV and void your warranty.
- Use the screws and wall mounts that meet the VESA standard. Any damages or injuries by misuse or using an improper accessory are not covered by the warranty.

NOTE

- Use the screws that are listed on the VESA standard screw specifications.
- The wall mount kit includes an installation manual and necessary parts.
- The wall mount bracket is not provided. You can obtain additional accessories from your local dealer.
- The length of screws may differ depending on the wall mount. Make sure to use the proper length.
- For more information, refer to the manual supplied with the wall mount.

Tidying cables

Gather and bind the cables with the cable holder.

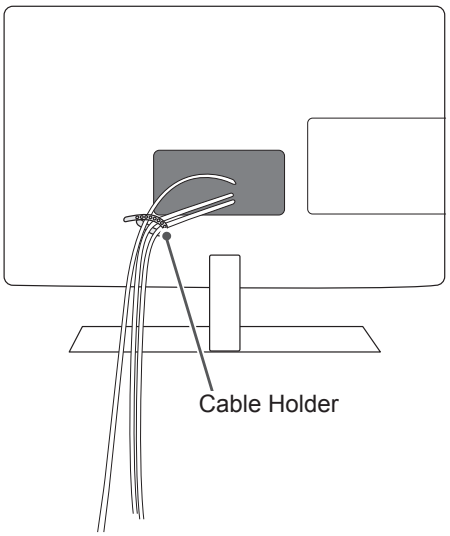

CAUTION

- Do not move the TV by holding the cable holder, as the cable holders may break, and injuries and damage to the TV may occur.

MAKING CONNECTIONS

This section on **MAKING CONNECTIONS** mainly uses diagrams for the LP53** models.
Connect various external devices to the TV and switch input modes to select an external device. For more information on external device's connection, refer to the manual provided with each device.
Available external devices are: HD receivers, DVD players, VCRs, audio systems, USB storage devices, PC, gaming devices, and other external devices.

NOTE

- The external device connection may differ from the model.
- Connect external devices to the TV regardless of the order of the TV port.
- If you record a TV program on a DVD recorder or VCR, make sure to connect the TV signal input cable to the TV through a DVD recorder or VCR. For more information on recording, refer to the manual provided with the connected device.
- Refer to the external equipment's manual for operating instructions.
- If you connect a gaming device to the TV, use the cable supplied with the gaming device.
- In PC mode, there may be noise associated with the resolution, vertical pattern, contrast or brightness. If noise is present, change the PC output to another resolution, change the refresh rate to another rate or adjust the brightness and contrast on the PICTURE menu until the picture is clear.
- In PC mode, some resolution settings may not work properly depending on the graphics card.

Antenna connection

Connect the TV to a wall antenna socket with an RF cable (75 Ω).

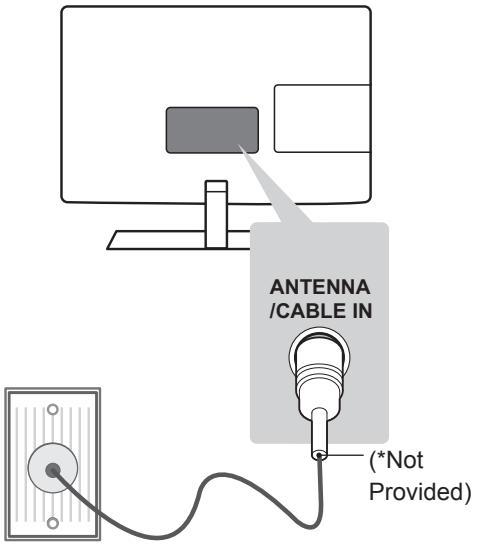

NOTE

- Use a signal splitter to use more than 2 TVs.
- If the image quality is poor, install a signal amplifier properly to improve the image quality.
- If the image quality is poor with an antenna connected, try to realign the antenna in the correct direction.
- An antenna cable and converter are not supplied.
- Supported DTV Audio: MPEG, Dolby Digital, Dolby Digital Plus, HE-AAC

Adapter connection

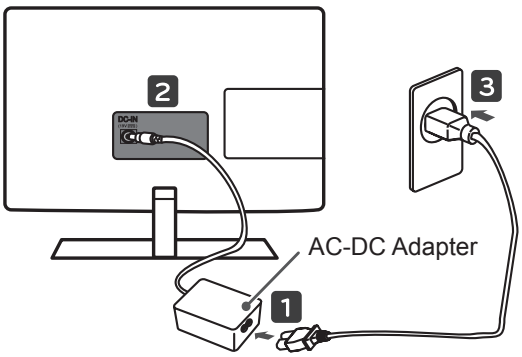

1 Connect the antenna cable to the antenna input port on the TV.
2 Connect the DC adapter plug to the power input jack on the TV.
3 Connect the power cord to the DC adapter first, then plug the power cord into the wall power outlet.

CAUTION

- Please be sure to connect the TV to the AC-DC power adapter before connecting the TV's power plug to a wall power outlet.

HDMI connection

Transmits the digital video and audio signals from an external device to the TV. Connect the external device and the TV with the HDMI cable as shown.

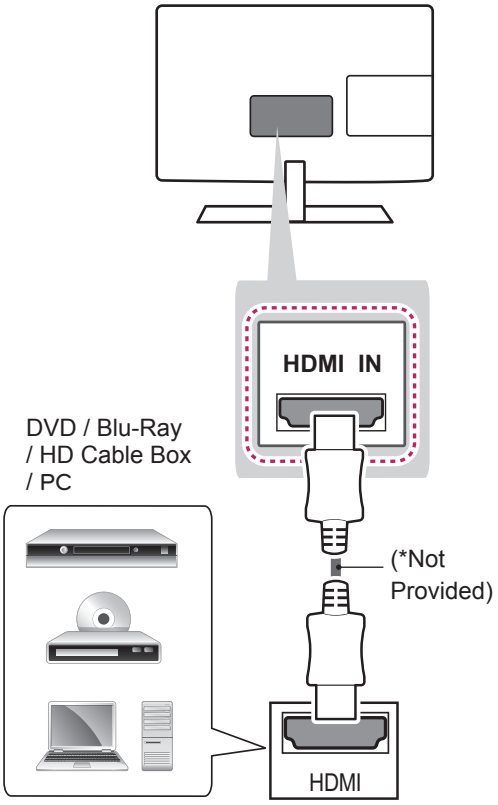

NOTE

- It is recommended to use the TV with the HDMI connection for the best image quality.
- Use the latest High Speed HDMI™ Cable with CEC (Customer Electronics Control) function.
- High Speed HDMI™ Cables are tested to carry an HD signal up to 1080p and higher.
- Supported HDMI Audio format : Dolby Digital, PCM (Up to 192 KHz, 32KHz/44.1KHz /48KHz/88KHz/96KHz/176KHz/192KHz)
  ※ DTS Not supported.

DVI to HDMI connection

Transmits the digital video signal from an external device to the TV. Connect the external device and the TV with the HDMI to DVI cable as shown. To transmit an audio signal, connect an audio cable.

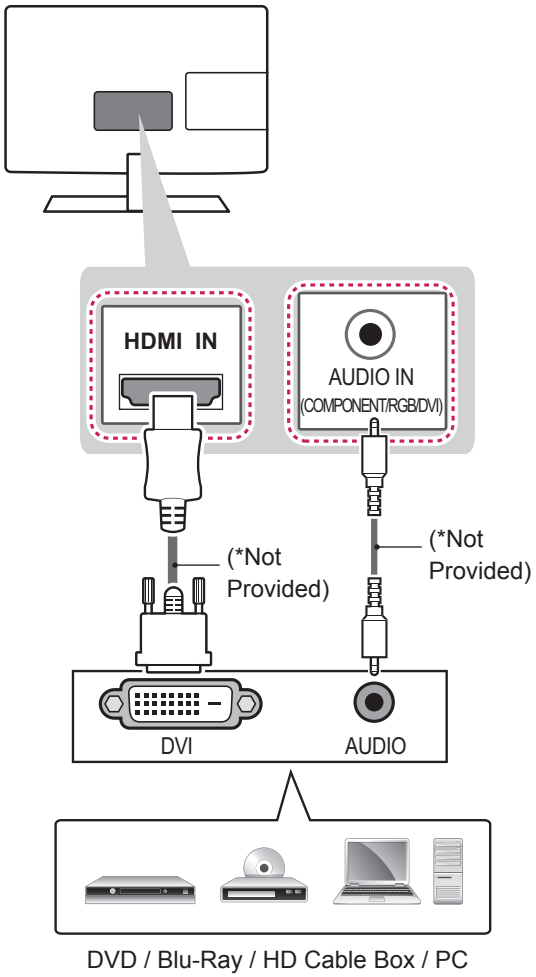

DVD / Blu-Ray / HD Cable Box / PC

NOTE

- Depending on the graphics card, DOS mode may not work if a HDMI to DVI Cable is in use.
- When using the HDMI/DVI cable, only Single link is supported.

RGB-PC connection

Transmits the video signal from PC to the TV. To transmit an audio signal, connect an audio cable.

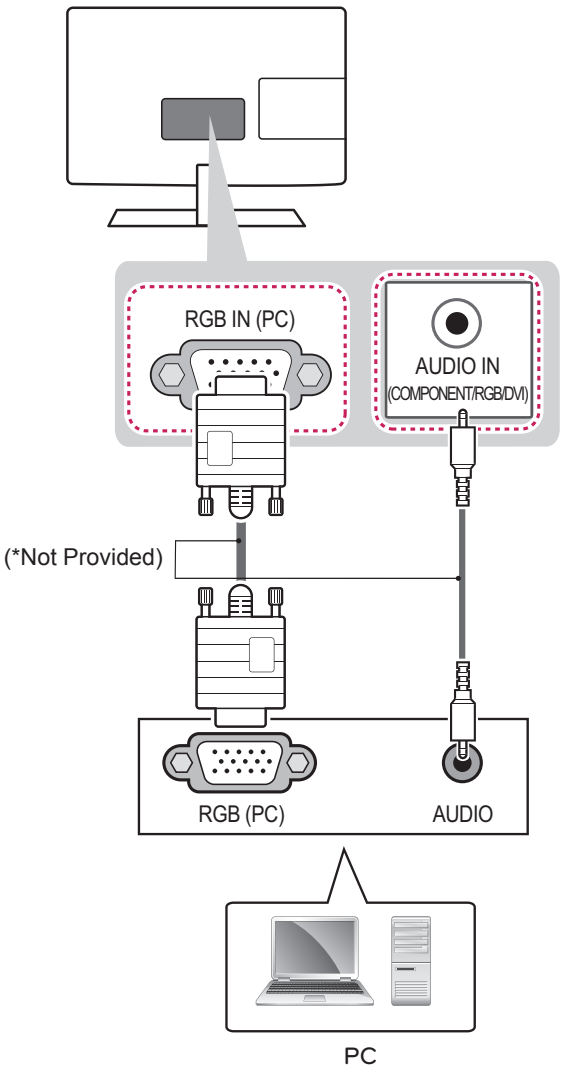

PC

Component connection

Transmits the analogue video and audio signals from an external device to the TV. Connect the external device and the TV with the component cable as shown.

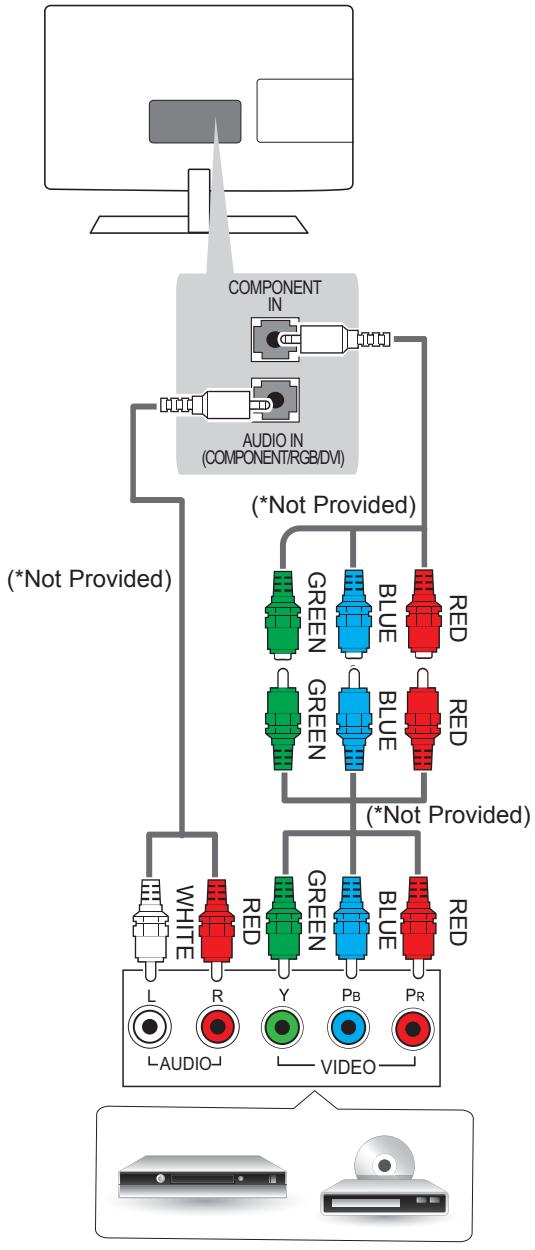

NOTE

- If cables are not installed correctly, it could cause this image to display in black and white or with distorted colours.

USB connection

Connect a USB storage device such as s USB flash memory, external hard drive or a USB memory card reader to the TV and access the My media menu to use various multimedia files.

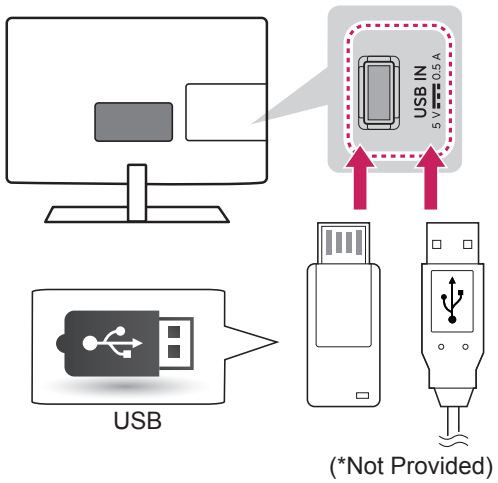

Headphone connection

Transmits the headphone signal from the TV to an external device. Connect the external device and the TV with the headphone as shown.

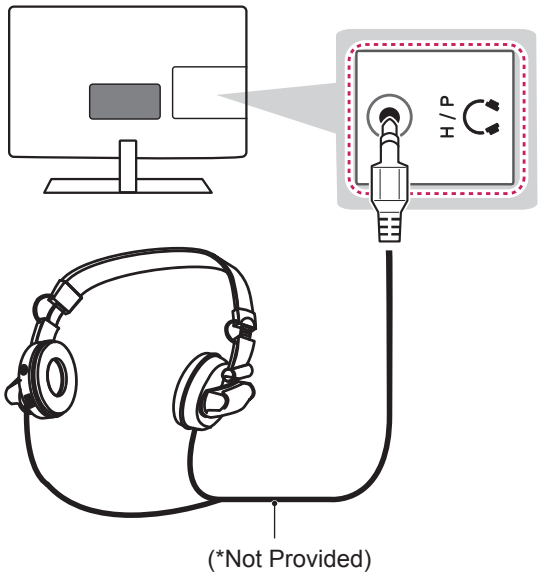

NOTE

- AUDIO menu items are disabled when connecting a headphone.
- Headphone impedance: 16 Ω
- Max audio output of headphone: 9 mW to 15 mW
- Headphone jack size: 0.35 cm

CI module connection

View the encrypted (pay) services in digital TV mode. This feature is not available in all countries.

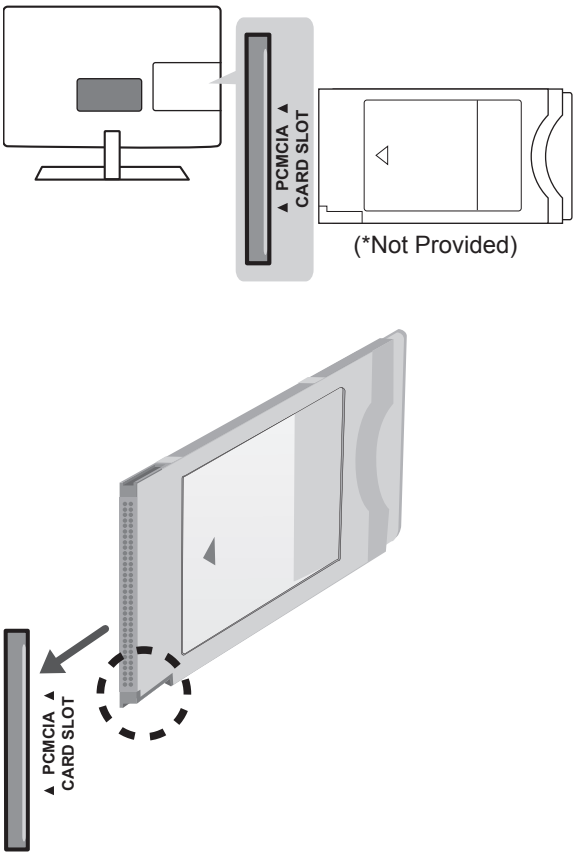

NOTE

- Check if the CI module is inserted into the PCMCIA card slot in the right direction. If the module is not inserted properly, this can cause damage to the TV and the PCMCIA card slot.

Euro Scart connection

Transmits the video and audio signals from an external device to the TV set. Connect the external device and the TV set with the euro scart cable as shown.

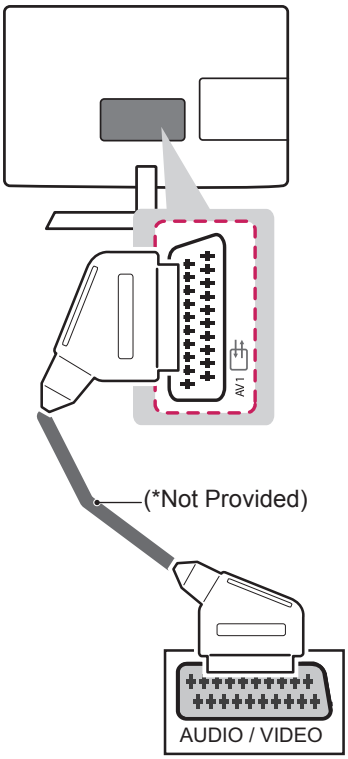

Output Type / Current input mode	AV1 (TV Out[1])
Digital TV	Digital TV
Analogue TV	Analogue TV
Component, AV, HDMI, RGB	

1 TV Out : Outputs Analogue TV or Digital TV signals.

NOTE

- Any Euro scart cable used must be signal shielded.

REMOTE CONTROL

The descriptions in this manual are based on the buttons on the remote control.
Please read this manual carefully and use the TV correctly.
To replace batteries, open the battery cover, replace batteries (1.5 V AAA) matching the ⊕ and ⊖ ends to the label inside the compartment, and close the battery cover.
To remove the batteries, perform the installation actions in reverse.

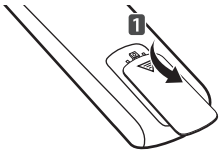

CAUTION

- Do not mix old and new batteries, as this may damage the remote control.

Make sure to point the remote control toward the remote control sensor on the TV.

⏻ Turns the TV on or off.
ENERGY SAVING Adjusts the brightness of the screen to reduce energy consumption.
AV MODE Selects an AV mode.
INPUT Changes the input source.
TV/RAD Selects Radio, TV and DTV programme.
GUIDE Shows programme guide.
PORTAL Displays and removes hotel interactive
INFO Views the information of the current programme and screen.
Navigation buttons (up/down/left/right) Scrolls through menus or options.
OK Selects menus or options and confirms your input.
Home Selects a menu. Clears all on-screen displays and returns to TV viewing from any menu.
⮌ Returns to the previous level.
EXIT Clears on-screen displays and return to TV viewing.
Q. MENU Accesses the quick menus.

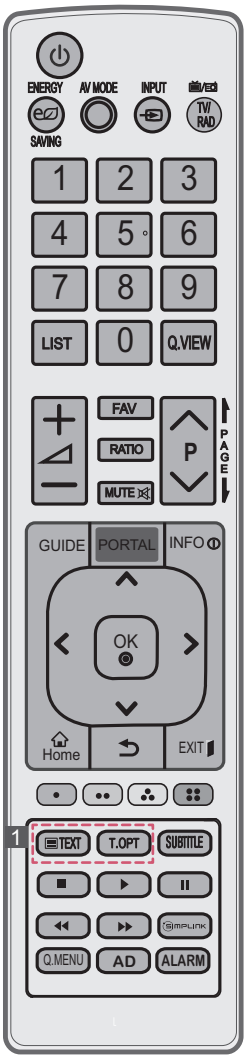

Number buttons Enters numbers.
LIST Accesses the saved programme list.
Q.VIEW Returns to the previously viewed programme.
+◿− Adjusts the volume level.
FAV Accesses your favourite programme list.
RATIO Resizes an image.
MUTE Mutes all sounds.
∨**P**∧ Scrolls through the saved programmes.
PAGE Moves to the previous or next screen.
Colour buttons These access special functions in some menus. (●: Red, ●●: Green, ●●●: Yellow, ●●●●: Blue)
1 TELETEXT BUTTONS These buttons are used for teletext.
SUBTITLE Recalls your preferred subtitle in digital mode.
Control buttons (■, ▶, II, ◀◀, ▶▶) Controls the MY MEDIA menus, or the SIMPLINK compatible devices (USB,SIMPLINK).
SIMPLINK Accesses the AV devices connected with the HDMI cable through HDMI-CEC. Opens the SIMPLINK menu.
AD Switches the Audio Description On or Off.
ALARM Sets the alarm function. (Except for 28LP53**)

MAINTENANCE

Cleaning your TV

Clean your TV regularly to keep the best performance and to extend the product lifespan.

CAUTION

- Make sure to turn the power off and disconnect the power cord and all other cables first.
- When the TV is left unattended and unused for a long time, disconnect the power cord from the wall outlet to prevent possible damage from lightning or power surges.

Screen, frame, cabinet and stand

- To remove dust or light dirt, wipe the surface with a dry, clean, and soft cloth.
- To remove major dirt, wipe the surface with a soft cloth dampened in clean water or a diluted mild detergent. Then wipe immediately with a dry cloth.

CAUTION

- Avoid touching the screen at all times, as this may result in damage to the screen.
- Do not push, rub, or hit the screen surface with your fingernail or a sharp object, as this may result in scratches and image distortions.
- Do not use any chemicals as this may damage the product.
- Do not spray liquid onto the surface. If water enters the TV, it may result in fire, electric shock, or malfunction.

Power cord

Remove the accumulated dust or dirt on the power cord regularly.

TROUBLESHOOTING

The software version can be updated for improvement in performance. Customer needs to ensure the compatibility of customer's equipment with LGE software. If needed, please consult with LGE and upload revised software version according to the guidance provided by LGE.

Problem	Solution
Cannot control the TV with the remote control.	• Check the remote control sensor on the product and try again. • Check if there is any obstacle between the product and the remote control. • Check if the batteries are still working and properly installed (⊕ to ⊕, ⊖ to ⊖).
No image display and no sound is produced.	• Check if the product is turned on. • Check if the power cord is connected to a wall outlet. • Check if there is a problem in the wall outlet by connecting other products.
The TV turns off suddenly.	• Check the power control settings. The power supply may be interrupted. • Check if the Auto sleep feature is activated in the Time settings.
When connecting to the PC (RGB/HDMI DVI), 'No signal' or 'Invalid Format' is displayed.	• Turn the TV off/on using the remote control. • Reconnect the RGB/HDMI cable. • Restart the PC with the TV on.

SPECIFICATIONS

Product specifications may be changed without prior notice due to upgrade of product functions.

MODELS		28LP53**
		28LP531H-ZA
Dimensions (W x H x D)	With stand (mm)	645.3 x 447.9 x 182.1
	Without stand (mm)	645.3 x 401.6 x 78.7
Weight	With stand (kg)	5.1
	Without stand (kg)	4.7
Power Consumption		38 W
Power requirement		24 V ⎓ 1.6 A
AC/DC Adapter		Manufacturer : Ampower Model : AAH-00 Input : AC 100 – 240 V ~ 50 / 60 Hz Output : 24 V ⎓ 2.5 A

CI Module Size (W x H x D)		100.0 mm x 55.0 mm x 5.0 mm
Environment condition	Operating Temperature	0 °C to 40 °C
	Operating Humidity	Less than 80 %
	Storage Temperature	-20 °C to 60 °C
	Storage Humidity	Less than 85 %

		Digital TV	Analogue TV
Television system		DVB-T DVB-C	PAL/SECAM B/G/D/K/I/I', SECAM L/L'
Programme coverage		VHF, UHF	VHF: E2 to E12, UHF: E21 to E69, CATV: S1 to S20, HYPER: S21 to S47
Maximum number of storable programmes	LP53**	1,500	
External antenna impedance		75 Ω	

HDMI/DVI-DTV supported mode

Resolution	Horizontal Frequency (kHz)	Vertical Frequency (Hz)
720x480	31.47 31.5	59.94 60
720x576	31.25	50
1280x720	37.5 44.96 45	50 59.94 60
1920x1080	33.72 33.75 28.125 26.97 27 33.716 33.75 56.25 67.432 67.5	59.94 60 50 23.976 24 29.976 30.00 50 59.94 60

Component port connecting information

Component ports on the TV	Y	P_B	P_R

Video output ports on DVD player	Y	P_B	P_R
	Y	B-Y	R-Y
	Y	Cb	Cr
	Y	Pb	Pr

Signal	Component
480i/576i	O
480p/576p	O
720p/1080i	O
1080p	O (50 Hz / 60 Hz only)

RGB-PC, HDMI/DVI-PC supported mode

Resolution	Horizontal Frequency (kHz)	Vertical Frequency (Hz)
720x400	31.468	70.08
640x480	31.469	59.94
800x600	37.879	60.31
1024x768	48.363	60.00
1280x720	45	60
1280x768	47.78	59.87
1360x768	47.72	59.80

IR CODES

- This feature is not available for all models.

Code (Hexa)	Function	Note
08	⏻ (POWER)	Remote control Button (Power On/Off)
95	ENERGY SAVING	Remote control Button
30	AV MODE	Remote control Button
0B	INPUT	Remote control Button
F0	TV/RAD	Remote control Button
10-19	Number Key 0-9	Remote control Button
53	LIST	Remote control Button
1A	Q.VIEW	Remote control Button
02	◿ +	Remote control Button
03	◿ -	Remote control Button
1E	FAV	Remote control Button
79	RATIO	Remote control Button
09	MUTE	Remote control Button
00	P ∧	Remote control Button
01	P ∨	Remote control Button
43	SETTINGS	Remote control Button
AB	GUIDE	Remote control Button
45	Q.MENU	Remote control Button
AA	INFO	Remote control Button
28	BACK ⮌	Remote control Button
5B	EXIT	Remote control Button
44	OK	Remote control Button
40	^	Remote control Button
41	v	Remote control Button
07	<	Remote control Button
06	>	Remote control Button
72	RED	Remote control Button
71	GREEN	Remote control Button
63	YELLOW	Remote control Button
61	BLUE	Remote control Button
20	TEXT	Remote control Button
21	T.OPT(T.Option)	Remote control Button
39	SUBTITLE	Remote control Button
B1	■	Remote control Button
B0	▶	Remote control Button
BA	⏸	Remote control Button
8E	▶▶	Remote control Button
8F	◀◀	Remote control Button
91	AD	Remote control Button
7E	SIMPLINK	Remote control Button
0C	PORTAL	Remote control Button
43	HOME	Remote control Button
E8	ALARM	Remote control Button

ENGLISH

EXTERNAL CONTROL DEVICE SETUP

RS-232C setup

Connect the RS-232C (serial port) input jack to an external control device (such as a computer or an A/V control system) to control the product's functions externally.
Connect the serial port of the control device to the RS-232C jack on the product back panel.
Note: RS-232C connection cables are not supplied with the product.

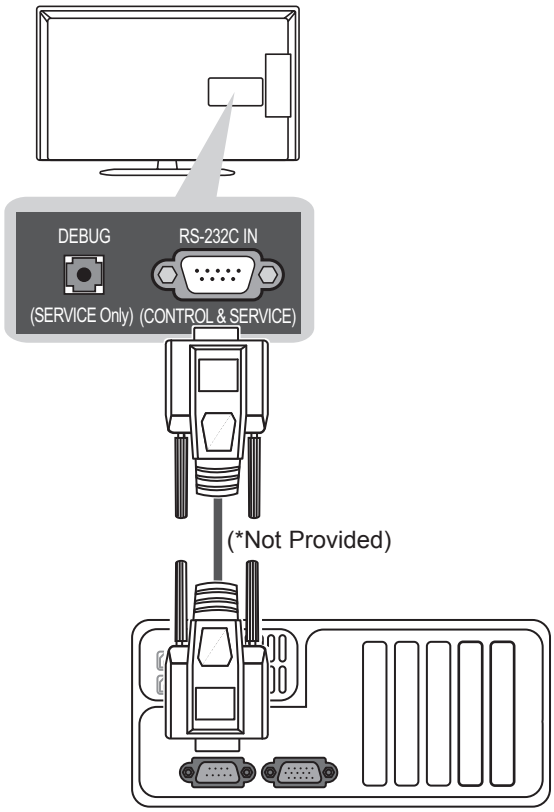

Type of connector: D-Sub 9-Pin Male

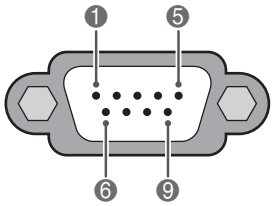

No.	Pin name
1	3.5V
2	RXD (Receive data)
3	TXD (Transmit data)
4	No Connection
5	GND
6	No Connection
7	No Connection
8	No Connection
9	No Connection (12V available in some models)

RS-232C configurations

7-Wire Configurations
(Standard RS-232C cable)

PC		TV	
RXD	2	3	TXD
TXD	3	2	RXD
GND	5	5	GND
DTR	4	6	DSR
DSR	6	4	DTR
RTS	7	8	CTS
CTS	8	7	RTS
	D-Sub 9	D-Sub 9	

3-Wire Configurations
(Not standard)

PC		TV	
RXD	2	3	TXD
TXD	3	2	RXD
GND	5	5	GND
DTR	4	6	DTR
DSR	6	4	DSR
RTS	7	7	RTS
CTS	8	8	CTS
	D-Sub 9	D-Sub 9	

Set ID

Set ID number. "**Real Data Mapping**".

1. Press **SETTINGS** or **HOME** to access the main menus.
2. Press the Navigation buttons to scroll to **OPTION** and press **OK**.
3. Press the Navigation buttons to scroll to **Set ID** and press **OK**.
4. Scroll left or right to select a set ID number and select **Close**. The adjustment range is 1-99.
5. When you are finished, press **EXIT**.

Communication parameters

- Baud rate: 9600 bps (UART)
- Data length: 8 bits
- Parity : None
- Stop bit: 1 bit
- Communication code: ASCII code
- Use a crossed (reverse) cable.

Command reference list

(Depending on model)

	COMMAND1	COMMAND2	DATA (Hexadeci-mal)		COMMAND1	COMMAND2	DATA (Hexadeci-mal)
01. Power	k	a	00 to 01	13. Treble	k	r	00 to 64
02. Aspect Ratio	k	c	(See p.27)	14. Bass	k	s	00 to 64
03. Screen Mute	k	d	(See p.27)	15. Balance	k	t	00 to 64
04. Volume Mute	k	e	00 to 01	16. Colour Temperature	x	u	00 to 64
05. Volume Control	k	f	00 to 64	17. Energy Saving	j	q	00 to 05
06. Contrast	k	g	00 to 64	18. Auto Con-figuration	j	u	01
07. Brightness	k	h	00 to 64	19. Tune Com-mand	m	a	(See p.29)
08. Colour	k	i	00 to 64	20. Programme Add/Skip	m	b	00 to 01
09. Tint	k	j	00 to 64	21. Key	m	c	Key Code
10. Sharpness	k	k	00 to 64	22. Control Back Light	m	g	00 to 64
11. OSD Select	k	l	00 to 01	23. Input select (Main)	x	b	(See p.30)
12. Remote Control Lock Mode	k	m	00 to 01				

* Note : During USB operations such as DivX or EMF, all commands except Power(ka) and Key(mc) are not executed and treated as NG.

Transmission / Receiving Protocol

Transmission

[Command1][Command2][ ][Set ID][ ][Data][Cr]

[Command 1] : First command to control the TV.(j, k, m or x)
[Command 2] : Second command to control the TV.
[Set ID] : You can adjust the set ID to choose desired monitor ID number in option menu. Adjustment range is 1 to 99. When selecting Set ID '0', every connected set is controlled.
Set ID is indicated as decimal (1 to 99) on menu and as Hexa decimal (0x0 to 0x63) on transmission/receiving protocol.
[DATA] : To transmit command data. Transmit 'FF' data to read status of command.
[Cr] : Carriage Return
ASCII code '0x0D'
[ ] : ASCII code 'space (0x20)'

OK Acknowledgement

[Command2][ ][Set ID][ ][OK][Data][x]

* The set transmits ACK (acknowledgement) based on this format when receiving normal data. At this time, if the data is data read mode, it indicates present status data. If the data is data write mode, it returns the data of the PC computer.

Error Acknowledgement

[Command2][ ][Set ID][ ][NG][Data][x]

* The set transmits ACK (acknowledgement) based on this format when receiving abnormal data from non-viable functions or communication errors.

Data 00: Illegal Code

01. Power (Command: k a)

► To control Power On/Off of the set.

Transmission[k][a][ ][Set ID][ ][Data][Cr]

Data 00 : Power Off 01 : Power On

Ack [a][ ][Set ID][ ][OK/NG][Data][x]

► To show Power On/Off.

Transmission [k][a][ ][Set ID][ ][FF][Cr]

Ack [a][ ][Set ID][ ][OK/NG][Data][x]

* Similarly, if other functions transmit '0xFF' data based on this format, Acknowledgement data feed back presents status about each function.
* OK Ack., Error Ack. and other message may display on the screen when TV is power On.

02. Aspect Ratio (Command: k c) (Main Picture Size)

► To adjust the screen format. (Main picture format)
You can also adjust the screen format using the Aspect Ratio in the Q.MENU. or PICTURE menu.

Transmission [k][c][ ][Set ID][ ][Data][Cr]

Data 01 : Normal screen (4:3)
02 : Wide screen (16:9)
04 : Zoom
06 : Original
07 : 14:9
09 : Just Scan
0B : Full Wide
10 to 1F : Cinema Zoom 1 to 16

Ack [c][ ][Set ID][ ][OK/NG][Data][x]

* Using the PC input, you select either 16:9 or 4:3 screen aspect ratio.
* In DTV/HDMI (1080i 50 Hz / 60 Hz, 720p 50Hz / 60 Hz, 1080p 24 Hz / 30 Hz / 50 Hz / 60 Hz), Component(720p, 1080i, 1080p 50 Hz / 60 Hz) mode, Just Scan is available.
* Full Wide is supported only for Digital, Analogue, AV.

03. Screen Mute (Command: k d)

► To select screen mute on/off.

Transmission [k][d][ ][Set ID][ ][Data][Cr]

Data 00 : Screen mute off (Picture on)
Video mute off
01 : Screen mute on (Picture off)
10 : Video mute on

Ack [d][ ][Set ID][ ][OK/NG][Data][x]

* In case of video mute on only, TV will display On Screen Display(OSD). But, in case of Screen mute on, TV will not display OSD.

04. Volume Mute (Command: k e)

► To control volume mute on/off.
You can also adjust mute using the MUTE button on remote control.

Transmission [k][e][ ][Set ID][ ][Data][Cr]

Data 00 : Volume mute on (Volume off)
01 : Volume mute off (Volume on)

Ack [e][ ][Set ID][ ][OK/NG][Data][x]

05. Volume Control (Command: k f)

► To adjust volume.
You can also adjust volume with the volume buttons on remote control.

Transmission [k][f][ ][Set ID][ ][Data][Cr]

Data Min : 00 to Max : 64
* Refer to 'Real data mapping'. See p.30.

Ack [f][ ][Set ID][ ][OK/NG][Data][x]

06. Contrast (Command: k g)

► To adjust screen contrast.
You can also adjust contrast in the PICTURE menu.

Transmission [k][g][ ][Set ID][ ][Data][Cr]

Data Min : 00 to Max : 64
* Refer to 'Real data mapping'. See p.30.

Ack [g][ ][Set ID][ ][OK/NG][Data][x]

07. Brightness (Command: k h)

► To adjust screen brightness.
You can also adjust brightness in the PICTURE menu.

Transmission [k][h][ ][Set ID][ ][Data][Cr]

Data Min : 00 to Max : 64
* Refer to 'Real data mapping'. See p.30.

Ack [h][ ][Set ID][ ][OK/NG][Data][x]

08. Colour (Command: k i)

► To adjust the screen colour.
You can also adjust colour in the PICTURE menu.

Transmission [k][i][ ][Set ID][ ][Data][Cr]

Data Min : 00 to Max : 64
* Refer to 'Real data mapping'. See p.30.

Ack [i][ ][Set ID][ ][OK/NG][Data][x]

09. Tint (Command: k j)

► To adjust the screen tint.
You can also adjust tint in the PICTURE menu.

Transmission [k][j][ ][Set ID][ ][Data][Cr]

Data Red : 00 to Green : 64
* Refer to 'Real data mapping'. See p.30.

Ack [j][ ][Set ID][ ][OK/NG][Data][x]

10. Sharpness (Command: k k)

► To adjust the screen sharpness.
You can also adjust sharpness in the PICTURE menu.

Transmission [k][k][ ][Set ID][ ][Data][Cr]

Data Min : 00 to Max : 64
* Refer to 'Real data mapping'. See p.30.

Ack [k][ ][Set ID][ ][OK/NG][Data][x]

11. OSD Select (Command: k l)

► To select OSD (On Screen Display) on/off when controlling remotely.

Transmission [k][l][ ][Set ID][ ][Data][Cr]

Data 00 : OSD off 01 : OSD on

Ack [l][ ][Set ID][ ][OK/NG][Data][x]

12. Remote control lock mode (Command: k m)

► To lock the front panel controls on the monitor and remote control.

Transmission [k][m][ ][Set ID][ ][Data][Cr]

Data 00 : Lock off 01 : Lock on

Ack [m][ ][Set ID][ ][OK/NG][Data][x]

* If you are not using the remote control, use this mode.
When main power is on/off, external control lock is released.
* In the standby mode, if key lock is on, TV will not turn on by power on key of IR & Local Key.

13. Treble (Command: k r)

► To adjust treble.
You can also adjust treble in the AUDIO menu.

Transmission [k][r][ ][Set ID][ ][Data][Cr]

Data Min : 00 to Max : 64
* Refer to 'Real data mapping'. See p.30.

Ack [r][ ][Set ID][ ][OK/NG][Data][x]

14. Bass (Command: k s)

► To adjust bass.
You can also adjust bass in the AUDIO menu.

Transmission [k][s][ ][Set ID][ ][Data][Cr]

Data Min : 00 to Max : 64
* Refer to 'Real data mapping'. See p.30.

Ack [s][ ][Set ID][ ][OK/NG][Data][x]

15. Balance (Command: k t)

► To adjust balance.
You can also adjust balance in the AUDIO menu.

Transmission [k][t][ ][Set ID][ ][Data][Cr]

Data Min : 00 to Max : 64
* Refer to 'Real data mapping'. See p.30.

Ack [t][ ][Set ID][ ][OK/NG][Data][x]

16. Colour Temperature (Command: x u)

► To adjust colour temperature. You can also adjust Colour Temperature in the PICTURE menu.

Transmission [x][u][ ][Set ID][ ][Data][Cr]

Data Min : 00 to Max : 64
* Refer to 'Real data mapping'. See p.30.

Ack [u][ ][Set ID][ ][OK/NG][Data][x]

17. Energy Saving (Command: j q)

► To reduce the power consumption of the TV. You can also adjust Energy Saving in PICTURE menu.

Transmission [j][q][ ][Set ID][ ][Data][Cr]

Power Saving Function					Level				Description
7	6	5	4		3	2	1	0	
0	0	0	0	Low Power	0	0	0	0	Off
0	0	0	0	Low Power	0	0	0	1	Minimum
0	0	0	0	Low Power	0	0	1	0	Medium
0	0	0	0	Low Power	0	0	1	1	Maximum
0	0	0	0	Low Power	0	1	0	1	Screen Off

Ack [q][ ][Set ID][ ][OK/NG][Data][x]

18. Auto Configure(Command: j u)

► To adjust picture position and minimize image shaking automatically. It works only in RGB (PC) mode.

Transmission [j][u][ ][Set ID][ ][Data][Cr]

Data 01: To set

Ack [u][ ][Set ID][ ][OK/NG][Data][x]

19. Tune Command (Command: m a)

► Select channel to following physical number.

Transmission [m][a][ ][Set ID][ ][Data0][ ][Data1][ ][Data2][Cr]

Data00 : High channel data
Data01 : Low channel data
ex. No. 47 -> 00 2F (2FH)
No. 394 -> 01 8A (18AH),
DTV No. 0 -> Don't care
Data02 : [Antena]
0x00 : Analog Main
0x10 : DTV Main
0x20 : Radio

[Cable]
0x80 : Analog Main
0x90 : DTV Main
0xA0 : Radio

Channel data range
Analogue - Min: 00 to Max: 63 (0 to 99)
Digital - Min: 00 to Max: 3E7 (0 to 999)

Ack [a][ ][Set ID][ ][OK/NG][Data][x]

Data Min: 00 to Max: 7DH

20. Programme Add/Skip(Command: m b)

► To set skip status for the current Programme.

Transmission [m][b][ ][Set ID][ ][Data][Cr]

Data 00 : Skip 01 : Add

Ack [b][ ][Set ID][ ][OK/NG][Data][x]

21. Key(Command: m c)

► To send IR remote key code.

Transmission [m][c][ ][Set ID][ ][Data][Cr]

Data Key code - See p.23.

Ack [c][ ][Set ID][ ][OK/NG][Data][x]

22. Control Back Light(Command: m g)

► To control the back light.

Transmission [m][g][ ][Set ID][ ][Data][Cr]

Data Min : 00 to Max : 64

Ack [g][ ][Set ID][ ][OK/NG][Data][x]

23. Input select (Command: x b)

(Main Picture Input)

► To select input source for main picture.

Transmission [x][b][ ][Set ID][ ][Data][Cr]

Data Structure

MSB LSB

0	0	0	0	0	0	0	0

External Input — Input Number

External Input				Data
0	0	0	0	DTV
0	0	0	1	Analogue
0	0	1	0	AV
0	1	0	0	Component
0	1	1	0	RGB
0	1	1	1	HDMI
1	0	0	0	
1	0	0	1	
1	0	1	0	

Input Number				Data
0	0	0	0	Input1
0	0	0	1	Input2
0	0	1	0	Input3
0	0	1	1	Input4

Ack [b][ ][Set ID][ ][OK/NG][Data][x]

* **Real data mapping**

00 : Step 0
⋮
A : Step 10 (Set ID 10)
⋮
F : Step 15 (Set ID 15)
10 : Step 16 (Set ID 16)
⋮
64 : Step 100
⋮
6E : Step 110
⋮
73 : Step 115
74 : Step 116
⋮
CF : Step 199
⋮
FE : Step 254
FF : Step 255



The model and serial numbers of the TV is located on the back of the TV
Record it below should you ever need service.

Model _____

Serial _____

