LG
Life's Good

ENGLISH

OWNER'S MANUAL
Micro Hi-Fi System

Please read this manual carefully before operating your set and retain it for future reference.

CM2130 (CM2130, CMS2130F)



CM2130-FU.ACOLLLK ENG 6447.indd 2 2013-06-13 3:50:46

Safety Information



CAUTION: TO REDUCE THE RISK OF ELECTRIC SHOCK DO NOT REMOVE COVER (OR BACK) NO USER-SERVICEABLE PARTS INSIDE REFER SERVICING TO QUALIFIED SERVICE PERSONNEL.



This lightning flash with arrowhead symbol within an equilateral triangle is intended to alert the user to the presence of uninsulated dangerous voltage within the product's enclosure that may be of sufficient magnitude to constitute a risk of electric shock to persons.



The exclamation point within an equilateral triangle is intended to alert the user to the presence of important operating and maintenance (servicing) instructions in the literature accompanying the product.

WARNING: TO PREVENT FIRE OR ELECTRIC SHOCK HAZARD, DO NOT EXPOSE THIS PRODUCT TO RAIN OR MOISTURE.

WARNING: Do not install this equipment in a confined space such as a book case or similar unit.

CAUTION: Do not block any ventilation openings. Install in accordance with the manufacturer's instructions.
Slots and openings in the cabinet are provided for ventilation and to ensure reliable operation of the product and to protect it from over heating. The openings shall be never be blocked by placing the product on a bed, sofa, rug or other similar surface. This product shall not be placed in a built-in installation such as a bookcase or rack unless proper ventilation is provided or the manufacturer's instruction has been adhered to.

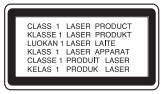

CAUTION: This product employs a Laser System. To ensure proper use of this product, please read this owner's manual carefully and retain it for future reference. Shall the unit require maintenance, contact an authorized service centre.
Use of controls, adjustments or the performance of procedures other than those specified herein may result in hazardous radiation exposure.
To prevent direct exposure to laser beam, do not try to open the enclosure.

CAUTION concerning the Power Cord

Most appliances recommend they be placed upon a dedicated circuit;

That is, a single outlet circuit which powers only that appliance and has no additional outlets or branch circuits. Check the specification page of this owner's manual to be certain. Do not overload wall outlets. Overloaded wall outlets, loose or damaged wall outlets, extension cords, frayed power cords, or damaged or cracked wire insulation are dangerous. Any of these conditions could result in electric shock or fire. Periodically examine the cord of your appliance, and if its appearance indicates damage or deterioration, unplug it, discontinue use of the appliance, and have the cord replaced with an exact replacement part by an authorized service centre. Protect the power cord from physical or mechanical abuse, such as being twisted, kinked, pinched, closed in a door, or walked upon. Pay particular attention to plugs, wall outlets, and the point where the cord exits the appliance. To disconnect power from the mains, pull out the mains cord plug. When installing the product, ensure that the plug is easily accessible.

This device is equipped with a portable battery or accumulator.

Safety way to remove the battery or the battery from the equipment: Remove the old battery or battery pack, follow the steps in reverse order than the assembly. To prevent contamination of the environment and bring on possible threat to human and animal health, the old battery or the battery put it in the appropriate container at designated collection points. Do not dispose of batteries or battery together with other waste. It is recommended that you use local, free reimbursement systems batteries and accumulators. The battery shall not be exposed to excessive heat such as sunshine, fire or the like.

CAUTION: The apparatus shall not be exposed to water (dripping or splashing) and no objects filled with liquids, such as vases, shall be placed on the apparatus.

Table of Contents

1 Getting Started

3 Safety Information
6 Unique Features
6 Accessories
6 Playable file Requirement
6 – MP3/WMA music file requirement
7 – Compatible USB Devices
7 – USB device requirement
8 Remote Control
9 Front Panel
10 Rear Panel

2 Connecting

11 Connecting to speakers
11 – Attaching the speakers to the unit
11 Antenna Connection
12 Optional Equipment Connection
12 – USB Connection
12 – PORT. IN Connection
12 – Headphone connection

3 Operating

13 Basic Operations
13 – CD/USB Operations
13 – Selecting a folder
14 Other Operations
14 – Programmed Playback
14 – Turn off the sound temporarily
14 – Displaying file information (ID3 TAG)
14 – Listening to music from your external device
14 – Auto Power Down
15 Radio Operations
15 – Listening to the radio
15 – Improving poor FM reception
15 – Presetting the Radio Stations
15 – Deleting all the saved stations
16 Setting the Clock
16 – Setting the alarm
17 – Sleep Timer Setting
17 – Dimmer
17 Sound adjustment
17 – Setting the surround mode
18 Advanced Operation
18 – Recording to USB
18 – To select recording bit rate and speed (AUDIO CD only)

4 Troubleshooting

19 Troubleshooting

5 Appendix

20 Specifications
21 Maintenance
21 – Handling the Unit
21 – Notes on Discs
21 Trademarks and Licenses

Unique Features

Portable In

Listens to music from your portable device. (MP3, Notebook, etc)

Radio

Listens to the radio.

USB

Listens to music from your USB device.

Alarm

Sets alarm which go off at desired time.

Accessories

Please check and identify the supplied accessories.

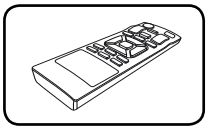

Remote Control (1)

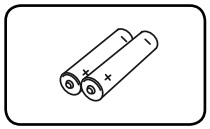

Batteries (2)

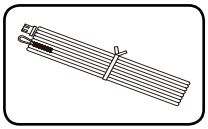

FM Antenna (1)

Playable file Requirement

MP3/WMA music file requirement

MP3/ WMA file compatibility with this unit is limited as follows.

- Sampling Frequency : 8 - 48 kHz (MP3), 8 - 48 kHz (WMA)
- Bit rate : 32 - 320 kbps (MP3), 32 - 320 kbps (WMA)
- Maximum files : Under 999
- File extensions : ".mp3"/ ".wma"
- CD-ROM file format : ISO 9660/JOLIET
- We recommend that you use "Easy-CD Creator", which creates an ISO 9660 file system.
- You have to set the disc format option to [Mastered] in order to make the discs compatible with the LG players when formatting rewritable discs. When setting the option to Live File System, you cannot use it on LG players. (Mastered/Live File System : Disc format system for Windows Vista)

Compatible USB Devices

- MP3 Player : Flash type MP3 player.
- USB Flash Drive :
  Devices that support USB 2.0 or USB 1.1.
- The USB function of this unit does not support all USB devices.

USB device requirement

- Devices which require additional program installation when you have connected it to a computer, are not supported.
- Do not extract the USB device while in operation.
- For a large capacity USB, it may take longer than a few minute to be searched.
- To prevent data loss, back up all data.
- If you use a USB extension cable or USB hub, the USB device is not recognized.
- Using NTFS file system is not supported.
  (Only FAT(16/32) file system is supported.)
- This unit is not supported when the total number of files is 1,000 or more.
- External HDD, Card readers, Locked devices, or hard type USB devices are not supported.
- USB port of the unit cannot be connected to PC. The unit cannot be used as a storage device.
- Some USB may not work with this unit.

Remote Control

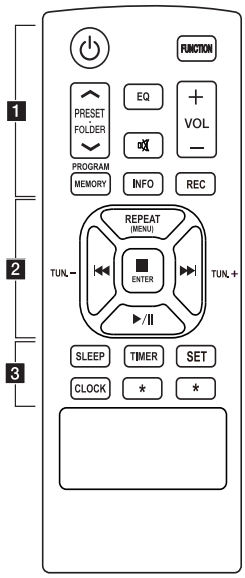

Battery Installation

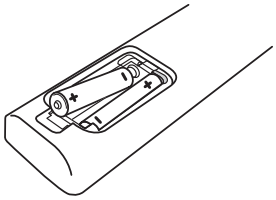

Remove the batteries cover on the rear of the Remote Control, and insert two (size AAA) batteries with ⊕ and ⊖ matched correctly.

1

⏻(Power ON/OFF) : Switches the unit ON or OFF.

FUNCTION : Selects the function and input source.

PRESET·FOLDER Λ/V :

- Searches for a folder of MP3/ WMA files. When a CD/ USB containing MP3/ WMA files in several folders is being played, press **PRESET·FOLDER Λ/V** to select the folder you want to play.
- Choose a preset number for a radio station.

VOL (+/-) : Adjusts speaker volume.

EQ : Chooses sound impressions.

🔇 : Mutes the sound.

PROGRAM/MEMORY :

- Stores radio stations.
- Creates a playlist you want to listen to.

INFO : Checks information about your music.

REC : USB direct recording.

2

REPEAT(MENU) : Listens to your tracks/files repeatedly or randomly.

■ **ENTER** : Stops playback or recording.

I◀◀/▶▶I (Skip/Search) :

- Skips fast backward or forward.
- Searches for a section within a track/file.

TUN. (-/+) : Selects the radio station.

▶/II(Play/Pause) :

- Starts or pauses playback.
- Selects STEREO/MONO.

3

SLEEP : Sets the system to turn off automatically at a specified time.

CLOCK : Sets the clock and checks the time.

TIMER : With the TIMER function you can turn CD, USB play and TUNER reception on or off at a desired time.

SET : Confirms the setting.

(Refer to the page 16).

✱ : The button is not available for any function.

Front Panel

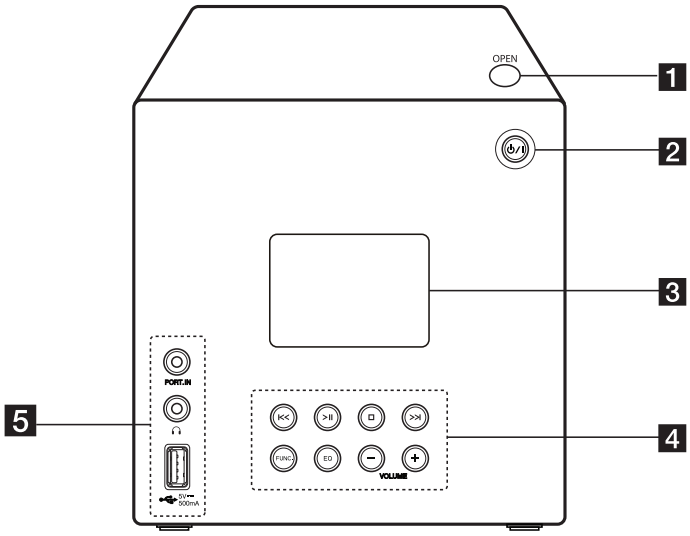

1 OPEN
Opens and closes the disc door.

2 ⏻/I (Power ON/OFF)
Switches the unit ON or OFF.

3 Display window

4 I<< / >>I (Skip/Search)
- Searches backward or forward.
- Skips to the previous/next track/file.

□(Stop)
Stops playback or recording.

>II(Play/Pause)
- Starts or pauses playback.
- Selects stereo/mono.

FUNC.(Function)
Selects the function or input source.

EQ
Chooses sound impressions.

VOLUME (-/+)
Adjusts the speaker volume.

5 PORT. IN
Listens to music from your portable device.

(Head Phone)
Listens to music with your headphone.
(3.5 mm)

USB Port
Plays sound files by connecting the USB device.

Rear Panel

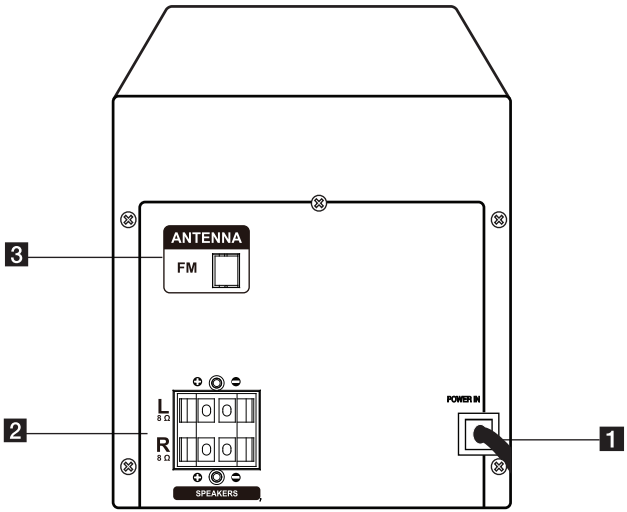

1 **POWER IN**
2 **SPEAKERS** terminal (**R/L**)
3 **FM ANTENNA**

Connecting to speakers

Attaching the speakers to the unit

To connect the cable to the unit, press each plastic finger pad to open the connection terminals on the unit. Insert the wire and release the finger pad.

Connect the black wire to the terminals marked - (minus) and the other end to the terminals marked + (plus).

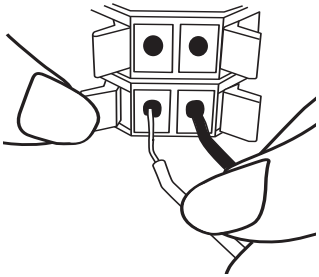

Caution

The speakers contain magnet parts, so color irregularity may occur on the TV screen or PC monitor screen. Please use the speakers far away from either TV screen or PC monitor.

Color	Position
Red	Front
White	Front

Antenna Connection

Connect the supplied FM antenna for listening to the radio.

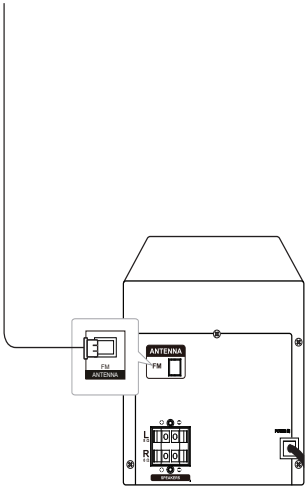

Note

Be sure to fully extend the FM wire antenna.

Optional Equipment Connection

USB Connection

Connect the USB Memory (or MP3 player, etc.) to the USB port on the front of the unit.

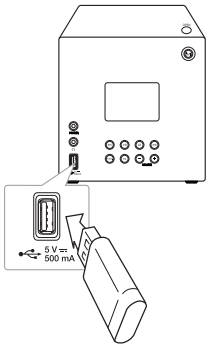

Note

- Removing the USB Device from the unit
  1. Choose a different function/mode or press ■ **ENTER** on the remote control or □ on the unit twice in a row.
  2. Remove the USB device from the unit.

PORT. IN Connection

Connect an output (earphone or line out) of portable device (MP3 or PMP etc) to the PORT. IN connector.

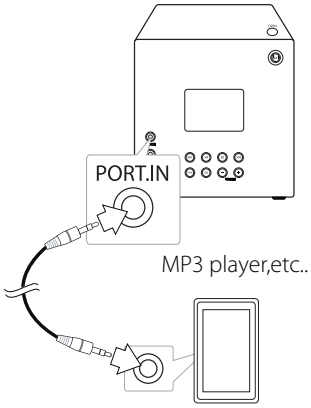

Headphone connection

Connect a pair of stereo headphones (∅ 3.5 mm phone plug) to ∩ (Head Phone) jack on the unit for private listening.

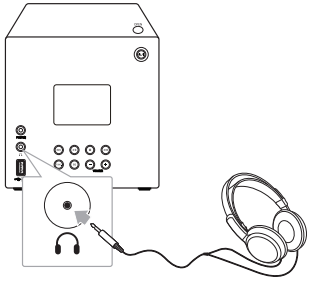

Note

You can't hear any sound from speakers, while the headphones plug is inserted in the ∩ (Head Phone) jack.

Basic Operations

CD/USB Operations

1. Insert the disc by pressing **OPEN** or connect the USB device to the USB port.
2. Select the CD or USB function by pressing **FUNCTION** on the remote control or **FUNC.** on the unit.
3. Select a track/file you want to play by pressing **I◀◀ / ▶▶I** on the remote control or **I≪ / ≫I** on the unit.

To	Do this
Stop	Press ■**ENTER** on the remote control or □ on the unit.
Playback	Press ▶/II on the remote control or ≻II on the unit.
Pause	During playback, press ▶/II on the remote control or ≻II on the unit.
Skip to the next/previous track/file	During playback, press ▶▶I on the remote control or ≫I on the unit to go to the next track/file. Playing less than 2 seconds, press I◀◀ on the remote control or I≪ on the unit to go to the previous track/file. Playing after 3 seconds, press I◀◀ on the remote control or I≪ on the unit to go to the beginning of the track/file.
Search for a section within a track	Press and hold I◀◀/▶▶I on the remote control or **I≪ / ≫I** on the unit during playback and release it at the point you want to listen to.
Play repeatedly or randomly	Press **REPEAT(MENU)** on the remote control repeatedly, the display will be changed in the following order. REPEAT1 -> FOLDER REPEAT (MP3/WMA only) -> REPEAT ALL -> RANDOM -> REPEAT OFF

The DTS is not supported.

Selecting a folder

1. In stop status,press **PRESET· FOLDER Λ/V** on the remote control repeatedly until a desired folder appears.
2. Press ▶/II to play it. The first file of folder will be played. (During playback, if you selecting a folder you want, this step is not necessary.)

Note

- Folders/Files on the CD or USB are recognized as below.

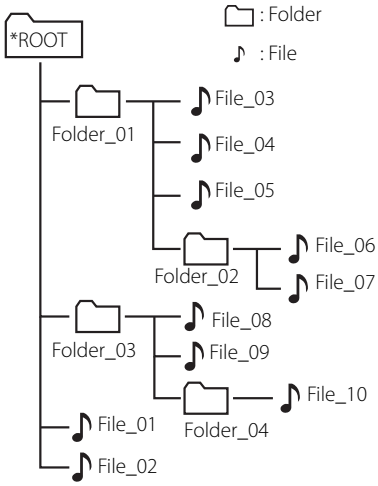

- Files and folders will be presented in order recorded and may be presented differently according to the record circumstances.
- Folders and files will be presented as the following order :
  Folder : Folder_01 → Folder_03 → Folder_02 → Folder_04
  File : File_01 → File_02 → File_03→ File_04 → File_05 → File_08 → File_09 → File_06 → File_07 → File_10
- *ROOT : It is "ROOT" which is the first screen you can see when a computer recognizes the storage device.

Other Operations

Programmed Playback

The program function enables you to store your favorite files from any disc or USB device.

A program can contain 64 tracks/files.

1. Insert a CD or a USB and wait for it to be ordered.
2. Press **PROGRAM/MEMORY** on the remote control in stop status.
3. Press ⏮/⏭ on the remote control or ⏮ / ⏭ on the unit to select a track/file.
4. Press **PROGRAM/MEMORY** on the remote control again to save and select a next track/file.
5. Press ▶/⏸ on the remote control or ▶⏸ on the unit to play the programmed music tracks/files.
6. To clear your selection, press ■**ENTER** on the remote control or ☐ on the unit twice.

Note

The programs are also cleared when the disc or USB device is removed, the unit is powered off or the function is switched to others.

Turn off the sound temporarily

Press 🔇 on the remote control to mute your sound.
You can mute your sound, for example, to answer the telephone, "🔇" will appear for a while in the display window.

To cancel it, press 🔇 again or change the volume level.

Displaying file information (ID3 TAG)

While playing an MP3/WMA file containing file information, you can display the information by pressing **INFO**.

Listening to music from your external device

The unit can be used to play the music from many types of external device.
(Refer to the page 12)

1. Connect the external device to the PORT. IN connector of the unit.
2. Turn the power on by pressing ⏻/|.
3. Select the PORTABLE function by pressing **FUNCTION** on the remote control or **FUNC.** on the unit
4. Turn the external device and start playing your music.

Auto Power Down

This unit will be off itself to save electronic consumption in the case main unit is not connected to external device and is not used for 25 minutes. So does this unit after 6 hours since Main unit has been connected to other device using analog input.

Radio Operations

Listening to the radio

1. Press **FUNCTION** on the remote control or **FUNC.** on the unit until FM appears in the display window.
   The last received station is tuned in.
2. Auto tuning : Press **TUN. (-/+)** on the remote control or **I<< / >>I** on the unit for about 2 seconds until the frequency indication starts changing, then release. scanning stops when the unit tunes in a station.

   Manual tuning: Press **TUN. (-/+)** on the remote control or **I<< / >>I** on the unit repeatedly.
3. Adjust the volume by using **VOL (+/-)** on the remote control or **VOLUME (-/+)** on the unit repeatedly.

Improving poor FM reception

Press ▶/II on the remote control or **>II** on the unit. This will change the tuner from stereo to mono. Then the reception will be better than before.

Presetting the Radio Stations

You can preset 50 stations for FM.

Before tuning, make sure to turn down the volume.

1. Press **FUNCTION** on the remote control or **FUNC.** on the unit until FM appears in the display window.
2. Select the desired frequency by pressing **TUN. (-/+)** on the remote control or **I<< / >>I** on the unit.
3. Press **PROGRAM/MEMORY**. A preset number will blink in the display window.
4. Press **PRESET·FOLDER ∧/∨** on the remote control to select the preset number you want.
5. Press **PROGRAM/MEMORY**. The station is stored.
6. Repeat steps 2 to 5 to store other stations.
7. To listen a preset station, press **PRESET·FOLDER ∧/∨** on the remote control.

Deleting all the saved stations

1. Press and hold **PROGRAM/MEMORY** for two seconds. "ERASE" will blink in the display window.
2. Press **PROGRAM/MEMORY** to erase all saved radio stations

Setting the Clock

1. Turn the unit on.
2. Press and hold **CLOCK**.
3. Choose time mode by pressing ⏮/⏭.
   - 12:00(for an AM and PM display) or 0:00(for a 24hour display)
4. Press **SET** to confirm your selection.
5. Select the hours by pressing ⏮/⏭.
6. Press **SET**.
7. Select the minutes by pressing ⏮/⏭.
8. Press **SET**.
9. If you want to reset the clock, repeat steps 2-8.

Setting the alarm

You can use the unit as an alarm clock.
You have to set the clock before setting the alarm.

1. Turn the unit on.
2. Press and hold **TIMER**.
3. Each of functions will blink. Press **SET** to select a sound source you want. (CD/USB/TUNER)
   If you select FM function, select a preset station by pressing ⏮/⏭.
4. "ON TIME" will be displayed. This is your desired time to the unit turns on.
   Press ⏮/⏭ to change the hours and minutes and press **SET** to save.
5. "OFF TIME" will be displayed. This is your desired time to the unit turns off.
   Press ⏮/⏭ to change the hours and minutes and press **SET** to save.
6. Press ⏮/⏭ to change the volume and press **SET** to save.
7. You can check the setting status.
8. If you want to reset the alarm, repeat steps 2-6.

Note

- If you set the clock time and alarm, you can check the time by pressing **CLOCK** or the alarm by pressing **TIMER**.
- If the alarm is already set, press **TIMER** once to cancel the alarm. To activate the alarm, press **TIMER** once again.
- If the clock time or the alarm is already set, press and hold **CLOCK** or **TIMER** for at least 2 seconds to reset the clock timer or the alarm.
- Alarm function only works when the unit is turned off.
- If the time you set is up, the unit will be turned on automatically.

Sleep Timer Setting

Press **SLEEP** repeatedly to select delay time between 10 and 180 minutes. After the delay time, the unit will be turned off. (You can see the following order, 180 ->150 -> 120 -> 90 -> 80 -> 70 -> 60 -> 50 -> 40 -> 30 -> 20 -> 10)

To cancel the sleep function, press **SLEEP** repeatedly until the display window get bright.

Note

- Press **SLEEP**. The remaining time appears in the display window.
- Sleep function will work after dimmer function.

Dimmer

Press **SLEEP** once. The display window will be darkened by half. To cancel it, press **SLEEP** repeatedly until the display window get bright.

Sound adjustment

Setting the surround mode

This system has a number of pre-set surround sound fields. You can select a desired sound mode by using **EQ.**

The displayed items for the Equalizer may be different depending on sound sources and effects.

On Display	Description
AUTO EQ	Sets the sound equalizer on the mode that is the most similar to the genre which is included in the MP3 ID3 tag of song files.
MP3 -- OPT	This function is optimized for compressible MP3/WMA file. It improves the treble sound.
POP CLASSIC ROCK	This program lends an enthusiastic atmosphere to the sound, giving you the feeling you are at an actual pop, classic or rock concert.
BASS	Reinforce the treble, bass and surround sound effect.
BYPASS	You can enjoy the sound without equalizer effect.

Note

Maybe you need to reset the surround mode, after switching the input, sometimes even after the sound track changed.

Advanced Operation

Recording to USB

You can record various sound sources to USB.

1. Connect the USB device to the unit.
2. Select a function by pressing **FUNCTION** on the remote control or **FUNC.** on the unit.

   One track/file recording - You can record to USB after playing a track/file you want.

   All tracks/files recording - You can record to USB after stop.

   Program list recording - After showing the programmed list, you can record it to USB. (Refer to page 14)
3. Start the recording by pressing **REC** on the remote control.
4. To stop recording, press ■ **ENTER** on the remote control or ☐ on the unit.

Pausing recording

During recording, press **REC** on the remote control to pause recording. Press it again to restart recording.
(Only Radio)

To select recording bit rate and speed (AUDIO CD only)

1. Press **REC** on the remote control for longer than 3 seconds.
2. Use ⏮/⏭ on the remote control or ⏮ / ⏭ on the unit to select the bit rate.
3. Press **REC** on the remote control again to select the recording speed.
4. Press ⏮/⏭ on the remote control or ⏮ / ⏭ on the unit to select a desired recording speed :

   X1 SPEED
   - You can listen to music while recording it.

   X2 SPEED
   - You can just record the music file.
5. Press **REC** on the remote control to finish the setting.

Note

- You can check the recording percentage rate for the USB record on the display window during the recording. (MP3/WMA CD Only)
- During recording MP3/WMA, there is no sound.
- When you stop recording during playback, the file that has been recorded at that time will be stored. (Except MP3/WMA files)
- Do not remove the USB device or turn off the unit during USB recording. If not, an incomplete file may be made and not deleted on PC.
- If USB recording does not work, the message like "NO USB", "ERROR", "FULL" or "NO REC" is displayed on the display window.
- Multi card reader device or External HDD can not be used for USB recording.
- A file is recorded by about 512 Mbyte when you record for a long term.
- You may not store more than 999 files.
- It'll be stored as follows.

AUDIO CD	MP3/WMA	The other source*
CD_REC TRK_001 TRK_002 ⋮	FILE_REC ABC(File name) DEF(File name) ⋮	EXT_REC AUDIO_001 AUDIO_002 ⋮

* : TUNER and the like.

The making of unauthorized copies of copy-protected material, including computer programs, files, broadcasts and sound recordings, may be an infringement of copyrights and constitute a criminal offense. This equipment should not be used for such purposes.
Be responsible
Respect copyrights

Troubleshooting

Problem	Cause & Correction
No Power.	• The power cord is not plugged in. Plug in the power cord. • Check whether electricity failed. Check the condition by operating other electronic devices.
No sound.	• Check whether you select the right function. Press **FUNC.** and check the selected function. • Speaker cables are not connect correctly. Connect the speaker cables correctly. • The volume is set to minimum. Use the **VOLUME (-/+)** to adjust the volume.
The unit does not start playback.	• An unplayable disc is inserted. Insert a playable disc. • No disc is inserted. Insert a disc. • The disc is dirty. Clean the disc. (Refer to the page 21) • The disc is inserted upside down. Place the disc with the label or printed side facing upwards.
Radio stations cannot be tuned in properly.	• The antenna is positioned poorly. Adjust its position. • The signal strength of the radio station is too weak. Tune to the station manually. • No stations have been preset or preset stations have been cleared (when being tuned by scanning preset channels). Preset some radio stations, see page 15 for details.
The remote control does not work properly.	• The remote control is not pointed at the remote sensor of the unit. Point the remote control at the remote sensor of the unit. • The remote control is too far from the unit. Operate the remote control within about 16 ft (5 m). • There is an obstacle in the path of the remote control and the unit. Remove the obstacle. • The batteries in the remote control are exhausted. Replace the batteries with new ones.

Specifications

General	
Power supply	Refer to the main label.
Power consumption	Refer to the main label.
Net Weight	1.1kg
External dimensions (W x H x D)	150 x 152 x 200 mm
Operating conditions Temperature	5 °C to 35 °C (41 °F to 95 °F)
Operating humidity	5 % to 85 %
Bus Power Supply (USB)	DC 5 V ⎓ 500 mA

Inputs	
PORT. IN	0.6 Vrms (3.5 mm stereo jack) x 1

Tuner	
FM Tuning Range	87.5 to 108.0 MHz or 87.50 to 108.00 MHz

Amplifier	
Output Power	5 W + 5 W

CD	
Frequency Response	40 Hz to 20 kHz
Signal-to-noise ratio	70 dB
Dynamic range	55 dB

Speakers	
Type	1 Way 1 Speaker
Impedance	8 Ω
Rated Input Power	10 W
Max. Input Power	20 W
Net Dimensions (WxHxD)	150 x 152 x 200 mm
Net Weight (1EA)	0.9 kg

- Design and specifications are subject to change without notice.

Maintenance

Handling the Unit

When shipping the unit

Please save the original shipping carton and packing materials. If you need to ship the unit, for maximum protection, re-pack the unit as it was originally packed at the factory.

Keeping the exterior surfaces clean

Do not use volatile liquids such as insecticide spray near the unit.

Wiping with strong pressure may damage the surface.

Do not leave rubber or plastic products in contact with the unit for a long period of time.

Cleaning the unit

To clean the player, use a soft, dry cloth. If the surfaces are extremely dirty, use a soft cloth lightly moistened with a mild detergent solution. Do not use strong solvents such as alcohol, benzine, or thinner, as these might damage the surface of the unit.

Maintaining the Unit

The unit is a high-tech, precision device. If the optical pick-up lens and disc drive parts are dirty or worn, the picture quality could be diminished. For details, please contact your nearest authorized service centre.

Notes on Discs

Handling Discs

Never stick paper or tape on the disc.

Storing Discs

After playing, store the disc in its case. Do not expose the disc to direct sunlight or sources of heat and never leave it in a parked car exposed to direct sunlight.

Cleaning Discs

Do not use strong solvents such as alcohol, benzine, thinner, commercially available cleaners, or anti-static spray intended for old vinyl records.

Trademarks and Licenses





CM2130-FU.ACOLLLK ENG 6447.indd 22 2013-06-13 3:50:47