LG
Life's Good

LG OLED TV

THE ULTIMATE DISPLAY

OWNER'S MANUAL

Please read this manual carefully before operating your set and retain it for future reference.

55EA8800

P/NO : MFL67652772 (1402-REV00)

www.lg.com

IMPORTANT SAFETY INSTRUCTIONS

Always comply with the following precautions to avoid dangerous situations and ensure peak performance of your product.



TO REDUCE THE RISK OF ELECTRIC SHOCK DO NOT REMOVE COVER (OR BACK).
NO USER SERVICEABLE PARTS INSIDE.
REFER TO QUALIFIED SERVICE PERSONNEL.

The lightning flash with arrowhead symbol, within an equilateral triangle, is intended to alert the user to the presence of uninsulated dangerous voltage within the product's enclosure that may be of sufficient magnitude to constitute a risk of electric shock to persons.

The exclamation point within an equilateral triangle is intended to alert the user to the presence of important operating and maintenance (servicing) instructions in the literature accompanying the appliance.

WARNING/CAUTION
TO REDUCE THE RISK OF FIRE AND ELECTRIC SHOCK, DO NOT EXPOSE THIS PRODUCT TO RAIN OR MOISTURE.

WARNING

If you ignore the warning message, you may be seriously injured or there is a possibility of accident or death.

CAUTION

If you ignore the caution message, you may be slightly injured or the product may be damaged.

NOTE

The note helps you understand and use the product safely. Please read the note carefully before using the product.

Read these instructions.
Keep these instructions.
Heed all warnings.
Follow all instructions.



- Do not use this apparatus near water.



- Clean only with a dry cloth.



- Do not block any ventilation openings. Install in accordance with the manufacturer's instructions.



- Do not install near any heat sources such as radiators, heat registers, stoves, or other apparatus (including amplifiers) that produce heat.



- Do not defeat the safety purpose of the polarized or grounding-type plug. A polarized plug has two blades with one wider than the other. A grounding type plug has two blades and a third grounding prong. The wide blade or the third prong are provided for your safety. If the provided plug does not fit into your outlet, consult an electrician for replacement of the obsolete outlet (Can differ by country).

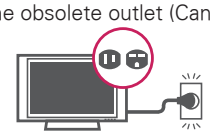

- Do not press strongly upon the panel with a hand or a sharp object such as a nail, pencil or pen, or make a scratch on it.

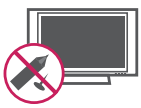

ENGLISH

- Protect the power cord from being walked on or pinched particularly at plugs, convenience receptacles, and the point where they exit from the apparatus.



- Only use attachments/accessories specified by the manufacturer.



- Use only with a cart, stand, tripod, bracket, or table specified by the manufacturer, or sold with the apparatus. When a cart is used, use caution when moving the cart/ apparatus combination to avoid injury from tip-over.



- Unplug this apparatus during lightning storms or when unused for long periods of time.

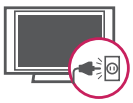

- Refer all servicing to qualified service personnel. Servicing is required when the apparatus has been damaged in any way, such as power-supply cord or plug is damaged, liquid has been spilled or objects have fallen into the apparatus, the apparatus has been exposed to rain or moisture, does not operate normally, or has been dropped.



- Do not stick metal objects or any other conductive material into the power cord. Do not touch the end of the power cord while it is plugged in.
- Keep the packing anti-moisture material or vinyl packing out of the reach of children. Anti-moisture material is harmful if swallowed. If swallowed by mistake, force the patient to vomit and visit the nearest hospital. Additionally, vinyl packing can cause suffocation. Keep it out of the reach of children.

- CAUTION concerning the Power Cord
  (Can differ by country)
  It is recommended that appliances be placed upon a dedicated circuit; that is, a single outlet circuit which powers only that appliance and has no additional outlets or branch circuits. Check the specification page of this owner's manual to be certain. Do not connect too many appliances to the same AC power outlet as this could result in fire or electric shock. Do not overload wall outlets. Overloaded wall outlets, loose or damaged wall outlets, extension cords, frayed power cords, or damaged or cracked wire insulation are dangerous. Any of these conditions could result in electric shock or fire. Periodically examine the cord of your appliance, and if its appearance indicates damage or deterioration, unplug it, discontinue use of the appliance, and have the cord replaced with an exact replacement part by an authorized service. Protect the power cord from physical or mechanical abuse, such as being twisted, kinked, pinched, closed in a door, or walked upon. Pay particular attention to plugs, wall outlets, and the point where the cord exits the appliance. Do not move the TV with the power cord plugged in. Do not use a damaged or loose power cord. Be sure do grasp the plug when unplugging the power cord. Do not pull on the power cord to unplug the TV.



- **Warning** - To reduce the risk of fire or electrical shock, do not expose this product to rain, moisture or other liquids. Do not touch the TV with wet hands. Do not install this product near flammable objects such as gasoline or candles, or expose the TV to direct air conditioning.



- Do not expose to dripping or splashing and do not place objects filled with liquids, such as vases, cups, etc. on or over the apparatus (e.g. on shelves above the unit).



ENGLISH

- **Grounding**
  (Except for devices which are not grounded.)
  Ensure that you connect the earth ground wire to prevent possible electric shock (i.e. a TV with a three-prong grounded AC plug must be connected to a three-prong grounded AC outlet). If grounding methods are not possible, have a qualified electrician install a separate circuit breaker. Do not try to ground the unit by connecting it to telephone wires, lightening rods, or gas pipes.

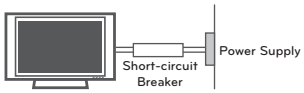

- As long as this unit is connected to the AC wall outlet, it is not disconnected from the AC power source even if the unit is turned off.
- Do not attempt to modify this product in any way without written authorization from LG Electronics. Unauthorized modification could void the user's authority to operate this product.
- **Outdoor Antenna Grounding**
  (Can differ by country)
  If an outdoor antenna is installed, follow the precautions below. An outdoor antenna system should not be located in the vicinity of overhead power lines or other electric light or power circuits, or where it can come in contact with such power lines or circuits as death or serious injury can occur. Be sure the antenna system is grounded so as to provide some protection against voltage surges and built-up static charges. Section 810 of the National Electrical Code (NEC) in the U.S.A. provides information with respect to proper grounding of the mast and supporting structure, grounding of the lead-in wire to an antenna discharge unit, size of grounding conductors, location of antenna discharge unit, connection to grounding electrodes and requirements for the grounding electrode.
  Antenna grounding according to the National Electrical Code, ANSI/NFPA 70

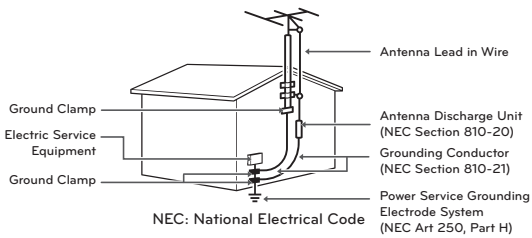

- **Cleaning**
  When cleaning, unplug the power cord and wipe gently with a soft cloth to prevent scratching. Do not spray water or other liquids directly on the TV as electric shock may occur. Do not clean with chemicals such as alcohol, thinners or benzine.
- **Moving**
  Make sure the product is turned off, unplugged and all cables have been removed. It may take 2 or more people to carry larger TVs. Do not press or put stress on the front panel of the TV.
- **Ventilation**
  Install your TV where there is proper ventilation. Do not install in a confined space such as a bookcase. Do not cover the product with cloth or other materials while plugged. Do not install in excessively dusty places.
- If you smell smoke or other odors coming from the TV, unplug the power cord and contact an authorized service center.
- Keep the product away from direct sunlight.
- Never touch this apparatus or antenna during a thunder or lightning storm.
- When mounting a TV on the wall, make sure not to install the TV by hanging the power and signal cables on the back of the TV.
- Do not allow an impact shock or any objects to fall into the product, and do not drop anything onto the screen.
- **Disconnecting the Main Power**
  The power outlet used with this device must remain easily accessible.
- Store the accessories (battery, etc.) in a safe location out of the reach of children.
- This apparatus use batteries. In your community there might be regulations that require you to dispose of these batteries properly due to environmental considerations. Please contact your local authorities for disposal or recycling information.
- Do not dispose of batteries in a fire.
- Do not short circuit, disassemble or allow the batteries to overheat.

- **Dot Defect**
  The Plasma or LCD panel is a high technology product with resolution of two million to six million pixels. In a very few cases, you could see fine dots on the screen while you're viewing the TV. Those dots are deactivated pixels and do not affect the performance and reliability of the TV.
- **Generated Sound**
  Cracking noise A cracking noise that occurs when watching or turning off the TV is generated by plastic thermal contraction due to temperature and humidity. This noise is common for products where thermal deformation is required.
  Electrical circuit humming/panel buzzing A low level noise is generated from a high-speed switching circuit, which supplies a large amount of current to operate a product. It varies depending upon the product.
  This generated sound does not affect the performance and reliability of the product.
- Take care not to touch the ventilation openings. When watching the TV for a long period, the ventilation openings may become hot. This does not affect the performance of the product or cause defects in the product.
- If the TV feels cold to the touch, there may be a small flicker when it is turned on. This is normal, there is nothing wrong with TV. Some minute dot defects may be visible on the screen, appearing as tiny red, green, or blue spots. However, they have no adverse effect on the TV's performance. Avoid touching the LCD screen or holding your finger(s) against it for long periods of time. Doing so may produce some temporary distortion effects on the screen.

Preventing Image burn or Burn-in on your TV screen

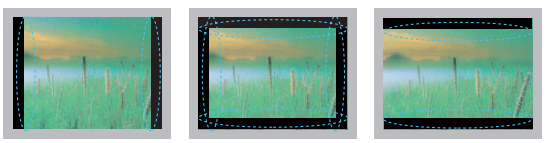

- If a fixed image displays on the TV screen for a long period of time, it will be imprinted and become a permanent disfigurement on the screen. This is image burn or burn-in and not covered by the warranty.
- If the aspect ratio of the TV is set to 4:3 for a long period of time, image burn may occur on the letterboxed area of the screen.
- Avoid displaying a fixed image on the TV screen for a long period of time (1 or more hours for OLED) to prevent image burn.

ENGLISH

Viewing 3D Imaging

⚠ WARNING

Viewing Environment

- Viewing Time
  - When watching 3D contents, take 5 - 15 minute breaks every hour. Viewing 3D contents for a long period of time may cause headache, dizziness, fatigue or eye strain.

Those that have a photosensitive seizure or chronic illness

- Some users may experience a seizure or other abnormal symptoms when they are exposed to a flashing light or particular pattern from 3D contents.
- Do not watch 3D videos if you feel nausea, are pregnant and/ or have a chronic illness such as epilepsy, cardiac disorder, or blood pressure disease, etc.
- 3D Contents are not recommended to those who suffer from stereo blindness or stereo anomaly. Double images or discomfort in viewing may be experienced.
- If you have strabismus (cross-eyed), amblyopia (weak eyesight) or astigmatism, you may have trouble sensing depth and easily feel fatigue due to double images. It is advised to take frequent breaks than the average adult.
- If your eyesight varies between your right and left eye, revise your eyesight prior to watching 3D contents.

Symptoms which require discontinuation or refraining from watching 3D contents

- Do not watch 3D contents when you feel fatigue from lack of sleep, overwork or drinking.
- When these symptoms are experienced, stop using/ watching 3D contents and get enough rest until the symptom subsides.
  - Consult your doctor when the symptoms persist. Symptoms may include headache, eyeball pain, dizziness, nausea, palpitation, blurriness, discomfort, double image, visual inconvenience or fatigue.

⚠ CAUTION

Viewing Environment

- Viewing Distance
  - Maintain a distance of at least twice the screen diagonal length when watching 3D contents. If you feel discomfort in viewing 3D contents, move further away from the TV.

Viewing Age

- Infants / Children
  - Usage/ Viewing 3D contents for children under the age of 5 are prohibited.
  - Children under the age of 10 may overreact and become overly excited because their vision is in development (for example: trying to touch the screen or trying to jump into it. Special monitoring and extra attention is required for children watching 3D contents.
  - Children have greater binocular disparity of 3D presentations than adults because the distance between the eyes is shorter than one of adults. Therefore they will perceive more stereoscopic depth compared to adults for the same 3D image.
- Teenagers
  - Teenagers under the age of 19 may be stimulated to light coming from 3D videos. Advise them not to watch 3D videos for a long time when they are tired.
- Elderly
  - The elderly may perceive less of a 3D effect than the youth. Do not sit closer to the TV than the recommended distance.

Cautions when using the 3D glasses

- Be sure to use LG 3D glasses. Otherwise, you may not be able to view 3D videos properly.
- Do not use 3D glasses instead of your normal glasses, sunglasses or protective goggles.
- Using modified 3D glasses may cause eye strain or image distortion.
- Do not keep your 3D glasses in extremely high or low temperatures. It will cause deformation.
- The 3D glasses are fragile and are easy to be scratched. Always use a soft, clean piece of cloth when wiping the lenses. Do not scratch the lenses of the 3D glasses with sharp objects or clean/wipe them with chemicals.

LICENSES

Supported licenses may differ by model. For more information about licenses, visit *www.lg.com*.

Manufactured under license from Dolby Laboratories. "Dolby" and the double-D symbol are trademarks of Dolby Laboratories.

The terms HDMI and HDMI High-Definition Multimedia Interface, and the HDMI logo are trademarks or registered trademarks of HDMI Licensing LLC in the United States and other countries.

ABOUT DIVX VIDEO: DivX® is a digital video format created by DivX, LLC, a subsidiary of Rovi Corporation. This is an official DivX Certified® device that plays DivX video. Visit divx.com for more information and software tools to convert your files into DivX video.

ABOUT DIVX VIDEO-ON-DEMAND: This DivX Certified® device must be registered in order to play purchased DivX Video-on-Demand (VOD) movies. To obtain your registration code, locate the DivX VOD section in your device setup menu. Go to vod.divx.com for more information on how to complete your registration.

"DivX Certified® to play DivX® video up to HD 1080p, including premium content."

"DivX®, DivX Certified® and associated logos are trademarks of Rovi Corporation or its subsidiaries and are used under license."

"Covered by one or more of the following U.S. patents:
7,295,673; 7,460,668; 7,515,710; 7,519,274"

Manufactured under license under U.S. Patent Nos: 5,956,674; 5,974,380; 6,487,535 & other U.S. and worldwide patents issued & pending. DTS, the Symbol & DTS and the Symbol together are registered trademarks & DTS 2.0+Digital Out is a trademark of DTS, Inc. Product includes software. © DTS, Inc. All Rights Reserved.

ENGLISH

OPEN SOURCE SOFTWARE NOTICE

To obtain the source code under GPL, LGPL, MPL and other open source licenses, that is contained in this product, please visit *http://opensource.lge.com*.

In addition to the source code, all referred license terms, warranty disclaimers and copyright notices are available for download.

LG Electronics will also provide open source code to you on CD-ROM for a charge covering the cost of performing such distribution (such as the cost of media, shipping and handling) upon email request to *opensource@lge.com*. This offer is valid for three (3) years from the date on which you purchased the product.

TABLE OF CONTENTS

2 IMPORTANT SAFETY INSTRUCTIONS

6 Viewing 3D Imaging

7 LICENSES

7 OPEN SOURCE SOFTWARE NOTICE

8 TABLE OF CONTENTS

9 INSTALLATION PROCEDURE

9 ASSEMBLING AND PREPARING

9 Unpacking
11 Optional Extras
12 Parts and Buttons
13 Using the Smart Touch Button
14 Lifting and Moving the TV
14 Setting up the TV
14 - Tidying cables
15 Using Video Call Camera
16 - Preparing Video Call Camera

17 MAKING CONNECTIONS

17 Connecting to an Antenna or Cable
18 Connecting to a HD receiver, DVD Player, or VCR
18 - HDMI Connection
19 - DVI to HDMI Connection
20 - Connecting to a Mobile Phone
21 - Component Connection
22 - Composite Connection
23 Connecting a PC
23 - HDMI Connection or DVI to HDMI Connection
25 Connecting to an Audio System
25 - Digital Optical Audio Connection
26 Connecting Headphones
26 Canvas Speaker Connection
27 Connecting a USB Device

28 MAGIC REMOTE CONTROL FUNCTIONS

29 Registering Magic Remote Control
29 How to use Magic Remote Control
29 Precautions to Take when Using the Magic Remote Control

30 WATCHING TV

30 Turning the TV on for the First Time

31 USING THE USER GUIDE

32 SPECIFICATIONS

37 MAINTENANCE

37 Cleaning Your TV
37 - Screen, Frame, Cabinet, and Stand
37 - Power Cord

37 EXTERNAL CONTROL DEVICE SETUP

38 TROUBLESHOOTING

ENGLISH

NOTE

- Image shown may differ from your TV.
- Your TV's OSD (On Screen Display) may differ slightly from that shown in this manual.
- The available menus and options may differ from the input source or product model that you are using.
- New features may be added to this TV in the future.

INSTALLATION PROCEDURE

1 Open the package and make sure all the accessories are included.

2 Connect an external device to the TV set.

3 Make sure the network connection is available.
You can use the TV network functions only when the network connection is made.

ASSEMBLING AND PREPARING

Unpacking

Check your product box for the following items. If there are any missing accessories, contact the local dealer where you purchased your product. The illustrations in this manual may differ from the actual product and item.

CAUTION

- Do not use any unapproved items to ensure the safety and product life span.
- Any damages or injuries by using unapproved items are not covered by the warranty.
- In case of some model, the thin film on screen is a part of TV, So don't take it off.

NOTE

- The items supplied with your product may vary depending upon the model.
- Product specifications or contents of this manual may be changed without prior notice due to upgrade of product functions.
- For an optimal connection, HDMI cables and USB devices should have bezels less than 10 mm thick and 18 mm width.
- Use an extension cable that supports USB 2.0 if the USB cable or USB FLASH DRIVE does not fit into your TV's USB port.

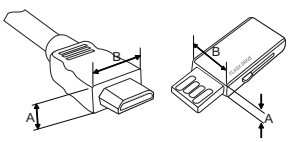

*A ≦ 10 mm
*B ≦ 18 mm

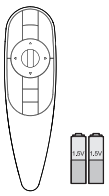

Magic Remote Control, Batteries (AA)
(See p. 28)

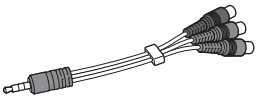

Component Video Cable
(See p. 21)

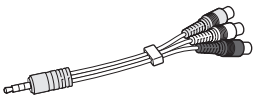

Composite Video Cable
(See p. 21, 22)

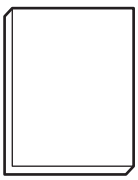

Owner's Manual

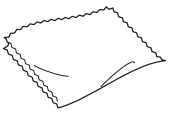

Polishing cloth
Use this to remove dust from the cabinet.

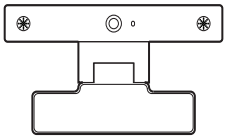

Video call camera
(See p. 15)



Cinema 3D Glasses
The number of 3D glasses may differ depending upon the model or country.



Tag on

ENGLISH

Optional Extras

Optional extras can be changed or modified for quality improvement without any notification.
Contact your dealer for buying these items.
These devices only work with certain models.
The model name or design may be changed manufacturer's circumstances or policies.

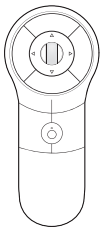

AN-MR400
Magic Remote



AG-F*
Cinema 3D Glasses



AG-F*DP**
Dual Play Glasses

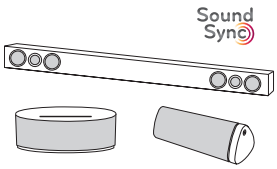

LG Audio Device



Tag On

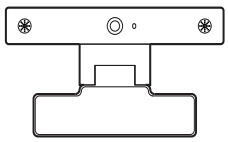

AN-VC5**
Video Call Camera

ENGLISH

Parts and Buttons

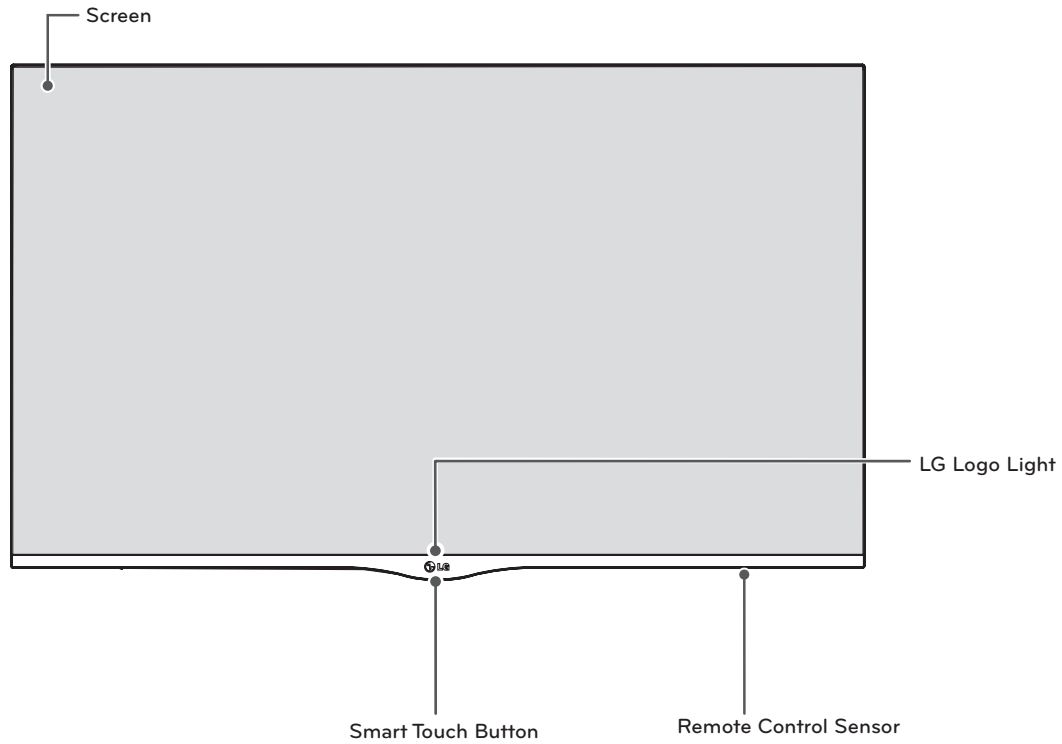

Button	Description
⏻/I	Turns the power on or off.

Using the Smart Touch Button

1 **To Turn the TV On**
- Gently press the smart touch button just below the LG logo light at the bottom of the TV.

2 **To Turn the TV Off**
- If the touch menu is not displayed on the screen, press the smart touch button for about two seconds.

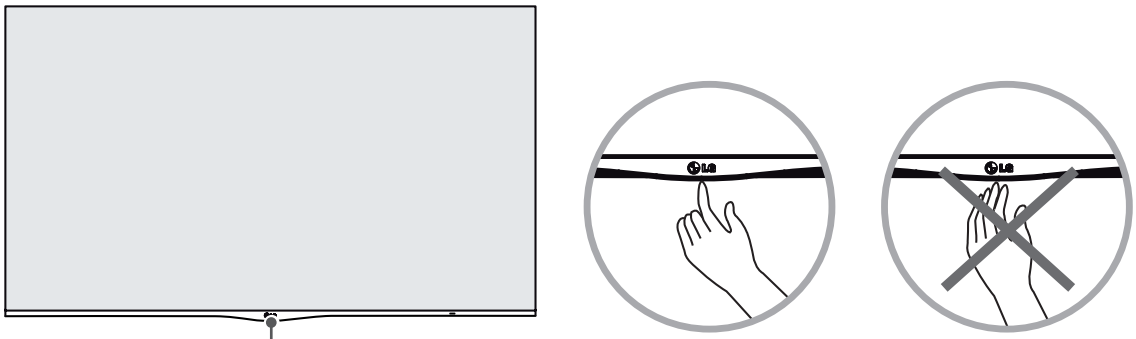

CAUTION
- Do not place the TV near or on sources of heat, as this may result in fire or other damage.
- Press the smart touch button gently with your finger.
- If you touch any other part except the smart touch button, the TV may not respond.
- Do not press the smart touch button with two or more fingers. This may cause the product to malfunction. It is recommended that you only press the button with one finger.

3 **To Use the Smart Touch Button**

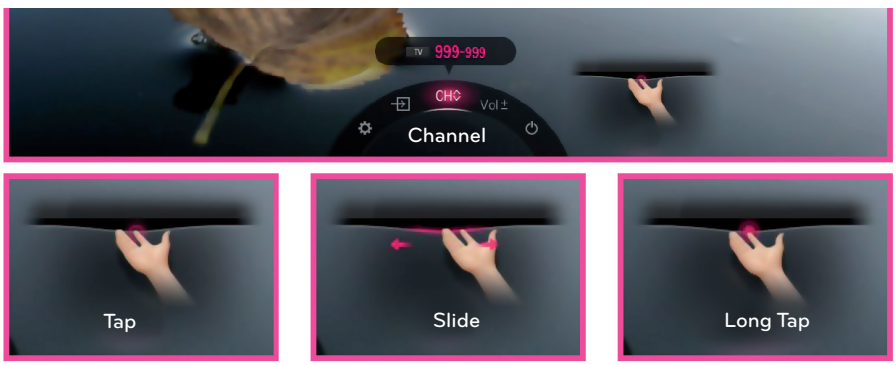

- Touch : Select the menus.
- Touch and Hold : Move to previous or superior step.
- Slide Left / Right: Moves between Channel, Input, Settings, Power Off, and Volume menus.
  If you want to change the channel or volume setting more quickly, slide and hold for 2 seconds.

Lifting and Moving the TV

When moving or lifting the TV, read the following to prevent the TV from being scratched or damaged and for safe transportation regardless of its type and size.

CAUTION

- Avoid touching the screen at all times, as this may result in damage to the screen.
- Do not place the product on the floor with its front facing down. Doing so may result in damage to the screen.

- It is recommended to move the TV in the box or packing material that the TV originally came in.
- Before moving or lifting the TV, disconnect the power cord and all cables.
- When holding the TV, the screen should face away from you to avoid damage.



- When transporting a large TV, there should be at least 2 people.
- When transporting the TV by hand, hold the TV as shown in the following illustration.

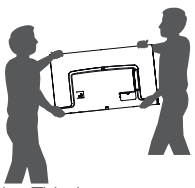

- When transporting the TV, do not expose the TV to jolts or excessive vibration.
- When transporting the TV, keep the TV upright; never turn the TV on its side or tilt towards the left or right.
- Do not apply excessive pressure to cause flexing / bending of frame chassis as it may damage screen.
- Be sure to keep your TV upright instead of laying or tilting it while moving the TV.

Setting up the TV

Tidying cables

- After the wall mount-type product is installed, arrange cables as illustrated below:
  To prevent the power cable from being unplugged, attach the provided power cable holder to the back of the TV.
  Connect the cable as illustrated below.

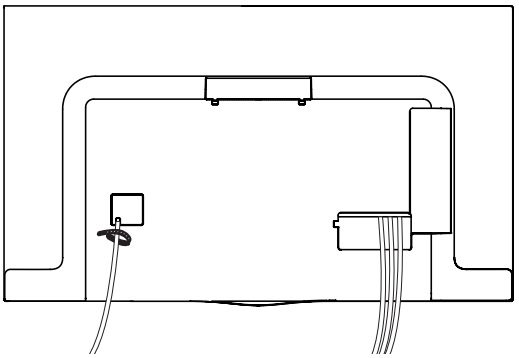

CAUTION

- Do not move the TV by holding cable holder, as the cable holders may break, and injuries and damage to the TV may occur.

ENGLISH

Using Video Call Camera

Front

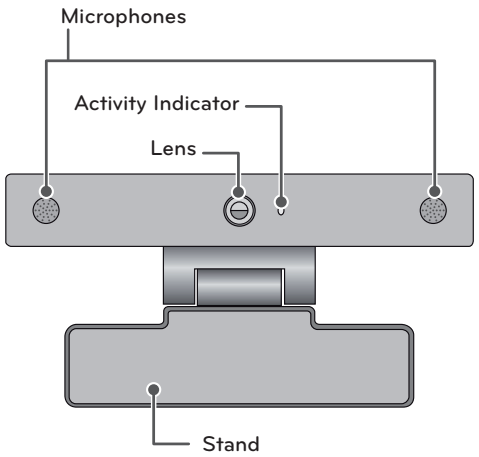

Rear

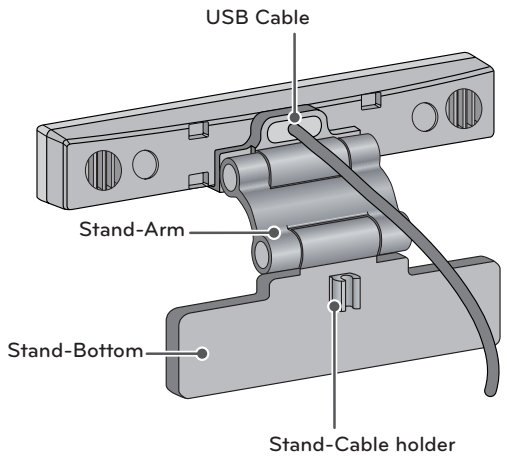

Product Handling

- Do not let the camera get wet. Liquid getting into the camera could cause a short circuit.
- Wipe the camera gently with a dry cloth to remove any dust or dirt. If the product is very dirty, spray a mild detergent on the cloth first.
- Do not clean with thinner, alcohol, benzene, or any other volatile agent. These may damage the product's surface or affect its operation.
- Do not disassemble, repair or alter the product. Incorrect disassembly may cause a fire, electric shock, or injury.
- Do not shake the camera.
- Do not pull on the cable.

Installation Instructions

- Make sure you have enough space for connections when installing the product.
- Do not install in a dusty, dirty, or moist area.
- Do not install in direct sunlight or near a heat source.
- Magnetic objects, such as speakers, may interfere with the camera's operation.
- Install the product in a place with moderate temperature and humidity. The recommended temperature range is 0 °C to 40 °C.
- Strong electromagnetic waves from other devices could interfere with the camera's operation.
- Remove all the protective plastic bags (Vinyl) before use.

The product and company names contained in this manual may or may not be registered trademarks or copyrights, and are only used for identification or explanatory purposes. All trademarks reserved.

ENGLISH

No emergency calls with Skype
Skype is not a telephone replacement service and cannot be used for emergency service dialing.

Preparing Video Call Camera

1 Unfold the stand and put it on the top center of the TV set.

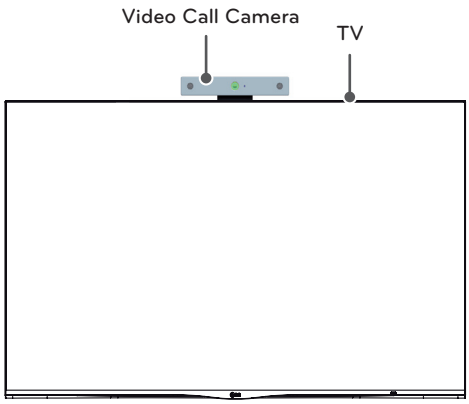

2 Bend the stand of the video call camera.

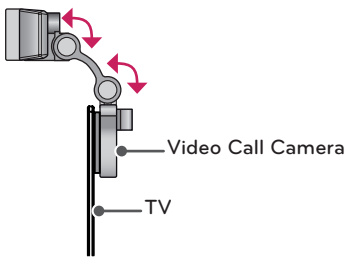

3 Firmly attach the TV stand to the back of the TV set using the velcro tape.

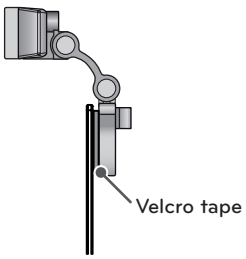

4 Insert the video call camera's cable into the Stand-Cable holder. The camera should be connected to the CAM terminal as shown in the figure.

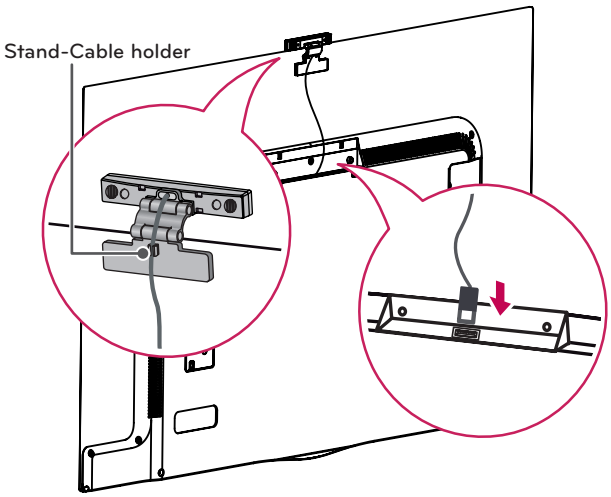

NOTE

- For the best quality video and audio outputs, install the camera on the top-center of your TV.
- Set up with the television switched off.
- When using external speakers, allow sufficient space between the microphones and the speakers.
- The TV must be connected to a network for Skype to work.
- For best results when using a external speakers on your TV, only use the front right/left (stereo) speakers when using Skype.
- When making a video call with Skype using a PC, the Skype software version for Windows should be 4.2 or newer. (Visit the Skype homepage (*www.skype.com*) for operating systems other than Windows, e.g. OS X, Linux, etc.)
- Video calls can not be made to a Mac that runs Skype 2.8 or lower.
- Content can be changed or deleted depending upon Content Provider.
- Please visit the content providers web site for specific information on their services.
- The software update screen will automatically appear when an update is available.
- For some models, you cannot use input devices such as a keyboard and mouse while using Skype (premium content).
- Make sure to connect the video call camera cable to the CAM port with the USB trident logo on the cable facing the front.

ENGLISH

MAKING CONNECTIONS

You can connect various external devices to the TV. Supported external devices are: HD receivers, DVD players, VCRs, audio systems, USB storage devices, PC, gaming devices, and other external devices. For more information on external device's connection, refer to the manual provided with each device.

NOTE

- If you record a TV program on a DVD recorder or VCR, make sure to connect the TV signal input cable to the TV through a DVD recorder or VCR. For more information of recording, refer to the manual provided with the connected device.
- The external device connections shown may differ slightly from illustrations in this manual.
- Connect external devices to the TV regardless of the order of the TV port.
- If you connect a gaming device to the TV, use the cable supplied with the gaming device.
- Refer to the external equipment's manual for operating instructions.

Connecting to an Antenna or Cable

Connect an antenna, cable, or cable box to watch TV while referring to the following. The illustrations may differ from the actual items and a RF cable is optional.

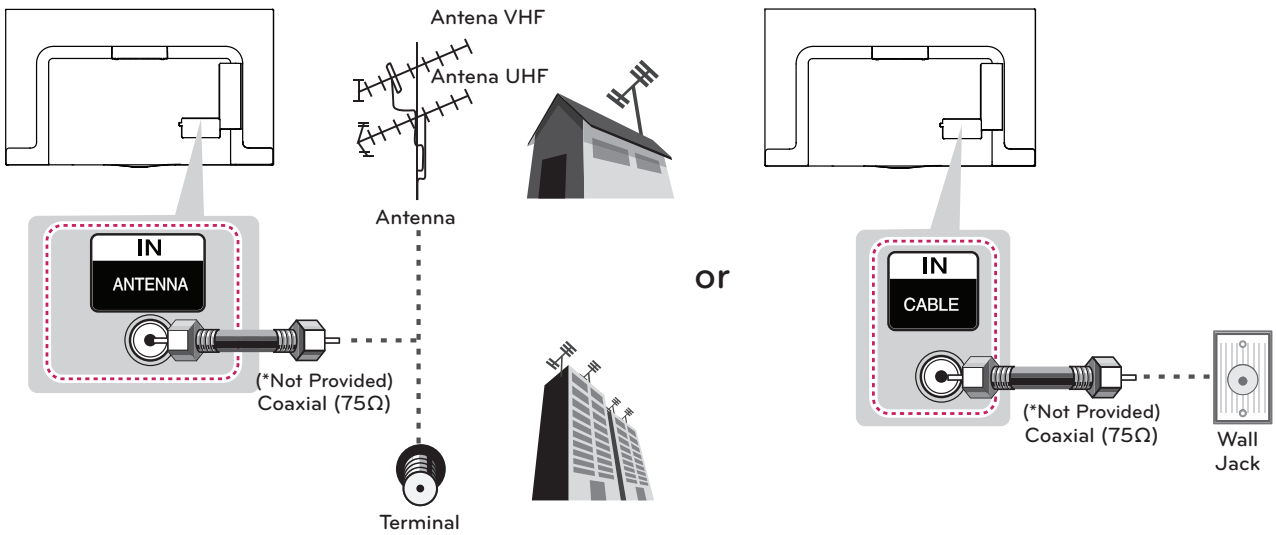

CAUTION

- Make sure not to bend the copper wire of the RF cable.

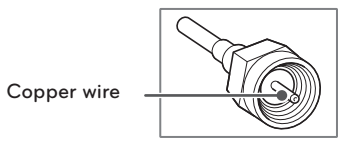

- Complete all connections between devices, and then connect the power cord to the power outlet to prevent damage to your TV.

NOTE

- To improve the picture quality in a poor signal area, please purchase a signal amplifier and install properly.
- Use a signal splitter to use more than 2 TVs.
- If the antenna is not installed properly, contact your dealer for assistance.
- DTV Audio Supported Codec: MPEG, Dolby digital, AAC, HE-AAC.

ENGLISH

Connecting to a HD receiver, DVD Player, or VCR

Connect a HD receiver, DVD Player, or VCR to the TV and select an appropriate input mode.

HDMI Connection

HDMI is the best way to connect a device.

Transmits digital video and audio signals from an external device to the TV. Connect the external device and the TV with the HDMI cable as shown in the following illustration.

NOTE

- Use the latest High Speed HDMI™ Cable that supports CEC (Customer Electronics Control) function.
- High Speed HDMI™ Cables are tested to carry an HD signal up to 1080p and higher.
- HDMI Audio Supported Format: Dolby Digital, PCM (Up to 192 kHz, 32 kHz / 44.1 kHz / 48 kHz / 96 kHz / 192 kHz), DTS

Choose any HDMI input port to connect.
It does not matter which port you use.

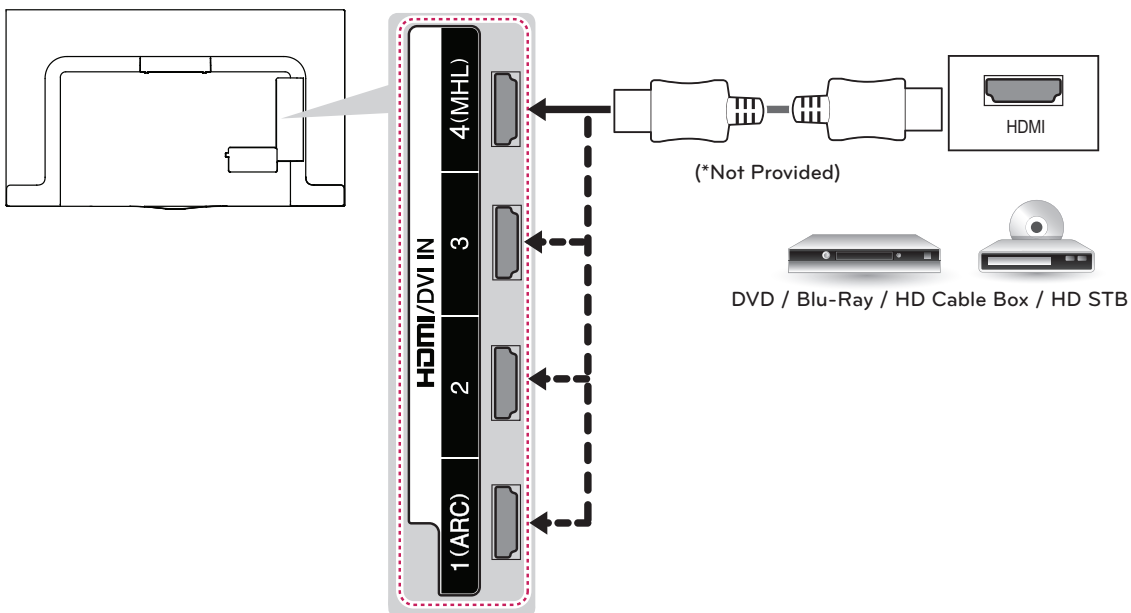

ARC (Audio Return Channel)

- When connected with a high-speed HDMI cable, digital audio can be sent to a compatible device without an additional optical audio cable.
- ARC is only supported on the HDMI / DVI IN 1 (ARC) port. An external audio device that supports ARC should be connected to HDMI / DVI IN 1 if you wish to use ARC.

ENGLISH

DVI to HDMI Connection

Transmits the digital video signal from an external device to the TV. Connect the external device and the TV with the DVI-HDMI cable as shown in the following illustration. To transmit an audio signal, connect an audio cable.

NOTE

- When using the HDMI/DVI cable, Single link is only supported.

Choose any HDMI input port to connect.
It does not matter which port you use.

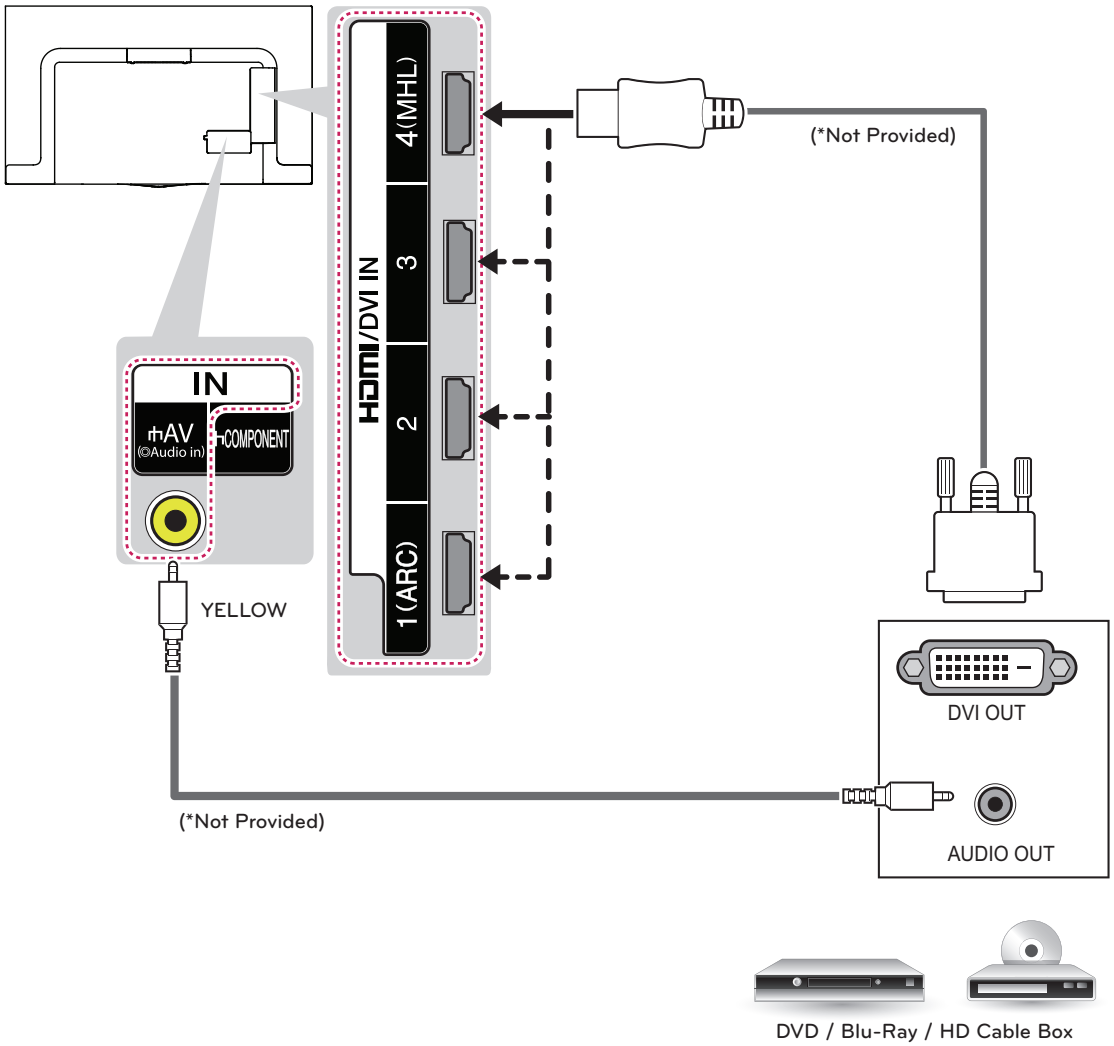

Connecting to a Mobile Phone

Mobile High-definition Link (MHL) is an interface for transmitting digital audio/visual signals from mobile phones to television sets.

NOTE

- Connect the mobile phone to the HDMI / DVI IN 4 (MHL) port to view the phone screen on the TV.
- This only works with an MHL-enabled phone.
- With some MHL supporting mobile phones, you can use the TV remote to control the phone.
- An MHL passive cable is needed to connect the TV and a mobile phone.
- Remove the MHL cable from the TV when:
  - the MHL function is disabled
  - your mobile device is fully charged in standby mode

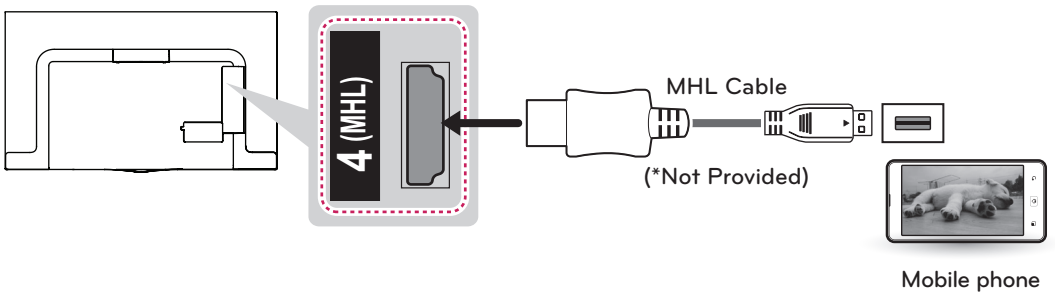

Component Connection

Transmits analog video and audio signals from an external device to the TV. Connect the external device and the TV with a component cable as shown in the following illustration.

NOTE

- If cables are installed incorrectly, it could cause the image to display in black and white or with distorted color.
- **Check to ensure the cables are matched with the corresponding color connection.**

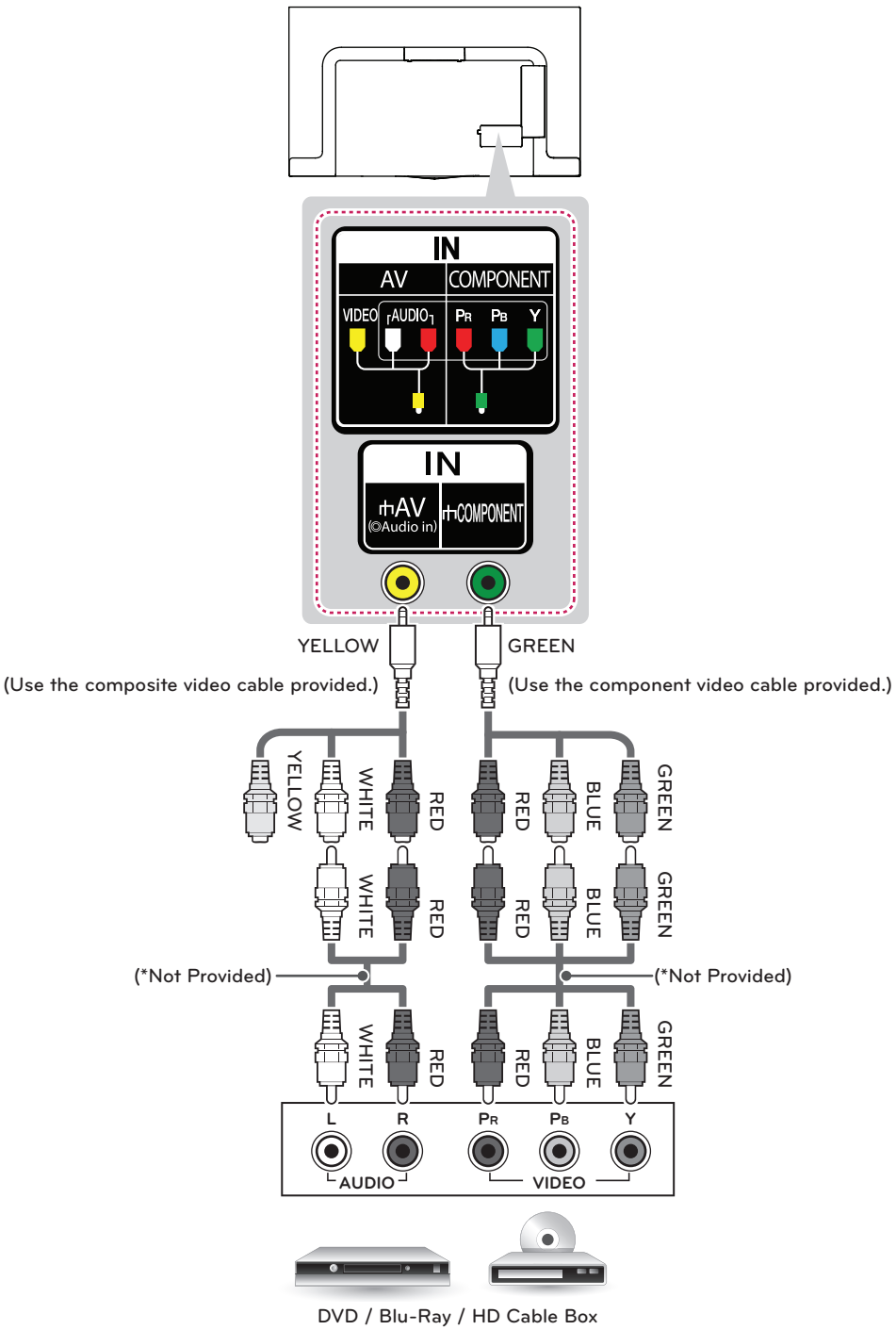

Composite Connection

Transmits analog video and audio signals from an external device to the TV. Connect the external device and the TV with the composite cable as shown in the following illustration.

NOTE

- If you have a mono VCR, connect the audio cable from the VCR to the AUDIO L/MONO jack of the TV.
- **Check to ensure the cables are matched with the corresponding color connection.**

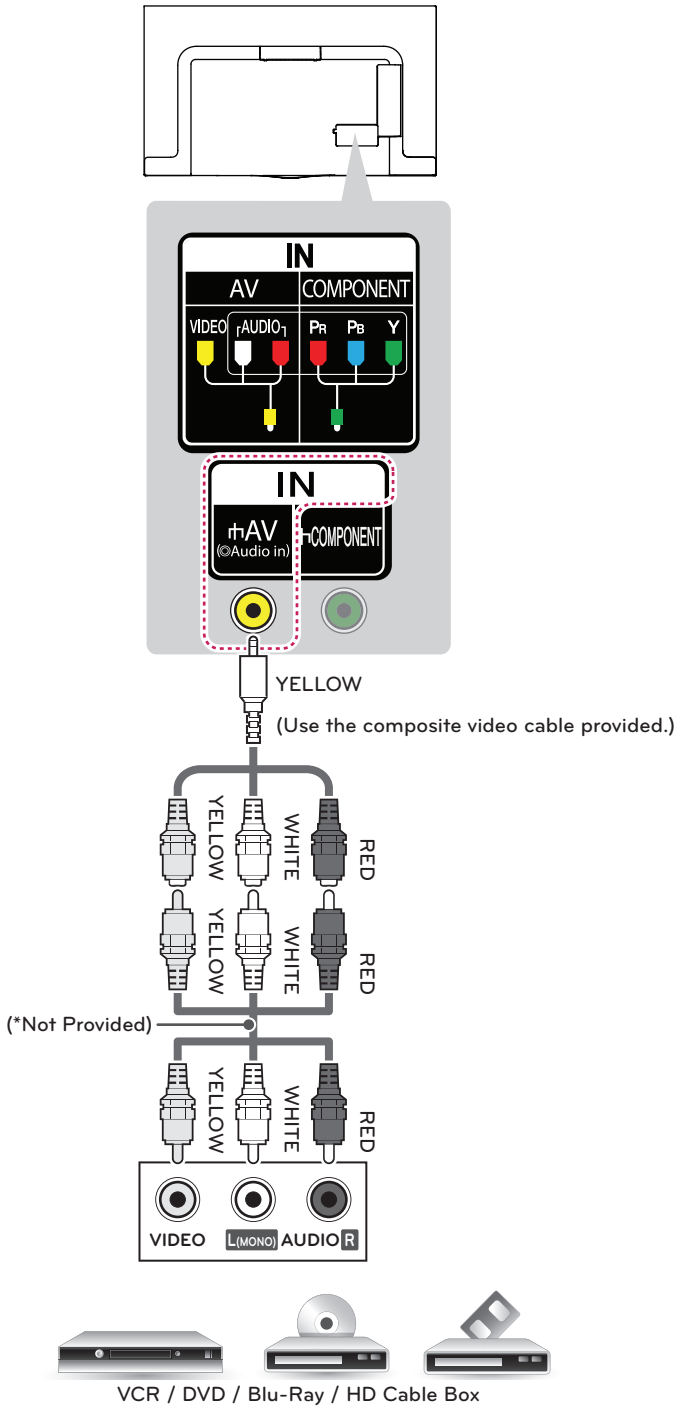

Connecting a PC

NOTE

- It is recommended to use an HDMI connection for the best image quality.
- Depending upon the graphics card, DOS mode video may not work if a HDMI to DVI Cable is in use.
- In PC mode, there may be noise associated with the resolution, vertical pattern, contrast or brightness. If noise is present, change the PC output to another resolution, change the refresh rate to another rate or adjust the brightness and contrast on the PICTURE menu until the picture is clear.
- The synchronization input form for Horizontal and Vertical frequencies is separate.
- Depending upon the graphics card, some resolution settings may not allow the image to be positioned on the screen properly.
- If you are using DVI out from a PC, you have to connect analog audio separately. Refer to the instructions on the next page.
- When using the HDMI/DVI cable, Single link is only supported.

HDMI Connection or DVI to HDMI Connection

Choose method A or B to make connection.

Method A: HDMI Connection

Choose any HDMI input port to connect.
It does not matter which port you use.

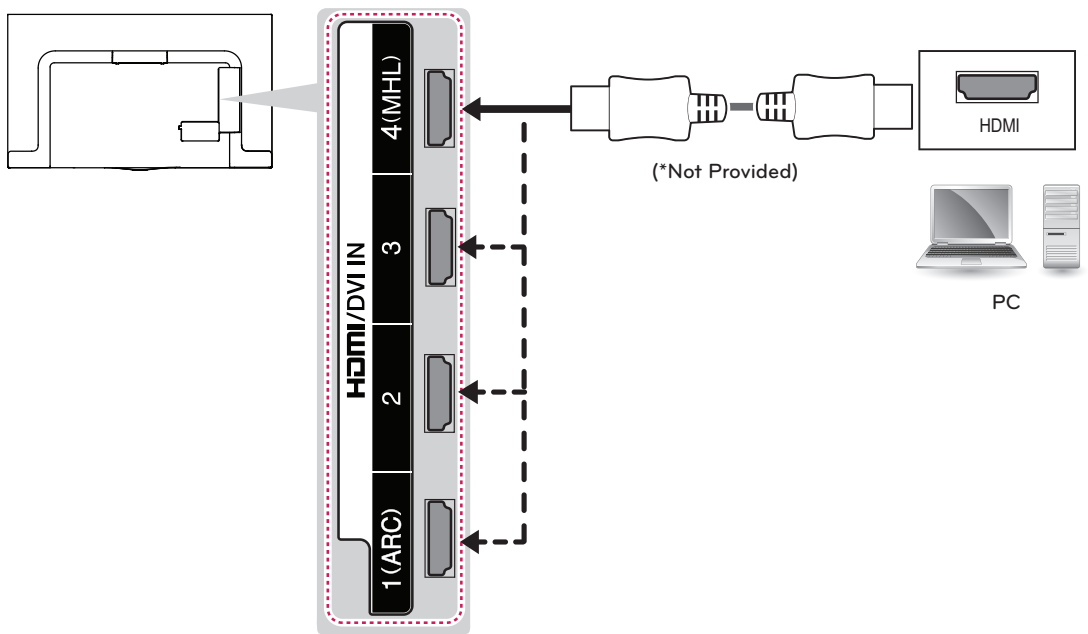

ENGLISH

Method B: DVI to HDMI Connection

Choose any HDMI input port to connect.
It does not matter which port you use.

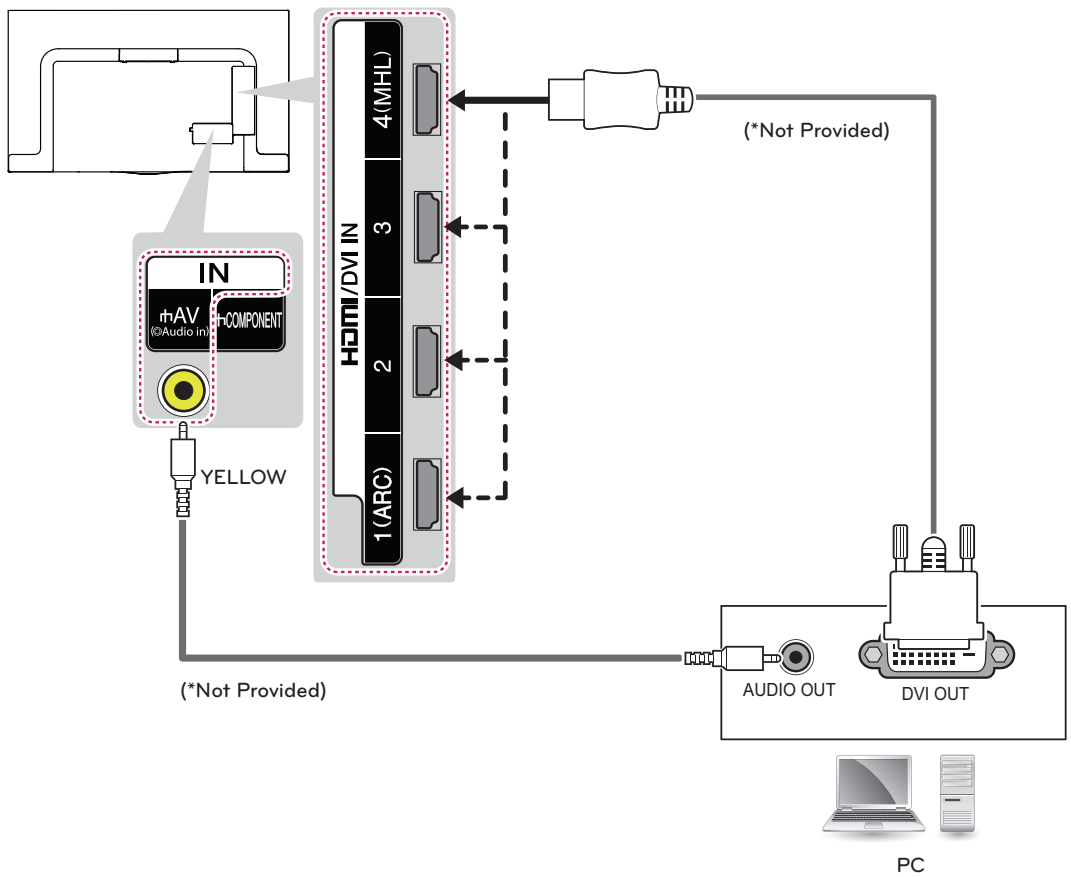

ENGLISH

Connecting to an Audio System

You can use an optional external audio system instead of the built-in speaker.

Digital Optical Audio Connection

Transmits a digital audio signal from the TV to an external device. Connect the external device and the TV with the optical audio cable as shown in the following illustration.

NOTE

- Do not look into the optical output port. Looking at the laser beam may damage your vision.
- Audio with ACP (Audio Copy Protection) function may block digital audio output.

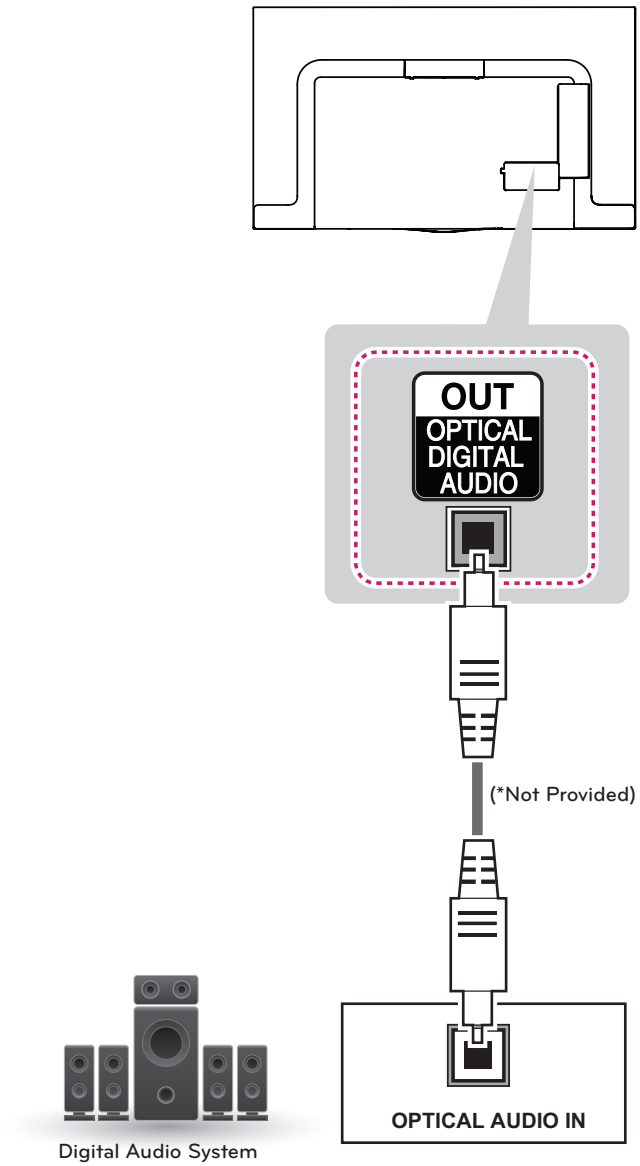

Connecting Headphones

Listening to sound with headphones

NOTE

- AUDIO menu options are disabled when headphones are connected.
- When changing AV MODE with a headphone connected, the change is applied to video but not to audio.
- Optical Digital Audio Out is not available when connecting a headphone.
- Headphone impedance: 16 Ω
- Max audio output: 0.627mW to 1.334mW
- Headphone jack size: 0.35 cm

CAUTION

- Do not use headsets (earphones) at high volume or for a long time. It may cause damage to your hearing.

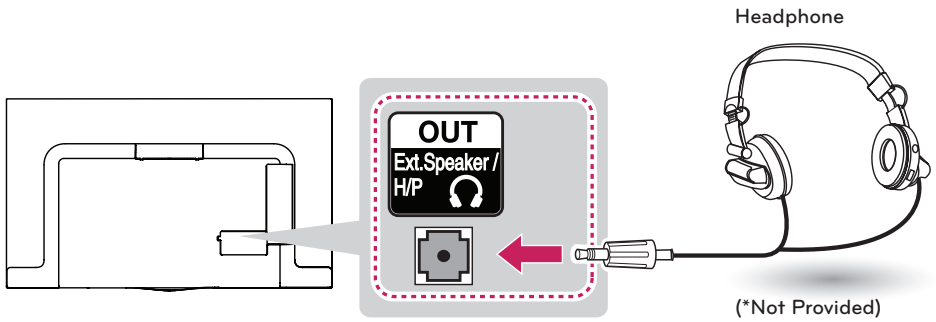

Canvas Speaker Connection

- Connect the Canvas speaker and the TV set with the optical cable as shown.

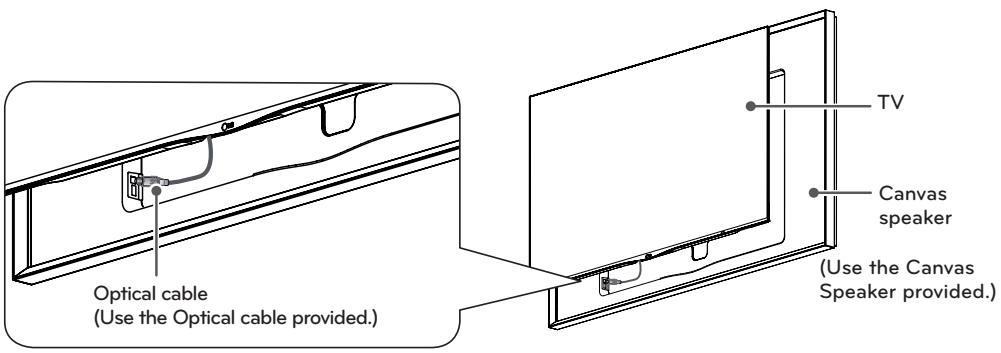

Connecting a USB Device

Connect a USB storage device such as USB flash memory, external hard drive, or a USB memory card reader to the TV and access the Smart Share menu to use various multimedia files.

NOTE

- To use Time Machine function, make sure your USB drive is connected to the USB IN 1 (USB 3.0 IN) Time Machine Ready port.
- Some USB Hubs may not work. If a USB device connected using a USB Hub is not detected, connect it directly to the USB port on the TV.

Choose any USB input port to connect.
It does not matter which port you use.

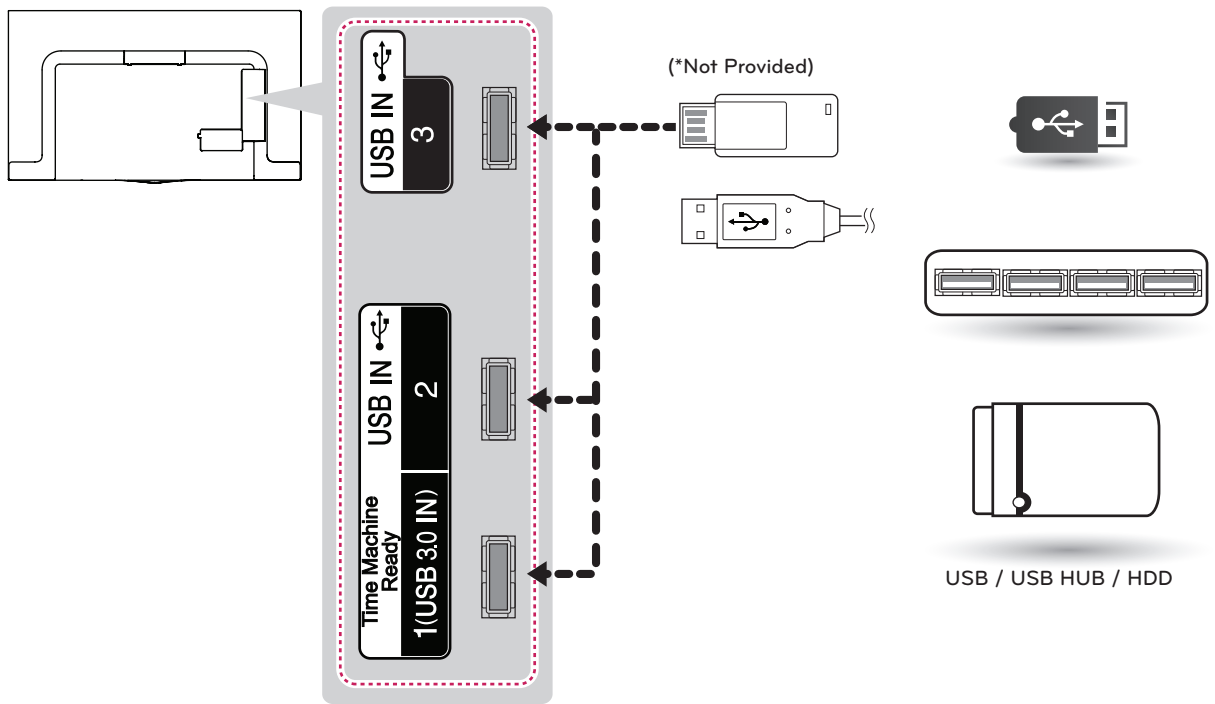

MAGIC REMOTE CONTROL FUNCTIONS

When the message *Magic remote control battery is low. Change the battery.* is displayed, replace the battery. To install batteries, open the battery cover, replace batteries (1.5 V AA) matching ⊕ and ⊖ ends to the label inside the compartment, and close the battery cover. Failure to match the correct polarities of the battery may cause the battery to burst or leak, resulting in fire, personal injury, or ambient pollution. Be sure to point the remote control at the remote control sensor on the TV. To remove the batteries, perform the installation actions in reverse.

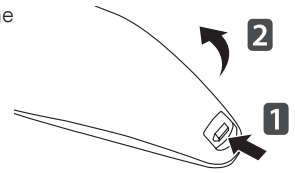

CAUTION

- Do not mix old and new batteries, as this may damage the remote control.

This remote uses infrared light. When in use, it should be pointed in the direction of the TV's remote sensor.

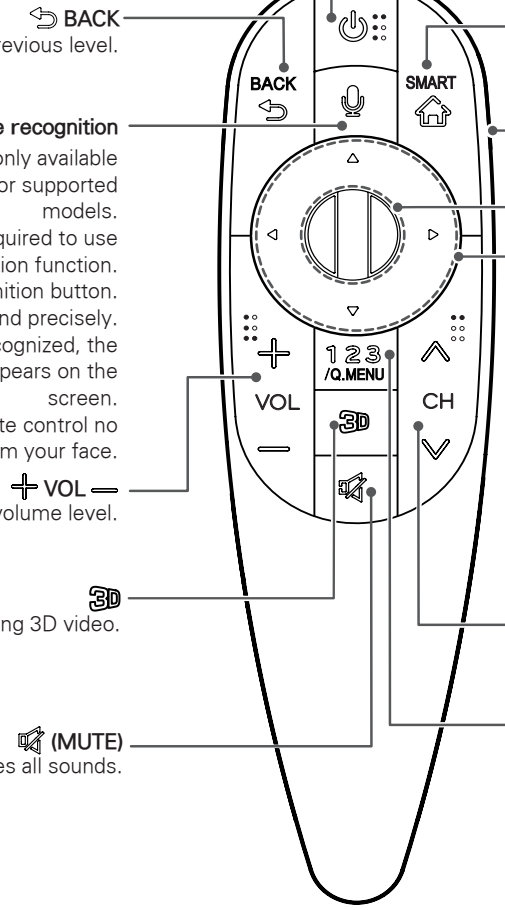

(POWER)
Turns the TV on or off.

BACK
Returns to the previous level.

Voice recognition
-This is a beta version and only available in selected functions for supported models.
-Network connection is required to use the voice recognition function.
1. Press the Voice recognition button.
2. Speak slowly and precisely.
When a voice is recognized, the processing message appears on the screen.
• Use the magic remote control no further than 10 cm from your face.

VOL
Adjusts the volume level.

3D
Used for viewing 3D video.

(MUTE)
Mutes all sounds.

Pointer (RF transmitter)

SMART
Accesses the Smart Home.

LIGHTING ON/OFF
Turns the light on and off.
If you set it to ON, the light automatically turns off in 5 seconds

Wheel (OK)
Selects menus or options and confirms your input.
Scrolls through the saved programmes.
If you press the navigation button while moving the pointer on the screen, the pointer disappears, and the Magic Remote Control works as a regular remote control. To display the pointer again, shake the Magic Remote Control from side to side.

Navigation buttons (up/down/left/right)
Scrolls through menus or options.

CH
Scrolls through the saved channels.

1 2 3 /Q.MENU
Accesses the Universal Control. (Depending upon country)
Accesses the quick menu.

ENGLISH

Registering Magic Remote Control

The Magic Remote Control operates by pairing with your TV. Register the remote as follows.

How to register the Magic Remote Control

(Wheel)	To register automatically, turn the TV on and press the **Wheel (OK)**. When registration is completed, the completion message appears on the screen. If registration fails, turn the TV off and back on, then press the **Wheel (OK)** to complete registration.

How to Re-register the Magic Remote Control

BACK SMART	1 Press and hold the **BACK** and **SMART** buttons together for 5 seconds to reset, then register it by following *How to register the Magic remote control* above. 2 To re-register the Magic remote control, press and hold the **BACK** button for 5 seconds toward the TV.

How to use Magic Remote Control

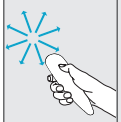

1 You can move the pointer by aiming the Pointer Receiver of the remote control at your TV then move it left, right, up or down.
» If the pointer does not work properly leave the remote control for 10 seconds, then try it again.
2 If the pointer disappears, move the remote control slightly to left or right. Then, it will automatically appear on the screen.
» If the pointer has not been used for a certain period of time, it will disappear.



1	If you press **Wheel (OK)** on the Magic remote control, the screen appears. Shows information about the current program and screen.
2	You can select More Menu.

Precautions to Take when Using the Magic Remote Control

- Use the Magic remote control within the maximum communication distance (10 m). Using the remote control beyond this distance, or with an object obstructing it, may cause a communication failure.
- A communication failure may occur due to nearby devices. Electrical devices such as a microwave oven or wireless LAN product may cause interference, as these use the same bandwidth (2.4 GHz) as the Magic remote control.
- The Magic remote control may be damaged or may malfunction if it is dropped or receives a heavy impact.
- Take care not to bump into nearby furniture or other people when using the Magic remote control.
- Manufacturer and installer cannot provide service related to human safety as the applicable wireless device has possibility of electric wave interference.
- It is recommended that an Access Point (AP) be located more than 1 m away from the TV. If the AP is installed closer than 1 m, the Magic remote control may not perform as expected due to frequency interference.

ENGLISH

WATCHING TV

Turning the TV on for the First Time

When you turn the TV on for the first time, the Initial setting screen appears. Select a language and customize the basic settings.

1 Connect the power cord to a power outlet.

2 In Standby mode, press the power button on the remote control to turn the TV on.
The Initial setting screen appears if you turn the TV on for the first time.

NOTE

- You can also access **Initial Setting** by accessing **OPTION** in the main menu.

3 Follow the on-screen instructions to customize your TV settings according to your preferences.

Language Selection	Selects a language to display.
⇩	
Environment Selection	Select **Home** for the home environment.
⇩	
Time Zone Setting	Selects the time zone and daylight saving. (Depending upon country)
⇩	
Network Connection	Sets your network to enable network-related features on the TV.
⇩	
Select TV Watching Type	Set the TV and set-top box for each watching type. (Depending upon country)
⇩	
Auto Tuning	Scans and saves available channels automatically.
⇩	
Setting is complete	Confirms the setting options.
⇩	
Experience Magic Remote Control!	Simple guide of Magic Remote Control (Depending upon model)

NOTE

- Select **Home** when prompted. **Store** mode puts the TV in demo mode.
- If you select **Store**, the any customized settings will switch back to the default settings of **Store** in 5 minutes.

4 When the basic settings are complete, press the **Wheel (OK)**.

NOTE

- If you do not complete the Initial setting, it will appear whenever the TV turns on.
- Disconnect the power cord from the power outlet when you do not use the TV for a long period of time.

5 To turn the TV off, press the power button on the remote control.

ENGLISH

USING THE USER GUIDE

User Guide allows you to easily access detailed TV information.

1 Press **SMART** button to access the Smart Home menus.

2 Select **User Guide** and press the **Wheel (OK)** button.

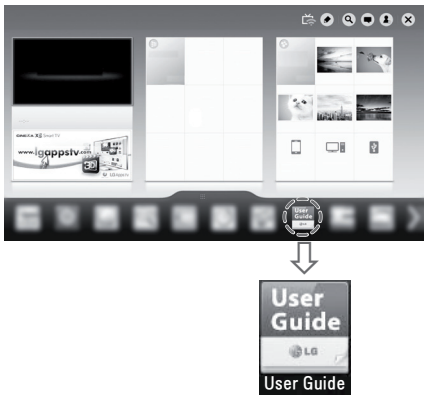



1	Shows the description of the selected menu. You can use ∧ / ∨ to move between pages.
2	Moves to the selected menu directly from the User Guide.

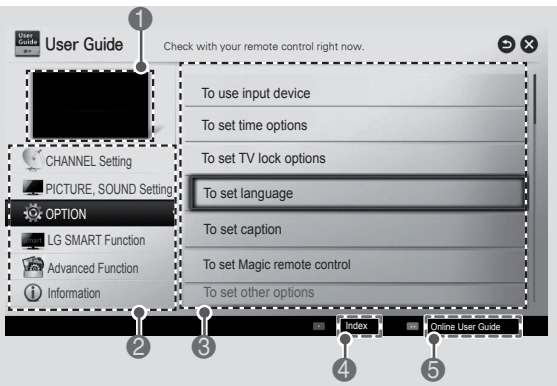

(Depending upon country)

1	Shows the video you were watching.
2	Guide categories.
3	List of topics in the current category. You can use ∧ / ∨ button to move between pages.
4	An index of key words present in the User Guide.
5	Provides the detailed information on the functions of LG Smart TV when the Internet is connected. (It may not be available depending upon the country/ language.)

ENGLISH

SPECIFICATIONS

Product specifications may be changed without prior notice due to upgrade of product functions.

Power requirement		AC 100 - 240 V ~ 50 / 60 Hz
Television System		Analog : NTSC, PAL-M/N DTV : SBTVD
Program Coverage		VHF 2 - 13, UHF 14 - 69, DTV 2 - 69, CATV 1 - 135
External Antenna Impedance		75 Ω
Environment condition	Operating Temperature	0 - 40 °C
	Operating Humidity	Less than 80 %
	Storage Temperature	-20 - 60 °C
	Storage Humidity	Less than 85 %

MODELS	**55EA8800** (55EA8800-SC)
Dimensions (W x H x D)	1230 x 715 x 25.4 (mm)
Weight	12.4 Kg
Current Value / Power consumption	2.65 A / 265 W

Video Camera information

MODELS		AN-VC5** (Video Camera)	
Dimensions (Width x Height x Depth)		112 mm x 56 mm x 38 mm	
Weight		107.8 g	
Video	Lens	Focus	More than 100 cm
		Field of Vision	61.25° in diagonal
	Effective pixels	1920 x 1080	
	Output format	H.264, MJPEG, YUV	
	Output Image	Full-HD, HD, VGA, QVGA, QQVGA	
Audio	Microphone	2 microphones	
Interface		USB	
Environmental conditions	Operating Temperature	0 °C - 40 °C	
	Operating Humidity	0 % - 80 %	
	Storage Temperature	-20 °C - 70 °C	
	Storage Humidity	0 % - 90 %	

- The specifications shown above may be altered without prior notice to improve quality.
- This product follows Skype Encoding Camera Specification (SECS) 2.1.

CAUTION

- Video calls through an LG TV cannot be made using the following devices:
  - » ASUS Skype Video Phone Touch SV1TS
  - » ASUS Skype Videophone Touch SV1TW
  - » AIGURU_SV1 Skype Video Phone

* The list of devices that are not supported may be amended without prior notification.

ENGLISH

HDMI (DTV) supported mode

Resolution	Horizontal Frequency (kHz)	Vertical Frequency (Hz)
640 x 480	31.469 / 31.5	59.94 / 60
720 x 480	31.469 / 31.5	59.94 / 60
720 x 576	31.25 15.625	50 50
1280 x 720	37.500 44.96 / 45	50 59.94 / 60
1920 x 1080	33.72 / 33.75 28.125 26.97 / 27 33.716 / 33.75 56.250 67.43 / 67.5	59.94 / 60 25 / 50.00 23.97 / 24 29.976 / 30.00 50 59.94 / 60

HDMI (PC) supported mode

Resolution	Horizontal Frequency (kHz)	Vertical Frequency (Hz)
640 x 350	31.468	70.09
720 x 400	31.469	70.08
640 x 480	31.469	59.94
800 x 600	37.879	60.31
1024 x 768	48.363	60.00
1152 x 864	54.348	60.053
1280 x 1024	63.981	60.020
1360 x 768	47.712	60.015
1920 x 1080	67.5	60.00

Component port connecting information

Component ports on the TV	Y	PB	PR

Video output ports on DVD player	Y	PB	PR
	Y	B-Y	R-Y
	Y	Cb	Cr
	Y	Pb	Pr

Signal	Component
480i/576i	O
480p/576p	O
720p/1080i	O
1080p	O (50 Hz / 60 Hz only)

Wireless LAN module (WN8122E1) specification

Standard	IEEE802.11a/b/g/n
Frequency Range	2400 to 2483.5 MHz 5150 to 5250 MHz 5725 to 5850 MHz
Output Power (Max.)	802.11a: 16.5 dBm 802.11b: 16 dBm 802.11g: 15.5 dBm 802.11n - 2.4GHz: 15.5 dBm 802.11n - 5GHz: 16.5 dBm

- Because band channel used by the country could be different, the user can not change or adjust the operating frequency and this product is set for the regional frequency table.
- Contains FCC ID: BEJWN8122E1
  Contains IC: 2703H-WN8122E1

Bluetooth module (BM-LDS401) specification

Standard	Bluetooth Version 3.0
Frequency Range	2400 ~ 2483.5 MHz
Output Power (Max.)	10 dBm or lower

- Contains FCC ID: BEJLDS401
  Contains IC: 2703H-LDS401

3D supported mode

- Video, which is input as below media contents is switched into the 3D screen automatically.
- The method for 3D digital broadcast may differ depending upon the signal environment. If video is not switched automatically into 3D, manually convert the settings to view 3D images.

3D supported mode automatically				
Input	Signal	Horizontal Frequency (kHz)	Vertical Frequency (Hz)	Playable 3D video format
HDMI	640 x 480	31.469 / 31.5	59.94 / 60	S/S (Half), T/B, S/S (Full)
		62.938 / 63		F/P, L/A
	480p	31.469 / 31.5		S/S (Half), T/B, S/S (Full)
		62.938 / 63		F/P, L/A
	576p	31.25	50	S/S (Half), T/B, S/S (Full)
		62.5		F/P, L/A
	720p	37.50	50	S/S (Half), T/B, S/S (Full)
		44.96 / 45	59.94 / 60	
		75	50	F/P, L/A
		89.91 / 90	59.94 / 60	
	1080i	28.125	50	S/S (Half), T/B, S/S (Full)
		33.72 / 33.75	59.94 / 60	
		56.25	50	F/P, F/A
		67.432 / 67.50	59.94 / 60	
	1080p	26.97 / 27	23.97 / 24	S/S (Half), T/B, S/S (Full)
		28.125	25	
		33.72 / 33.75	29.976 / 30	
		43.94 / 54	23.97 / 24	F/P, L/A
		56.25	25	
		67.432 / 67.5	29.976 / 30	
		56.25	50	S/S (Half), T/B
		67.432 / 67.5	59.94 / 60	
USB	1080p	33.75	30	S/S (Half), T/B, C/B, MPO(Photo), JPS(Photo)
DLNA	1080p	33.75	30	
	Signal			Playable 3D video format
DTV	Frame Compatible			S/S (Half), T/B

S/S : Side by Side, S/S Full :Side by Side Full, S/S Half :Side by Side Half,
T/B : Top & Bottom, F/P : Frame Packing, F/A : Field Alternative, L/A : Line Alternative, C/B : Checker Board
R/I : Row Interleaving, C/I: Column Interleaving, F/S : Single Frame Sequential

ENGLISH

3D supported mode manually				
Input	Signal			Playable 3D video format
	Resolution	Horizontal Frequency (kHz)	Verticla Frequency (Hz)	
DTV	HD / SD	-	-	2D to 3D, S/S (Half), T/B
ATV(CVBS)	SD	-	-	
Component	HD / SD	-	-	
HDMI-PC	1024 x 768	48.36	60	
	1360 x 768	47.71		
	1920 x 1080	67.5		2D to 3D, S/S (Half), T/B, C/B, F/S, R/I, C/I
	Others	-	-	2D to 3D, S/S (Half), T/B
HDMI-DTV	480P	31.5	60	2D to 3D, S/S(Half), T/B, C/B, F/S, R/I, C/I
	576P	31.25	50	
	720p	37.5	50	
		45	60	
	1080i	28.12	50	2D to 3D, S/S (Half), T/B
		33.75	60	
	1080p	27	24	2D to 3D, S/S (Half), T/B, C/B, R/I, C/I
		28.12	25	
		33.75	30	
		56.25	50	2D to 3D, S/S (Half), T/B, C/B, F/S, R/I, C/I
		67.5	60	
USB ,DLNA (Movie)	Under 704 x 480	-	-	2D to 3D
	Over 704 x 480 interlaced	-	-	2D to 3D, S/S (Half), T/B
	Over 704 x 480 progressive	-	50 / 60	2D to 3D, S/S (Half), T/B,C/B, F/S, R/I, C/I
		-	others	2D to 3D, S/S (Half), T/B, C/B, R/I, C/I
USB, DLNA (Photo)	Under 320 x 240	-	-	2D to 3D
	Over 320 x 240	-	-	2D to 3D, S/S (Half), T/B
Miracast™ / WiDi	1024 x 768p	-	30 / 60	2D to 3D, S/S (Half), T/B
	1280 x 720p	-	30 / 60	
	1920 x 1080p	-	30 / 60	
	Others	-	-	2D to 3D

MAINTENANCE

Cleaning Your TV

Clean your TV regularly to keep it at peak performance and to extend the product lifespan.

⚠ CAUTION

- Before cleaning, turn the power off and disconnect the power cord and all other cables.
- When the TV is left unattended or unused for a long time, disconnect the power cord from the wall outlet to prevent possible damage from lightning or power surges.

Screen, Frame, Cabinet, and Stand

To remove dust or light dirt, wipe the surface with a dry, clean, and soft cloth.
To remove major dirt, wipe the surface with a soft cloth dampened in clean water or a diluted mild detergent. Then wipe immediately with a dry cloth.

⚠ CAUTION

- Do not push, rub, or hit the surface with your fingernail or a sharp object, as this may result in scratches on the screen and image distortions.
- Do not use any chemicals, such as waxes, benzene, alcohol, thinners, insecticides, air fresheners, or lubricants, as these may damage the screen's finish and cause discoloration.
- Do not spray liquid onto the surface. If water enters the TV, it may result in fire, electric shock, or malfunction.

Power Cord

Remove the accumulated dust or dirt on the power cord regularly.

EXTERNAL CONTROL DEVICE SETUP

To obtain the external control device setup information, please visit *www.lg.com*.

TROUBLESHOOTING

Problem	Solution
Cannot control the TV with the remote control.	• Check the remote control sensor on the product and try again. • Check if there is any obstacle between the product and the remote control. • Check if the batteries are still working and properly installed (⊕ to ⊕, ⊖ to ⊖).
No image display and no sound is produced.	• Check if the product is turned on. • Check if the power cord is connected to a wall outlet. • Check if there is a problem in the wall outlet by connecting other products.
The TV turns off suddenly.	• Check the power control settings. The power supply may be interrupted. • Check if the **Off Time/Sleep Timer** is activated in the **TIME** settings. • If there is no signal while the TV is on, the TV will turn off automatically after 15 minutes of inactivity.
If Skype doesn't start	• Check whether the Video Call Camera is properly connected to the USB port on the TV. • Check the network connection status.
If the Notification Window is not displayed when a call is received	• Check that your status is not set as "Do not disturb". • When using certain TV functions, incoming calls can't be received (e.g. during a software update, etc.). • Check 'Privacy Settings' is "Allow calls from people in my contact list only".
If there's echo (e.g. when you hear your own voice played back through the speakers)	• Change the home theater audio setting to stereo rather than surround. • Reduce the speaker volume. • Too much echo in the room can decrease audio quality. • Test microphone using the 'Echo / Sound Test Service'.
If you're not able to receive any video or if it is of low quality	• Internet or network congestion can degrade video quality. • Using wireless can also degrade video quality. We recommend using a wired internet connection. • Screen quality can decrease when using Zoom-In. We recommend you use minimum zoom during video calls. • Check whether the call quality information is marked as "critical". If this is the case, video quality can be degraded.
If the call ends abruptly	• When certain TV functions are activated, the call may be disconnected. (e.g. Sleep timer, etc.) • Do not unplug the Video Call Camera during a call.
If the Skype menu does not appear on the Premium menu	• Connect the camera to your TV, then update the software. For details about how to update the software, refer to your TV manual.
Other issues	• Issues may arise from network congestion of problems with the Skype network. • For further inquiries about Skype functions, visit *www.skype.com*.



The model and serial number of the TV are located on the back and one side of the TV. Record them below should you ever need service.

MODEL _____

SERIAL _____

LG
Life's Good

OWNER'S MANUAL

EXTERNAL CONTROL DEVICE SETUP

Please read this manual carefully before operating the set and retain it for future reference.

www.lg.com

KEY CODES

- This feature is not available for all models.

Code (Hexa)	Function	Note	Code (Hexa)	Function	Note
00	CH +, PR +	R/C Button	45	Q.Menu	R/C Button
01	CH -, PR -	R/C Button	4C	List, - (ATSC Only)	R/C Button
02	Volume +	R/C Button	53	List	R/C Button
03	Volume -	R/C Button	5B	Exit	R/C Button
06	> (Arrow Key / Right Key)	R/C Button	61	Blue	R/C Button
07	< (Arrow Key / Left Key)	R/C Button	63	Yellow	R/C Button
08	Power	R/C Button	71	Green	R/C Button
09	Mute	R/C Button	72	Red	R/C Button
0B	Input	R/C Button	79	Ratio / Aspect Ratio	R/C Button
0E	SLEEP	R/C Button	91	AD (Audio Description)	R/C Button
0F	TV, TV/RAD	R/C Button	7A	User Guide	R/C Button
10 - 19	Number Key 0 - 9	R/C Button	7C	Smart / Home	R/C Button
1A	Q.View / Flashback	R/C Button	7E	SIMPLINK	R/C Button
1E	FAV (Favorite Channel)	R/C Button	8E	►► (Forward)	R/C Button
20	Text (Teletext)	R/C Button	8F	◄◄ (Rewind)	R/C Button
21	T. Opt (Teletext Option)	R/C Button	AA	Info	R/C Button
28	Return (BACK)	R/C Button	AB	Program Guide	R/C Button
30	AV (Audio / Video) Mode	R/C Button	B0	► (Play)	R/C Button
39	Caption/Subtitle	R/C Button	B1	■ (Stop / Live TV)	R/C Button
40	Λ (Arrow Key / Cursor Up)	R/C Button	BA	II (Freeze / Slow Play / Pause)	R/C Button
41	V (Arrow Key / Cursor Down)	R/C Button	BD	● (REC)	R/C Button
42	My Apps	R/C Button	DC	3D	R/C Button
43	Menu / Settings	R/C Button	9F	App / *	R/C Button
44	OK / Enter	R/C Button			

* Key code 4C (0x4C) is available on ATSC/ISDB models which use major/minor channel.
(For South Korea, Japan, North America, Latin America except Colombia models)

EXTERNAL CONTROL DEVICE SETUP

- Image shown may differ from your TV.

Connect the USB to Serial converter/RS-232C input jack to an external control device (such as a computer or an A/V control system) to control the product's functions externally.

Note: The type of control port on the TV can be different between model series.

* Please be advised that not all models support this type of connectivity.

* Cable is not provided.

USB to Serial converter with USB Cable

USB Type

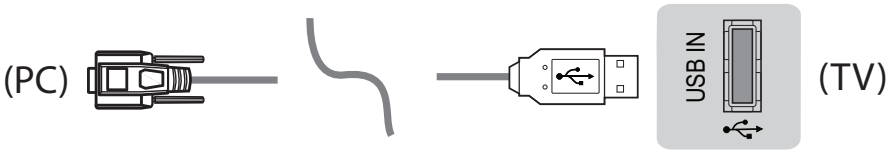

- LGTV supports PL2303 chip-based (Vendor ID : 0x0557, Product ID : 0x2008) USB to serial converter which is not made nor provided by LG.
- It can be purchased from computer stores that carry accessories for IT support professionals.

RS-232C with RS-232C Cable (Legacy)

Phone jack Type

- You need to purchase the phone-jack to RS-232 cable required for the connection between the PC and the TV, which is specified in the manual.

* For other models, connect to the USB port.

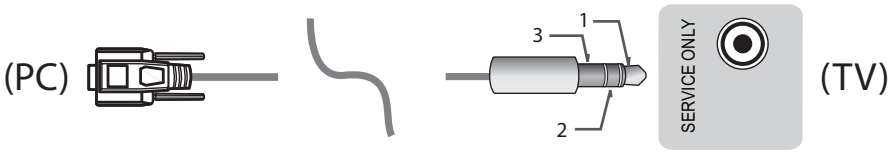

- This connection can only be used for the following models: 55/47/39LN5450-UA, 55/50/47/42LN5400-UA, 42/39/32LN5300-UA, and 37/32LN530B-UA.

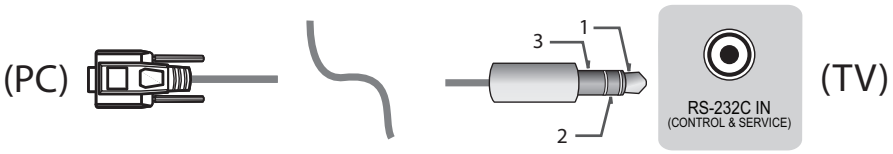

- This connection can only be used for the following models: 42/50PN4500-UA, 50/60PN5300-UF, 50/60PN6500-UA, and 60PN6550-UA.

Customer Computer

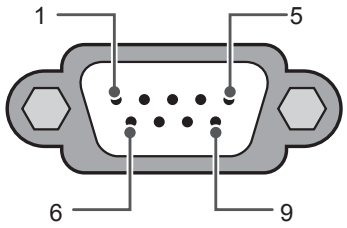

RS-232C
(Serial port)

RS-232C configurations

3-Wire Configurations(Not standard)

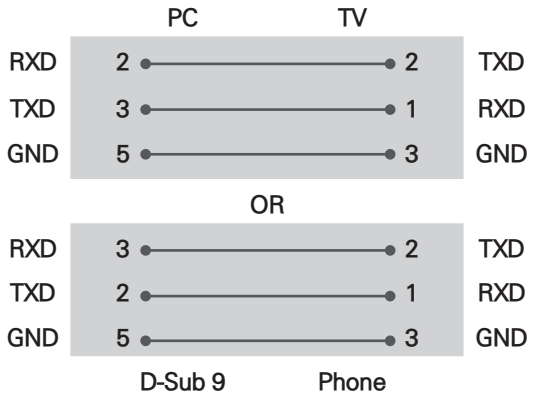

Set ID

For Set ID number, see "**Real Data Mapping**" on p.6

1. Press **SETTINGS** to access the main menus.
2. Press the Navigation buttons to scroll to **OPTION** and press **OK**.
3. Press the Navigation buttons to scroll to **SET ID** and press **OK**.
4. Scroll left or right to select a set ID number and select **CLOSE**. The adjustment range is 1-99.
5. When you are finished, press **EXIT**.

Communication Parameters

- Baud rate : 9600 bps (UART)
- Data length : 8 bits
- Parity : None
- Stop bit : 1 bit
- Communication code : ASCII code
- Use a crossed (reverse) cable.

Command reference list

(Depending on model)

	COMMAND1	COMMAND2	DATA (Hexadecimal)		COMMAND1	COMMAND2	DATA (Hexadecimal)
01. Power off	k	a	00	13. Balance	k	t	00 to 64
02. Aspect Ratio	k	c	(p.7)	14. Color (Colour) Temperature	x	u	00 to 64
03. Screen Mute	k	d	(p.7)	15. ISM Method (Only Plasma TV)	j	p	(p.8)
04. Volume Mute	k	e	00 to 01	16. Energy Saving	j	q	00 to 05
05. Volume Control	k	f	00 to 64	17. Tune Command	m	a	(p.8)
06. Contrast	k	g	00 to 64	18. Channel (Programme) Add/Del(Skip)	m	b	00 to 01
07. Brightness	k	h	00 to 64	19. Key	m	c	Key Codes
08. Color/ Colour	k	i	00 to 64	20. Control Back Light, Control Panel Light	m	g	00 to 64
09. Tint	k	j	00 to 64	21. Input select (Main)	x	b	(p.10)
10. Sharpness	k	k	00 to 32	22. 3D (Only 3D models)	x	t	(p.11)
11. OSD Select	k	l	00 to 01	23. Extended 3D (Only 3D models)	x	v	(p.11)
12. Remote Control Lock Mode	k	m	00 to 01				

* Note: During USB operations such as DivX or EMF, all commands except Power(ka) and Key(mc) are not executed and treated as NG.

Transmission / Receiving Protocol

Transmission

[Command1][Command2][ ][Set ID][ ][Data][Cr]

[Command 1] : First command to control the TV. (j, k, m or x)
[Command 2] : Second command to control the TV.
[Set ID] : You can adjust the [Set ID] to choose desired monitor ID number in option menu. Adjustment range in TV is 1 to 99. If [Set ID] value is selected to '0', every connected set can be controlled.
* [Set ID] is indicated as decimal (1 to 99) on menu and as Hexadecimal (0x00 to 0x63) on transmission/receiving protocol.
[DATA] : To transmit command data (hexadecimal). Transmit 'FF' data to read status of command.
[Cr] : Carriage Return - ASCII code '0x0D'
[ ] : Space – ASCII code '0x20'

OK Acknowledgement

[Command2][ ][Set ID][ ][OK][Data][x]

* The set transmits ACK (acknowledgement) based on this format when receiving normal data. At this time, if the data is data read mode, it indicates present status data. If the data is data write mode, it returns the data of the PC computer.

Error Acknowledgement

[Command2][ ][Set ID][ ][NG][Data][x]

* The set transmits ACK (acknowledgement) based on this format when receiving abnormal data from non-viable functions or communication errors.

Data 00: Illegal Code

Real data mapping (Hexadecimal → Decimal)

* When you enter the [data] in hexadecimal, refer to following conversion table.
* Channel Tune (ma) Command uses two-byte hexadecimal value([data]) to select channel number.

00 : Step 0	32 : Step 50 (Set ID 50)	FE : Step 254
01 : Step 1 (Set ID 1)	33 : Step 51 (Set ID 51)	FF : Step 255
...	...	...
0A : Step 10 (Set ID 10)	63 : Step 99 (Set ID 99)	01 00 : Step 256
...	...	...
0F : Step 15 (Set ID 15)	C7 : Step 199	27 0E : Step 9998
10 : Step 16 (Set ID 16)	C8 : Step 200	27 0F : Step 9999
...	...	...

* Commands may work differently depending on model and signal.

01. Power (Command: k a)

► To control Power Off of the set.

Transmission[k][a][ ][Set ID][ ][Data][Cr]

Data 00 : Power Off

Ack [a][ ][Set ID][ ][OK/NG][Data][x]

► To Show Power On. (Works TV is On Only)

Transmission [k][a][ ][Set ID][ ][FF][Cr]

Ack [a][ ][Set ID][ ][OK][01][x]

* Similarly, if other functions transmit 'FF' data based on this format, Acknowledgement feedback presents status about each function.

02. Aspect Ratio (Command: k c)
(Main Picture Size)

► To adjust the screen format. (Main picture format)
You can also adjust the screen format using the Aspect Ratio in the Q.MENU. or PICTURE menu.

Transmission [k][c][ ][Set ID][ ][Data][Cr]

Data 01 : Normal screen (4:3)
02 : Wide screen (16:9)
04 : Zoom
05 : Zoom 2 (Latin America except Colombia Only)
06 : Set by Program/ Original
07 : 14:9 (Europe, Colombia, Mid-East, Asia except South Korea and Japan)
09 : * Just Scan
0B : Full Wide (Europe, Colombia, Mid-East, Asia except South Korea and Japan)
10 to 1F : Cinema Zoom 1 to 16

Ack [c][ ][Set ID][ ][OK/NG][Data][x]

* Using the PC input, you select either 16:9 or 4:3 screen aspect ratio.
* In DTV/HDMI/Component mode (high-definition), Just Scan is available.
* Full wide mode may work differently based on model and is supported for DTV fully, and ATV, AV partially.

03. Screen Mute (Command: k d)

► To select screen mute on/off.

Transmission [k][d][ ][Set ID][ ][Data][Cr]

Data 00 : Screen mute off (Picture on) Video mute off
01 : Screen mute on (Picture off)
10 : Video mute on

Ack [d][ ][Set ID][ ][OK/NG][Data][x]

* In case of video mute on only, TV will display On Screen Display(OSD). But, in case of Screen mute on, TV will not display OSD.

04. Volume Mute (Command: k e)

► To control volume mute on/off.
You can also adjust mute using the MUTE button on remote control.

Transmission [k][e][ ][Set ID][ ][Data][Cr]

Data 00 : Volume mute on (Volume off)
01 : Volume mute off (Volume on)

Ack [e][ ][Set ID][ ][OK/NG][Data][x]

05. Volume Control (Command: k f)

► To adjust volume.
You can also adjust volume with the volume buttons on remote control.

Transmission [k][f][ ][Set ID][ ][Data][Cr]

Data Min : 00 to Max : 64

Ack [f][ ][Set ID][ ][OK/NG][Data][x]

06. Contrast (Command: k g)

► To adjust screen contrast.
You can also adjust contrast in the PICTURE menu.

Transmission [k][g][ ][Set ID][ ][Data][Cr]

Data Min : 00 to Max : 64

Ack [g][ ][Set ID][ ][OK/NG][Data][x]

07. Brightness (Command: k h)

► To adjust screen brightness.
You can also adjust brightness in the PICTURE menu.

Transmission [k][h][ ][Set ID][ ][Data][Cr]

Data Min : 00 to Max : 64

Ack [h][ ][Set ID][ ][OK/NG][Data][x]

08. Color/Colour (Command: k i)

► To adjust the screen Color(Colour).
You can also adjust colour in the PICTURE menu.

Transmission [k][i][ ][Set ID][ ][Data][Cr]

Data Min : 00 to Max : 64

Ack [i][ ][Set ID][ ][OK/NG][Data][x]

09. Tint (Command: k j)

► To adjust the screen tint.
You can also adjust tint in the PICTURE menu.

Transmission [k][j][ ][Set ID][ ][Data][Cr]

Data Red : 00 to Green : 64

Ack [j][ ][Set ID][ ][OK/NG][Data][x]

10. Sharpness (Command: k k)

► To adjust the screen sharpness.
You can also adjust sharpness in the PICTURE menu.

Transmission [k][k][ ][Set ID][ ][Data][Cr]

Data Min : 00 to Max : 32

Ack [k][ ][Set ID][ ][OK/NG][Data][x]

11. OSD Select (Command: k l)

► To select OSD (On Screen Display) on/off when controlling remotely.

Transmission [k][l][ ][Set ID][ ][Data][Cr]

Data 00 : OSD off 01 : OSD on

Ack [l][ ][Set ID][ ][OK/NG][Data][x]

12. Remote control lock mode (Command: k m)

► To lock the front panel controls on the monitor and remote control.

Transmission [k][m][ ][Set ID][ ][Data][Cr]

Data 00 : Lock off 01 : Lock on

Ack [m][ ][Set ID][ ][OK/NG][Data][x]

* If you are not using the remote control, use this mode.
When main power is off & on (plug-off and plug-in, after 20 - 30 seconds), external control lock is released.
* In the standby mode (DC off by off timer or 'ka', 'mc' command), and if key lock is on, TV will not turn on by power on key of IR & Local Key.

13. Balance (Command: k t)

► To adjust balance.
You can also adjust balance in the AUDIO menu.

Transmission [k][t][ ][Set ID][ ][Data][Cr]

Data Min : 00 to Max : 64

Ack [t][ ][Set ID][ ][OK/NG][Data][x]

14. Color(Colour) Temperature (Command: x u)

► To adjust colour temperature. You can also adjust Color(Colour) Temperature in the PICTURE menu.

Transmission [x][u][ ][Set ID][ ][Data][Cr]

Data Min : 00 to Max : 64

Ack [u][ ][Set ID][ ][OK/NG][Data][x]

15. ISM Method (Command: j p) (Only Plasma TV)

► To control the ISM method. You can also adjust ISM Method in OPTION menu.

Transmission [j][p][ ][Set ID][ ][Data][Cr]

Data Min : 02: Orbiter
08: Normal
20: Color(Colour) Wash

Ack [p][ ][Set ID][ ][OK/NG][Data][x]

16. Energy Saving (Command: j q)

► To reduce the power consumption of the TV. You can also adjust Energy Saving in PICTURE menu.

Transmission [j][q][ ][Set ID][ ][Data][Cr]

Data
00 : Off
01 : Minimum
02 : Medium
03 : Maximum
04 : Auto
05 : Screen off

* (Depending on model)

Ack [q][ ][Set ID][ ][OK/NG][Data][x]

17. Tune Command (Command: m a)

* This command may work differently depending on model and signal.
• For Europe, Mid-East, Colombia, Asia except South Korea and Japan Model

► Select channel to following physical number.

Transmission [m][a][ ][Set ID][ ][Data 00][ ]
[Data 01][ ][Data 02][Cr]

* Analogue Terrestrial/Cable

[Data 00][Data 01] Channel Data
Data 00 : High byte channel data
Data 01 : Low byte channel data
- 00 00 ~ 00 C7 (Decimal : 0 ~ 199)

Data 02 : Input Source (Analogue)
- 00 : Terrestrial TV (ATV)
- 80 : Cable TV (CATV)

* Digital Terrestrial/Cable/Satellite

[Data 00][Data 01]: Channel Data
Data 00 : High Channel data
Data 01 : Low Channel data
- 00 00 ~ 27 0F (Decimal: 0 ~ 9999)

Data 02 : Input Source (Digital)
- 10 : Terrestrial TV (DTV)
- 20 : Terrestrial Radio (Radio)
- 40 : Satellite TV (SDTV)
- 50 : Satellite Radio (S-Radio)
- 90 : Cable TV (CADTV)
- a0 : Cable Radio (CA-Radio)

* Tune Command Examples:
1. Tune to the analogue terrestrial (PAL) Channel 10.
   Set ID = All = 00
   Data 00 & 01 = Channel Data is 10 = 00 0a
   Data 02 = Analogue Terrestrial TV = 00
   Result = **ma 00 00 0a 00**

2. Tune to the digital terrestrial (DVB-T) Channel 01.
   Set ID = All = 00
   Data 00 & 01 = Channel Data is 1 = 00 01
   Data 02 = Digital Terrestrial TV = 10
   Result = **ma 00 00 01 10**

3. Tune to the satellite (DVB-S) Channel 1000.
   Set ID = All = 00
   Data 00 & 01 = Channel Data is 1000 = 03 E8
   Data 02 = Digital Satellite TV = 40
   Result = **ma 00 03 E8 40**

Ack [a][ ][Set ID][ ][OK][Data 00][Data 01]
[Data 02][x][a][ ][Set ID][ ][NG][Data 00][x]

- For South Korea, North/Latin America except Colombia Model

► To tune channel to following physical/major/minor number.

Transmission [m][a][ ][0][ ][Data00][ ][Data01]
[ ][Data02][ ][Data03][ ][Data04][ ][Data05][Cr]

Digital channels have a Physical, Major, and Minor channel number. The Physical number is the actual digital channel number, the Major is the number that the channel should be mapped to, and the Minor is the sub-channel. Since the ATSC tuner automatically maps the channel from the Major / Minor number, the Physical number is not required when sending a command in Digital.

* Analogue Terrestrial/Cable

Data 00 : Physical Channel Number
- Terrestrial (ATV) : 02~45 (Decimal: 2 ~ 69)
- Cable (CATV) : 01, 0E~7D (Decimal : 1, 14~125)

[Data 01 ~ 04]: Major/Minor Channel Number
Data 01 & 02: xx (Don't care)
Data 03 & 04: xx (Don't care)

Data 05: Input Source (Analogue)
- 00 : Terrestrial TV (ATV)
- 01 : Cable TV (CATV)

* Digital Terrestrial/Cable

Data 00 : xx (Don't care)

[Data 01][Data 02]: Major Channel Number
Data 01 : High byte Channel Data
Data 02 : Low byte Channel Data
- 00 01 ~ 27 0F (Decimal: 1 ~ 9999)

[Data 03][Data 04]: Minor Channel Number
Data 03 : High byte Channel Data
Data 04 : Low byte Channel Data

Data 05 : Input Source (Digital)
- 02 : Terrestrial TV (DTV) – Use Physical Channel Number
- 06 : Cable TV (CADTV) – Use Physical Channel Number
- 22 : Terrestrial TV (DTV) – Don't Use Physical Channel Number
- 26 : Cable TV (CADTV) - Don't Use Physical Channel Number
- 46 : Cable TV (CADTV) – Use Major Channel Number Only (One Part Channel)

Two bytes are available for each major and minor channel data, but usually the low byte is used alone (high byte is 0).

* Tune Command Examples:
1. Tune to the analogue cable (NTSC) channel 35.
   Set ID = All = 00
   Data 00 = Channel Data is 35 = 23
   Data 01 & 02 = No Major = 00 00
   Data 03 & 04 = No Minor = 00 00
   Data 05 = Analogue Cable TV = 01
   Total = **ma 00 23 00 00 00 00 01**

2. Tune to the digital terrestrial (ATSC) channel 30-3.
   Set ID = All = 00
   Data 00 = Don't know Physical = 00
   Data 01 & 02 = Major is 30 = 00 1E
   Data 03 & 04 = Minor is 3 = 00 03
   Data 05 = Digital Terrestrial TV = 22
   Total = **ma 00 00 00 1E 00 03 22**

Ack [a][ ][Set ID][ ][OK][Data 00][Data 01]
[Data 02][Data 03][Data 04][Data 05]
[x][a][ ][Set ID][ ][NG][Data 00][x]

- For Japan Model

► To tune channel to following physical/major/minor number.

Transmission [m][a][ ][0][ ][Data00][ ][Data01]
[ ][Data02][ ][Data03][ ][Data04][ ][Data05][Cr]

* Digital Terrestrial/Satellite

Data 00: xx (Don't care)

[Data 01][Data 02]: Major Channel Number
Data 01: High byte Channel Data
Data 02: Low byte Channel Data
- 00 01 ~ 27 0F (Decimal: 1 ~ 9999)

[Data 03][Data 04]: Minor/Branch Channel Number
(Don't care in Satellite)
Data 03: High byte Channel Data
Data 04: Low byte Channel Data

Data 05 : Input Source (Digital/Satellite for Japan)
- 02 : Terrestrial TV (DTV)
- 07 : BS (Broadcasting Satellite)
- 08 : CS1 (Communication Satellite 1)
- 09 : CS2 (Communication Satellite 2)

* Tune Command Examples:
1 Tune to the digital terrestrial (ISDB-T) channel 17-1.
Set ID = All = 00
Data 00 = Don't know Physical = 00
Data 01 & 02 = Major is 17 = 00 11
Data 03 & 04 = Minor/Branch is 1 = 00 01
Data 05 = Digital Terrestrial TV = 02
Total = **ma 00 00 00 11 00 01 02**

2. Tune to the BS (ISDB-BS) channel 30.
Set ID = All = 00
Data 00 = Don't know Physical = 00
Data 01 & 02 = Major is 30 = 00 1E
Data 03 & 04 = Don't Care = 00 00
Data 05 = Digital BS TV = 07
Total = **ma 00 00 00 1E 00 00 07**

* This feature is varied based on the model.

Ack [a][ ][Set ID][ ][OK][Data 00][Data 01]
[Data 02][Data 03][Data 04][Data 05]
[x][a][ ][Set ID][ ][NG][Data 00][x]

18. Channel(Programme) Add/Del(Skip)
(Command: m b)

► To skip current channel(programme) for next time.

Transmission [m][b][ ][Set ID][ ][Data][Cr]

Data 00 : Del(ATSC,ISDB)/Skip(DVB) 01 : Add

Ack [b][ ][Set ID][ ][OK/NG][Data][x]

* Set the saved channel status to del(ATSC, ISDB)/ skip(DVB) or add.

19. Key (Command: m c)

► To send IR remote key code.

Transmission [m][c][ ][Set ID][ ][Data][Cr]

Data Key code - p.2.

Ack [c][ ][Set ID][ ][OK/NG][Data][x]

20. Control Back Light (Command: m g)

• For LCD TV / LED TV

► To control the back light.

Transmission [m][g][ ][Set ID][ ][Data][Cr]

Data Min : 00 to Max : 64

Ack [g][ ][Set ID][ ][OK/NG][Data][x]

Control Panel Light (Command: m g)

• For Plasma TV

► To control the panel light.

Transmission [m][g][ ][Set ID][ ][Data][Cr]

Data Min : 00 to Max : 64

Ack [g][ ][Set ID][ ][OK/NG][Data][x]

21. Input select (Command: x b)
(Main Picture Input)

► To select input source for main picture.

Transmission [x][b][ ][Set ID][ ][Data][Cr]

Data

00 : DTV	01 : CADTV
02 : Satellite DTV ISDB-BS (Japan)	10 : ATV
03 : ISDB-CS1 (Japan)	
04 : ISDB-CS2 (Japan)	
11 : CATV	
20 : AV or AV1	21 : AV2
40 : Component1	41 : Component2
90 : HDMI1	91 : HDMI2
92 : HDMI3	93 : HDMI4

Ack [b][ ][Set ID][ ][OK/NG][Data][x]

* This function depends on model and signal.

22. 3D(Command: x t) (only 3D models)
(Depending on model)

► To change 3D mode for TV.

Transmission [x][t][ ][Set ID][ ][Data 00][ ][Data 01][ ][Data 02][ ][Data 03][Cr]

Data Structure
[Data 00] 00 : 3D On
01 : 3D Off
02 : 3D to 2D
03 : 2D to 3D
[Data 01] 00 : Top and Bottom
01 : Side by Side
02 : Check Board
03 : Frame Sequential
04 : Column interleaving
05 : Row interleaving
[Data 02] 00 : Right to Left
01 : Left to Right
[Data 03] 3D Effect(3D Depth): Min : 00 - Max : 14
(*transmit by Hexadecimal code)

* If [Data 00] is 00 (3D On), [Data 03] has no meaning.
* If [Data 00] is 01 (3D off) or 02 (3D to 2D), [Data 01], [Data 02] and [Data 03] have no meaning.
* If [Data 00] is 03(2D to 3D), [Data 01] and [Data 02] have no meaning.
* If [Data 00] is 00 (3D On) or 03 (2D to 3D), [Data 03] works when 3D Mode (Genre) is manual only.
* All 3D pattern options ([Data 01]) may not be available according to broadcasting/video signal.

[Data 00]	[Data 01]	[Data 02]	[Data 03]
00	O	O	O
01	X	X	X
02	X	X	X
03	X	X	O

X : don't care

Ack [t][ ][Set ID][ ][OK][Data00][Data01][Data02][Data03][x]
[t][ ][Set ID][ ][NG][Data00][x]

23. Extended 3D(Command: x v) (only 3D models)
(Depending on model)

► To change 3D option for TV.

Transmission [x][v][ ][Set ID][ ][Data 00][ ][Data 01][Cr]

[Data 00] 3D option
00 : 3D Picture Correction
01 : 3D Depth (3D Mode is Manual Only)
02 : 3D Viewpoint
06 : 3D Color Correction
07 : 3D Sound Zooming
08 : Normal Image View
09 : 3D Mode (Genre)

[Data 01] It has own range for each 3D option determined by [Data 00].
1) When [Data 00] is 00
00 : Right to Left
01 : Left to Right

2) When [Data 00] is 01, 02
Data Min: 0 - Max: 14 (*transmit by Hexadecimal code)
Data value range(0 - 20) converts Viewpoint range (-10 - +10) automatically (Depending on model)
* This option works when 3D Mode (Genre) is manual only.

3) When [Data 00] is 06, 07
00 : Off
01 : On

4) When [Data 00] is 08
00 : Revert to 3D video from 3D-to-2D converted 3D video
01 : Change 3D video to 2D video, except 2D-to-3D video
* If conversion condition doesn't meet, command is treated as NG.

5) When [Data 00] is 09
00 : Standard 01 : Sport
02 : Cinema 03 : Extreme
04 : Manual

Ack [v][ ][Set ID][ ][OK][Data00][Data01][x]
[v][ ][Set ID][ ][NG][Data00][x]


LG
Life's Good