LG
Life's Good

ENGLISH

OWNER'S MANUAL

DVD Mini Hi-Fi System

Please read this manual carefully before operating your set and retain it for future reference.

DM5540(DM5540, DMS5540F/W)

MFL67989416

Reg. No : I.1.LG1.00602.0214
www.lg.com

Safety Information

CAUTION: TO REDUCE THE RISK OF ELECTRIC SHOCK DO NOT REMOVE COVER (OR BACK) NO USER-SERVICEABLE PARTS INSIDE REFER SERVICING TO QUALIFIED SERVICE PERSONNEL.

This lightning flash with arrowhead symbol within an equilateral triangle is intended to alert the user to the presence of uninsulated dangerous voltage within the product's enclosure that may be of sufficient magnitude to constitute a risk of electric shock to persons.

The exclamation point within an equilateral triangle is intended to alert the user to the presence of important operating and maintenance (servicing) instructions in the literature accompanying the product.

WARNING: TO PREVENT FIRE OR ELECTRIC SHOCK HAZARD, DO NOT EXPOSE THIS PRODUCT TO RAIN OR MOISTURE.

WARNING: Do not install this equipment in a confined space such as a book case or similar unit.

CAUTION: Do not block any ventilation openings. Install in accordance with the manufacturer's instructions.
Slots and openings in the cabinet are provided for ventilation and to ensure reliable operation of the product and to protect it from over heating. The openings shall be never be blocked by placing the product on a bed, sofa, rug or other similar surface. This product shall not be placed in a built-in installation such as a bookcase or rack unless proper ventilation is provided or the manufacturer's instruction has been adhered to.

CAUTION: This product employs a Laser System. To ensure proper use of this product, please read this owner's manual carefully and retain it for future reference. Shall the unit require maintenance, contact an authorized service center.
Use of controls, adjustments or the performance of procedures other than those specified herein may result in hazardous radiation exposure.
To prevent direct exposure to laser beam, do not try to open the enclosure.

CAUTION concerning the Power Cord

Most appliances recommend they be placed upon a dedicated circuit;

That is, a single outlet circuit which powers only that appliance and has no additional outlets or branch circuits. Check the specification page of this owner's manual to be certain. Do not overload wall outlets. Overloaded wall outlets, loose or damaged wall outlets, extension cords, frayed power cords, or damaged or cracked wire insulation are dangerous. Any of these conditions could result in electric shock or fire. Periodically examine the cord of your appliance, and if its appearance indicates damage or deterioration, unplug it, discontinue use of the appliance, and have the cord replaced with an exact replacement part by an authorized service center. Protect the power cord from physical or mechanical abuse, such as being twisted, kinked, pinched, closed in a door, or walked upon. Pay particular attention to plugs, wall outlets, and the point where the cord exits the appliance. To disconnect power from the mains, pull out the mains cord plug. When installing the product, ensure that the plug is easily accessible.

This device is equipped with a portable battery or accumulator.

Safety way to remove the battery or the battery from the equipment: Remove the old battery or battery pack, follow the steps in reverse order than the assembly. To prevent contamination of the environment and bring on possible threat to human and animal health, the old battery or the battery put it in the appropriate container at designated collection points. Do not dispose of batteries or battery together with other waste. It is recommended that you use local, free reimbursement systems batteries and accumulators. The battery shall not be exposed to excessive heat such as sunshine, fire or the like.

CAUTION: The apparatus shall not be exposed to water (dripping or splashing) and no objects filled with liquids, such as vases, shall be placed on the apparatus.

Notes on Copyrights

- This product incorporates copyright protection technology that is protected by U.S. patents and other intellectual property rights. Use of this copyright protection technology must be authorized by Rovi, and is intended for home and other limited viewing uses only unless otherwise authorized by Rovi. Reverse engineering or disassembly is prohibited.
- Under the U.S. Copyright laws and Copyright laws of other countries, unauthorized recording, use, display, distribution, or revision of television programs, videotapes, BD-ROM discs, DVDs, CDs and other materials may subject you to civil and/or criminal liability.

Table of Contents

1 Getting Started

2 Safety Information
6 Unique Features
6 Accessories
7 Introduction
7 – Playable Discs
7 – About the "⊘" Symbol Display
7 – Symbols Used in this Manual
7 – Regional Codes
8 Playable file Requirement
9 – Compatible USB Devices
9 – USB device requirement
10 Front panel
12 Rear panel
13 Remote control

2 Connecting

14 Connecting to speakers
14 – Attaching the speakers to the unit
14 – Attaching the subwoofer to the unit.
15 Positioning the system
16 Connections to Your TV
16 Component Video Connection
17 – Video Connection
18 Optional Equipment Connection
18 – AUX In Connection
18 – AUDIO (PORT. IN) In Connection
19 – USB Connection
19 Antenna Connection

3 System setting

20 Adjust the setup settings
20 – OSD Initial language settings - Optional
20 – To display and exit the Setup menu
21 – Language
21 – Display
23 – Lock (Parental Control)
24 – Others

4 Operating

25 Using the Home Menu
25 Basic Operations
25 – CD / USB
26 Other Operations
26 – Displaying Disc Information on-screen
27 – To display the DVD Menu
27 – To display the DVD title
27 – Starting play from selected time
28 – Marked Playback
29 – AUTO DJ playback
29 – Viewing a PHOTO file
30 – Sleep Timer Setting
30 – Dimmer
30 – Turn off the sound temporarily
32 Radio Operations
32 – Listening to the radio
32 – Presetting the Radio Stations
32 – Deleting all the saved stations
32 – Deleting a saved station
32 – Improving poor FM reception
33 – Setting the Clock
33 – Using your player as an alarm clock
34 Sound adjustment
34 – Setting the surround mode
35 – Adjust the speaker level settings
35 – Setting the USER EQ
35 Advanced Operations
35 – Listening to music from your external device
35 – Recording to USB

5 Troubleshooting

37 Troubleshooting

6 Appendix

38 Maintenance
38 – Handling the Unit
38 – Notes on Discs
39 Area Codes
40 Language Codes
41 Trademarks and Licenses
42 Specifications

Unique Features

Portable In

Listen to music from your portable device. (MP3, Notebook, etc)

USB Direct Recording

Records music from CD to your USB device.

Accessories

Please check and identify the supplied accessories.

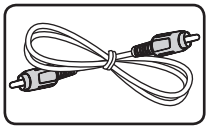

Video cable (1)

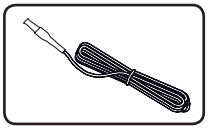

FM antenna (1)

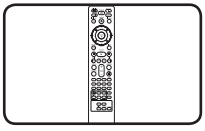

Remote control (1)

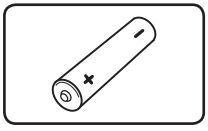

Batteries (1)

Introduction

Playable Discs

This unit plays DVD±R/RW and CD-R/RW that contains audio titles, DivX, MP3, WMA and/or JPEG files. Some DVD±RW/DVD±R or CD-RW/CD-R cannot be played on this unit due to the recording quality or physical condition of the disc, or the characteristics of the recording device and authoring software.

DVD VIDEO	DVD-VIDEO (8 cm / 12 cm disc) Discs such as movies that can be purchased or rented.
DVD R	DVD±R (8 cm / 12 cm disc) Video mode and finalized only.
DVD RW	DVD-RW (8 cm / 12 cm disc) Video mode and finalized only.
RW DVD+R	DVD+R: Video mode only Supports the double layer disc also.
RW DVD+ReWritable	DVD+RW (8 cm / 12 cm disc) Video mode and finalized only.
COMPACT disc DIGITAL AUDIO	Audio CD: Music CDs or CD-R/CD-RW in music CD format that can be purchased.

About the "⊘" Symbol Display

"⊘" may appear on your TV display during operation and indicates that the function explained in this owner's manual is not available on that specific media.

Symbols Used in this Manual

DVD	DVD and finalized DVD±R/RW
ACD	Audio CDs
MUSIC	WMA / MP3 files
MOVIE	Video files contained in the USB/Disc
PHOTO	Photo files

Note

Indicates special notes and operating features.

Tip

Indicates tip and hints for making the task easier.

Caution

Indicates cautions for preventing possible damages from abuse.

Regional Codes

This unit has a regional code printed on the rear of the unit. This unit can play only DVD discs labeled same as the rear of the unit or "ALL".

- Most DVD discs have a globe with one or more numbers in it clearly visible on the cover. This number must match your unit's regional code or the disc cannot play.
- If you try to play a DVD with a different regional code from your unit, the message "Check Regional Code" appears on the TV screen.

Playable file Requirement

Music file requirement

MP3/ WMA file compatibility with this unit is limited as follows :

- Sampling Frequency : 32 - 48 kHz (MP3), 32 - 48 kHz (WMA)
- Bit rate : 32 - 320 kbps (MP3), 40 - 192 kbps (WMA)
- Maximum files : Under 999
- File extensions : ".mp3"/ ".wma"
- CD-ROM file format : ISO9660/ JOLIET
- We recommend that you use "Easy-CD Creator", which creates an ISO 9660 file system.
- You have to set the disc format option to [mastered] in order to make the discs compatible with the LG player when formatting rewritable discs. When setting the optin to Live File System, you cannot use it on LG players. (mastered/ Love File System : Disc format sysyem for Windows Vista)

The DTS is not supported. In case of DTS audio format, audio is not output.

Photo file requirement

Photo file compatibility with this unit is limited as follows :

- Max pixel in width : 2760 x 2048 pixel
- Maximum files : Under 999
- Some discs may not operate due to a different recording format or the condition of disc.
- File extensions: ".jpg"
- CD-ROM file format : ISO9660/ JOLIET

DivX file requirement

DivX file compatibility with this unit is limited as follows:

- Available resolution:
  up to 720 x 576 (W x H) pixels.
- The file name of the DivX subtitle should be entered 45 characters or less.
- If there is a code impossible to express in the DivX file, it may be displayed as a " _ " mark on the display.
- Frame rate : less than 30 fps.
- If the video and audio structure of recorded files are not interleaved, either video or audio is output.
- Playable DivX file : ".avi", ".mpg", ".mpeg", ".divx"
- Playable Subtitle format : SubRip (*.srt/ *.txt), SAMI (*.smi), SubStation Alpha (*.ssa/ *.txt), MicroDVD (*.sub/ *.txt), SubViewer 2.0 (*.sub/ *.txt), Vobsub (*.sub)
- Playable Codec format : "DIVX3.xx", "DIVX4.xx", "DIVX5.xx", "MP4V3", "3IVX".
- Playable Audio format : "AC3", "PCM", "MP3", "WMA".
- Sampling frequency : between 32 to 48 kHz (MP3), between 32 to 48 kHz (WMA)
- Bit rate : between 32 to 320 kbps (MP3), 40 to 192 kbps (WMA)
- For Discs formatted in Live file system, you can not use it on this unit.
- If the name of movie file is different from that of the subtitle file, during playback of a DivX file, subtitle may not be display.
- If you play a DivX file differ from DivX spec, it may not operate normally.

Compatible USB Devices

- MP3 Player : Flash type MP3 player.
- USB Flash Drive : Devices that support USB2.0 or USB1.1.
- The USB function of this unit does not support some USB devices.

USB device requirement

- Devices which require additional program installation when you have connected it to a computer, are not supported.
- Do not extract the USB device while in operation.
- For a large capacity USB, it may take longer than a few minute to be searched.
- To prevent data loss, back up all data.
- If you use a USB extension cable or USB hub, the USB device is not recognized.
- Using NTFS file system is not supported. (Only FAT(16/ 32) file system is supported.)
- This unit is not supported when the total number of files is 1000 or more.
- External HDD, Card readers, Locked devices, or hard type USB devices are not supported.
- USB port of the unit cannot be connected to PC. The unit cannot be used as a storage device.

Front panel

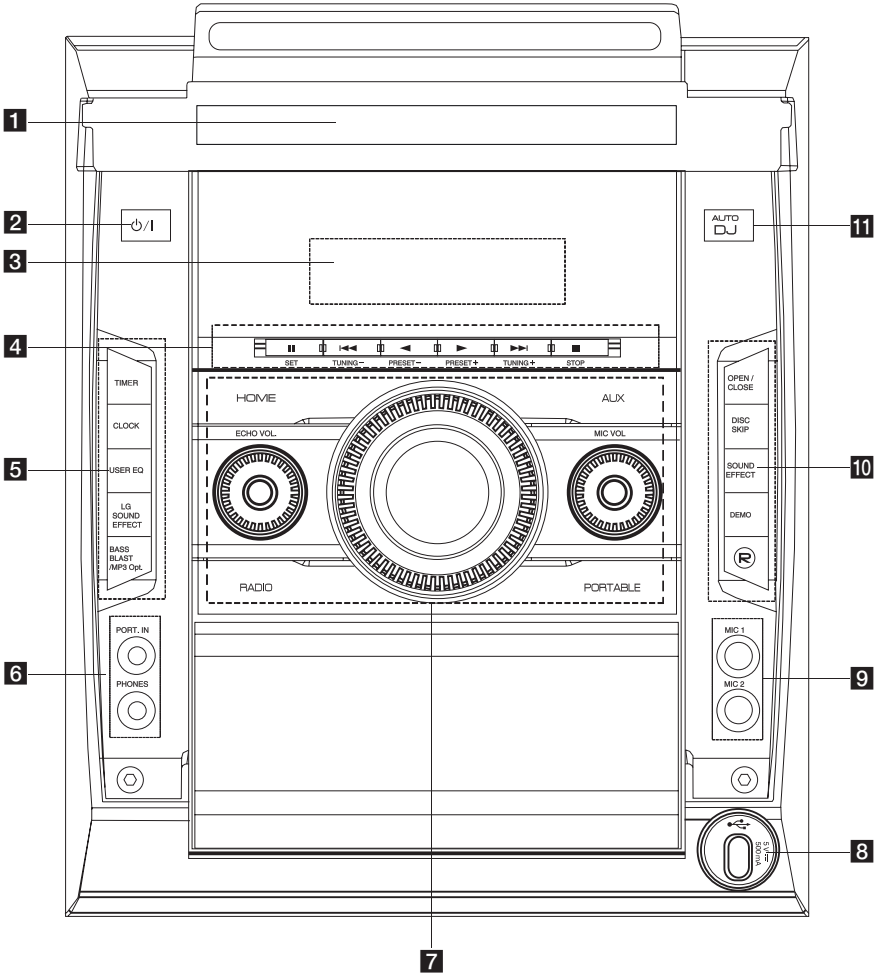
1
2
3
4
5
6
7
8
9
10
11
AUTO DJ
SET
TUNING−
PRESET−
PRESET+
TUNING+
STOP
HOME
AUX
ECHO VOL.
MIC VOL
RADIO
PORTABLE
TIMER
CLOCK
USER EQ
LG SOUND EFFECT
BASS BLAST /MP3 Opt.
OPEN / CLOSE
DISC SKIP
SOUND EFFECT
DEMO
PORT. IN
PHONES
MIC 1
MIC 2
5 V⎓ 500mA

1 Disc tray

2 ⏻/I (POWER)

3 Display window

4 **SET II**
- Pauses or confirms the setting.

TUNING(-/+) ⏮ / ⏭
- Selects the radio station.
- Selects the [MUSIC],[MOVIE],[PHOTO],[SETUP] menu.

PRESET(-) ◀
- Selects preset numbers.

PRESET(+) ▶
- Selects preset numbers.
- Selects disc in the [MUSIC],[MOVIE] menu.

STOP ■
- Stops playback or recording.

5 **TIMER**
- With the TIMER function you can turn CD, USB play and TUNER reception on or off at a desired time.

CLOCK
- Sets the clock and checks the time.

USER EQ
- Controls sound register.

LG SOUND EFFECT
- You can select a Natural or Local Specialization equalizer effect.

BASS BLAST/MP3 Opt.
- Reinforces the treble, bass and surround effect.
- Optimizes compressible MP3 file to improve the treble sound.

6 **PORT. IN**

PHONES

7 **HOME**
- Displays the [HOME] menu.

AUX
- Selects the AUX function.

ECHO VOL
- Adjusts echo volume.

MASTER VOLUME
- Controls the volume when using any function.

MULITI JOG DIAL
- Moves to the another file/ track or you can select the tuning range.

MIC VOL
- Adjusts microphone volume.

RADIO
- Selects the RADIO function.

PORTABLE
- Selects the PORTABLE function.

8 USB port
- Plays or records the audio files by connecting the USB device.

9 **MIC 1 / MIC 2**
- Connects a microphone to this jack.

10 **R** (Record)
- Starts recording.

DEMO
- Demonstrates each of functions.

SOUND EFFECT
- Selects a sound effect mode.

DISC SKIP
- Choose a desired disc.

OPEN/CLOSE
- Opens and closes the disc tray Disc tray

11 **AUTO DJ**
- Selects the AUTO DJ mode.

Rear panel

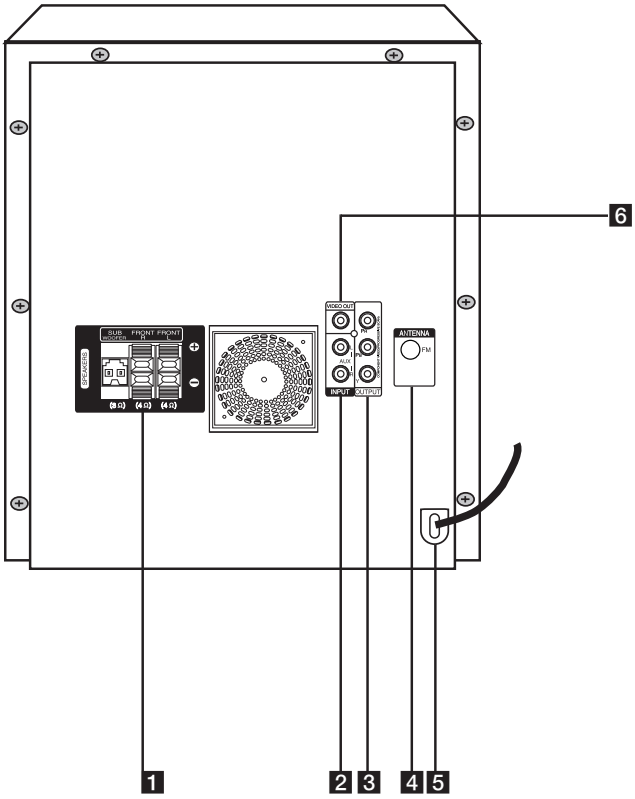

1 **SPEAKERS** terminal
2 **IN PUT (AUX)** connector
3 **OUTPUT (COMPONENT VIDEO)**connector
4 **ANTENNA (FM)**
5 Power cord
6 **VIDEO OUT** connector

Remote control

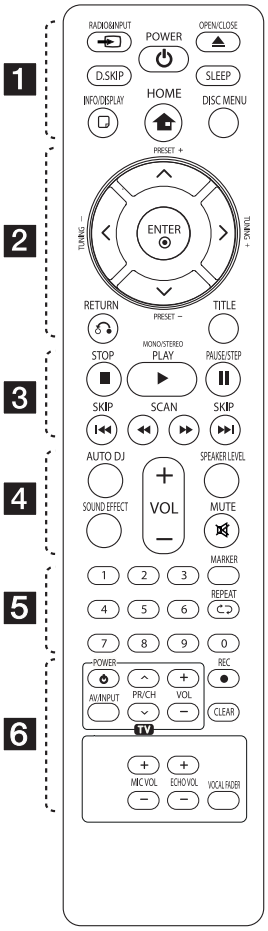

Battery Installation

Remove the battery cover on the rear of the Remote Control, and insert one (size AAA) battery with ⊕ and ⊖ matched correctly.

• • • • • • 1 • • • • •

RADIO&INPUT: Changes input sources.

D.SKIP : Choose a desired disc.

POWER: Switches the unit ON or OFF.

OPEN/CLOSE: Opens and closes the disc Drawer.

SLEEP: Sets the System to turn off automatically at a specified time. (Dimmer : The display window will be darken by half.)

INFO/DISPLAY: Accesses On-Screen Display.

HOME: Displays the [Home Menu].

DISC MENU: Accesses the menu on a DVD disc.

• • • • • • 2 • • • • •

∧ / ∨ / < / > (up/ down/ left/ right)**:** Used to navigate on-screen displays.

PRESET +/-: Selects programme of Radio.

TUNING +/-: Tunes in the desired radio station.

ENTER: Acknowledges menu selection.
Presetting the radio stations.

RETURN: Moves backwards in the menu or exits the setup menu.

TITLE: If the current DVD title has a menu, the title menu appears on the screen. Otherwise, the disc menu may not appear.

• • • • • • 3 • • • • •

■ **STOP:** Stops playback.

▶ **PLAY, MONO/STEREO:** Starts playback. Selects Mono/ Stereo.

❚❚ **PAUSE/STEP:** Pauses playback.

⏮ / ⏭ SKIP: Goes to the next or previous chapter / track / file.

◀◀ / ▶▶ SCAN: Searches backward or forward.

• • • • • • 4 • • • • •

AUTO DJ : Selects the AUTO DJ mode. (For more information refer to the page 29)

SOUND EFFECT: Selects a sound effect mode.

VOL -/+ (Volume): Adjusts speaker volume.

SPEAKER LEVEL: Sets the sound level of desired speaker.

MUTE: Mutes the sound.

• • • • • • 5 • • • • •

0-9 numerical buttons: Selects numbered options in a menu.

MARKER: Marks play list.

REPEAT: Selects a play mode. (Repeat/ Random)

• • • • • • 6 • • • • •

TV Control buttons: Controls the TV. (LG TV only)

- You can control the sound level, input source, and power switching of LG TVs as well. Hold POWER (TV) and press PR/ CH (∧ / ∨) button repeatedly until the TV turns on or off.

● **REC:** USB Direct Recording.

CLEAR: Removes a number when setting the password.

MIC VOL -/+ : Adjusts microphone volume.

ECHO VOL -/+ : Adjusts echo volume.

VOCAL FADER : You can enjoy the function as karaoke, by reducing singer vocal of music in the various source.

Connecting to speakers

Attaching the speakers to the unit

Connect the wires to the unit. Match each wire's colored band to the same colored connection terminal on the rear of the unit. To connect the cable to the unit, press each plastic finger pad to open the connection terminal. Inset the wire and release the finger pad.

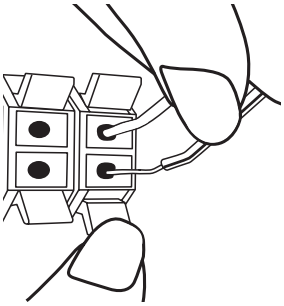

Attaching the subwoofer to the unit.

Connect the black stripe of each wire to the terminals marked -(minus) and the other end to the terminals marked + (plus).

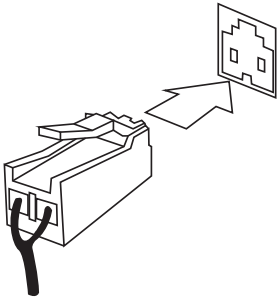

Color	Speaker	Position
Orange	Sub woofer	Any front position
Red	Front	Front right
White	Front	Front left

To connect the cable to the speakers, press each plastic finger pad to open the connection terminals on the base of each speaker. Insert the wire and release the finger pad.

Caution

- Be careful to make sure children do not put their hands or any objects into the *speaker duct.
  *Speaker duct : A hole for plentiful bass sound on speaker cabinet (enclosure).
- The speakers contain magnet parts, so color irregularity may occur on the TV screen or PC monitor screen. Please use the speakers far away from either TV screen or PC monitor.
- Do not connect any other speaker except sub woofer speaker to the sub woofer connection terminal on the rear of the unit.

Positioning the system

The following illustration shows an example of positioning the system. Note that the illustrations in these instructions differ from the actual unit for explanation purposes.

For the best possible surround sound, all the speakers other than the subwoofer should be placed at the same distance from the listening position (Ⓐ).

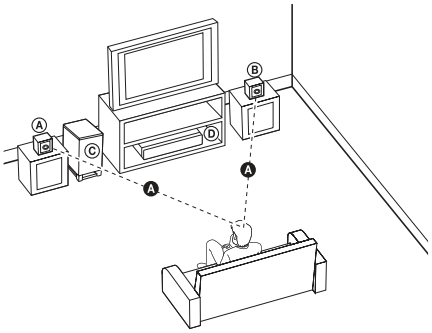

Ⓐ Front left speaker (L)/ Ⓑ Front right speaker (R): Place the front speakers to the sides of the monitor or screen and as flush with the screen surface as possible.

Ⓒ Subwoofer: The position of the subwoofer is not so critical, because low bass sounds are not highly directional. But it is better to place the subwoofer near the front speakers. Turn it slightly toward the center of the room to reduce the wall reflections.

Ⓓ Unit

Connections to Your TV

Make one of the following connections, depending on the capabilities of your existing equipment.

Note

- Depending on your TV and other equipment you wish to connect, there are various ways you could connect the unit. Use only one of the connections described in this manual.
- Please refer to the manuals of your TV, Stereo System or other devices as necessary to make the best connections.
- Make sure the unit is connected directly to the TV. Tune the TV to the correct video input channel.
- Do not connect your unit via your VCR. The image could be distorted by the copy protection system.

Component Video Connection

Connect the COMPONENT VIDEO OUTPUT (PROGRESSIVE SCAN) jacks on the unit to the corresponding input jacks on the TV by using component cables.
You can hear the sound through the system's speakers.

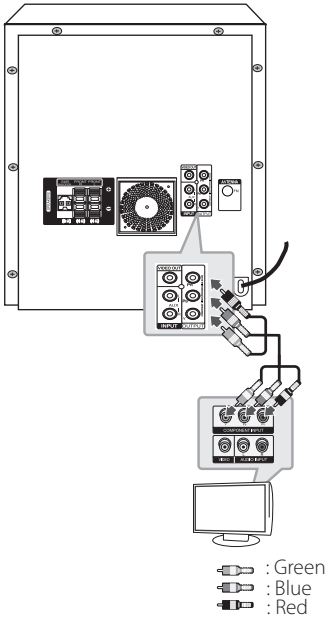

Video Connection

Connect the VIDEO OUT jack on the unit to the video in jack on the TV by using a video cable.

You can hear thr sound through the system's speakers.

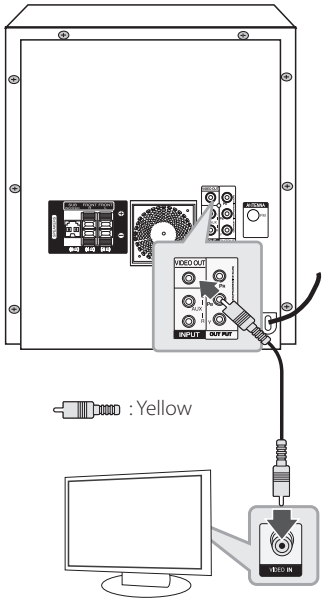

Optional Equipment Connection

AUX In Connection

Connect an Output of auxiliary device to the AUX (L/R) IN Connector.

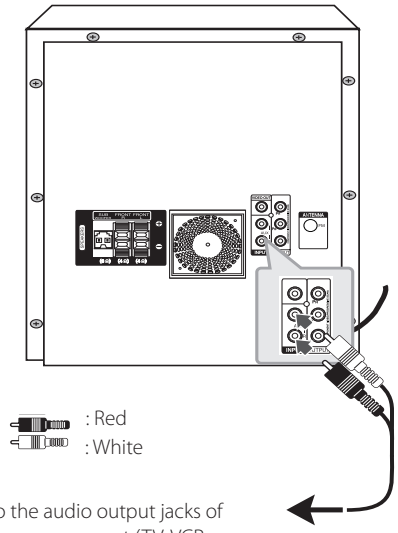

Note

If your TV has only one output for audio (mono), connect it to the left (white) audio jack on the unit.

AUDIO (PORT. IN) In Connection

Connect an output of portable device (MP3 or PMP etc) to the AUDIO (PORT. IN) input connector.

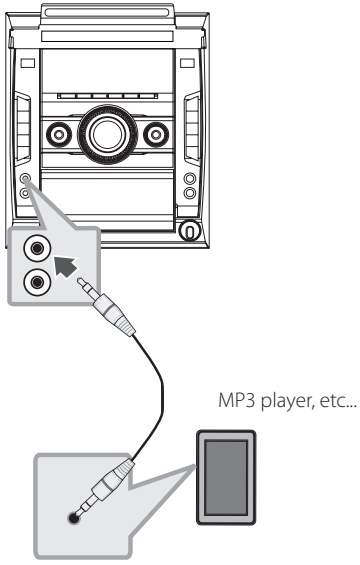

Enjoying audio from an external source and selecting the function

You can enjoy audio from an external source through your unit. And you can select the function.

Press **RADIO&INPUT** repeatedly to select the desired input source or the function. - DVD/CD, AUX, PORTABLE, FM.

USB Connection

Connect the USB port of USB Memory (or MP3 player, etc.) to the USB port on the front of the unit.

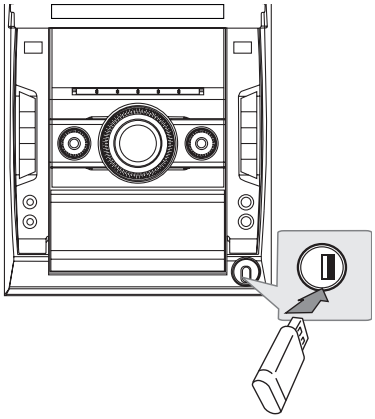

Note

Removing the USB Device from the unit

1. Choose a different function mode or press **STOP** (■) twice in a row.
2. Remove the USB device from the unit.

Antenna Connection

Connect the supplied FM antenna for listening to the radio.

Connect the FM wire antenna to the FM antenna connector.

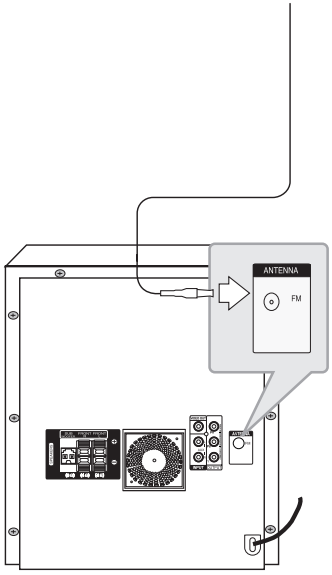

Adjust the setup settings

By using the Setup menu, you can make various adjustments to items such as picture and sound.

You can also set a language for the subtitles and the Setup menu, among other things. For details on each Setup menu item, see pages 20 to 24.

OSD Initial language settings - Optional

During the first use of this unit, the initial language setup menu appears on your TV screen. You must complete initial language selection before using the unit. English will be selected as the initial language.

1. Press ⏻/❙ (**POWER**) to turn the unit on. The language setup menu will appear on the screen.

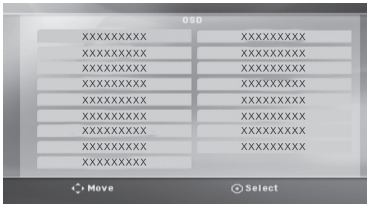

2. Use ∧/∨ or <,> to select a language then press ⦿ **ENTER**.
   The confirm menu will appear.

3. Use <,> to select the [Enter] then press ⦿ **ENTER** to finish the language setup.

To display and exit the Setup menu

1. Press **HOME**.
   Displays the [Home] Menu.

2. Select an [Setup] by using <,>.
3. Press ⦿ **ENTER**.
   Displays the [Setup].
4. Press **HOME** or **RETURN** to exit in the [Setup] Menu.

About help menu for Setup

Menu	Buttons	Operation
▲▼ **Move**	∧∨	Moving to another menu.
◄ **Move**	<	Moving to previous level.
► **Move**	>	Moving to next level or selecting menu.
Close	**RETURN**	To exit the [Setup] menu or [2.1 Speaker Setup].
⦿ **Select**	**ENTER**	To confirm menu.

Language

Menu Language

Select a language for the Setup menu and then on screen display.

Disc Audio / Disc Subtitle / Disc Menu

Select the language you prefer for the audio track (disc audio), subtitles, and the disc menu.

[Original]

Refers to the original language in which the disc was recorded.

[Other]

To select another language, press numeric buttons and then ⦿ **ENTER** to enter the corresponding 4-digit number according to the language code list on the page 40. If you enter the wrong language code, press **CLEAR**.

[Off (for Disc Subtitle)]

Turn off Subtitle.

Display

TV Aspect

Select which screen aspect to use based on the shape of your TV screen.

[4:3]

Select when a standard 4:3 TV is connected.

[16:9]

Select when a 16:9 wide TV is connected.

Display Mode

The Display Mode setting works only when the TV Aspect mode is set to 4:3.

[Letterbox]

Displays a wide picture with bands on the upper and lower portions of the screen.

[Panscan]

Automatically displays the wide picture on the entire screen and cuts off the portions that do not fit. (If the disc/file is not compatible with Pan Scan, the picture is displayed at Letterbox ratio.)

Progressive Scan (For Component Video connections)

Selects whether the COMPONENT VIDIO (PROGRESSIVE SCAN) OUTPUT jacks progressive signal. If your TV accepts progressive format signals, you will enjoy accurate color reproduction and high quality image by selecting [On]. If your TV does not accept progressive format signals, select [Off].

If you set Progressive Scan to [On] in error, you must reset the unit. First, remove the disc in the unit. Next, press and hold **STOP** ■ for five seconds. The video output will be restored to the standard setting, and a picture will be visible on your TV.

Audio

2.1 Speaker Setup

Make the following settings for the built-in 2.1 channel surround decoder.

1. Select [2.1 Speaker Setup] on the [Audio] menu.
2. Press ⦿ **ENTER**.
   The [2.1 SPEAKER] appears.

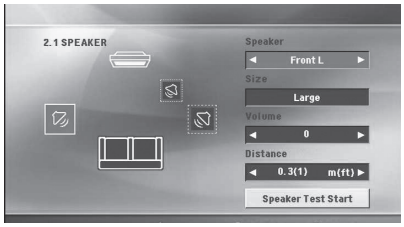

3. Use <> to select the desired speaker.
4. Adjust options using ∧∨<> buttons.
5. Returns to the previous menu by pressing ↶ **RETURN**.

[Speaker]

Select a speaker that you want to adjust.

Note

Certain speaker settings are prohibited by the Dolby Digital licensing agreement.

[Size]

Since the speaker settings are fixed, you cannot change the settings.

[Volume]

Adjust the output level of each speaker.

[Distance]

Adjust the distance between each speaker and the listening position.

[Speaker Test Start]

Select [Speaker Test Start] by using the ∧∨ and press ⦿ **ENTER**. Press ⦿ **ENTER** again to stop. Adjust the volume to match the volume of test signals memorized in the system.

DRC (Dynamic Range Control)

Make the sound clear when the volume is turned down (Dolby Digital only). Set to [On] for this effect.

Vocal

Select [On] to mix karaoke channels into normal stereo.

This function is effective for multi-channel karaoke DVDs only.

Semi Karaoke

When a chapter/ title/ track is fully finished, this function shows the score in the screen with a fanfare sound.

[On]

When you finished singing a score will appear on the screen.

[Off]

Fanfare and score do not appears on the screen.

Note

- DVD, DVD Karaoke discs with more than 2 tracks are available discs for the this function.
- When you watch movies, "off " the Semi Karaoke at the SETUP menu or enjoy it without connecting the MIC if the fanfare or score appears during changing a chapter.
- This function operate on the DVD/CD mode.
- The Semi Karaoke function is available only when a microphone is connected.

Lock (Parental Control)

Initial Setting the Area Code:

When you use this unit for the first time, you have to set the Area Code.

1. Select the [Lock] menu and then press >.
2. Press >.
   To access the [Lock] options, you must input the password you have created. Input a password and press ⊙ **ENTER**. Enter it again and press ⊙ **ENTER** to verify. If you make a mistake before pressing ⊙ **ENTER**, press **CLEAR**.
3. Select the first character using ∧∨ buttons.
4. Press ⊙ **ENTER** and select the second character using ∧∨ buttons.
5. Press ⊙ **ENTER** to confirm your Area code selection.

Rating

Blocks playback of rated DVDs based on their contents. Not all discs are rated.

1. Select [Rating] on the [Lock] menu then press >.
2. Input a password and press ⊙ **ENTER**.
3. Select a rating from 1 to 8 using the ∧∨ buttons.

[Rating 1-8]

Rating one (1) has the most restrictions and rating eight (8) is the least restrictive.

[Unlock]

If you select unlock, parental control is not active and the disc plays in full.

4. Press ⊙ **ENTER** to confirm your rating selection.

Password

You can enter or change password.

1. Select [Password] on the [Lock] menu and then press >.
2. Press ⊙ **ENTER**.
3. Input a password and press ⊙ **ENTER**.

   To change the password, press ⊙ **ENTER** when the [Change] option is highlighted. Input a password and press ⊙ **ENTER**. Enter it again and press ⊙ **ENTER** to verify.
4. Press ⌂ **HOME** to exit the menu.

Note

If you forget your password, you can clear it using the following steps:

1. Select the [Setup] menu on the [Home Menu].
2. Input the 6-digit number "210499" and press ⊙ **ENTER**. The password is cleared.

Area Code

Enter the code of the area whose standards were used to rate the DVD video disc, based on the list on page 39.

1. Select [Area Code] on the [Lock] menu then press >.
2. Input a password and press ⊙ **ENTER**.
3. Select the first character using ∧∨ buttons.
4. Press ⊙ **ENTER** and select the second character using ∧∨ buttons.
5. Press ⊙ **ENTER** to confirm your Area code selection.

Others

DivX® VOD

ABOUT DIVX VIDEO: DivX® is a digital video format created by DivX, LLC, a subsidiary of Rovi Corporation. This is an official DivX Certified® device that has passed rigorous testing to verify that it plays DivX video. Visit divx.com for more information and software tools to convert your files into DivX videos.

ABOUT DIVX VIDEO-ON-DEMAND: This DivX Certified® device must be registered in order to play purchased DivX Video-on-Demand (VOD) movies.

To obtain your registration code, locate the DivX VOD section in your device setup menu. Go to vod.divx.com for more information on how to complete your registration.

[Register] Displays the registration code of your player.
[Deregister] Deactivate your player and display the deactivation code.

Note

All the downloaded videos from DivX® VOD can only be played back on this unit.

Using the Home Menu

1. Press **HOME**.
   Displays the [Home Menu].

2. Select an option by using </>.
3. Press **ENTER** then selected option menu.

[Music] – Displays [MUSIC] menu.

[Movie] – Start video media's playback or displays the [MOVIE] menu.

[Photo] – Displays [PHOTO] menu.

[Setup] – Displays the [Setup] menu.

Basic Operations

CD / USB

1. Insert the disc by pressing **OPEN/CLOSE** or connect the USB device to the USB port.
2. Press **HOME**.
   Displays the [Home] Menu.
3. Select an option by using </>.
   If you select the [Movie], [Photo] or [Music] option when you connect up to two devices, it appears as belows.

4. Press **ENTER** then selected option menu.

Note

- For the most Audio CD and DVD-ROM discs, playback starts automatically.
- The unit plays only music file contained in the USB storage device or disc automatically.

To	Do this
Stop	Press ■ **STOP**.
Playback	Press ▶ **PLAY, MONO/ STEREO**.
Pause	Press ❚❚ **PAUSE/STEP**.
Frame-by-Frame playback	During playback, press ❚❚ **PAUSE/STEP** repeatedly to play title Frame-by-Frame. (DVD, DivX only)
Skipping to the next/ previous chapter/ track/ file	During playback, press or rotate; (1) to go to the next track/ file or to return to the beginning of current track/ file: - On the remote control : ⏮ or ⏭ - On the unit: MULITI JOG DIAL or ⏮ / ⏭ (2) to go back to the previous track/file: - On the remote control: ⏮ - On the unit: MULITI JOGDIAL or ⏮
Locating a point quickly by playing a file in fast forward or fast reverse	During playback, press and hold ◀◀ or ▶▶ on remote control or ◀◀ or ▶▶ on the unit repeatedly to select the required scan speed. To return to normal speed, press ▶ **PLAY , MONO/STEREO**.
Playing repeatedly or randomly	Press **REPEAT** repeatedly, and the current title, chapter or track will be played back repeatedly or randomly. - Random play mode : only music files.
Slowing down the playing speed	In the pause mode, press **SCAN** (◀◀ or ▶▶) to select the required speed. (DVD, DivX only) The DivX file cannot be slow down reverse playback.

Other Operations

Displaying Disc Information on-screen

You can display various information about the disc loaded on-screen.

1. Press **INFO/DISPLAY** to show various playback information.
   The displayed items differ depending on the disc type or playing status.
2. You can select an item by pressing Λ/V and change or select the setting by pressing <,>.

Title – Current title number/ total number of titles.

Chapter – Current chapter number/ total number of chapters.

Time – Elapsed playing time.

Audio – Selected audio language or channel.

Subtitle – Selected subtitle.

Angle – Selected angle/ total number of angles.

Note

If any button is not pressed for a few seconds, the on-screen display disappears.

To display the DVD Menu

DVD

When you play a DVD which contains several menu, you can select the menu you want using the Menu.

1. Press **DISC MENU**.
   The disc's menu appears.
2. Select the menu by using ∧∨<>.
3. Press ▶ **PLAY** to confirm.

To display the DVD title

DVD

When you play a DVD which contains several title, you can select the title you want using the Menu.

1. Press **TITLE**.
   The disc's title appears.
2. Select the menu by pressing ∧∨<>.
3. Press ▶ **PLAY, MONO/STEREO** to confirm.

Starting play from selected time

DVD MOVIE

To start playing at any chosen time on the file or title.

1. Press ☐ **INFO/DISPLAY** during playback.
2. Press ∧∨ to select the time clock icon and "--:--:--" appears.
3. Input the required start time in hours, minutes, and seconds from left to right. If you enter the wrong numbers, press **CLEAR** to remove the numbers you entered. Then input the correct numbers.
   For example, to find a scene at 1 hour, 10 minutes, and 20 seconds, enter "11020" by using numerical buttons.
4. Press ⊙ **ENTER** to confirm. Playback starts from the selected time.

Marked Playback

MUSIC ACD

The mark function enables you to store your favourite files from any disc or USB device in the unit memory.

1. Select [Music] on the [Home Menu.]

Returning to the upper folder. (MP3/ WMA only)

File information will be displayed according to the ID3TAG information on the appropriate music file. (MP3 only)

Selecting all tracks/ files.

Deselecting all tracks/files.

Moving to the previous or next file list.

2. Select a desired music on the [List] by using the ∧/∨ then press **MARKER** to appears the mark on the list.
3. Press ⦿ **ENTER** or ▶ **PLAY, MONO/STEREO**. Displays the play mode.
4. Select the play mode by using the ∧/∨ and press ⦿ **ENTER**.

[Mark Play]

Marked playback.

[Current Play]

Normal playback.

Note

If you want to select all files on the list, select [Select All] and press ⦿ **ENTER**.

To delete a Marker

1. Use ∧/∨ to select the track that you wish to erase from the marked file.
2. Press **MARKER**.

To delete all Markers

Use ∧/∨ or <./> to select [Deselect All] then press ⦿ **ENTER** in program edit mode.

Note

The markers are also cleared when the disc or USB device is removed, the unit is switched to power off or the function is switched to others.

Changing subtitle code page

MOVIE

If the subtitle is not displayed properly, you can change the subtitle code page to view the subtitle file properly.

1. During playback, press ❑ **INFO/DISPLAY** to display the On-Screen display.
2. Use ∧/∨ to select the [Code Page] option.
3. Use <./> to select desired code option.
4. Press **RETURN** (↶) to exit the On-Screen display.

AUTO DJ playback

MUSIC ACD

Auto DJ blends the end of one song into the beginning of another for seamless playback. it equalizes volume across tracks for uninterrupted playback.

Press **AUTO DJ** on the remote control or unit repeatedly, the display changes as followings. order, RANDOM (AUTO DJ RANDOM) -> (AUTO DJ SEQUENTIAL) -> (AUTO DJ OFF).

Mode	Display Window	Description
OFF	- (AUTO DJ OFF)	-
RANDOM	RANDOM (AUTO DJ RANDOM)	The music is played randomly on this mode.
REPEAT	(AUTO DJ SEQUENTIAL)	The music is played repeatedly on this mode.

Note

- Searching for a section or playing repeatedly or randomly is not supported on the AUTO DJ mode.
- If you switch to other functions or stop the music using **STOP** on the unit (**ENTER** on the remote control) on AUTO DJ mode, AUTO DJ function will be disable.
- AUTO DJ function is not supported in the music file whose length is less than 60 seconds.
- All musics are repeated continually until the user deactivates the AUTO DJ function.
- During recording AUTO DJ function is not available.
- If you change a disc while the AUTO DJ function is activated the function is deactivated.

Viewing a PHOTO file

PHOTO

You can view photo files using this player.

1. Select [Photo] on the [Home Menu] and press ⦿ **ENTER**.

Moving to the previous or next file list.

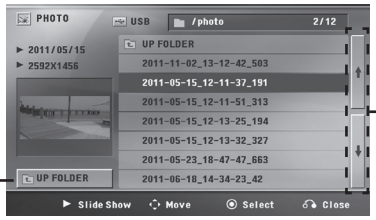

Returning to the upper folder.

2. Press ∧/∨ to select a folder, and then press ⦿ **ENTER**.
3. If you want to view a slide show, press ∧/∨ to highlight a file and press ▶ **PLAY**.

About help menu in the [Photo] menu

Menu	Buttons	Operation
▶ **Slide Show**	▶ **PLAY**	Viewing a slide show.
▲▼◀▶ **Move**	∧/∨<\/>	Moving to another file or content.
⦿ **Select**	⦿ **ENTER**	Viewing a particular file.
↶ **Close**	↶ **RETURN**	Returning to the [Home] Menu.

About help menu in the full screen

Menu	Buttons	Operation
Menu	**INFO/ DISPLAY**	Displaying the Option menu.
◄/► Prev./ Next	**</>**	Moving to another file.
CLOSE	**RETURN**	Returning to the [Photo] menu.

Options while viewing a photo

You can use various options during viewing a photo in full screen.

1. While viewing a photo in full screen, press **INFO/DISPLAY** to display the option menu.
2. Select an option using ∧∨<>.

1	**Current photo/ Total number of photos** – Use **</>** to view previous/next photo.
2	**Slide Show ►/II**– Press **ENTER** to start or pause slide show.
3	**Speed x3/ x2/ x1** – Use **ENTER** to select a delaying speed between photos in a slide show.
4	**Rotate** – Press **ENTER** to rotate the photo.
5	**Go to list** – Press **ENTER** to return [Photo] menu.

Sleep Timer Setting

Press **SLEEP** one or more times to select delay time between 10 and 180 minutes, after the unit will turn off.

To check the remaining time, press **SLEEP**.

To cancel the sleep function, press **SLEEP** repeatedly until "SLEEP 10" appears, and then press **SLEEP** once again while "SLEEP 10" is displayed.

Note

You can check the remaining time before the Unit turns off.

Press **SLEEP** The remaining time appears in the display window.

Dimmer

Press **SLEEP** once. The display window will be darken by half. To cancel it, press **SLEEP** repeatedly until dim off.

Turn off the sound temporarily

Press **MUTE** to mute your unit.

You can mute your unit in order, for example, to answer the telephone, the appears in the display window.

1.5 times speed playback

DVD

The 1.5 speed allows you to watch the pictures and listen to the sound quicker than playing at a normal speed.

1. During playback, press **PLAY** to play at 1.5 times speed. "►X1.5" appears on the screen.
2. Press **PLAY** again to exit.

Screen Saver

The screen saver appears when you leave the unit in Stop mode for about five minutes.

System Select - Optional

You must select the appropriate system mode for your TV system. Press and hold **II (PAUSE/STEP)** for more than five seconds to be able to select a system in the [Home] menu.

Last Scene Memory

DVD

This unit memorizes last scene from the last disc that is viewed. The last scene remains in memory even if you remove the disc from the unit or switch off the unit. If you load a disc that has the scene memorized, the scene is automatically recalled.

DEMO

In the power off state, it demonstrates the function on display window.

VOCAL FADER

You can enjoy the function as karaoke, by reducing singer vocal of music in the various source. (MP3/ WMA/ CD/ etc.) Press the **VOCAL FADER**, and "FADE ON" will appear in display window.

To cancel it, press **VOCAL FADER** again.

The quality of the **VOCAL FADER** may be different depending on the recording conditions of music files.

This function is available only when MIC is connected.

Note

- This function is available to use only when a microphone is connected.
- It is not available on the MONO source.

Radio Operations

Be sure that FM aerials are connected.
(Refer to the page 19.)

Listening to the radio

1. Press **RADIO&INPUT** until FM appears in the display window.
   The last received station is tuned in.
2. Press and hold **TUNING (-/+)** for about two seconds until the frequency indication starts to change, then release. Scanning stops when the unit tunes in a station.

   or

   Press **TUNING (-/+)** repeatedly.
3. Adjust the volume by pressing **VOL (-/+)** repeatedly.

Presetting the Radio Stations

You can preset 50 stations for FM.

Before tuning, make sure that you have turned down the volume.

1. Press **RADIO&INPUT** on the remote control or **RADIO** on the unit until FM appears in the display window.
2. Press or rotate to select a desired frequency;
   - On the remote control: **TUNING** (-/+)
   - On the unit: **MULITI JOG DIAL** or ⏮ / ⏭.
3. Press **ENTER**. A preset number will flash in the display window.
4. Press **PRESET (-/+)** to select the preset number you want.
5. Press **ENTER**.
   The station is stored.
6. Repeat the steps 2 to 5 to store other stations.
7. Press to select a preset station;
   - On the remote control: **PRESET -/+** or **0 to 9 numerical buttons.**
   - On the remote control: **PRESET -** / **PRESET +**

Deleting all the saved stations

1. Press and hold **CLEAR** for two seconds.
   "ERASE ALL" will flash up on the unit display.
2. Press **CLEAR** to erase all saved of the radio stations.

Deleting a saved station

1. Press **PRESET - / +** to select a preset number you want to delete.
2. Press **CLEAR**, the preset number will blink in the display window.
3. Press **CLEAR** again, to delete the selectd preset number.

Improving poor FM reception

Press ▶ **PLAY, MONO/STEREO** on the remote control. This will change the tuner from stereo to mono and usually improve the reception.

Setting the Clock

1. Turn the power on.
2. Press **CLOCK** for at least 2 seconds
3. Choose from either, by rotating the **MULTI JOG DIAL** knob or pressing **⏮ / ⏭**.
   - AM 12:00 (for an AM and PM display) or 0:00 (for a 24 hour display).
4. Press **SET** for confirm your selection
5. Select the hours, by rotating the **MULTI JOG DIAL** knob or pressing **⏮ / ⏭**.
6. Press **SET**.
7. Select the minutes, by rotating the **MULTI JOG DIAL** knob or pressing **⏮ / ⏭**.
8. Press **SET**.

Using your player as an alarm clock

1. Turn the power on.
2. Press **TIMER**. Each functions flashes.
3. Press **SET** when the function you want to be woken by is showing.
4. "ON TIME" will be displayed. This is where you set the time you want the alarm to start. Rotate the **MULTI JOG DIAL** knob or press **⏮ / ⏭** to change the hours and minutes and **SET** to save.
5. The "OFF TIME" will be displays. This is where you set the time you want the function to stop.
6. Rotate the **MULTI JOG DIAL** knob or press **⏮ / ⏭** to change the hours and minutes and press **SET** to save.
7. Rotate the **MULTI JOG DIAL** knob or press **⏮ / ⏭** to change the hours and minutes and press **SET** to save. The clock icon "🕒" shows that the alarm is set.
8. Press **TIMER** button 2 times. You can check the setting status.

Note

- If you set the clock time, you can check the time by pressing **CLOCK** even when the player is turned off.
- If you set the clock time and alarm, you can check the alarm icon "🕒" by pressing **CLOCK** even when the player is turned off.
- If you set the clock time and alarm, you can check the alarm icon "🕒" and setting information by pressing **TIMER** even when the unit is turned off.

Sound adjustment

Setting the surround mode

This system has a number of pre-set surround sound fields. You can select a desired sound mode by using **SOUND EFFECT**.

You can change the **SOUND EFFECT** using <I/> arrow key while the sound effect information is displayed on.

The displayed items for the equalizer may be different depending on sound sources and effects.

On Display	Description
NAT PLUS (Optional)	The NAT PLUS is Natural Plus sound effect. You can enjoy the natural sound effect same as a 5.1-channel.
NATURAL (Optional)	You can enjoy comfortable and natural sound.
Local Specialization equalizer (Optional)	Regionally optimized sound effect. (DANGDUT/ ARABIC/ PERSIAN/ INDIA/ REGUETON/ MERENGUE/ SALSA/ SAMBA/ CUMBIA/ AFRO)
AUTO EQ	Sets the sound equalizer to the mode that is the most similar to the genre which is included in the MP3 ID3 tag of song files.
POP CLASSIC JAZZ ROCK	This program lends an enthusiastic atmosphere to the sound, giving you the feeling you are at an actual rock pop, jazz or classic concert
MP3 - OPT	This function is optimized for compressible MP3 file. It improves the treble sound.
BASS BLAST	During playback, reinforce the treble, bass and surround sound effect.
LOUDNESS	mproves the bass and treble sound
VIRTUAL	You can enjoy more virtual surround sound.
BYPASS	You can enjoy the sound without equalizer effect.

Note

- In some of surround modes, some speakers, there's no sound or low sound. Depending on the mode of surround and the source of audio, it is not defective.
- You may need to reset the surround mode, after switching the input, sometimes even after the sound track changed.

Adjust the speaker level settings

You can adjust the sound level of each speaker.

1. Press **SPEAKER LEVEL** repeatedly to selcet a desired speaker to set.
2. Press **VOL -/+** to adjust the sound level of the selected speaker while the level setting menu is displayed on the display window.
3. Repeat and adjust the sound level of the other speakers.

Setting the USER EQ

You can listen to music with the desired sound effect by adjusting the BASS, MIDDLE and TREBLE.

1. Press **USER EQ**.
   "USER EQ" is displayed.
2. Press **SET** to enter the **USER EQ**.
3. Select the BASS, MIDDLE or TREBLE sound effect you want by using **PRESET(-/+)**
4. Press **TUNING(-/+)** or rotating **MULTI JOG DIAL** on the unit to select the sound level you want.
5. To finish the setting, press **SET**

Advanced Operations

Listening to music from your external device

The unit can be used to play the music from many types of portable player or external devices.
(Refer to the page 18)

1. Connect the external device to the PORT. IN connector of the unit.

   Or

   Connect the external device to the AUX connector of the unit.
2. Turn the power on by pressing ⏻(**POWER**) on the remote control or ⏻/**|**(POWER) on the unit.
3. Select the PORTABLE or AUX (L/R) INPUT function by pressing **RADIO&INPUT**.
4. Turn the external device on and start playing it.

Note

The audio output can be delayed when you switch to Analog input mode while a large capacity USB device or USB device with many files is inserted.

Recording to USB

You can record music or sound souce to USB device by connecting in to the port on the unit.

1. Connect the USB device to the unit.
2. Select a mode in which you want to record. Play back a sound source first.
3. Start the recording by pressing ● **REC**.
4. To stop recording, press ■ **STOP**.

[All tracks/ files recording]

Record to USB in stop or play mode.

[Program list recording]

After marking desired file(s) and you can record it to USB (Refer to the page 28).

Note

- You can check the recording percentage rate for the USB record in the display window during recording. (MP3/ WMA CD/ AUDIO CD Only)
- During recording, MP3/ WMA, there is no sound.
- When you stop recording during playback, the file that has been recorded at that time will be stored.
- Do not remove the USB device or turn off the unit during USB recording. If not, an incomplete file may be made and not be deleted on PC.
- If USB recording does not work, the message like "NO USB", "ERROR", "USB FULL" or "NO REC" is displayed in the display window.
- Multi card reader device or External HDD can not be used for USB recording.
- A file is recorded by 2 hours (about 128 Mbytes) when you record for a long term.
- You may not record more than 999 files.
- The file number is saved automatically.
- It'll be stored as follows.

AUDIO CD	MP3/ WMA	The other source*
CD_REC TRK_001 TRK_002 ⋮	FILE_REC 001_ ABC(File name) 002_ DEF(File name) ⋮	EXT_REC AUD_001 AUD_002 ⋮

* : TUNER, AUX and the like.

The making of unauthorized copies of copy-protected material, including computer programs, files, broadcasts and sound recordings, may be an infringement of copyrights and constitute a criminal offense. This equipment should not be used for such purposes.

Be responsible

Respect copyrights.

Troubleshooting

PROBLEM	CORRECTION
No power	Plug the power cord into the wall outlet securely.
No picture	Select the appropriate video input mode on the TV so the picture from the unit appears on the TV screen.
	Connect the video cables securely to both the TV and unit.
There is little or no sound	Select the correct input mode of the unit so you can hear the sound from the unit.
	Connect the audio cables into the connection terminals correctly.
	Replace with a new audio cable.
The DVD picture quality is poor	Clean the disc using a soft cloth with outward strokes.
A DVD/CD will not play	Insert a disc.
	Insert a playable disc (check the disc type, colour system and regional code).
	Place the disc with the label or printed side facing upwards.
	Enter your password or change the rating level.
Humming noise heard while a DVD or CD is playing	Clean the disc using a soft cloth with outward strokes.
	Move unit and audio components further away from your TV.
Radio stations can't be tuned in properly	Check the antenna connection and adjust its position.
	Attach an external aerial if necessary.
	Tune to the station manually.
	Preset some radio stations, see page 32 for details.
The remote control doesn't work well / at all	The remote is not pointed directly at the unit. Point the remote directly at the unit.
	The remote is too far from the unit. Use the remote within 23 feet (7m) of the unit.
	There is an obstacle in the path between the remote control and the unit. Remove the obstacle.
	The battery in the remote control are flat. Replace the battery with new ones.

Maintenance

Handling the Unit

When shipping the unit

Please save the original shipping carton and packing materials. If you need to ship the unit, for maximum protection, re-pack the unit as it was originally packed at the factory.

Keeping the exterior surfaces clean

- Do not use volatile liquids such as insecticide spray near the unit.
- Wiping with strong pressure may damage the surface.
- Do not leave rubber or plastic products in contact with the unit for a long period of time.

Cleaning the unit

To clean the player, use a soft, dry cloth. If the surfaces are extremely dirty, use a soft cloth lightly moistened with a mild detergent solution. Do not use strong solvents such as alcohol, benzine, or thinner, as these might damage the surface of the unit.

Maintaining the Unit

The unit is a high-tech, precision device. If the optical pick-up lens and disc drive parts are dirty or worn, the picture quality could be diminished. For details, please contact your nearest authorized service center.

Notes on Discs

Handling Discs

Do not touch the playback side of the disc. Hold the disc by the edges so that fingerprints do not get on the surface. Never stick paper or tape on the disc.

Storing Discs

After playing, store the disc in its case. Do not expose the disc to direct sunlight or sources of heat and never leave it in a parked car exposed to direct sunlight.

Cleaning Discs

Fingerprints and dust on the disc can cause poor picture quality and sound distortion. Before playing, clean the disc with a clean cloth. Wipe the disc from the center to out.

Do not use strong solvents such as alcohol, benzine, thinner, commercially available cleaners, or anti-static spray intended for older vinyl records.

Area Codes

Choose an area code from this list.

Area	Code	Area	Code	Area	Code	Area	Code
Afghanistan	AF	Fiji	FJ	Monaco	MC	Singapore	SG
Argentina	AR	Finland	FI	Mongolia	MN	Slovak Republic	SK
Australia	AU	France	FR	Morocco	MA	Slovenia	SI
Austria	AT	Germany	DE	Nepal	NP	South Africa	ZA
Belgium	BE	Great Britain	GB	Netherlands	NL	South Korea	KR
Bhutan	BT	Greece	GR	Antilles	AN	Spain	ES
Bolivia	BO	Greenland	GL	New Zealand	NZ	Sri Lanka	LK
Brazil	BR	Hong Kong	HK	Nigeria	NG	Sweden	SE
Cambodia	KH	Hungary	HU	Norway	NO	Switzerland	CH
Canada	CA	India	IN	Oman	OM	Taiwan	TW
Chile	CL	Indonesia	ID	Pakistan	PK	Thailand	TH
China	CN	Israel	IL	Panama	PA	Turkey	TR
Colombia	CO	Italy	IT	Paraguay	PY	Uganda	UG
Congo	CG	Jamaica	JM	Philippines	PH	Ukraine	UA
Costa Rica	CR	Japan	JP	Poland	PL	United States	US
Croatia	HR	Kenya	KE	Portugal	PT	Uruguay	UY
Czech Republic	CZ	Kuwait	KW	Romania	RO	Uzbekistan	UZ
Denmark	DK	Libya	LY	Russian Federation	RU	Vietnam	VN
Ecuador	EC	Luxembourg	LU	Saudi Arabia	SA	Zimbabwe	ZW
Egypt	EG	Malaysia	MY	Senegal	SN		
El Salvador	SV	Maldives	MV				
Ethiopia	ET	Mexico	MX				

Language Codes

Use this list to input your desired language for the following initial settings: Disc Audio, Disc Subtitle, Disc Menu.

Language	Code	Language	Code	Language	Code	Language	Code
Afar	6565	French	7082	Lithuanian	7684	Sindhi	8368
Afrikaans	6570	Frisian	7089	Macedonian	7775	Singhalese	8373
Albanian	8381	Galician	7176	Malagasy	7771	Slovak	8375
Amharic	6577	Georgian	7565	Malay	7783	Slovenian	8376
Arabic	6582	German	6869	Malayalam	7776	Spanish	6983
Armenian	7289	Greek	6976	Maori	7773	Sudanese	8385
Assamese	6583	Greenlandic	7576	Marathi	7782	Swahili	8387
Aymara	6588	Guarani	7178	Moldavian	7779	Swedish	8386
Azerbaijani	6590	Gujarati	7185	Mongolian	7778	Tagalog	8476
Bashkir	6665	Hausa	7265	Nauru	7865	Tajik	8471
Basque	6985	Hebrew	7387	Nepali	7869	Tamil	8465
Bengali; Bangla	6678	Hindi	7273	Norwegian	7879	Telugu	8469
Bhutani	6890	Hungarian	7285	Oriya	7982	Thai	8472
Bihari	6672	Icelandic	7383	Panjabi	8065	Tonga	8479
Breton	6682	Indonesian	7378	Pashto, Pushto	8083	Turkish	8482
Bulgarian	6671	Interlingua	7365	Persian	7065	Turkmen	8475
Burmese	7789	Irish	7165	Polish	8076	Twi	8487
Byelorussian	6669	Italian	7384	Portuguese	8084	Ukrainian	8575
Chinese	9072	Japanese	7465	Quechua	8185	Urdu	8582
Croatian	7282	Kannada	7578	Rhaeto-Romance	8277	Uzbek	8590
Czech	6783	Kashmiri	7583	Rumanian	8279	Vietnamese	8673
Danish	6865	Kazakh	7575	Russian	8285	Volapük	8679
Dutch	7876	Kirghiz	7589	Samoan	8377	Welsh	6789
English	6978	Korean	7579	Sanskrit	8365	Wolof	8779
Esperanto	6979	Kurdish	7585	Scots Gaelic	7168	Xhosa	8872
Estonian	6984	Laotian	7679	Serbian	8382	Yiddish	7473
Faroese	7079	Latin	7665	Serbo-Croatian	8372	Yoruba	8979
Fiji	7074	Latvian, Lettish	7686	Shona	8378	Zulu	9085
Finnish	7073	Lingala	7678				

Trademarks and Licenses

Manufactured under license from Dolby Laboratories. Dolby and the double-D symbol are trademarks of Dolby Laboratories. Confidential unpublished works. Copyright 1992–1997 Dolby Laboratories. All rights reserved.

"DVD Logo" is a trademark of DVD Format/Logo Licensing Corporation.

DivX Certified® to play DivX® video, including premium content.
DivX®, DivX Certified® and associated logos are trademarks of Rovi Corporation or its subsidiaries and are used under license.
Covered by one or more of the following U.S. patents: 7,295,673; 7,460,668; 7,515,710; 7,519,274.

Specifications

General	
Power supply	Refer to main label.
Power consumption	Refer to main label.
Net Weight	5.5 kg
External dimensions (W x H x D)	277 mm x 343.5 mm x 365.5 mm
Operating conditions Temperature	5 °C to 35 °C (41 °F to 95 °F) Operation status : Horizontal
Operating humidity	5 % to 85 %
Bus Power Supply	5 V ⎓ 500 mA

Inputs/ Outputs	
VIDEO OUT	1.0 V (p-p), 75 Ω, sync negative, RCA jack x 1
COMPONENT VIDEO OUT	(Y) 1.0 V (p-p), 75 Ω, sync negative, RCA jack x 1, (Pb)/(Pr) 0.7 V (p-p), 75 Ω, RCA jack x 2
ANALOG AUDIO IN	600 mV (1 kHz), 600 Ω, RCA jack (L, R) x 1
PORT. IN	0.4 Vrms (3.5 mm stereo jack)

Tuner	
FM Tuning Range	87.5 to 108.0 MHz or 87.50 to 108.00 MHz

Amplifier	
Output Power	Front : 156 W x 2 (4 Ω) Woofer : 203 W (3 Ω)
T.H.D	≤ 10 %
Frequency Response	140 Hz to 20 kHz
Signal-to-noise ratio	75 dB

CD	
Frequency response (audio)	40 to 20 000 Hz
Signal-to-noise ratio (audio)	More than 75 dB (1 kHz)
Dynamic range (audio)	More than 80 dB

Front Speaker	
Type	2 Way 2 speaker
Impedance Rated	4 Ω
Input Power	156 W
Max. Input Power	312 W
Net Dimensions (W x H x D)	240 mmx 387 mmx 336 mm
Net Weight	5 kg

Subwoofer	
Type	1 Way 1 Speaker
Impedance Rated	3 Ω
Input Power	203 W
Max. Input Power	406 W
Net Dimensions (W x H x D)	261 mm x 331 mm x 409 mm
Net Weight	6.5 kg

Design and specifications are subject to change without notice.

PT. LG ELECTRONICS INDONESIA
Kawasan Industri MM2100 Blok G
Cikarang Barat, Bekasi, Jawa Barat 17520
INDONESIA