LG
Life's Good

ENGLISH

OWNER'S MANUAL
LED TV*

* Disclaimer
LG LED TV applies LCD screen with LED backlights.

Please read this manual carefully before operating your set and retain it for future reference.

LB56**
LB55**
LB62**

www.lg.com

LICENSES

Supported licenses may differ by model. For more information about licenses, visit *www.lg.com*.

Manufactured under license from Dolby Laboratories. “Dolby” and the double-D symbol are trademarks of Dolby Laboratories.

The terms HDMI and HDMI High-Definition Multimedia Interface, and the HDMI logo are trademarks or registered trademarks of HDMI Licensing LLC in the United States and other countries.

ABOUT DIVX VIDEO: DivX® is a digital video format created by DivX, LLC, a subsidiary of Rovi Corporation. This is an official DivX Certified® device that has passed rigorous testing to verify that it plays DivX video. Visit divx com for more information and software tools to convert your files into DivX videos.

ABOUT DIVX VIDEO-ON-DEMAND: This DivX Certified® device must be registered in order to play purchased DivX Video-on-Demand (VOD) movies. To obtain your registration code, locate the DivX VOD section in your device setup menu. Go to vod.divx.com for more information on how to complete your registration.

“DivX Certified® to play DivX® video up to HD 1080p, including premium content.”

“DivX®, DivX Certified® and associated logos are trademarks of Rovi Corporation or its subsidiaries and are used under license.”

“Covered by one or more of the following U.S. patents :
7,295,673; 7,460,668; 7,515,710; 7,519,274”

(Only LB62**)

For DTS patents, see http://patents.dts.com. Manufactured under license from DTS Licensing Limited. DTS, the Symbol, & DTS and the Symbol together are registered trademarks, and DTS 2.0+Digital Out is a trademark of DTS, Inc. © DTS, Inc. All Rights Reserved.

OPEN SOURCE SOFTWARE NOTICE

To obtain the source code under GPL, LGPL, MPL and other open source licenses, that is contained in this product, please visit *http://opensource.lge.com*.
In addition to the source code, all referred license terms, warranty disclaimers and copyright notices are available for download.
LG Electronics will also provide open source code to you on CD-ROM for a charge covering the cost of performing such distribution (such as the cost of media, shipping and handling) upon email request to opensource@lge.com. This offer is valid for three (3) years from the date on which you purchased the product.

SAFETY INSTRUCTIONS

Please read these safety precautions carefully before using the product.

WARNING

- Do not place the TV and/or remote control in the following environments:
  - A location exposed to direct sunlight
  - An area with high humidity such as a bathroom
  - Near any heat source such as stoves and other devices that produce heat
  - Near kitchen counters or humidifiers where they can easily be exposed to steam or oil
  - An area exposed to rain or wind
  - Near containers of water such as vases

  Otherwise, this may result in fire, electric shock, malfunction or product deformation.



- Do not place the product where it might be exposed to dust.
  This may cause a fire hazard.



- Mains Plug is the TV connecting/ disconnecting device to AC mains electric supply. This plug must remain readily attached and operable when TV is in use.



- Do not touch the power plug with wet hands. Additionally, if the cord pin is wet or covered with dust, dry the power plug completely or wipe dust off.
  You may be electrocuted due to excess moisture.



- Make sure to connect Mains cable to compliant AC mains socket with Grounded earth pin. (Except for devices which are not grounded on earth.) Otherwise possibility you may be electrocuted or injured.



- Insert power cable plug completely into wall socket otherwise if not secured completely into socket, fire ignition may break out.



- Ensure the power cord does not come into contact with hot objects such as a heater.
  This may cause a fire or an electric shock hazard.



- Do not place a heavy object, or the product itself, on power cables. Otherwise, this may result in fire or electric shock.



- Bend antenna cable between inside and outside building to prevent rain from flowing in.
  This may cause water damaged inside the Product and could give an electric shock.



- When mounting TV onto wall make sure to neatly install and isolate cabling from rear of TV as to not create possibility of electric shock /fire hazard.



- Do not plug too many electrical devices into a single multiple electrical outlet. Otherwise, this may result in fire due to over-heating.

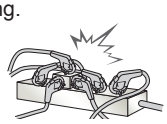

- Do not drop the product or let it fall over when connecting external devices. Otherwise, this may result in injury or damage to the product.



- Keep the anti-moisture packing material or vinyl packing out of the reach of children.
  Anti-moisture material is harmful if swallowed. If swallowed by mistake, force the patient to vomit and visit the nearest hospital. Additionally, vinyl packing can cause suffocation. Keep it out of the reach of children.



- Do not let your children climb or cling onto the TV. Otherwise, the TV may fall over, which may cause serious injury.



- Dispose of used batteries carefully to ensure that a small child does not consume them. Please seek Doctor-Medical Attention immediately if child consumes batteries.



- Do not insert any metal objects/ conductors (like a metal chopstick/ cutlery/screwdriver) between power cable plug and input Wall Socket while it is connected to the input terminal on the wall. Additionally, do not touch the power cable right after plugging into the wall input terminal. You may be electrocuted. (Depending on model)



- Do not put or store inflammable substances near the product. There is a danger of combustion/explosion or fire due to careless handling of the inflammable substances.



- Do not drop metallic objects such as coins, hair pins, chopsticks or wire into the product, or inflammable objects such as paper and matches. Children must pay particular attention. Electrical shock, fire or injury can occur. If a foreign object is dropped into the product, unplug the power cord and contact the service centre.



- Do not spray water on the product or scrub with an inflammable substance (thinner or benzene). Fire or electric shock accident can occur.



- Do not allow any impact, shock or any objects to fall into the unit, and do not drop anything onto the screen.
  You may be injured or the product can be damaged.



- Never touch this product or antenna during a thunder or lighting storm.
  You may be electrocuted.



- Never touch the wall outlet when there is leakage of gas, open the windows and ventilate.
  It may cause a fire or a burn by a spark.



- Do not disassemble, repair or modify the product at your own discretion.
  Fire or electric shock accident can occur.
  Contact the service centre for check, calibration or repair.



- If any of the following occur, unplug the product immediately and contact your local service centre.
  - The product has been impacted by shock
  - The product has been damaged
  - Foreign objects have entered the product
  - The product produced smoke or a strange smell

  This may result in fire or electric shock.



- Unplug the TV from AC mains wall socket if you do not intend to use the TV for a long period of time. Accumulated dust can cause fire hazard and insulation deterioration can cause electric leakage/ shock/fire.



- Apparatus shall not be exposed to dripping or splashing and no objects filled with liquids, such as vases, shall be placed on the apparatus.



- Do not install this product on a wall if it could be exposed to oil or oil mist.
  This may damage the product and cause it to fall.

CAUTION

- Install the product where no radio wave occurs.



- There should be enough distance between an outside antenna and power lines to keep the former from touching the latter even when the antenna falls.
  This may cause an electric shock.



- Do not install the product on places such as unstable shelves or inclined surfaces. Also avoid places where there is vibration or where the product cannot be fully supported. Otherwise, the product may fall or flip over, which may cause injury or damage to the product.



- If you install the TV on a stand, you need to take actions to prevent the product from overturning. Otherwise, the product may fall over, which may cause injury.



- If you intend to mount the product to a wall, attach VESA standard mounting interface (optional parts) to the back of the product. When you install the set to use the wall mounting bracket (optional parts), fix it carefully so as not to drop.
- Only use the attachments / accessories specified by the manufacturer.

- When installing the antenna, consult with a qualified service technician. If not installed by a qualified technician, this may create a fire hazard or an electric shock hazard.



- We recommend that you maintain a distance of at least 2 to 7 times the diagonal screen size when watching TV. If you watch TV for a long period of time, this may cause blurred vision.

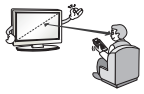

- Only use the specified type of battery. This could cause damage to the remote control.

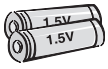

- Do not mix new batteries with old batteries. This may cause the batteries to overheat and leak.



- Batteries should not be exposed to excessive heat. For example, keep away from direct Sunlight, open fireplace and electric heaters.

- Do not place non-rechargeable batteries in charging device.

- Make sure there are no objects between the remote control and its sensor.



- Signal from Remote Control can be interrupted due to external/ internal lighting eg Sunlight, fluorescent lighting.If this occurs turn off lighting or darken viewing area.



- When connecting external devices such as video game consoles, make sure the connecting cables are long enough. Otherwise, the product may fall over, which may cause injury or damage the product.



- Do not turn the product On/Off by plugging-in or unplugging the power plug to the wall outlet. (Do not use the power plug for switch.)
  It may cause mechanical failure or could give an electric shock.



- Please follow the installation instructions below to prevent the product from overheating.
  - The distance between the product and the wall should be more than 10 cm.
  - Do not install the product in a place with no ventilation (e.g., on a bookshelf or in a cupboard).
  - Do not install the product on a carpet or cushion.
  - Make sure the air vent is not blocked by a tablecloth or curtain.

  Otherwise, this may result in fire.



- Take care not to touch the ventilation openings when watching the TV for long periods as the ventilation openings may become hot. This does not affect the operation or performance of the product.



- Periodically examine the cord of your appliance, and if its appearance indicates damage or deterioration, unplug it, discontinue use of the appliance, and have the cord replaced with an exact replacement part by an authorized servicer.

- Prevent dust collecting on the power plug pins or outlet.
  This may cause a fire hazard.



- Protect the power cord from physical or mechanical abuse, such as being twisted, kinked, pinched, closed in a door, or walked upon. Pay particular attention to plugs, wall outlets, and the point where the cord exits the appliance.



- Do not press strongly upon the panel with a hand or sharp object such as nail, pencil or pen, or make a scratch on it, as it may cause damage to screen.



- Avoid touching the screen or holding your finger(s) against it for long periods of time. Doing so may produce some temporary or permanent distortion/ damage to screen.



- When cleaning the product and its components, unplug the power first and wipe it with a soft cloth. Applying excessive force may cause scratches or discolouration. Do not spray with water or wipe with a wet cloth. Never use glass cleaner, car or industrial shiner, abrasives or wax, benzene, alcohol etc., which can damage the product and its panel. Otherwise, this may result in fire, electric shock or product damage (deformation, corrosion or breakage).



- As long as this unit is connected to the AC wall outlet, it is not disconnected from the AC power source even if you turn off this unit by SWITCH.

- When unplugging the cable, grab the plug and unplug it, by pulling at the plug. Don't pull at the cord to unplug the power cord from the power board, as this could be hazardous.

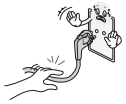

- When moving the product, make sure you turn the power off first. Then, unplug the power cables, antenna cables and all connecting cables.
  The TV set or power cord may be damaged, which may create a fire hazard or cause electric shock.



- When moving or unpacking the product, work in pairs because the product is heavy.
  Otherwise, this may result in injury.



- Contact the service centre once a year to clean the internal parts of the product. Accumulated dust can cause mechanical failure.



- Refer all servicing to qualified service personnel. Servicing is required when the apparatus has been damaged in any way, such as power supply cord or plug is damaged, liquid has been spilled or objects have fallen into the apparatus, the apparatus has been exposed to rain or moisture, does not operate normally, or has been dropped.



- If the product feels cold to the touch, there may be a small “flicker” when it is turned on. This is normal, there is nothing wrong with product.



- The panel is a high technology display product with resolution of two million to six million pixels. You may see tiny black dots and/or brightly coloured dots (red, blue or green) at a size of 1 ppm on the panel. This does not indicate a malfunction and does not affect the performance and reliability of the product. This phenomenon also occurs in third-party products and is not subject to exchange or refund.



- You may find different brightness and colour of the panel depending on your viewing position(left/right/top/down). This phenomenon occurs due to the characteristic of the panel. It is not related with the product performance, and it is not malfunction.



- Displaying a still image (e.g., broadcasting channel logo, on-screen menu, scene from a video game) for a prolonged time may cause damage to the screen, resulting in retention of the image, which is known as image sticking. The warranty does not cover the product for image sticking.
  Avoid displaying a fixed image on your television’s screen for a prolonged period (2 or more hours for LCD, 1 or more hours for Plasma).
  Also, if you watch the TV at a ratio of 4:3 for a long time, image sticking may occur on the borders of the panel.
  This phenomenon also occurs in third-party products and is not subject to exchange or refund.

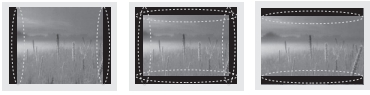

- Generated Sound
  “Cracking” noise: A cracking noise that occurs when watching or turning off the TV is generated by plastic thermal contraction due to tempera-ture and humidity. This noise is common for products where thermal deformation is required. Electrical circuit humming/panel buzzing: A low level noise is generated from a high-speed switching circuit, which supplies a large amount of current to operate a product. It varies depend-ing on the product.
  This generated sound does not affect the performance and reliability of the product.

Viewing 3D Imaging (Only 3D models)

WARNING

Viewing Environment

- Viewing Time
  - When watching 3D contents, take 5 - 15 minute breaks every hour. Viewing 3D contents for a long period of time may cause headache, dizziness, fatigue or eye strain.

Those that have a photosensitive seizure or chronic illness

- Some users may experience a seizure or other abnormal symptoms when they are exposed to a flashing light or particular pattern from 3D contents.
- Do not watch 3D videos if you feel nausea, are pregnant and/ or have a chronic illness such as epilepsy, cardiac disorder, or blood pressure disease, etc.
- 3D Contents are not recommended to those who suffer from stereo blindness or stereo anomaly. Double images or discomfort in viewing may be experienced.
- If you have strabismus (cross-eyed), amblyopia (weak eyesight) or astigmatism, you may have trouble sensing depth and easily feel fatigue due to double images. It is advised to take frequent breaks than the average adult.
- If your eyesight varies between your right and left eye, revise your eyesight prior to watching 3D contents.

Symptoms which require discontinuation or refraining from watching 3D contents

- Do not watch 3D contents when you feel fatigue from lack of sleep, overwork or drinking.
- When these symptoms are experienced, stop using/watching 3D contents and get enough rest until the symptom subsides.
  - Consult your doctor when the symptoms persist. Symptoms may include headache, eyeball pain, dizziness, nausea, palpitation, blurriness, discomfort, double image, visual inconvenience or fatigue.

CAUTION

Viewing Environment

- Viewing Distance
  - Maintain a distance of at least twice the screen diagonal length when watching 3D contents. If you feel discomfort in viewing 3D contents, move further away from the TV.

Viewing Age

- Infants/Children
  - Usage/ Viewing 3D contents for children under the age of 5 are prohibited.
  - Children under the age of 10 may overreact and become overly excited because their vision is in development (for example: trying to touch the screen or trying to jump into it. Special monitoring and extra attention is required for children watching 3D contents.
  - Children have greater binocular disparity of 3D presentations than adults because the distance between the eyes is shorter than one of adults. Therefore they will perceive more stereoscopic depth compared to adults for the same 3D image.
- Teenagers
  - Teenagers under the age of 19 may react with sensitivity due to stimulation from light in 3D contents. Advise them to refrain from watching 3D contens for a long time when they are tired.
- Elderly
  - The elderly may perceive less 3D effect compared to the youth. Do not sit closer to the TV than the recommended distance.

Cautions when using the 3D glasses

- Make sure to use LG 3D glasses. Otherwise, you may not be able to view 3D videos properly.
- Do not use 3D glasses instead of your normal glasses, sunglasses or protective goggles.
- Using modified 3D glasses may cause eye strain or image distortion.
- Do not keep your 3D glasses in extremely high or low temperatures. It will cause deformation.
- The 3D glasses are fragile and are easy to be scratched. Always use a soft, clean piece of cloth when wiping the lenses. Do not scratch the lenses of the 3D glasses with sharp objects or clean/wipe them with chemicals.

NOTE

- Image shown may differ from your TV.
- Your TV's OSD (On Screen Display) may differ slightly from that shown in this manual.
- The available menus and options may differ from the input source or product model that you are using.
- New features may be added to this TV in the future.
- The TV can be placed in standby mode in order to reduce the power consumption. And the TV should be turned off if it will not be watched for some time, as this will reduce energy consumption.
- The energy consumed during use can be significantly reduced if the level of brightness of the picture is reduced, and this will reduce the overall running cost.

ASSEMBLING AND PREPARING

Unpacking

Check your product box for the following items. If there are any missing accessories, contact the local dealer where you purchased your product. The illustrations in this manual may differ from the actual product and item.

CAUTION

- Do not use any unapproved items to ensure the safety and product life span.
- Any damages or injuries by using unapproved items are not covered by the manufacturer's warranty.
- Some models have a thin film attached on to the screen and this must not be removed.

NOTE

- The items supplied with your product may vary depending on the model.
- Product specifications or contents of this manual may be changed without prior notice due to upgrade of product functions.
- For an optimal connection, HDMI cables and USB devices should have bezels less than 10 mm thick and 18 mm width. Use an extension cable that supports USB 2.0 if the USB cable or USB memory stick does not fit into your TV's USB port.

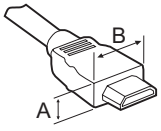

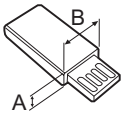

*A ≦ 10 mm

*B ≦ 18 mm

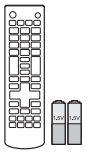

Remote control, batteries (AAA)

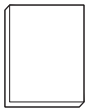

Owner's manual

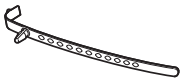

Cable Holder
1EA



Power Cord



Stand Screws
4EA, M4 x L14
(Only 39/42/47/50/55/60LB56**, 42/49/55LB55**, 42/49/55LB62**)

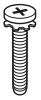

Stand Screws
4EA, M4 x L20
(Only 32LB56**, 32LB55**, 32LB62**)



Cable Managements
2EA



Wall mount spacers
2EA
(Only 42LB56**, 42LB55**, 42LB62**)



Stand Bases
(Only LB56**, LB55**, LB62**-TA)

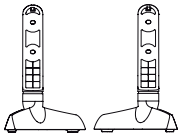

Stand Bases
(Only LB62**-TF/TE)



Cinema 3D Glasses
The number of 3D glasses may differ depending on the model or country.
(Only LB62**)

Separate purchase

Separate purchase items can be changed or modified for quality improvement without any notification. Contact your dealer to buy these items. These devices only work with certain models. The model name or design may be changed depending on the upgrade of product functions, manufacturer's circumstances or policies.

AG-F***
Cinema 3D glasses

AG-F*DP**
Dual play glasses

LG Audio Device

Compatibility	LB62**	LB56**	LB55**
AG-F*** Cinema 3D glasses	•		
AG-F*DP** Dual play glasses	•		
LG Audio Device	•	• (Except for 32LB56*B, 32LB56*D, 32LB56*Z)	• (Except for 32LB55*B, 32LB55*D, 32LB55*R, 32LB55*Z)

Parts and buttons

(Only LB56**, LB55**, LB62**-TA)

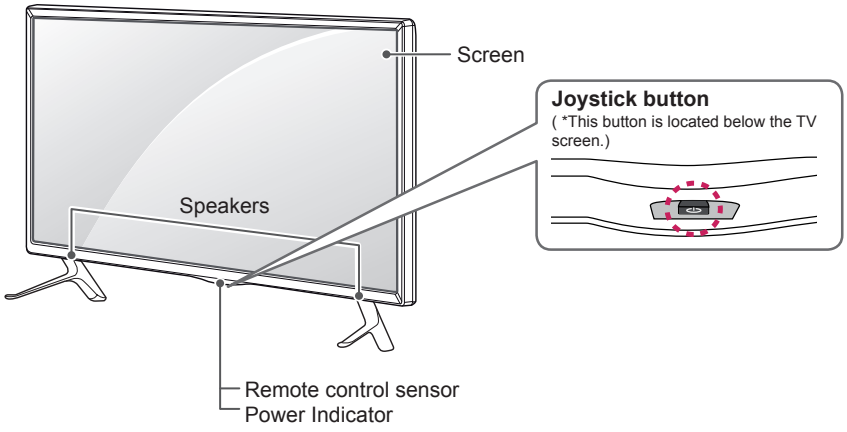

(Only LB62**-TF/TE)

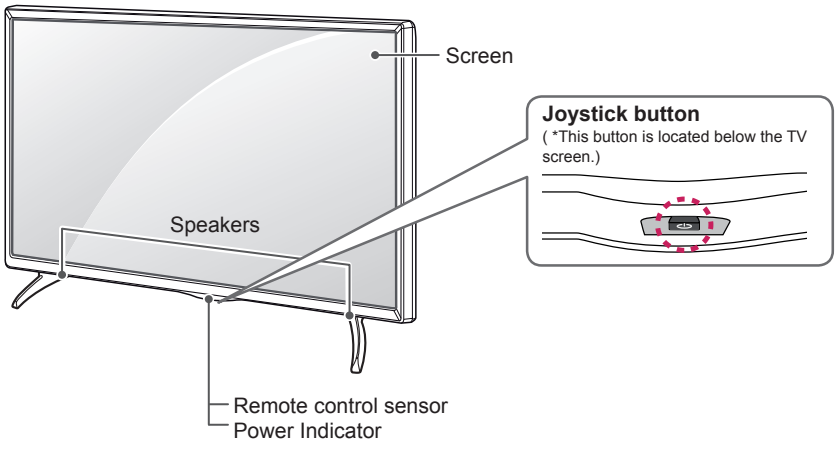

NOTE

- You can set the power indicator light to on or off by selecting **OPTION** in the main menus.

Using the Joystick button

You can simply operate the TV functions, by pressing to turn ON/OFF or sliding your finger over joystick button moving up, down, left or right.

Basic Functions

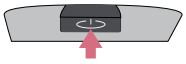	Power On	When the TV is turned off, place your finger on the joystick button and press it once and release it.
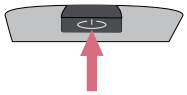	Power Off	When the TV is turned on, place your finger on the joystick button and press it once for a few seconds and release it. (However, if the Menu button is on the screen, pressing and holding the joystick button will let you exit the Menu.)
	Volume Control	If you place your finger over the joystick button and move it left or right, you can adjust the volume level you want.
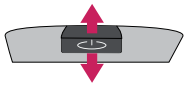	Programmes Control	If you place your finger over the joystick button and move it up or down, you can scrolls through the saved programmes you want.

NOTE

- When your finger is over the joystick button and you are sliding finger forward/back ,left or right, be careful not to press down to hard on joystick . If you press down hard on joystick button first then the adjustment of Volume level and programme scroll action will not operate.

Adjusting the Menu

When the TV is turned on, press the joystick button one time.

You can adjust the Menu items (⏻, ⚙, ✕, ⏏) moving the joystick button up, down, left or right.

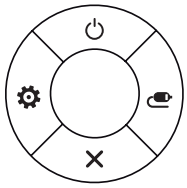	⏻	**TV Off**	Turns the power off.
	⚙	**Settings**	Accesses the main menu.
	✕	**Close**	Clears on-screen displays and returns to TV viewing.
	⏏	**Input List**	Changes the input source.

Lifting and moving the TV

Please note the following advice to prevent the TV from being scratched or damaged and for safe transportation regardless of its type and size.

CAUTION

- Avoid touching the screen at all times, as this may result in damage to the screen.

- It is recommended to move the TV in the box or packing material that the TV originally came in.
- Before moving or lifting the TV, disconnect the power cord and all cables.
- When holding the TV, the screen should face away from you to avoid damage.

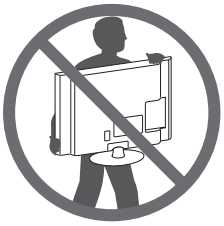

- Hold the top and bottom of the TV frame firmly. Make sure not to hold the transparent part, speaker, or speaker grill area.

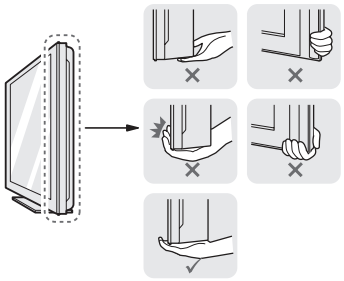

- When transporting a large TV, there should be at least 2 people.
- When transporting the TV by hand, hold the TV as shown in the following illustration.

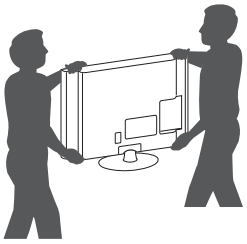

- When transporting the TV, do not expose the TV to jolts or excessive vibration.
- When transporting the TV, keep the TV upright, never turn the TV on its side or tilt towards the left or right.
- Do not apply excessive pressure to cause flexing /bending of frame chassis as it may damage screen.

ENGLISH

Setting up the TV

Image shown may differ from your TV.

Attaching the stand

(Only LB56**, LB55**, LB62**-TA)

1

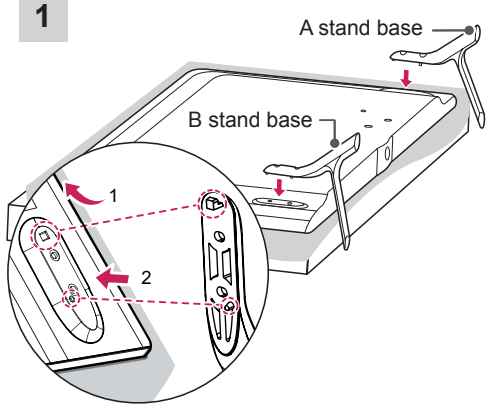

2

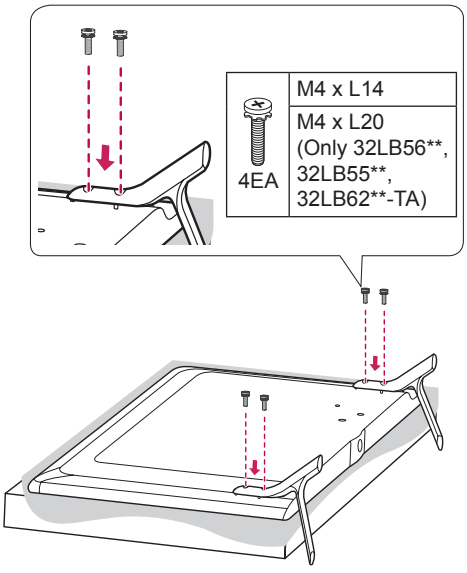

(Only LB62**-TF/TE)

1

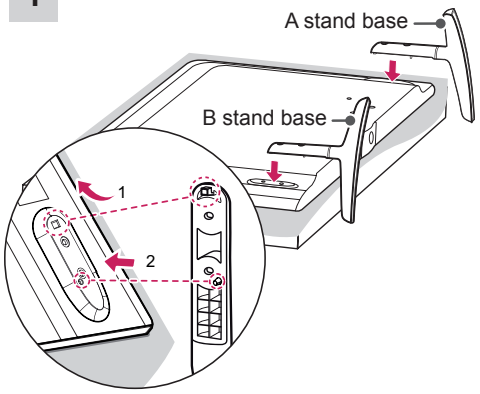

2

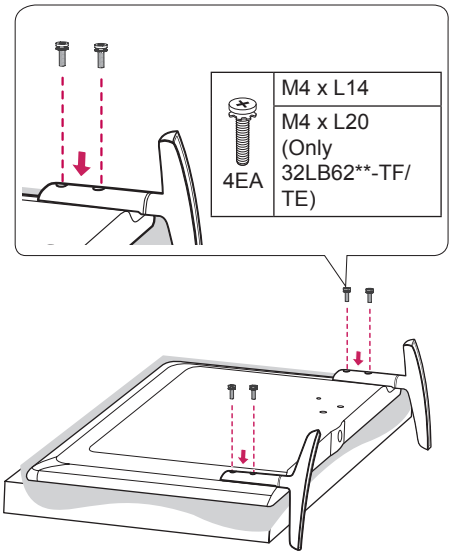

CAUTION

- When attaching the stand to the TV set, place the screen facing down on a cushioned table or flat surface to protect the screen from scratches.

Mounting on a table

1 Lift and tilt the TV into its upright position on a table.
- Leave a 10 cm (minimum) space from the wall for proper ventilation.

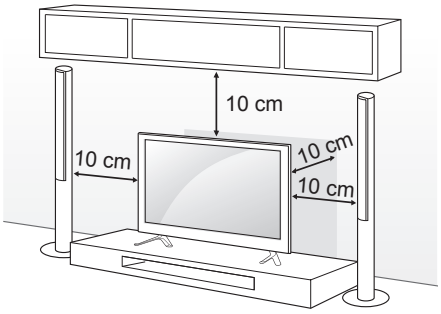

2 Connect the power cord to a wall outlet.

CAUTION

- Do not place the TV near or on sources of heat, as this may result in fire or other damage.

WARNING

- If a television is not positioned in a sufficiently stable location, it can be potentially hazardous due to falling. Many injuries, particularly to children, can be avoided by taking simple precautions such as:
  - » Using cabinets or stands recommended by the manufacturer of the television.
  - » Only using furniture that can safely support the television.
  - » Ensuring the television is not overhanging the edge of the supporting furniture.
  - » Not placing the television on tall furniture (for example, cupboards or bookcases) without anchoring both the furniture and the television to a suitable support.
  - » Not standing the televisions on cloth or other materials placed between the television and supporting furniture.
  - » Educating children about the dangers of climbing on furniture to reach the television or its controls.

Securing the TV to a wall

(This feature is not available for all models.)

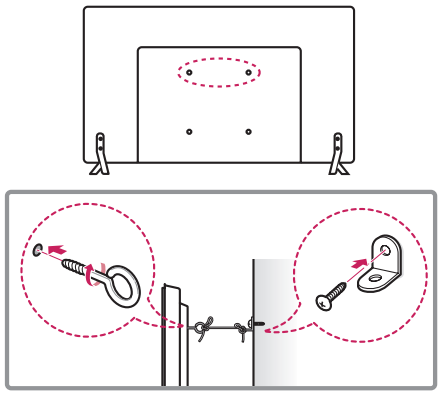

1 Insert and tighten the eye-bolts, or TV brackets and bolts on the back of the TV.
- If there are bolts inserted at the eye-bolts position, remove the bolts first.

2 Mount the wall brackets with the bolts to the wall.
Match the location of the wall bracket and the eye-bolts on the rear of the TV.

3 Connect the eye-bolts and wall brackets tightly with a sturdy rope.
Make sure to keep the rope horizontal with the flat surface.

CAUTION

- Make sure that children do not climb on or hang on the TV.

NOTE

- Use a platform or cabinet that is strong and large enough to support the TV securely.
- Brackets, bolts and ropes are not provided. You can obtain additional accessories from your local dealer.

Mounting on a wall

Attach an optional wall mount bracket at the rear of the TV carefully and install the wall mount bracket on a solid wall perpendicular to the floor. When you attach the TV to other building materials, please contact qualified personnel. LG recommends that wall mounting be performed by a qualified professional installer.

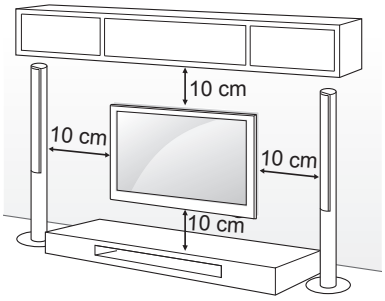

Make sure to use screws and wall mount bracket that meet the VESA standard. Standard dimensions for the wall mount kits are described in the following table.

Separate purchase(Wall Mounting Bracket)

Model	32/39LB56** 32LB55** 32LB62**	42/47/50/55LB56** 42/49/55LB55** 42/49/55LB62**
VESA (A x B)	200 x 200	400 x 400
Standard screw	M6	M6
Number of screws	4	4
Wall mount bracket	LSW240B MSW240	LSW440B MSW240

Model	60LB56**
VESA (A x B)	400 x 400
Standard screw	M6
Number of screws	4
Wall mount bracket	LSW440B

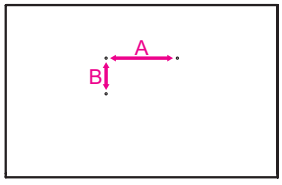

CAUTION

- Disconnect the power first, and then move or install the TV. Otherwise electric shock may occur.
- If you install the TV on a ceiling or slanted wall, it may fall and result in severe injury. Use an authorized LG wall mount and contact the local dealer or qualified personnel.
- Do not over tighten the screws as this may cause damage to the TV and void your warranty.
- Use the screws and wall mounts that meet the VESA standard. Any damages or injuries by misuse or using an improper accessory are not covered by the manufacturer's warranty.

NOTE

- Use the screws that are listed on the VESA standard screw specifications.
- The wall mount kit includes an installation manual and necessary parts.
- The wall mount bracket is not provided. You can obtain additional accessories from your local dealer.
- The length of screws may differ depending on the wall mount. Make sure to use the proper length.
- For more information, refer to the manual supplied with the wall mount.
- When attaching a wall mounting bracket to the TV, insert the wall mount spacers into the TV wall mount holes to adjust the vertical angle of the TV.
  (Only 42LB56**, 42LB55**, 42LB62**)

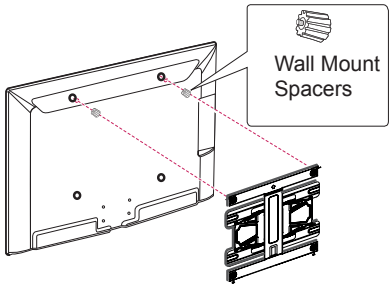

MAKING CONNECTIONS

This section on **MAKING CONNECTIONS** mainly uses diagrams for the LB5600 models.

Connect various external devices to the TV and switch input modes to select an external device. For more information of external device's connection, refer to the manual provided with each device.
Available external devices are: HD receivers, DVD players, VCRs, audio systems, USB storage devices, PC, gaming devices, and other external devices.

NOTE

- The external device connection may differ from the model.
- Connect external devices to the TV regardless of the order of the TV port.
- If you record a TV programme on a DVD recorder or VCR, make sure to connect the TV signal input cable to the TV through a DVD recorder or VCR. For more information of recording, refer to the manual provided with the connected device.
- Refer to the external equipment's manual for operating instructions.
- If you connect a gaming device to the TV, use the cable supplied with the gaming device.
- In PC mode, there may be noise associated with the resolution, vertical pattern, contrast or brightness. If noise is present, change the PC output to another resolution, change the refresh rate to another rate or adjust the brightness and contrast on the PICTURE menu until the picture is clear.
- In PC mode, some resolution settings may not work properly depending on the graphics card.

Antenna Connection

Connect the TV to a wall antenna socket with an RF cable (75 Ω).

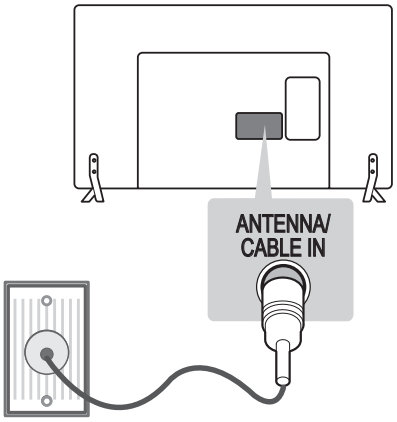

(*Not Provided)

NOTE

- Use a signal splitter to use more than 2 TVs.
- If the image quality is poor, install a signal amplifier properly to improve the image quality.
- If the image quality is poor with an antenna connected, try to realign the antenna in the correct direction.
- An antenna cable and converter are not supplied.
- Supported DTV Audio: MPEG, Dolby Digital, Dolby Digital Plus, HE-AAC

Other Connections

Connect your TV to external devices. For the best picture and audio quality, connect the external device and the TV with the HDMI cable as shown. Some separate cable is not provided.

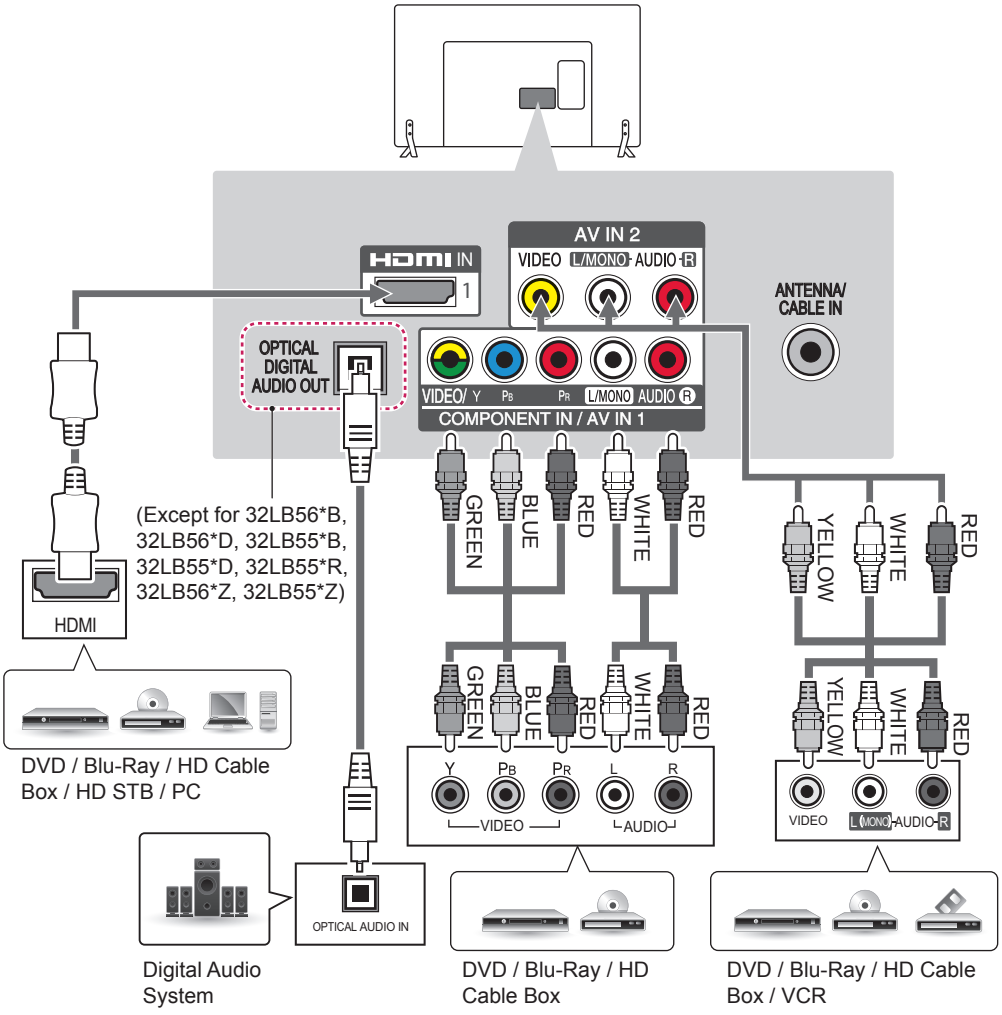

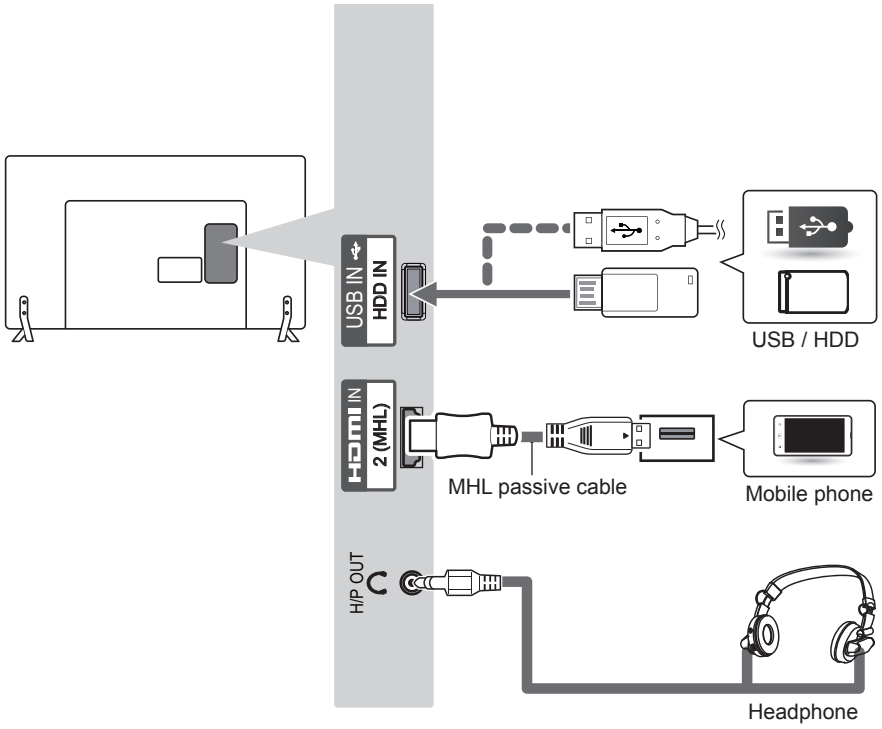
USB IN
HDD IN
USB / HDD
HDMI IN
2 (MHL)
MHL passive cable
Mobile phone
H/P OUT
Headphone

ENGLISH

REMOTE CONTROL

The descriptions in this manual are based on the buttons on the remote control. Please read this manual carefully and use the TV correctly. To replace batteries, open the battery cover, replace batteries (1.5 V AAA) matching the ⊕ and ⊖ ends to the label inside the compartment, and close the battery cover. To remove the batteries, perform the installation actions in reverse.

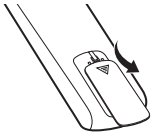

CAUTION

- Do not mix old and new batteries, as this may damage the remote control.
- In Analogue TV and some countries, some remote control buttons may not work.

Make sure to point the remote control toward the remote control sensor on the TV.
(Only LB56**, LB55**) (Except for India)

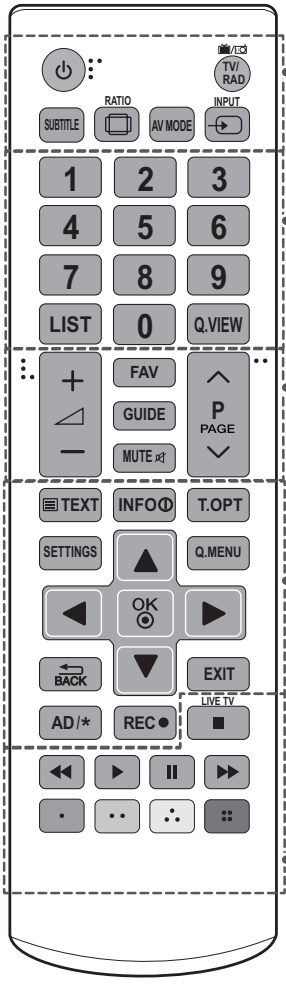

(POWER) Turns the TV on or off.
TV/RAD Selects Radio, TV and DTV programme.
SUBTITLE Recalls your preferred subtitle in digital mode.
RATIO Resizes an image.
AV MODE Selects an AV mode.
INPUT Changes the input source.

Number buttons Enters numbers.
LIST Accesses the saved programme list.
Q.VIEW Returns to the previously viewed programme.

FAV Accesses your favourite programme list.
GUIDE Shows programme guide.
MUTE Mutes all sounds.
+ − Adjusts the volume level.
∧ **P** ∨ Scrolls through the saved programmes.
∧ **PAGE** ∨ Moves to the previous or next screen.

Teletext buttons (TEXT, T.OPT) These buttons are used for teletext.
INFO Views the information of the current programme and screen.
SETTINGS Accesses the main menus.
Q.MENU Accesses the Quick menus.
Navigation buttons (up/down/left/right) Scrolls through menus or options.
OK Selects menus or options and confirms your input.
BACK Returns to the previous level.
EXIT Clears on-screen displays and returns to TV viewing.
AD/* By Pressing AD button, audio descriptions function will be enabled. (Depending on model)
REC ● Starts to record and displays record menu.
(Only Time Machine supported model)

LIVE TV Returns to LIVE TV.
Control buttons (■, ▶, II, ◀◀, ▶▶) Controls the MY MEDIA menus, Time Machine control or the SIMPLINK compatible devices (USB, SIMPLINK or Time Machine).
Coloured buttons These access special functions in some menus.
(: Red, : Green, : Yellow, : Blue)

(Only LB56**, LB55**) (Only India)

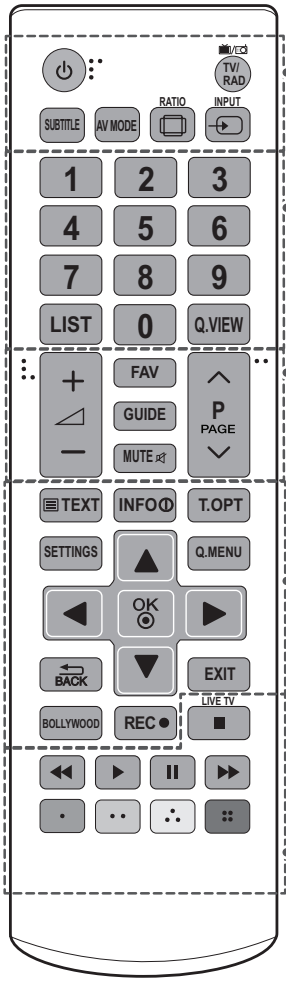

(POWER) Turns the TV on or off.
TV/RAD Selects Radio, TV and DTV programme.
SUBTITLE Recalls your preferred subtitle in digital mode.
AV MODE Selects an AV mode.
RATIO Resizes an image.
INPUT Changes the input source.

Number buttons Enters numbers.
LIST Accesses the saved programme list.
Q.VIEW Returns to the previously viewed programme.

FAV Accesses your favourite programme list.
GUIDE Shows programme guide.
MUTE Mutes all sounds.
+ − Adjusts the volume level.
∧ **P** ∨ Scrolls through the saved programmes.
∧ **PAGE** ∨ Moves to the previous or next screen.

Teletext buttons (TEXT, T.OPT) These buttons are used for teletext.
INFO Views the information of the current programme and screen.
SETTINGS Accesses the main menus.
Q.MENU Accesses the Quick menus.
Navigation buttons (up/down/left/right) Scrolls through menus or options.
OK Selects menus or options and confirms your input.
BACK Returns to the previous level.
EXIT Clears on-screen displays and returns to TV viewing.
BOLLYWOOD Switches the BOLLYWOOD sound mode.
REC ● Starts to record and displays record menu.
(Only Time Machine supported model)

LIVE TV Returns to LIVE TV.
Control buttons (■, ▶, ❚❚, ◀◀, ▶▶) Controls the MY MEDIA menus, Time Machine control or the SIMPLINK compatible devices (USB, SIMPLINK or Time Machine).
Coloured buttons These access special functions in some menus.
(: Red, : Green, : Yellow, : Blue)

(Only LB62**) (Except for India)

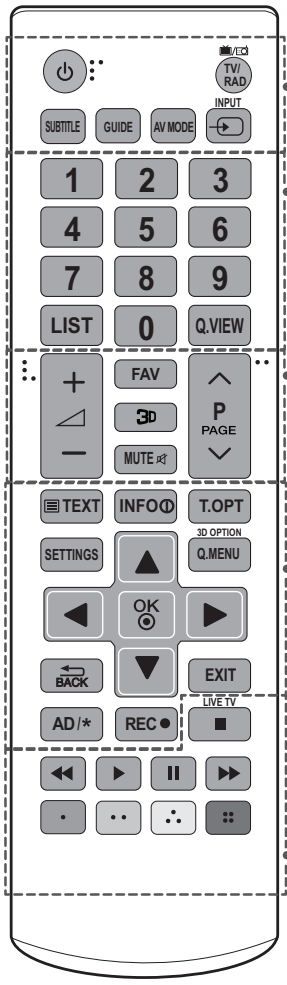

(POWER) Turns the TV on or off.
TV/RAD Selects Radio, TV and DTV programme.
SUBTITLE Recalls your preferred subtitle in digital mode.
GUIDE Shows programme guide.
AV MODE Selects an AV mode.
INPUT Changes the input source.

Number buttons Enters numbers.
LIST Accesses the saved programme list.
Q.VIEW Returns to the previously viewed programme.

FAV Accesses your favourite programme list.
3D Used for viewing 3D video.
MUTE Mutes all sounds.
+ − Adjusts the volume level.
∧ **P** ∨ Scrolls through the saved programmes.
∧ **PAGE** ∨ Moves to the previous or next screen.

Teletext buttons (TEXT, T.OPT) These buttons are used for teletext.
INFO Views the information of the current programme and screen.
SETTINGS Accesses the main menus.
3D OPTION Use this to view 3D video.
Q.MENU Accesses the Quick menus.
Navigation buttons (up/down/left/right) Scrolls through menus or options.
OK Selects menus or options and confirms your input.
BACK Returns to the previous level.
EXIT Clears on-screen displays and returns to TV viewing.
AD/* By pressing the AD button, audio descriptions function will be enabled. (Depending on model)
REC ● Starts to record and displays record menu.
(Only Time Machine supported model)

LIVE TV Returns to LIVE TV.
Control buttons (■, ▶, ❚❚, ◀◀, ▶▶) Controls the MY MEDIA menus, Time Machine control or the SIMPLINK compatible devices (USB, SIMPLINK or Time Machine).
Coloured buttons These access special functions in some menus.
(: Red, : Green, : Yellow, : Blue)

(Only LB62**) (Only India)

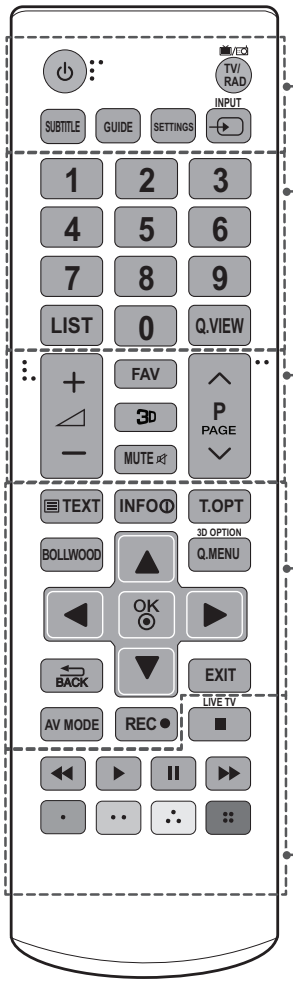

(POWER) Turns the TV on or off.
TV/RAD Selects Radio, TV and DTV programme.
SUBTITLE Recalls your preferred subtitle in digital mode.
GUIDE Shows programme guide.
SETTINGS Accesses the main menus.
INPUT Changes the input source.

Number buttons Enters numbers.
LIST Accesses the saved programme list.
Q.VIEW Returns to the previously viewed programme.

FAV Accesses your favourite programme list.
3D Used for viewing 3D video.
MUTE Mutes all sounds.
+ − Adjusts the volume level.
∧ **P** ∨ Scrolls through the saved programmes.
∧ **PAGE** ∨ Moves to the previous or next screen.

Teletext buttons (TEXT, T.OPT) These buttons are used for teletext.
INFO Views the information of the current programme and screen.
BOLLYWOOD Switches the BOLLYWOOD sound mode.
3D OPTION Use this to view 3D video.
Q.MENU Accesses the Quick menus.
Navigation buttons (up/down/left/right) Scrolls through menus or options.
OK Selects menus or options and confirms your input.
BACK Returns to the previous level.
EXIT Clears on-screen displays and returns to TV viewing.
AV MODE Selects an AV mode.
REC ● Starts to record and displays record menu.
(Only Time Machine supported model)

LIVE TV Returns to LIVE TV.
Control buttons (■, ▶, ❚❚, ◀◀, ▶▶) Controls the MY MEDIA menus, Time Machine control or the SIMPLINK compatible devices (USB, SIMPLINK or Time Machine).
Coloured buttons These access special functions in some menus.
(: Red, : Green, : Yellow, : Blue)

SETTINGS

Automatically Setting Up Programme

SETTINGS ⇨SETUP ⇨Auto Tuning

Automatically tunes the programmes.

- If Input Source is not connected properly, programme registration may not work.
- **Auto Tuning** only finds programmes that are currently broadcasting.
- If **Lock System** is turned on, a pop-up window will appear asking for password.

To adjust picture with Picture Wizard

SETTINGS ⇨PICTURE ⇨Picture Wizard III

[Depending on model]
Calibrates and adjusts for optimum picture quality using the remote control and the Picture Wizard without expensive pattern devices or help from a specialist.

To select Picture Mode

SETTINGS ⇨PICTURE ⇨Picture Mode

Select the picture mode optimized for the viewing environment or the programme.

- **Vivid** : Heightens contrast, brightness and sharpness to display vivid images.
- **Standard** : Displays images in standard levels of contrast, brightness and sharpness.
- **Eco/APS** : [Depending on model]
  The Energy Saver feature changes settings on the TV to reduce power consumption.
- **Cinema/Game** : Displays the optimum picture for movie, game.
- **Soccer** : [Depending on model] Optimised picture mode for football matches. The pitch and kits are presented in vibrant colours, with crystal-clear images even for fast movements.
- **Expert** : Menu for adjusting picture quality that allows experts and amateurs to enjoy the best TV viewing. This is the adjustment menu provided for ISF-certified picture tuning professionals. (ISF logo can only be used on ISF-certified TVs.)
  ISFccc: Imaging Science Foundation Certified Calibration Control
- Depending on input signal, available range of picture modes may differ.
- **Expert** mode is for picture tuning professionals to control and fine-tune using a specific image. For normal images, the effects may not be dramatic.
- The ISF function is only available on some models.

To set advanced control

SETTINGS ⇨PICTURE ⇨Picture Mode ⇨Advanced Control / Expert Control

Calibrates the screen for each picture mode; or adjusts picture settings for a special screen. First select a **Picture Mode** of your choice.

- **Dynamic Contrast** : Adjusts the contrast to the optimal level according to the brightness of the image.
- **Dynamic Colour** : Adjusts colours to make the image appear in more natural colours.
- **Skin Colour** : Sets Skin colour spectrum separately to implement the skin colour as defined by the user.
- **Sky Colour** : Sky colour is set separately.
- **Grass Colour** : Natural colour spectrum (meadows, hills, etc.) can be separately set.
- **Gamma** : Sets the gradation curve according to the output of picture signal in relation to the input signal.
- **Colour Gamut** : Selects the range of colours that can be expressed.
- **Edge Enhancer** : Shows clearer and distinctive yet natural edges of the video.
- **Expert Pattern** : [Depending on model]
  Patterns used for expert adjustment.
- **Colour Filter** : Filters a specific colour spectrum in RGB colours to fine-tune colour saturation and hue accurately.

- **Colour Temperature** : Adjusts the overall tone of the screen as desired. In Expert mode, detailed fine-tuning can be set via Gamma method, etc.
- **Colour Management System** : This is a system that experts use when they adjust colour with a test pattern. They can select from six colour areas (Red / Green / Blue / Cyan / Magenta / Yellow) without affecting other colours. For normal images, adjustments may not result in noticeable colour changes.
- Depending on input signal or other picture settings, the range of detailed items for adjustment may differ.

To set additional picture options

SETTINGS ⇨PICTURE ⇨Picture Mode ⇨Picture Option

[Depending on model]
Adjusts detailed setting for images.

- **Noise Reduction** : Eliminates noise in the picture.
- **MPEG Noise Reduction** : Eliminates noise generated while creating digital picture signals.
- **Black Level** : Adjusts the brightness and contrast of the screen to suit the black level of the input picture by using the blackness (black level) of the screen.
- **Real Cinema** : Optimizes the screen for movie viewing.
- **Motion Eye Care / SUPER Energy Saving** : [Depending on model] Saves power consumption by adjusting the brightness corresponding to the movement of the image on the screen.
- Depending on input signal or other picture settings, the range of detailed items for adjustment may differ.

To use TruMotion

SETTINGS ⇨PICTURE ⇨TruMotion

[Depending on model]
Corrects images to display smoother motion sequences.

- **Smooth** : De-judder/De-blur working on higher range in auto mode.
- **Clear** : De-judder/De-blur working on middle range in auto mode.
- **User** : De-judder / De-blur can be set manually.
  De-judder : This function adjusts juddering of the screen.
  De-blur : This function adjusts and eliminates blurring of the screen.

Auto means Juddering and blurring range that depend on input video status is controlled by TruMotion mode.

To use Energy Saving feature

SETTINGS ⇨PICTURE ⇨Energy Saving

Reduces power consumption by adjusting screen brightness.

- **Auto** : [Depending on model]
  The TV sensor detects the ambient lighting and automatically adjusts the screen brightness.
- **Off** : Turns off the Energy Saving mode.
- **Minimum / Medium / Maximum** : Applies the pre-set Energy Saving mode.
- **Screen Off** : Screen is turned off and only sound is played. Press any button except Power button on the remote control to turn the screen back on.

To use TV speaker

SETTINGS ⇨AUDIO ⇨Sound Out ⇨TV Speaker

[Depending on model]
Sound is output through the TV speaker.

To use External Speaker

SETTINGS ⇨AUDIO ⇨Sound Out ⇨External Speaker (Optical)

[Depending on model]
Sound is output through the speaker connected to the optical port.

- SimpLink is supported.

To use Digital Sound Out

SETTINGS ⇨AUDIO ⇨Sound Out ⇨External Speaker (Optical) ⇨Digital Sound Out

[Depending on model]
Sets up Digital Sound Out.

Item	Audio Input	Digital Audio Ouput
Auto	MPEG Dolby Digital Dolby Digital Plus HE-AAC	PCM Dolby Digital Dolby Digital Dolby Digital
PCM	All	PCM

To connect and use LG audio device

SETTINGS ⇨AUDIO ⇨Sound Out ⇨LG Sound Sync (Optical)

[Depending on model]
Connect LG audio device with the Sound Sync logo to the optical digital audio output port. LG audio device allows you to enjoy rich powerful sound easily.

To use Headphone

SETTINGS ⇨AUDIO ⇨Sound Out ⇨Headphone

[Depending on model]
Sound is output through the headphone connected to the earphone/headphone port.

To synchronize audio and video

SETTINGS ⇨AUDIO ⇨AV Sync. Adjust

[Depending on model]
Synchronizes video and audio directly when they do not match.

- If you set **AV Sync. Adjust** to **ON**, you can adjust the sound output (TV speakers or SPDIF) to the screen image.

To use SIMPLINK

[Depending on model]
SIMPLINK is a feature that enables you to control and manage various multimedia devices conveniently via the SIMPLINK menu.

1 Connect the TV's **HDMI IN** terminal and the SIMPLINK device's HDMI output terminal using an HDMI cable.
- [Depending on model]
  For home theatre units with a SIMPLINK function, connect HDMI terminals as above, and use an optical cable to connect Optical Digital Audio Out from the TV to Optical Digital Audio In of the SIMPLINK device.

2 Select **INPUT(OPTION) ⇨ SIMPLINK.** SIMPLINK menu window appears.

3 In SIMPLINK Setting window, set SIMPLINK function to **ON**.

4 In SIMPLINK menu window, selects the device you want to control.
- This function is only compatible with devices with the SIMPLINK logo.
- To use the SIMPLINK function, you need to use a high-speed HDMI® cable (with CEC (Consumer Electronics Control) feature added). High-speed HDMI® cables have the No. 13 pin connected for information exchange between devices.
- If you switch to another input, the SIMPLINK device will stop.

- If a third-party device with the HDMI-CEC function is also used, the SIMPLINK device may not work normally.
- [Depending on model]
  If you select or play media from a the device with a home theatre function, the **HT Speaker(Speaker)** is automatically connected.
  Be sure to connect with an optical cable (sold separately) to use the **HT Speaker(Speaker)** function.

SIMPLINK function description

- **Direct Play** : Plays the multimedia device on the TV instantly.
- **Select multimedia device** : Selects the desired device via the SIMPLINK menu to control it from the TV screen instantly.
- **Disc playback** : Manages the multimedia device with the TV remote control.
- **Power off all devices** : When you power off the TV, all connected devices are turned off.
- **Sync Power on** : When the equipment with SIMPLINK function connected HDMI terminal starts to play, the TV will automatically turn on.
- **Speaker** : [Depending on model]
  Select speaker either on the home theatre unit or the TV.

To set password

SETTINGS ⇨LOCK ⇨Set Password

Sets or changes the TV password.
The initial password is set to ‘0000’.

To return Factory Reset

SETTINGS ⇨ OPTION ⇨Factory Reset

All stored information is deleted and TV settings are reset.
The TV turns itself off and back on, and all settings are reset.

- When **Lock System** is in place, a pop-up window appears and asks for password
- Do not turn off the power during initialization.

To remove the USB device

Q.MENU ⇨USB Device

Select a USB storage device that you want to remove.
When you see a message that the USB device has been removed, separate the device from the TV.

- Once a USB device has been selected for removal, it can no longer be read. Remove the USB storage device and then re-connect it.

Using a USB storage device - warning

- If the USB storage device has a built-in auto recognition program or uses its own driver, it may not work.
- Some USB storage devices may not work or may work incorrectly.
- Use only USB storage devices formatted with the Windows FAT32 or NTFS File System.
- For external USB HDDs, it is recommended that you use devices with a rated voltage of less than 5 V and a rated current of less than 500 mA.
- It is recommended that you use USB memory sticks of 32 GB or less and USB HDDs of 1 TB or less.
- If a USB HDD with power-saving function does not work properly, turn the power off and on. For more information, refer to the user manual of the USB HDD.
- Data in the USB storage device can be damaged, so be sure to back up important files to other devices. Data maintenance is the user’s responsibility and the manufacturer is not responsible for data loss.

My Media supporting file

- Maximum data transfer rate : 20 Mbps (Mega bit per second)
- External supported subtitle formats : *.srt (SubRip), *.smi (SAMI), *.sub (SubViewer, MicroDVD, DVDsubtitleSystem, SubIdx(Vobsub)), *.ass/*.ssa (SubStation Alpha), *.txt (TMplayer), *.psb (PowerDivX)
- Internal supported subtitle formats: XSUB (Supports internal subtitles generated from DivX6)

Supported Video Formats

- Maximum: 1920 x 1080 @ 30p (only Motion JPEG 640 x 480 @ 30p)
- .asf, .wmv
  [Video] MPEG-2, MPEG-4 Part2, DivX3.11, DivX4, DivX5, DivX6, XViD, H.264/AVC, VC1(WMV3, WVC1), MP43
  [Audio] WMA Standard, WMA9(Pro), MP3, AAC, AC3, MP3, 3D WMV Single Stream
- .divx, .avi
  [Video] MPEG-2, MPEG-4 Part2, DivX3.11, DivX4, DivX5, DivX6, XViD, H.264/AVC
  [Audio] HE-AAC, LPCM, ADPCM, MPEG-1 Layer I, MPEG-1 Layer II, Dolby Digital, MPEG-1 Layer III (MP3), *DTS
- .ts, .trp, .tp, .mts, .m2ts
  [Video] H.264/AVC, MPEG-2, AVS, VC1
  [Audio] MPEG-1 Layer I, MPEG-1 Layer II, MPEG-1 Layer III (MP3), Dolby Digital, Dolby Digital Plus, AAC, HE-AAC, *DTS
- .vob
  [Video] MPEG-1, MPEG-2
  [Audio] Dolby Digital, MPEG-1 Layer I, MPEG- 1 Layer II, DVD-LPCM
- .mp4, .m4v, .mov
  [Video] MPEG-2, MPEG-4 Part2, DivX3.11, DivX4, DivX5, DivX6, XVID, H.264/AVC
  [Audio] AAC, MPEG-1 Layer III (MP3), *DTS
- .mkv
  [Video] MPEG-2, MPEG-4 Part2, DivX3.11, DivX4, DivX5, DivX6, XVID, H.264/AVC
  [Audio] HE-AAC, Dolby Digital, MPEG-1 Layer III (MP3), *DTS, LPCM
- motion JPEG
  [Video] MJPEG
  [Audio] LPCM, ADPCM
- .mpg, .mpeg, .mpe
  [Video] MPEG-1, MPEG-2
  [Audio] MPEG-1 Layer I, MPEG-1 Layer II, Dolby Digital, LPCM
- dat
  [Video] MPEG-1, MPEG-2
  [Audio] MP2
- flv
  [Video] Sorenson H.263, H.264/AVC
  [Audio] MP3, AAC, HE-AAC
- *rm, *rmvb
  [Video] RV30, RV40
  [Audio] Dolby Digital, AAC, HE-AAC, RA6(Cook)
- 3gp, 3gp2
  [Video] H.264/AVC, MPEG-4 Part2
  [Audio] AAC, AMR(NB/WB)

*DTS / *rm / *rmvb : Depending on model

Supported Audio Formats

- File type : mp3
  [Bit rate] 32 Kbps - 320 Kbps
  [Sample freq.] 16 kHz - 48 kHz
  [Support] MPEG1, MPEG2, Layer2, Layer3
- File Type : AAC
  [Bit rate] Free Format
  [Sample freq.] 8 kHz ~ 48 kHz
  [Support] ADIF, ADTS
- File Type : M4A
  [Bit rate] Free Format
  [Sample freq.] 8 kHz ~ 48 kHz
  [Support] MPEG-4
- File Type : WMA
  [Bit rate] 128 Kbps ~ 320 Kbps
  [Sample freq.] 8 kHz ~ 48 kHz
  [Support] WMA7, WMA8, WMA9 Standard
- File Type : WMA
  [Bit rate] ~ 768 Kbps
  [Channel / Sample freq.]
  M0 : up to 2 Channel @ 48 kHz (Except LBR mode),
  M1 : up to 5.1 Channel @ 48 kHz,
  M2 : up to 5.1 Channel @ 96 kHz
  [Support] WMA 10 Pro
- File Type : OGG
  [Bit rate] Free Format
  [Sample freq.] ~ 48 kHz
  [Support] OGG Vorvis

Supported Photo Formats

- Category : 2D (jpeg, jpg, jpe)
  [Available file type] SOF0: Baseline,
  SOF1 : Extend Sequential,
  SOF2 : Progressive
  [Photo size] Minimum : 64 x 64,
  Maximum : Normal Type: 15360 (W) x 8640 (H), Progressive Type : 1920 (W) x 1440 (H)
- Category : BMP
  [Photo size] Minimum : 64 x 64, Maximum : 9600 x 6400
- Category : PNG
  [Available file type] Interlace, Non-Interlace
  [Photo size] Minimum : 64 x 64, Maximum : Interlace : 1200 x 800, Non-Interlace : 9600 x 6400
- BMP and PNG format files may be slower to display than JPEG.

TO SEE WEB MANUAL

To obtain detailed User Guide information, please visit *www.lg.com*.

EXTERNAL CONTROL DEVICE SETUP

To obtain the external control device setup information, please visit *www.lg.com.*

MAINTENANCE

Cleaning your TV

Clean your TV regularly to keep the best performance and to extend the product lifespan.

CAUTION

- Make sure to turn the power off and disconnect the power cord and all other cables first.
- When the TV is left unattended and unused for a long time, disconnect the power cord from the wall outlet to prevent possible damage from lightning or power surges.

Screen, frame, cabinet and stand

- To remove dust or light dirt, wipe the surface with a dry, clean, and soft cloth.
- To remove major dirt, wipe the surface with a soft cloth dampened in clean water or a diluted mild detergent. Then wipe immediately with a dry cloth.

CAUTION

- Avoid touching the screen at all times, as this may result in damage to the screen.
- Do not push, rub, or hit the screen surface with your fingernail or a sharp object, as this may result in scratches and image distortions.
- Do not use any chemicals as this may damage the product.
- Do not spray liquid onto the surface. If water enters the TV, it may result in fire, electric shock, or malfunction.

Power cord

Remove the accumulated dust or dirt on the power cord regularly.

TROUBLESHOOTING

Problem	Solution
Cannot control the TV with the remote control.	• Check the remote control sensor on the product and try again. • Check if there is any obstacle between the product and the remote control. • Check if the batteries are still working and properly installed (⊕ to ⊕, ⊖ to ⊖).
No image display and no sound is produced.	• Check if the product is turned on. • Check if the power cord is connected to a wall outlet. • Check if there is a problem in the wall outlet by connecting other products.
The TV turns off suddenly.	• Check the power control settings. The power supply may be interrupted. • Check if the **Sleep Timer** or **Off Time** feature is activated in the **TIME** settings. • If there is no signal while the TV is on, the TV will turn off automatically after 15 minutes of inactivity.
When connecting to the PC (HDMI), 'No signal' or 'Invalid Format' is displayed.	• Turn the TV off/on using the remote control. • Reconnect the HDMI cable. • Restart the PC with the TV on.

ENGLISH

ENVIRONMENTAL INFORMATION

(Only India)

WEEE



Disposal of your old appliance

1. When this crossed-out wheeled bin symbol is attached to a product it means the product is covered by the e-waste (Management and Handling) Rules, 2011.
2. All electrical and electronic products should be disposed of separately from the municipal waste stream via designated collection facilities appointed by the government or the local authorities.
3. The correct disposal of your old appliance will help prevent potential negative consequences for the environment and human health.
4. For more detailed information about disposal of your old appliance, please contact your city office, waste disposal service or the shop where you purchased the product.
5. This product does not contain any of the hazardous substances as specified in the rule 13 (1) and (2) of the e-waste (Management and Handling) Rules, 2011.

पर्यावरणीय जानकारी

WEEE



अपने पुराने उपकरण का निपटान

१. जब यह काटे गये पहिये वाले बिन का चिह्न किसी उत्पाद के साथ संलग्न होता है तो इसका अर्थ है उत्पाद ई–अपशिष्ट (प्रबंधन और हथालन) नियम २०११ के अंतर्गत सम्मिलित किया गया है।

२. सभी इलेक्ट्रिकल एवं और इलेक्ट्रानिक उत्पादों को सरकार या स्थानीय अधिकारियों द्वारा नियुक्त नगरपालिका अपशिष्ट धारा से अलग प्राधिकृत की गई संग्रह सुविधाओं के माध्यम से निपटाया जाना चाहिए।

३. सही तरीके से अपने पुराने उपकरणों का निपटान वातावरण और मानवीय स्वास्थ्य के लिए संभावित नकारात्मक परिणामों को रोकने में मदद करेगा।

४. अपने पुराने उपकरणों के निपटान के संबध में और अधिक विसतृत जानकारी के लिए, कृपया अपने नगर कार्यालय, अपशिष्ट निपटान सेवा या जहां से आपने उत्पाद खरीदा था, वहां संपर्क करें।

५. इस उत्पाद में ई–अपशिष्ट(प्रबंधन और हथालन) नियम, २०११ के नियम १३ (१) और (२) में निर्देशानुसार कोई भी हानिकारक पदार्थ भामिल नहीं है।

SPECIFICATIONS

Product specifications may be changed without prior notice due to upgrade of product functions.
For the power supply and power consumption, refer to the label attached to the product.

MODELS		**32LB56****	**39LB56****	**42LB56****
		32LB5600-TA 32LB560T-TA 32LB560B-TA 32LB560D-TA 32LB560Y-TA 32LB560Z-TA 32LB565B-TA 32LB5610-TC 32LB561T-TC 32LB561B-TC 32LB561D-TC 32LB5630-TD 32LB563T-TD 32LB563B-TD 32LB563D-TD 32LB561Y-TC 32LB561Z-TC 32LB563Y-TD 32LB563Z-TD 32LB5650-TO	39LB5600-TA 39LB560T-TA 39LB560B-TA 39LB560D-TA 39LB560Y-TA 39LB560Z-TA 39LB565B-TA 39LB5610-TC 39LB561T-TC 39LB561B-TC 39LB561D-TC 39LB5630-TD 39LB563T-TD 39LB563B-TD 39LB563D-TD 39LB561Y-TC 39LB561Z-TC 39LB563Y-TD 39LB563Z-TD 39LB5650-TO	42LB5600-TA 42LB560T-TA 42LB560B-TA 42LB560D-TA 42LB560Y-TA 42LB560Z-TA 42LB565B-TA 42LB5610-TC 42LB561T-TC 42LB561B-TC 42LB561D-TC 42LB5630-TD 42LB563T-TD 42LB563B-TD 42LB563D-TD 42LB561Y-TC 42LB561Z-TC 42LB563Y-TD 42LB563Z-TD 42LB5650-TO
Dimensions (W x H x D)	With stand (mm)	732 x 481 x 207	885 x 567 x 218	961 x 610 x 218
	Without stand(mm)	732 x 431 x 55.5	885 x 524 x 55.5	961 x 567 x 55.5
Weight	With stand (kg)	6.2	8.3	9.5
	Without stand (kg)	6.0	8	9.2
Power requirement		AC 100-240 V~ 50 / 60 Hz	AC 100-240 V~ 50 / 60 Hz	AC 100-240 V~ 50 / 60 Hz
MODELS		**47LB56****	**50LB56****	**55LB56****
		47LB5600-TA 47LB560T-TA 47LB560B-TA 47LB560D-TA 47LB560Y-TA 47LB560Z-TA 47LB565B-TA 47LB5610-TC 47LB561T-TC 47LB561B-TC 47LB561D-TC 47LB5630-TD 47LB563T-TD 47LB563B-TD 47LB563D-TD 47LB561Y-TC 47LB561Z-TC 47LB563Y-TD 47LB563Z-TD 47LB5650-TO	50LB5600-TA 50LB560T-TA 50LB560B-TA 50LB560D-TA 50LB560Y-TA 50LB560Z-TA 50LB565B-TA 50LB5610-TC 50LB561T-TC 50LB561B-TC 50LB561D-TC 50LB5630-TD 50LB563T-TD 50LB563B-TD 50LB563D-TD 50LB561Y-TC 50LB561Z-TC 50LB563Y-TD 50LB563Z-TD 50LB5650-TO	55LB5600-TA 55LB560T-TA 55LB560B-TA 55LB560D-TA 55LB560Y-TA 55LB560Z-TA 55LB565B-TA 55LB5610-TC 55LB561T-TC 55LB561B-TC 55LB561D-TC 55LB5630-TD 55LB563T-TD 55LB563B-TD 55LB563D-TD 55LB561Y-TC 55LB561Z-TC 55LB563Y-TD 55LB563Z-TD 55LB5650-TO
Dimensions (W x H x D)	With stand (mm)	1073 x 676 x 255	1128 x 708 x 255	1243 x 772 x 255
	Without stand(mm)	1073 x 629 x 55.8	1128 x 660 x 55.8	1243 x 725 x 56.8
Weight	With stand (kg)	12.7	14.2	18.4
	Without stand (kg)	12.3	13.8	18
Power requirement		AC 100-240 V~ 50 / 60 Hz	AC 100-240 V~ 50 / 60 Hz	AC 100-240 V~ 50 / 60 Hz

MODELS		60LB56**	32LB55**	42LB55**
		60LB5600-TA 60LB560T-TA 60LB560B-TA 60LB560D-TA 60LB560Y-TA 60LB560Z-TA 60LB565B-TA 60LB5610-TC 60LB561T-TC 60LB561B-TC 60LB561D-TC 60LB5630-TD 60LB563T-TD 60LB563B-TD 60LB563D-TD 60LB561Y-TC 60LB561Z-TC 60LB563Y-TD 60LB563Z-TD 60LB5650-TO	32LB5500-TA 32LB550Z-TA 32LB550D-TA 32LB550B-TA 32LB550T-TA 32LB550Y-TA 32LB5510-TC 32LB551T-TC 32LB551B-TC 32LB551D-TC 32LB552R-TB 32LB552R-TC 32LB551Y-TC 32LB551Z-TC	42LB5500-TA 42LB550Z-TA 42LB550D-TA 42LB550B-TA 42LB550T-TA 42LB550Y-TA 42LB5510-TC 42LB551T-TC 42LB551B-TC 42LB551D-TC 42LB552R-TB 42LB552R-TC 42LB551Y-TC 42LB551Z-TC
Dimensions (W x H x D)	With stand (mm)	1373 x 848 x 280	731 x 480 x 208	959 x 611 x 218
	Without stand(mm)	1373 x 801 x 58.8	731 x 437 x 56.5	959 x 570 x 56.2
Weight	With stand (kg)	23.5	5.9	9.5
	Without stand (kg)	23.0	5.7	9.2
Power requirement		AC 100-240 V~ 50 / 60 Hz	AC 100-240 V~ 50 / 60 Hz	AC 100-240 V~ 50 / 60 Hz

MODELS		49LB55**	55LB55**
		49LB5500-TA 49LB550Z-TA 49LB550D-TA 49LB550B-TA 49LB550T-TA 49LB550Y-TA 49LB5510-TC 49LB551T-TC 49LB551B-TC 49LB551D-TC 49LB552R-TB 49LB552R-TC 49LB551Y-TC 49LB551Z-TC	55LB5500-TA 55LB550Z-TA 55LB550D-TA 55LB550B-TA 55LB550T-TA 55LB550Y-TA 55LB5510-TC 55LB551T-TC 55LB551B-TC 55LB551D-TC 55LB552R-TB 55LB552R-TC 55LB551Y-TC 55LB551Z-TC
Dimensions (W x H x D)	With stand (mm)	1105 x 694 x 247	1241 x 769 x 247
	Without stand(mm)	1105 x 652 x 56.5	1241 x 724 x 57.5
Weight	With stand (kg)	13.6	18.2
	Without stand (kg)	13.2	17.8
Power requirement		AC 100-240 V~ 50 / 60 Hz	AC 100-240 V~ 50 / 60 Hz

MODELS		32LB62**	
		32LB6200-TA 32LB620D-TA 32LB620B-TA 32LB620Z-TA 32LB620T-TA 32LB620Y-TA	32LB6230-TE 32LB623T-TE 32LB623B-TE 32LB623D-TE 32LB623Y-TE 32LB623Z-TE 32LB623Y-TF 32LB623Z-TF 32LB6230-TF 32LB623T-TF 32LB623B-TF 32LB623D-TF
Dimensions (W x H x D)	With stand (mm)	731 x 480 x 208	731 x 477.6 x 184.6
	Without stand(mm)	731 x 437 x 56.5	731 x 437 x 56.5
Weight	With stand (kg)	5.9	5.9
	Without stand (kg)	5.7	5.7
Power requirement		AC 100-240 V~ 50 / 60 Hz	AC 100-240 V~ 50 / 60 Hz
MODELS		**42LB62****	
		42LB6200-TA 42LB620D-TA 42LB620B-TA 42LB620Z-TA 42LB620T-TA 42LB620Y-TA	42LB6230-TE 42LB623T-TE 42LB623B-TE 42LB623D-TE 42LB623Y-TE 42LB623Z-TE 42LB623Y-TF 42LB623Z-TF 42LB6230-TF 42LB623T-TF 42LB623B-TF 42LB623D-TF
Dimensions (W x H x D)	With stand (mm)	959 x 611 x 218	959 x 609.7 x 193
	Without stand(mm)	959 x 570 x 56.2	959 x 570 x 56.2
Weight	With stand (kg)	9.5	9.5
	Without stand (kg)	9.2	9.2
Power requirement		AC 100-240 V~ 50 / 60 Hz	AC 100-240 V~ 50 / 60 Hz
MODELS		**49LB62****	
		49LB6200-TA 49LB620D-TA 49LB620B-TA 49LB620Z-TA 49LB620T-TA 49LB620Y-TA	49LB6230-TE 49LB623T-TE 49LB623B-TE 49LB623D-TE 49LB623Y-TE 49LB623Z-TE 49LB623Y-TF 49LB623Z-TF 49LB6230-TF 49LB623T-TF 49LB623B-TF 49LB623D-TF
Dimensions (W x H x D)	With stand (mm)	1105 x 694 x 247	1105 x 694.3 x 230
	Without stand(mm)	1105 x 652 x 56.5	1105 x 652 x 56.5
Weight	With stand (kg)	13.6	13.6
	Without stand (kg)	13.2	13.2
Power requirement		AC 100-240 V~ 50 / 60 Hz	AC 100-240 V~ 50 / 60 Hz

MODELS		55LB62**	
		55LB6200-TA 55LB620D-TA 55LB620B-TA 55LB620Z-TA 55LB620T-TA 55LB620Y-TA	55LB6230-TE 55LB623T-TE 55LB623B-TE 55LB623D-TE 55LB623Y-TE 55LB623Z-TE 55LB623Y-TF 55LB623Z-TF 55LB6230-TF 55LB623T-TF 55LB623B-TF 55LB623D-TF
Dimensions (W x H x D)	With stand (mm)	1241 x 769 x 247	1241 x 769 x 230
	Without stand(mm)	1241 x 724 x 57.5	1241 x 724 x 57.5
Weight	With stand (kg)	18.2	18.2
	Without stand (kg)	17.8	17.8
Power requirement		AC 100-240 V~ 50 / 60 Hz	AC 100-240 V~ 50 / 60 Hz

Environment condition	Operating Temperature	0 °C to 40 °C
	Operating Humidity	Less than 80 %
	Storage Temperature	-20 °C to 60 °C
	Storage Humidity	Less than 85 %

	Digital TV (Depend on Country)	Analogue TV (Depend on Country)
Television System	DVB-T (*DVB-T/T2)	PAL B/B, PAL B/G, PAL D/K, PAL-I SECAM B/G, SECAM D/K NTSC-M
Programme Coverage	VHF, UHF	VHF, UHF, CATV
Maximum number of storable programmes	DVB-T/T2 & Analogue TV : 1,500	
External Antenna Impedance	75 Ω	

* : Only DVB-T2 support models.

HDMI-DTV supported mode

Resolution	Horizontal Frequency (kHz)	Vertical Frequency (Hz)
720 x 480	31.469 31.5	59.94 60
720 x 576	31.25	50
1280 x 720	37.5 44.96 45	50 59.94 60
1920 x 1080	33.72 33.75 28.125 26.97 27 33.716 33.75 56.25 67.43 67.5	59.94 60 50 23.97 24 29.976 30.00 50 59.94 60

Component port connecting information

Component ports on the TV	Y	P_B	P_R

Video output ports on DVD player	Y	P_B	P_R
	Y	B-Y	R-Y
	Y	Cb	Cr
	Y	Pb	Pr

Signal	Component
480i / 576i	O
480p / 576p	O
720p / 1080i	O
1080p	O (50 Hz / 60 Hz only)

HDMI-PC supported mode

(Use HDMI IN 1 for PC mode)

Resolution	Horizontal Frequency (kHz)	Vertical Frequency (Hz)
640 x 350	31.468	70.09
720 x 400	31.469	70.08
640 x 480	31.469	59.94
800 x 600	37.879	60.31
1024 x 768	48.363	60.00
1152 x 864	54.348	60.053
1360 x 768	47.712	60.015
1280 x 1024	63.981	60.020
1920 x 1080	67.50	60.00

(Except for 32LB56*B, 32LB56*D, 32LB55*B, 32LB55*D, 32LB55*R, 32LB56*Z, 32LB55*Z, 32LB62*B, 32LB62*D, 32LB62*Z)

3D supported mode (Only 3D model)

- Video, which is input as below media contents is switched into the 3D screen automatically.
- The method for 3D digital broadcast may differ depending on the signal environment. If video is not switched automatically into 3D, manually convert the settings to view 3D images.

3D supported mode automatically					
Input	**Signal**	**Resolution**	**Horizontal Frequency (kHz)**	**Vertical Frequency (Hz)**	**Playable 3D video format**
HDMI	720p	1280 X 720	37.5	50	Side by Side(half), Top and Bottom
			45	60	
			75	50	Frame packing
			89.9 / 90	59.94 / 60	
	1080i	1920 X 1080	33.7	60	Side by Side(half), Top and Bottom
			28.1	50	
	1080p	1920 X 1080	27	24	Side by Side(half), Top and Bottom
			33.7	30	
			67.5	60	
			56.3	50	
			53.95 / 54	23.98 / 24	Frame packing
3D supported mode manually					
Input	**Signal**	**Resolution**	**Horizontal Frequency (kHz)**	**Vertical Frequency (Hz)**	**Playable 3D video format**
HDMI	720p	1280 X 720	37.5	50	Side by Side, Top and Bottom
			45	60	
	1080i	1920 X 1080	33.75	60	Side by Side, Top and Bottom
			28.125	50	
	1080p	1920 X 1080	27	24	Side by Side, Top and Bottom
			33.75	30	
			67.5	60	Side by Side, Top and Bottom, Single frame sequential
			56.25	50	
DTV	720p	1280 X 720	37.5	50	Side by Side, Top and Bottom
	1080i	1920 X 1080	28.125	50	
USB	1080p	1920 X 1080	33.75	30	Side by Side, Top and Bottom

Life's Good
PT. LG ELECTRONICS INDONESIA
Kawasan Industri MM2100 Blok G
Cikarang Barat, Bekasi, Jawa Barat 17520
INDONESIA

(Hanya DTV)

Digital Video Broadcasting

Catat nomor model dan nomor seri TV.
Mengacu pada label di penutup belakang dan Informasikan pada dealer Anda apabila memerlukan jasa pelayanan.

MODEL _____

SERIAL _____

TANDA PENDAFTARAN

PETUNJUK PENGGUNAAN (MANUAL) DAN KARTU JAMINAN/GARANSI PURNA JUAL

DALAM BAHASA INDONESIA BAGI PRODUK TELEMATIKA DAN ELEKTRONIKA

NOMOR :

P.32.LG168.00101.0114 : 32LB5600, 39LB5650, 47LB563D, 55LB563B, 42LB550T, 32LB623B, 32LB560T, 42LB5600, 47LB5650, 55LB563D, 42LB5510, 32LB623D, 32LB560B, 42LB560T, 50LB5600, 55LB5650, 42LB551T, 42LB6200, 32LB560D, 42LB560B, 50LB560T, 60LB5600, 42LB551B, 42LB620D, 32LB565B, 42LB560D, 50LB560B, 60LB560T, 42LB551D, 42LB620B, 32LB5610, 42LB565B, 50LB560D, 60LB560B, 49LB5500, 42LB620T, 32LB561T, 42LB5610, 50LB565B, 60LB560D, 49LB550D, 42LB6230, 32LB561B, 42LB561T, 50LB5610, 60LB565B, 49LB550B, 42LB623T, 32LB561D, 42LB561B, 50LB561T, 60LB5610, 49LB550T, 42LB623B, 32LB5630, 42LB561D, 50LB561B, 60LB561T, 49LB5510, 42LB623D, 32LB563T, 42LB5630, 50LB561D, 60LB561B, 49LB551T, 49LB6200, 32LB563B, 42LB563T, 50LB5630, 60LB561D, 49LB551B, 49LB620D, 32LB563D, 42LB563B, 50LB563T, 60LB5630, 49LB551D, 49LB620B, 32LB5650, 42LB563D, 50LB563B, 60LB563T, 55LB5500, 49LB620T, 39LB5600, 42LB5650, 50LB563D, 60LB563B, 55LB550D, 49LB6230, 39LB560T, 47LB5600, 50LB5650, 60LB563D, 55LB550B, 49LB623T, 39LB560B, 47LB560T, 55LB5600, 60LB5650, 55LB550T, 49LB623B, 39LB560D, 47LB560B, 55LB560T, 32LB5500, 55LB5510, 49LB623D, 39LB565B, 47LB560D, 55LB560B, 32LB550D, 55LB551T, 55LB6200, 39LB5610, 47LB565B, 55LB560D, 32LB550B, 55LB551B, 55LB620D, 39LB561T, 47LB5610, 55LB565B, 32LB550T, 55LB551D, 55LB620B, 39LB561B, 47LB561T, 55LB5610, 32LB5510, 32LB6200, 55LB620T, 39LB561D, 47LB561B, 55LB561T, 32LB551B, 32LB620D, 55LB6230, 39LB5630, 47LB561D, 55LB561B, 32LB551D, 32LB620B, 55LB623T, 39LB563T, 47LB5630, 55LB561D, 42LB5500, 32LB620T, 55LB623B, 39LB563B, 47LB563T, 55LB5630, 42LB550D, 32LB6230, 55LB623D, 39LB563D, 47LB563B, 55LB563T, 42LB550B, 32LB623T.