LG
Life's Good

OWNER'S MANUAL
LED TV*

*Disclaimer
LG LED TVs are LCD TVs with LED backlighting.

Please read this manual carefully before operating your TV and retain it for future reference.

MT45*

www.lg.com

ENGLISH

TABLE OF CONTENTS

3 LICENSES

3 OPEN SOURCE SOFTWARE NOTICE

4 ASSEMBLING AND PREPARING

4 Unpacking
6 Part and buttons
7 - Using the Joystick button
9 Lifting and moving the TV
10 Setting up the TV
10 - Attaching the Stand
11 - Detaching the Stand
13 Mounting on a table
15 Mounting on a wall

17 MAKING CONNECTIONS

17 Antenna Connection
18 Other connections
20 - Connecting to a PC

21 REMOTE CONTROL

22 SETTINGS

27 TO SEE WEB MANUAL

28 MAINTENANCE

28 Cleaning your TV
28 - Screen, frame, cabinet and stand
28 - Power cord
28 Preventing “Image burn or retention” or “Burn-in” on your TV screen

29 TROUBLESHOOTING

30 SPECIFICATIONS

WARNING

- If you ignore the warning message, you may be seriously injured or there is a possibility of accident or death.

CAUTION

- If you ignore the caution message, you may be slightly injured or the product may be damaged.

NOTE

- The note helps you understand and use the product safely. Please read the note carefully before using the product.

LICENSES

Supported licenses may differ by model. For more information about licenses, visit *www.lg.com*.

Manufactured under license from Dolby Laboratories. Dolby and the double-D symbol are trademarks of Dolby Laboratories.

The terms HDMI and HDMI High-Definition Multimedia Interface, and the HDMI logo are trademarks or registered trademarks of HDMI Licensing LLC in the United States and other countries.

ABOUT DIVX VIDEO: DivX® is a digital video format created by DivX, LLC, a subsidiary of Rovi Corporation. This is an official DivX Certified® device that has passed rigorous testing to verify that it plays DivX video. Visit *divx.com* for more information and software tools to convert your files into DivX video.

ABOUT DIVX VIDEO-ON-DEMAND: This DivX Certified® device must be registered in order to play purchased DivX Video-on-Demand (VOD) movies. To obtain your registration code, locate the DivX VOD section in your device setup menu. Go to vod.divx.com for more information on how to complete your registration.

“DivX Certified® to play DivX® video up to HD 1080p, including premium content.”

“DivX®, DivX Certified® and associated logos are trademarks of Rovi Corporation or its subsidiaries and are used under license.”

“Covered by one or more of the following U.S. patents :
7,295,673; 7,460,668; 7,515,710; 7,519,274”

OPEN SOURCE SOFTWARE NOTICE

To obtain the source code under GPL, LGPL, MPL and other open source licenses, that is contained in this product, please visit *http://opensource.lge.com*.
In addition to the source code, all referred license terms, warranty disclaimers and copyright notices are available for download.
LG Electronics will also provide open source code to you on CD-ROM for a charge covering the cost of performing such distribution (such as the cost of media, shipping and handling) upon email request to opensource@lge.com. This offer is valid for three (3) years from the date on which you purchased the product.

ENGLISH

NOTE

- Image shown may differ from your TV.
- Your TV's OSD (On Screen Display) may differ slightly from that shown in this manual.
- The available menus and options may differ from the input source or product model that you are using.
- New features may be added to this TV in the future.
- The TV can be placed in standby mode in order to reduce the power consumption. And the TV should be turned off if it will not be watched for some time, as this will reduce energy consumption.
- The energy consumed during use can be significantly reduced if the level of brightness of the picture is reduced, and this will reduce the overall running cost.

ASSEMBLING AND PREPARING

Unpacking

Check your product box for the following items. If there are any missing accessories, contact the local dealer where you purchased your product. The illustrations in this manual may differ from the actual product and item.

CAUTION

- Do not use any unapproved items to ensure the safety and product life span.
- Any damage or injuries caused by using unapproved items are not covered by the manufacturer's warranty.
- Some models have a thin film attached on to the screen and this must not be removed.

NOTE

- The items supplied with your product may vary depending on the model.
- Product specifications or contents of this manual may be changed without prior notice due to upgrade of product functions.
- For an optimal connection, HDMI cables and USB devices should have bezels less than 10 mm thick and 18 mm width. Use an extension cable that supports USB 2.0 if the USB cable or USB memory stick does not fit into your TV's USB port.

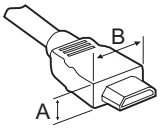

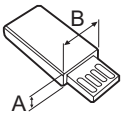

*A ≦ 10 mm

*B ≦ 18 mm

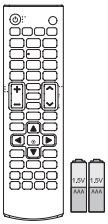

Remote control / batteries (AAA)
(See p.21)

CD (Owner's Manual) / Cards

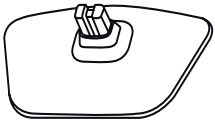

Stand Base
(Only 22/24/28MT45*)
(See p.10, 11)

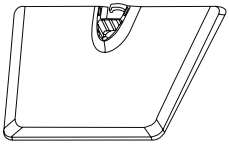

Stand Base
(Only 29MT45*)
(See p.11, 12)

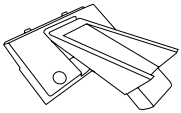

Stand Body
(Only 29MT45*)
(See p.10, 12)

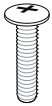

Stand Screws
2EA, M4 X L16
(Only 29MT45*)
(See p.11, 12)

Power Cord

(See p.13)

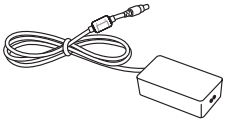

AC-DC Adapter

(See p.13)

ENGLISH

Part and buttons

(Only 22/24/28MT45*)

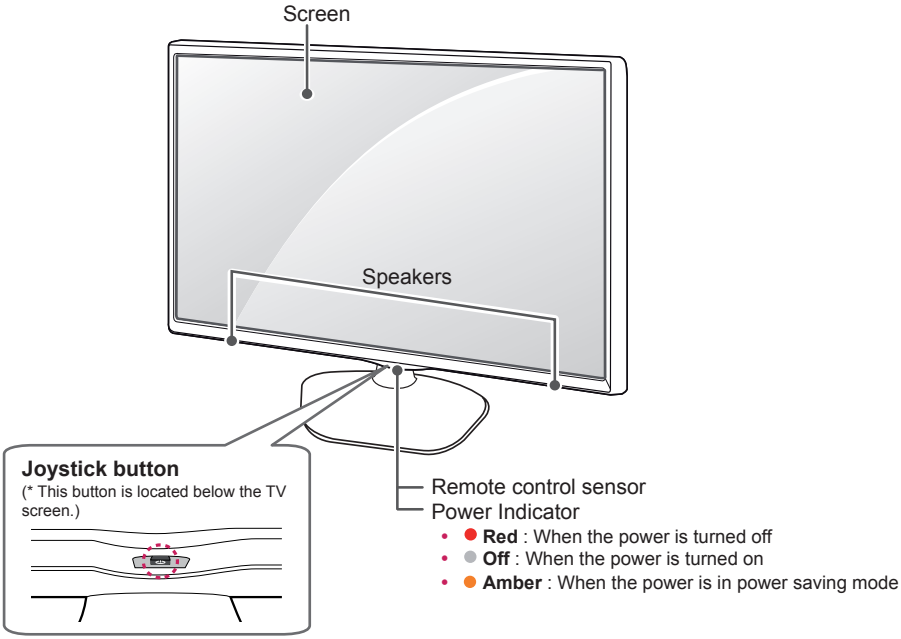

NOTE

- You can set the power indicator light to on or off by selecting **OPTION** in the main menus.

Using the Joystick button

You can simply operate the TV functions, by pressing to turn ON/OFF or sliding your finger over joystick button moving up, down, left or right.

Basic Functions

	Power On	When the TV is turned off, place your finger on the joystick button and press it once and release it.
	Power Off	When the TV is turned on, place your finger on the joystick button and press it once for a few seconds and release it. (However, if the Menu button is on the screen, pressing and holding the joystick button will let you exit the Menu.)
	Volume Control	If you place your finger over the joystick button and move it left or right, you can adjust the volume level you want.
	Programmes Control	If you place your finger over the joystick button and move it up or down, you can scrolls through the saved programmes what you want.

NOTE

- When your finger is over the joystick button and you are sliding finger forward/back ,left or right, be careful not to press down to hard on joystick. If you press down hard on joystick button first then the adjustment of Volume level and program scroll action will not operate.

Adjusting the Menu

When the TV is turned on, press the joystick button one time.

You can adjust the Menu items (⏻,⚙,✕,⏻) moving the joystick button up, down, left or right.

	⏻	TV off	Turns the power off.
	⚙	Settings	Accesses the main menu.
	✕	Close	Clears on-screen displays and returns to TV viewing.
	⏻	Input List	Changes the input source.

(Only 29MT45*)

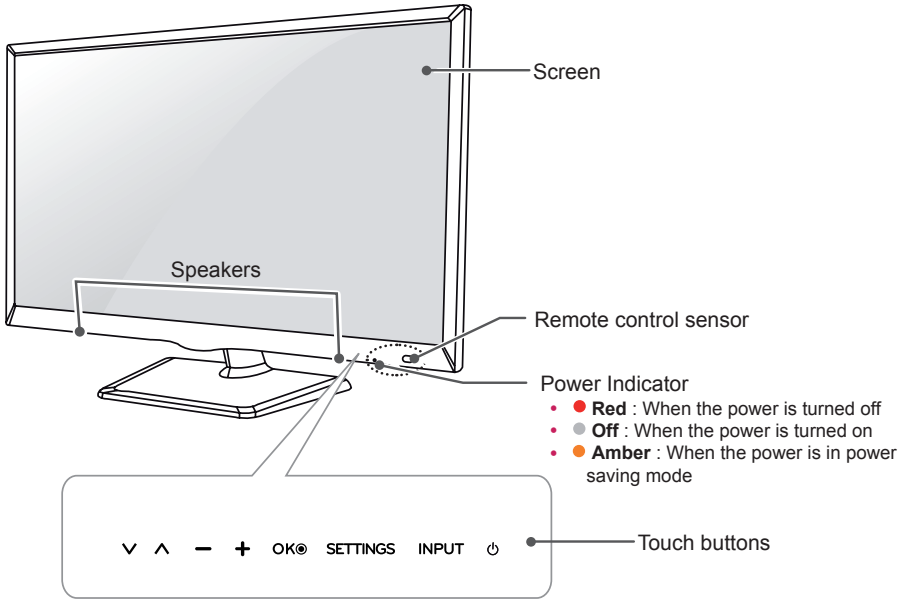

NOTE

- All of the buttons are touch sensitive and can be operated through simple touch with your finger.
- You can set the power indicator light to on or off by selecting **OPTION** in the main menus.

Touch buttons	Description
∨ ∧	Scrolls through the saved programmes.
− +	Adjusts the volume level.
OK ◉	Selects the highlighted menu option or confirms an input.
SETTINGS	Accesses the main menus, or saves your input and exits the menus.
INPUT	Changes the input source.
⏻	Turns the power on or off.

Lifting and moving the TV

Please note the following advice to prevent the TV from being scratched or damaged and for safe transportation regardless of its type and size.

CAUTION

- Avoid touching the screen at all times, as this may result in damage to the screen.

- It is recommended to move the TV in the box or packing material that the TV originally came in.
- Before moving or lifting the TV, disconnect the power cord and all cables.
- When holding the TV, the screen should face away from you to avoid damage.

- Hold the top and bottom of the TV frame firmly. Make sure not to hold the transparent part, speaker, or speaker grill area.

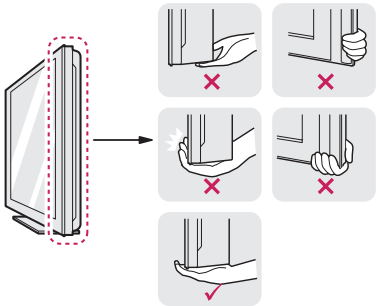

- When transporting the TV, do not expose the TV to jolts or excessive vibration.
- When transporting the TV, keep the TV upright, never turn the TV on its side or tilt towards the left or right.
- Do not apply excessive pressure to cause flexing / bending of frame chassis as it may damage screen.

CAUTION

- When handling the TV, be careful not to damage the protruding joystick button. (Depending on model)

ENGLISH

Setting up the TV

Image shown may differ from your TV.

Attaching the Stand

22/24/28MT45*

1

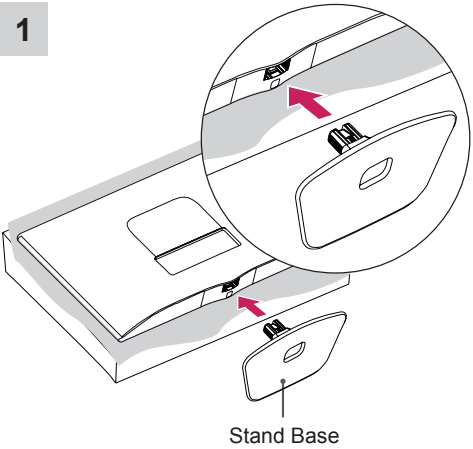

2

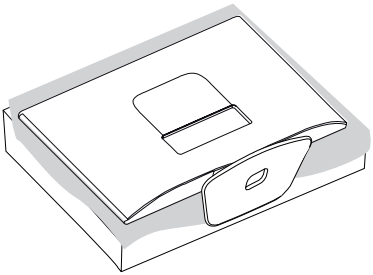

29MT45*

1

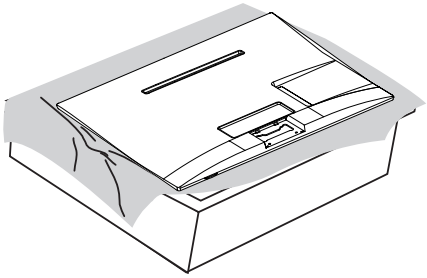

2

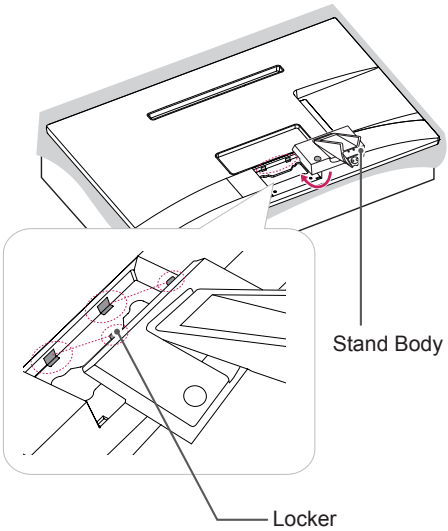

CAUTION

- When attaching the stand to the TV set, place the screen facing down on a cushioned table or flat surface to protect the screen from scratches.

3

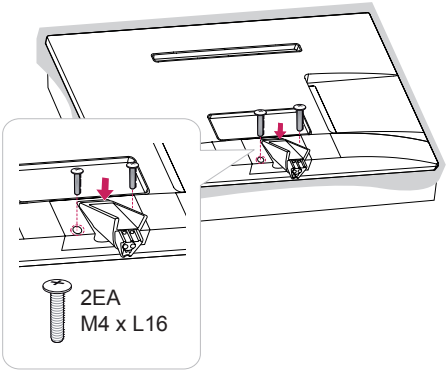

NOTE

- If you don`t fasten the screw tightly, TV will fall down and get damaged.
- Tighten the screws firmly to prevent the TV from tilting forward. Do not over tighten.

4

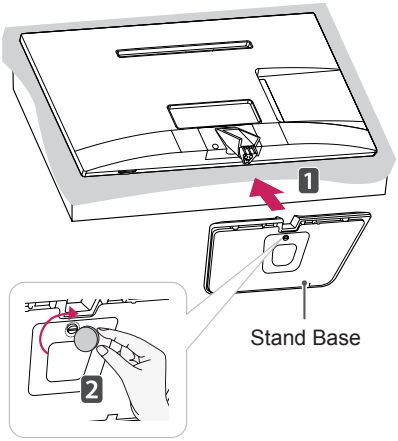

Detaching the Stand

22/24/28MT45*

1

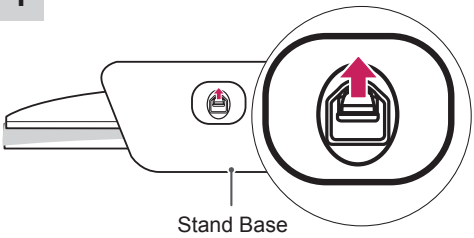

NOTE

- Lift up the latch at the bottom of the stand base and detach the stand base from the TV.

2

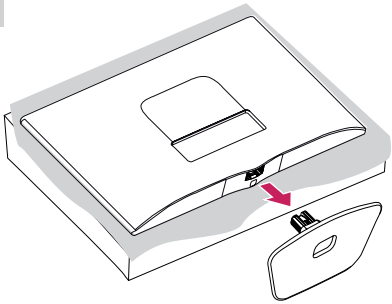

ENGLISH

29MT45*

1

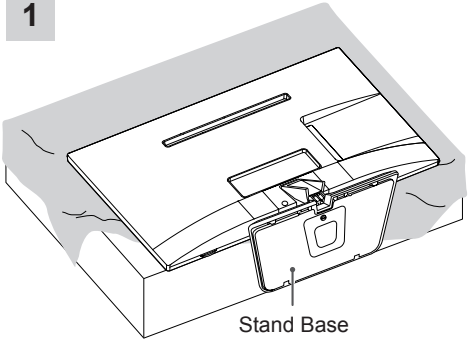

2

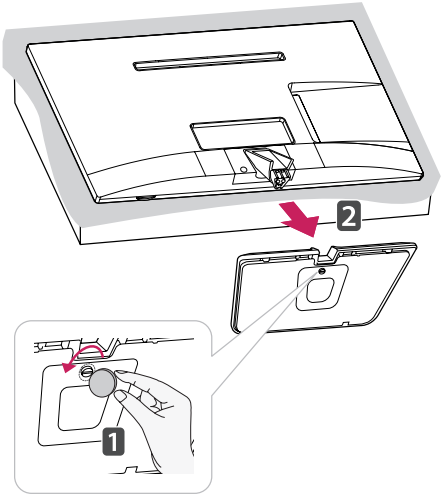

3

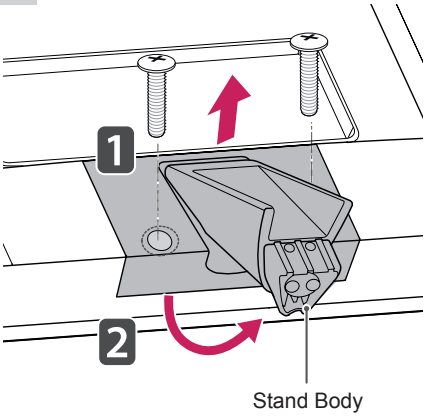

CAUTION

- When detaching the stand to the TV set, place the screen facing down on a cushioned table or flat surface to protect the screen from scratches.

CAUTION

- Do not carry the TV upside-down by holding the stand body (or stand base) as this may cause it to fall off, resulting in damage or injury.
- The illustration shows a general example of installation and may look different from the actual product.

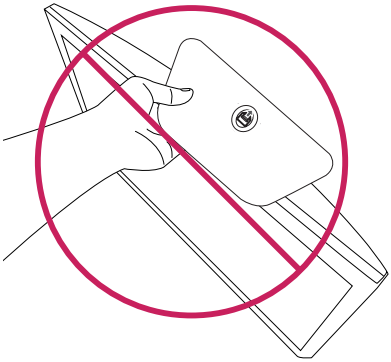

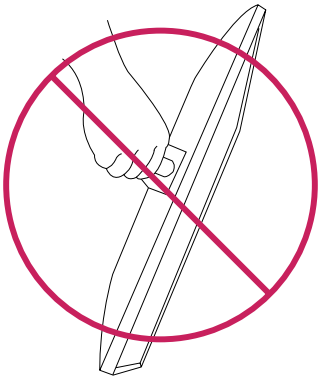

Mounting on a table

1 Lift and tilt the TV into its upright position on a table.Leave a 10 cm (minimum) space from the wall for proper ventilation.

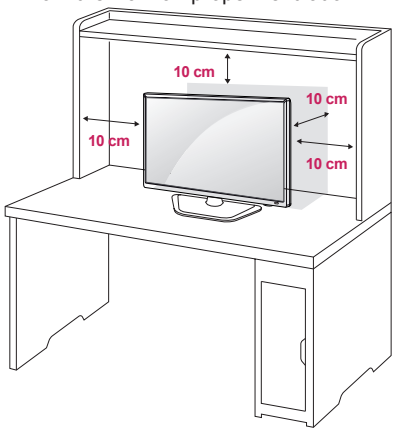

2 Connect the **AC-DC Adapter** and **Power Cord** to a wall outlet.

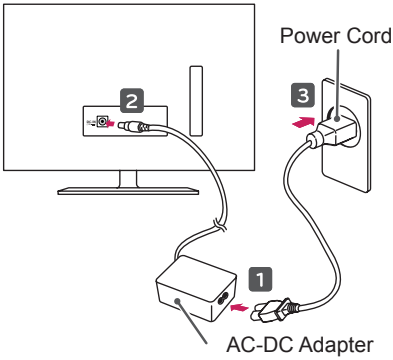

CAUTION

- Do not place the TV near or on sources of heat, as this may result in fire or other damage.
- Please be sure to connect the TV to the AC-DC power adapter before connecting the TV's power plug to a wall power outlet.

ENGLISH

Using the Kensington security system

- Image shown may differ from your TV.

The Kensington security system connector is located at the rear of the TV. For more information of installation and using, refer to the manual provided with the Kensington security system or visit *http://www.kensington.com.*

Connect the Kensington security system cable between the TV and a table.

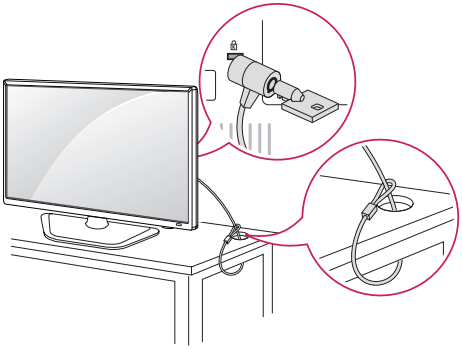

NOTE

- The Kensington security system is optional. You can obtain additional accessories from most electronics stores.

Adjusting the angle of the TV to suit view

- Image shown may differ from your TV.

Tilt from +20 to -5 degrees up or down to adjust the angle of the TV to suit your view. (Only 22/24/29MT45*)

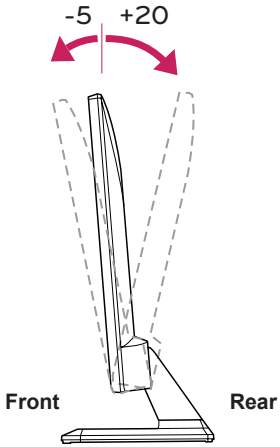

CAUTION

- When you adjust the angle, do not hold the button of the TV frame as shown on the following Illustration, as may injure your fingers.

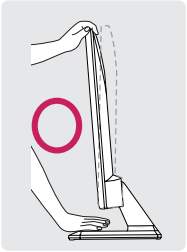

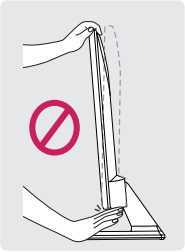

Mounting on a wall

For proper ventilation, allow a clearance of 10 cm on each side and from the wall. Detailed installation instructions are available from your dealer, see the optional Tilt Wall Mounting Bracket Installation and Setup Guide.

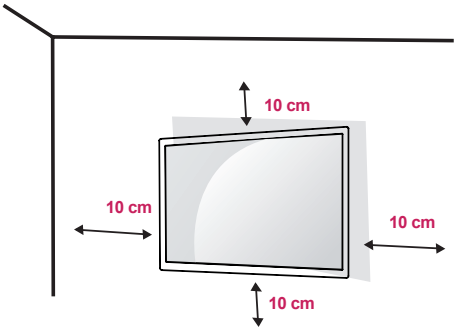

If you intend to mount the TV to a wall, attach Wall mounting interface (optional parts) to the back of the TV.
When you install the TV using the wall mounting interface (optional parts), attach it carefully so it will not drop.

1. If you use screw longer than standard, the TV might be damaged internally.
2. If you use improper screw, the product might be damaged and drop from mounted position. In this case, LG Electronics is not responsible for it.

Separate purchase(Wall Mounting Bracket)

Model	22/24MT45*	28/29MT45*
Wall Mount (A x B)	75 x 75	100 x 100
Standard screw	M4 x L10	
Number of screws	4	
Wall mount bracket (optional)	RW120 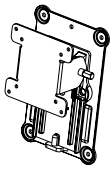	

- Wall Mount (A x B)

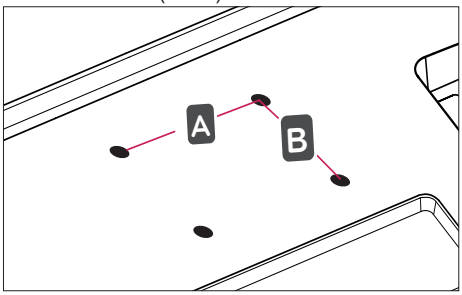

ENGLISH

CAUTION

- Disconnect the power first, and then move or install the TV. Otherwise electric shock may occur.
- If you install the TV on a ceiling or slanted wall, it may fall and result in severe injury. Use an authorized LG wall mount and contact the local dealer or qualified personnel.
- Do not over tighten the screws as this may cause damage to the TV and void your warranty.
- Use the screws and wall mounts that meet the VESA standard. Any damages or injuries by misuse or using an improper accessory are not covered by the manufacturer's warranty.
- Screw length from outer surface of back cover should be under 8mm.

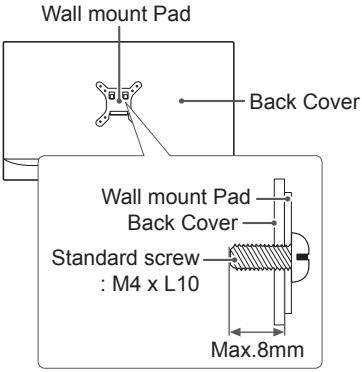

NOTE

- Use the screws that are listed on the VESA standard screw specifications.
- The wall mount kit includes an installation manual and necessary parts.
- The wall mount bracket is optional. You can obtain additional accessories from your local dealer.
- The length of screws may differ depending on the wall mount. Be sure to use the proper length.
- For more information, refer to the instructions supplied with the wall mount.

MAKING CONNECTIONS

This section on **MAKING CONNECTIONS** mainly uses diagrams for the MT45D models.

Connect various external devices to the TV and switch input modes to select an external device. For more information of external device's connection, refer to the manual provided with each device.
Available external devices are: HD receivers, DVD players, VCRs, audio systems, USB storage devices, PC, gaming devices, and other external devices.

NOTE

- The external device connection may differ from the model.
- Connect external devices to the TV regardless of the order of the TV port.
- If you record a TV programme on a DVD recorder or VCR, make sure to connect the TV signal input cable to the TV through a DVD recorder or VCR. For more information of recording, refer to the manual provided with the connected device.
- Refer to the external equipment's manual for operating instructions.
- If you connect a gaming device to the TV, use the cable supplied with the gaming device.
- In PC mode, there may be noise associated with the resolution, vertical pattern, contrast or brightness. If noise is present, change the PC output to another resolution, change the refresh rate to another rate or adjust the brightness and contrast on the PICTURE menu until the picture is clear.
- In PC mode, some resolution settings may not work properly depending on the graphics card.

Antenna Connection

Connect the TV to a wall antenna socket with an RF cable (75 Ω).

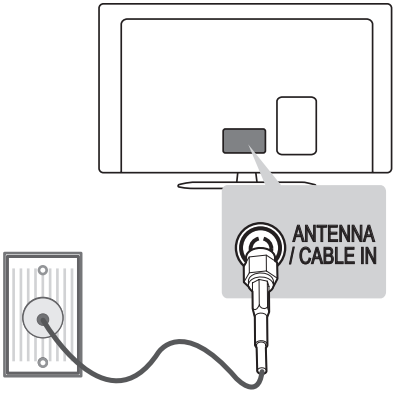

(*Not Provided)

NOTE

- Use a signal splitter to use more than 2 TVs.
- If the image quality is poor, install a signal amplifier properly to improve the image quality.
- If the image quality is poor with an antenna connected, try to realign the antenna in the correct direction.
- An antenna cable and converter are not supplied.
- Supported DTV Audio: MPEG, Dolby Digital, Dolby Digital Plus, HE-AAC.

ENGLISH

Other connections

Connect your TV to external devices. For the best picture and audio quality, connect the external device and the TV with the HDMI cable as shown. Some separate cable is not provided.

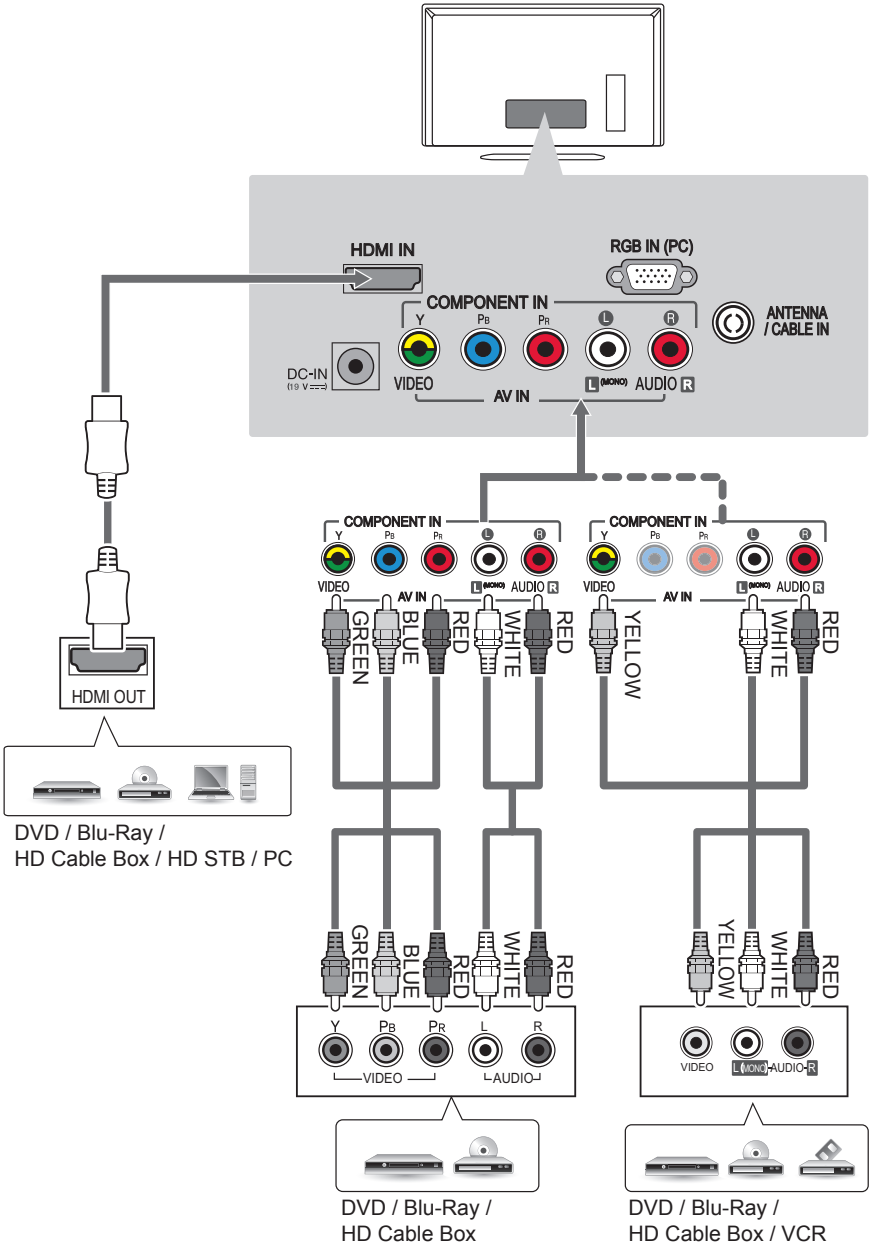

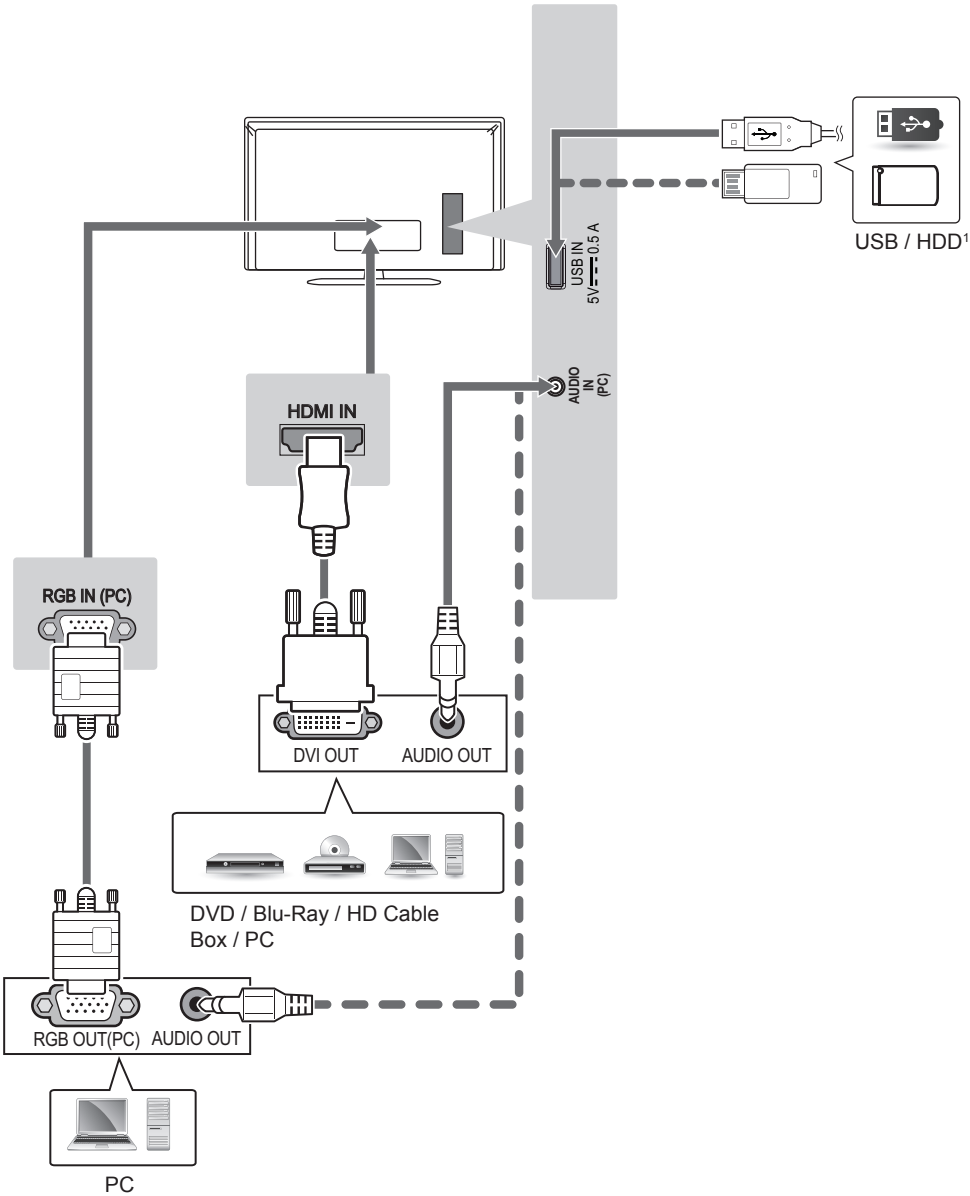

1 USB port supports 0.5A electric current. If you need more electric current in case of HDD, use the separate power adaptor.

Connecting to a PC

Your TV supports the Plug & Play* feature and has the built-in speakers with Virtual Surround that reproduces sound clearly with a rich bass.
* Plug & Play: The function when a PC recognizes a connected device that users connect to a PC and turn on, without device configuration or user intervention.

NOTE

- If you want to use HDMI-PC mode, you must set the **Input Label** to **PC** mode.
- The **OSD (On Screen Display)** is displayed on the screen as shown below.
  - » When turning the product on in **HDMI** input.
  - » When switching to **HDMI** input.

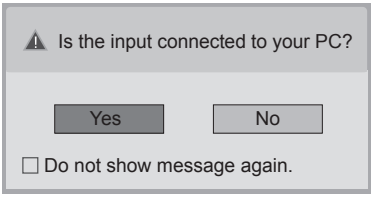

- If you select **"Yes"** the size and image quality are optimised for your PC.
- If you select **"No"** the size and image quality are optimised for the AV device (DVD player, set-top box, gaming device).
- If you select **"Do not show message again"** this message does not appear until the TV is reset. You can change the set value in **SETTINGS ► INPUT ► Input Label**.

ENGLISH

REMOTE CONTROL

The descriptions in this manual are based on the buttons on the remote control.
Please read this manual carefully and use the TV correctly.
To replace batteries, open the battery cover, replace batteries (1.5 V AAA) matching the ⊕ and ⊖ ends to the label inside the compartment, and close the battery cover.
To remove the batteries, perform the installation actions in reverse.

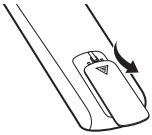

CAUTION

- Do not mix old and new batteries, as this may damage the remote control.
- In Analogue TV and some countries, some remote control buttons may not work.

Make sure to point the remote control toward the remote control sensor on the TV.

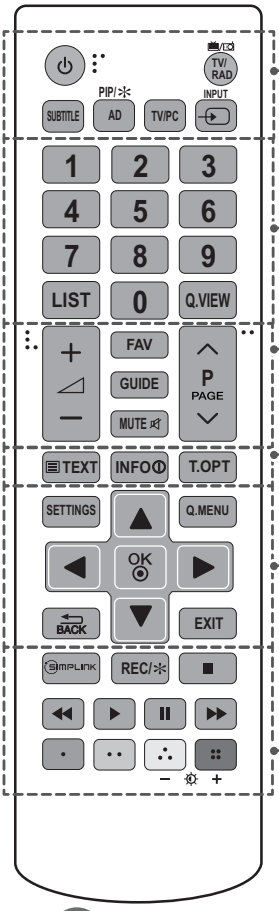

(POWER) Turn the power on or off.
TV/RAD Selects Radio, TV and DTV programme.
SUBTITLE Recalls your preferred subtitle in digital mode.
AD By pressing the AD button, audio descriptions function will be enabled.
PIP/ Turns the PIP mode on or off. (Depending on model)
TV/PC Selects TV or PC mode.
INPUT Changes the input source.

Number buttons Enters numbers.
LIST Accesses the saved programme list.
Q.VIEW Returns to the previously viewed programme.

FAV Accesses your favourite programme list.
GUIDE Shows programme guide.
MUTE Mutes all sounds.
+ ⊿ − Adjusts the volume level.
∧ P ∨ Scrolls through the saved programmes.
∧ PAGE ∨ Moves to the previous or next screen.

Teletext buttons (TEXT, T.OPT) These buttons are used for teletext.
INFO Views the information of the current programme and screen.

SETTINGS Accesses the main menus.
Q.MENU Accesses the Quick menus.
Navigation buttons (up/down/left/right) Scrolls through menus or options.
OK Selects menus or options and confirms your input.
BACK Returns to the previous level.
EXIT Clears on-screen displays and returns to TV viewing.

SIMPLINK Accesses the AV devices connected with the HDMI cable through HDMI-CEC. Opens the SIMPLINK menu.
REC/ Starts to record and displays record menu. (Depending on model)
Control buttons (■, ▶, II, ◀◀, ▶▶) Controls the MY MEDIA menus, or the SIMPLINK compatible devices (USB,SIMPLINK).
Coloured buttons These access special functions in some menus. (: Red, : Green, : Yellow, : Blue)
− + (Backlight) Adjusts the brightness of the screen by controlling the screen backlight.

NOTE

- On MHEG programme, you cannot adjust the backlight with the yellow or blue button.
- AD(Audio Description Service) may not be available on all models and is also dependant on broadcast service in your country.

ENGLISH

SETTINGS

Automatically Setting Up Programme

SETTINGS ⇨SETUP ⇨Auto Tuning

- Automatically tunes the programmes.
- If Input Source is not connected properly, programme registration may not work.
- **Auto Tuning** only finds programmes that are currently broadcasting.
- If **Lock System** is turned on, a pop-up window will appear asking for password.

To adjust picture with Picture Wizard

SETTINGS ⇨PICTURE ⇨Picture Wizard III

[Depending on model]
Calibrates and adjusts for optimum picture quality using the remote control and the Picture Wizard without expensive pattern devices or help from a specialist.

To select Picture Mode

SETTINGS ⇨PICTURE ⇨Picture Mode

Select the picture mode optimized for the viewing environment or the programme.

- **Vivid** : Heightens contrast, brightness and sharpness to display vivid images.
- **Standard** : Displays images in standard levels of contrast, brightness and sharpness.
- **Eco/APS** : [Depending on model]
  The Energy Saver feature changes settings on the TV to reduce power consumption.
- **Cinema/Game** : Displays the optimum picture for movie, game.
- **Soccer** : [Depending on model] Optimised picture mode for football matches. The pitch and kits are presented in vibrant colours, with crystal-clear images even for fast movements.
- **Expert** : Menu for adjusting picture quality that allows experts and amateurs to enjoy the best TV viewing. This is the adjustment menu provided for ISF-certified picture tuning professionals. (ISF logo can only be used on ISF-certified TVs.)
  ISFccc: Imaging Science Foundation Certified Calibration Control
- Depending on input signal, available range of picture modes may differ.
- **Expert** mode is for picture tuning professionals to control and fine-tune using a specific image. For normal images, the effects may not be dramatic.
- The ISF function is only available on some models.

To set advanced control

SETTINGS ⇨PICTURE ⇨Picture Mode ⇨Advanced Control / Expert Control

Calibrates the screen for each picture mode; or adjusts picture settings for a special screen. First select a **Picture Mode** of your choice.

- **Dynamic Contrast** : Adjusts the contrast to the optimal level according to the brightness of the image.
- **Dynamic Colour** : Adjusts colours to make the image appear in more natural colours.
- **Skin Colour** : Sets Skin colour spectrum separately to implement the skin colour as defined by the user.
- **Sky Colour** : Sky colour is set separately.

- **Grass Colour** : Natural colour spectrum (meadows, hills, etc.) can be separately set.
- **Gamma** : Sets the gradation curve according to the output of picture signal in relation to the input signal.
- **Colour Gamut** : Selects the range of colours that can be expressed.
- **Edge Enhancer** : Shows clearer and distinctive yet natural edges of the video.
- **Expert Pattern** : [Depending on model] Patterns used for expert adjustment.
- **Colour Filter** : Filters a specific colour spectrum in RGB colours to fine-tune colour saturation and hue accurately.
- **Colour Temperature** : Adjusts the overall tone of the screen as desired. In Expert mode, detailed fine-tuning can be set via Gamma method, etc.
- **Colour Management System** : This is a system that experts use when they adjust colour with a test pattern. They can select from six colour areas (Red / Green / Blue / Cyan / Magenta / Yellow) without affecting other colours. For normal images, adjustments may not result in noticeable colour changes.
- Depending on input signal or other picture settings, the range of detailed items for adjustment may differ.

To set additional picture options

SETTINGS ⇨PICTURE ⇨Picture Mode ⇨Picture Option

[Depending on model]
Adjusts detailed setting for images.

- **Noise Reduction** : Eliminates noise in the picture.
- **MPEG Noise Reduction** : Eliminates noise generated while creating digital picture signals.
- **Black Level** : Adjusts the brightness and contrast of the screen to suit the black level of the input picture by using the blackness (black level) of the screen.
- **Real Cinema** : Optimizes the screen for movie viewing.
- **Motion Eye Care / SUPER Energy Saving** : [Depending on model] Saves power consumption by adjusting the brightness corresponding to the movement of the image on the screen.
- Depending on input signal or other picture settings, the range of detailed items for adjustment may differ.

To use TruMotion

SETTINGS ⇨PICTURE ⇨TruMotion

[Depending on model]
Corrects images to display smoother motion sequences.

- **Smooth** : De-judder/De-blur working on higher range in auto mode.
- **Clear** : De-judder/De-blur working on middle range in auto mode.
- **User** : De-judder / De-blur can be set manually.
  De-judder : This function adjusts juddering of the screen.
  De-blur : This function adjusts and eliminates blurring of the screen.

Auto means Juddering and blurring range that depend on input video status is controlled by TruMotion mode.

To use Energy Saving feature

SETTINGS ⇨PICTURE ⇨Energy Saving

Reduces power consumption by adjusting screen brightness.

- **Auto** : [Depending on model]
  The TV sensor detects the ambient lighting and automatically adjusts the screen brightness.
- **Off** : Turns off the Energy Saving mode.
- **Minimum / Medium / Maximum** : Applies the pre-set Energy Saving mode.
- **Screen Off** : Screen is turned off and only sound is played. Press any button except Power button on the remote control to turn the screen back on.

ENGLISH

To use TV speaker

SETTINGS ⇨AUDIO ⇨Sound Out ⇨TV Speaker

[Depending on model]
Sound is output through the TV speaker.

To use External Speaker

SETTINGS ⇨AUDIO ⇨Sound Out ⇨External Speaker (Optical)

[Depending on model]
Sound is output through the speaker connected to the optical port.

- SimpLink is supported.

To use Digital Sound Out

SETTINGS ⇨AUDIO ⇨Sound Out ⇨External Speaker (Optical) ⇨Digital Sound Out

[Depending on model]
Sets up Digital Sound Out.

Item	Audio Input	Digital Audio Ouput
Auto	MPEG Dolby Digital Dolby Digital Plus HE-AAC	PCM Dolby Digital Dolby Digital Dolby Digital
PCM	All	PCM

To connect and use LG audio device

SETTINGS ⇨AUDIO ⇨Sound Out ⇨LG Sound Sync (Optical)

[Depending on model]
Connect LG audio device with the Sound Sync logo to the optical digital audio output port. LG audio device allows you to enjoy rich powerful sound easily.

To use Headphone

SETTINGS ⇨AUDIO ⇨Sound Out ⇨Headphone

[Depending on model]
Sound is output through the headphone connected to the earphone/headphone port.

To synchronize audio and video

SETTINGS ⇨AUDIO ⇨AV Sync. Adjust

[Depending on model]
Synchronizes video and audio directly when they do not match.

- If you set **AV Sync. Adjust** to **ON**, you can adjust the sound output (TV speakers or SPDIF) to the screen image.

To use SIMPLINK

[Depending on model]
SIMPLINK is a feature that enables you to control and manage various multimedia devices conveniently via the SIMPLINK menu.

1 Connect the TV's **HDMI IN** terminal and the SIMPLINK device's HDMI output terminal using an HDMI cable.

- [Depending on model]
  For home theatre units with a SIMPLINK function, connect HDMI terminals as above, and use an optical cable to connect Optical Digital Audio Out from the TV to Optical Digital Audio In of the SIMPLINK device.

2 Select **INPUT(OPTION)** ⇨ **SIMPLINK**. SIMPLINK menu window appears.

3 In SIMPLINK Setting window, set SIMPLINK function to **ON**.

4 In SIMPLINK menu window, selects the device you want to control.

- This function is only compatible with devices with the SIMPLINK logo.

- To use the SIMPLINK function, you need to use a high-speed HDMI® cable (with CEC (Consumer Electronics Control) feature added). High-speed HDMI® cables have the No. 13 pin connected for information exchange between devices.
- If you switch to another input, the SIMPLINK device will stop.
- If a third-party device with the HDMI-CEC function is also used, the SIMPLINK device may not work normally.
- [Depending on model]
  If you select or play media from a the device with a home theatre function, the **HT Speaker(Speaker)** is automatically connected.
  Be sure to connect with an optical cable (sold separately) to use the **HT Speaker(Speaker)** function.

SIMPLINK function description

- **Direct Play** : Plays the multimedia device on the TV instantly.
- **Select multimedia device** : Selects the desired device via the SIMPLINK menu to control it from the TV screen instantly.
- **Disc playback** : Manages the multimedia device with the TV remote control.
- **Power off all devices** : When you power off the TV, all connected devices are turned off.
- **Sync Power on** : When the equipment with SIMPLINK function connected HDMI terminal starts to play, the TV will automatically turn on.
- **Speaker** : [Depending on model]
  Select speaker either on the home theatre unit or the TV.

To set password

SETTINGS ⇨LOCK ⇨Set Password

Sets or changes the TV password.
The initial password is set to ‘0000’.

To return Factory Reset

SETTINGS ⇨ OPTION ⇨Factory Reset

All stored information is deleted and TV settings are reset.
The TV turns itself off and back on, and all settings are reset.

- When **Lock System** is in place, a pop-up window appears and asks for password
- Do not turn off the power during initialization.

To remove the USB device

Q.MENU ⇨USB Device

Select a USB storage device that you want to remove.
When you see a message that the USB device has been removed, separate the device from the TV.

- Once a USB device has been selected for removal, it can no longer be read. Remove the USB storage device and then re-connect it.

Using a USB storage device - warning

- If the USB storage device has a built-in auto recognition program or uses its own driver, it may not work.
- Some USB storage devices may not work or may work incorrectly.
- Use only USB storage devices formatted with the Windows FAT32 or NTFS File System.
- For external USB HDDs, it is recommended that you use devices with a rated voltage of less than 5 V and a rated current of less than 500 mA.
- It is recommended that you use USB memory sticks of 32 GB or less and USB HDDs of 1 TB or less.
- If a USB HDD with power-saving function does not work properly, turn the power off and on. For more information, refer to the user manual of the USB HDD.
- Data in the USB storage device can be damaged, so be sure to back up important files to other devices. Data maintenance is the user's responsibility and the manufacturer is not responsible for data loss.

My Media supporting file

- Maximum data transfer rate : 20 Mbps (Mega bit per second)
- External supported subtitle formats : *.srt (SubRip), *.smi (SAMI), *.sub (SubViewer, MicroDVD, DVDsubtitleSystem, SubIdx(Vobsub)), *.ass/*.ssa (SubStation Alpha), *.txt (TMplayer), *.psb (PowerDivX)
- Internal supported subtitle formats: XSUB (Supports internal subtitles generated from DivX)

Supported Video Formats

- Maximum: 1920 x 1080 @ 30p (only Motion JPEG 640 x 480 @ 30p)
- .asf, .wmv
  [Video] MPEG-2, MPEG-4 Part2, DivX3.11, DivX4, DivX5, DivX6, XViD, H.264/AVC, VC1(WMV3, WVC1), MP43
  [Audio] WMA Standard, WMA9(Pro), MP3, AAC, AC3, MP3, 3D WMV Single Stream
- .divx, .avi
  [Video] MPEG-2, MPEG-4 Part2, DivX3.11, DivX4, DivX5, DivX6, XViD, H.264/AVC
  [Audio] HE-AAC, LPCM, ADPCM, MPEG-1 Layer I, MPEG-1 Layer II, Dolby Digital, MPEG-1 Layer III (MP3), *DTS
- .ts, .trp, .tp, .mts, .m2ts
  [Video] H.264/AVC, MPEG-2, AVS, VC1
  [Audio] MPEG-1 Layer I, MPEG-1 Layer II, MPEG-1 Layer III (MP3), Dolby Digital, Dolby Digital Plus, AAC, HE-AAC, *DTS
- .vob
  [Video] MPEG-1, MPEG-2
  [Audio] Dolby Digital, MPEG-1 Layer I, MPEG- 1 Layer II, DVD-LPCM
- .mp4, .m4v, .mov
  [Video] MPEG-2, MPEG-4 Part2, DivX3.11, DivX4, DivX5, DivX6, XVID, H.264/AVC
  [Audio] AAC, MPEG-1 Layer III (MP3), *DTS
- .mkv
  [Video] MPEG-2, MPEG-4 Part2, DivX3.11, DivX4, DivX5, DivX6, XVID, H.264/AVC
  [Audio] HE-AAC, Dolby Digital, MPEG-1 Layer III (MP3), *DTS, LPCM
- motion JPEG
  [Video] MJPEG
  [Audio] LPCM, ADPCM
- .mpg, .mpeg, .mpe
  [Video] MPEG-1, MPEG-2
  [Audio] MPEG-1 Layer I, MPEG-1 Layer II, Dolby Digital, LPCM
- dat
  [Video] MPEG-1, MPEG-2
  [Audio] MP2
- flv
  [Video] Sorenson H.263, H.264/AVC
  [Audio] MP3, AAC, HE-AAC

- *rm, *rmvb
  [Video] RV30, RV40
  [Audio] Dolby Digital, AAC, HE-AAC, RA6(Cook)
- 3gp, 3gp2
  [Video] H.264/AVC, MPEG-4 Part2
  [Audio] AAC, AMR(NB/WB)

*DTS / *rm / *rmvb : Depending on model

Supported Audio Formats

- File type : mp3
  [Bit rate] 32 Kbps - 320 Kbps
  [Sample freq.] 16 kHz - 48 kHz
  [Support] MPEG1, MPEG2, Layer2, Layer3
- File Type : AAC
  [Bit rate] Free Format
  [Sample freq.] 8 kHz ~ 48 kHz
  [Support] ADIF, ADTS
- File Type : M4A
  [Bit rate] Free Format
  [Sample freq.] 8 kHz ~ 48 kHz
  [Support] MPEG-4
- File Type : WMA
  [Bit rate] 128 Kbps ~ 320 Kbps
  [Sample freq.] 8 kHz ~ 48 kHz
  [Support] WMA7, WMA8, WMA9 Standard
- File Type : WMA
  [Bit rate] ~ 768 Kbps
  [Channel / Sample freq.]
  M0 : up to 2 Channel @ 48 kHz
  (Except LBR mode),
  M1 : up to 5.1 Channel @ 48 kHz,
  M2 : up to 5.1 Channel @ 96 kHz
  [Support] WMA 10 Pro
- File Type : OGG
  [Bit rate] Free Format
  [Sample freq.] ~ 48 kHz
  [Support] OGG Vorvis

Supported Photo Formats

- Category : 2D (jpeg, jpg, jpe)
  [Available file type] SOF0: Baseline,
  SOF1 : Extend Sequential,
  SOF2 : Progressive
  [Photo size] Minimum : 64 x 64,
  Maximum : Normal Type: 15360 (W) x 8640 (H), Progressive Type : 1920 (W) x 1440 (H)
- Category : BMP
  [Photo size] Minimum : 64 x 64, Maximum : 9600 x 6400
- Category : PNG
  [Available file type] Interlace, Non-Interlace
  [Photo size] Minimum : 64 x 64, Maximum : Interlace : 1200 x 800, Non-Interlace : 9600 x 6400
- BMP and PNG format files may be slower to display than JPEG.

TO SEE WEB MANUAL

To obtain detailed User Guide information, please visit *www.lg.com*.

ENGLISH

MAINTENANCE

Cleaning your TV

Clean your TV regularly to keep the best performance and to extend the product lifespan.

CAUTION

- Make sure to turn the power off and disconnect the power cord and all other cables first.
- When the TV is left unattended and unused for a long time, disconnect the power cord from the wall outlet to prevent possible damage from lightning or power surges.

Screen, frame, cabinet and stand

- To remove dust or light dirt, wipe the surface with a dry, clean, and soft cloth.
- To remove major dirt, wipe the surface with a soft cloth dampened in clean water or a diluted mild detergent. Then wipe immediately with a dry cloth.

CAUTION

- Avoid touching the screen at all times, as this may result in damage to the screen.
- Do not push, rub, or hit the screen surface with your fingernail or a sharp object, as this may result in scratches and image distortions.
- Do not use any chemicals as this may damage the product.
- Do not spray liquid onto the surface. If water enters the TV, it may result in fire, electric shock, or malfunction.

Power cord

Remove the accumulated dust or dirt on the power cord regularly.

Preventing “Image burn or retention” or “Burn-in” on your TV screen

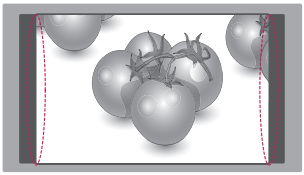
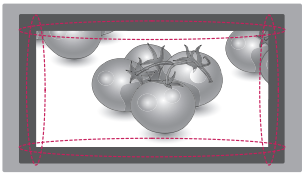
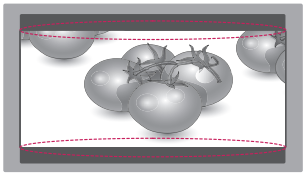

- If a fixed image displays on the TV screen for a long period of time, it will be imprinted and become a permanent disfigurement on the screen. This is “image burn” or “burn-in” and not covered by the warranty.
- If the aspect ratio of the TV is set to 4:3 for a long period of time, image burn may occur on the letterboxed area of the screen.
- Avoid displaying a fixed image on the TV screen for a long period of time (2 or more hours for LCD) to prevent image burn.

TROUBLESHOOTING

Problem	Solution
Cannot control the TV with the remote control.	• Check the remote control sensor on the product and try again. • Check if there is any obstacle between the product and the remote control. • Check if the batteries are still working and properly installed (⊕ to ⊕, ⊖ to ⊖).
No image display and no sound is produced.	• Check if the product is turned on. • Check if the power cord is connected to a wall outlet. • Check if there is a problem in the wall outlet by connecting other products.
The TV turns off suddenly.	• Check the power control settings. The power supply may be interrupted. • Check if the **Sleep Timer** or **Off Time** feature is activated in the **TIME** settings. • If there is no signal while the TV is on, the TV will turn off automatically after 15 minutes of inactivity.
When connecting to the PC (HDMI/DVI/RGB), 'No signal' or 'Invalid Format' is displayed.	• Turn the TV off/on using the remote control. • Reconnect the HDMI/RGB cable. • Restart the PC with the TV on.

ENGLISH

SPECIFICATIONS

Product specifications may be changed without prior notice due to upgrade of product functions.

MODELS		22MT45D	24MT45D 24MT45V
Dimensions (W x H x D)	With stand (mm)	507.6 x 364.3 x 166.4	556.0 x 392.7 x 166.4
	Without stand (mm)	507.6 x 314.7 x 56.0	556.0 x 343.2 x 56.0
Weight	With stand (kg)	3.0	3.6
	Without stand (kg)	2.8	3.4
Power requirement		19 V ⎓ 1.6 A	19 V ⎓ 1.6 A
AC/DC Adapter		Manufacturer : Lien Chang Model : LCAP25A, LCAP25B Manufacturer : Honor Model : ADS-40SG-19-2 19032G Manufacturer : APD Model : DA-32F19, DA-32B19	
		In: AC 100 - 240 V ~ 50/60 Hz	
		Out: DC 19 V ⎓ 1.7 A (Model : LCAP25A, ADS-40SG-19-2 19032G, DA-32F19, DA-32B19) Out: DC 19 V ⎓ 2.1 A (Model : LCAP25B)	
MODELS		**28MT45D**	**29MT45D 29MT45V**
Dimensions (W x H x D)	With stand (mm)	641.5 x 445.2 x 175.0	668.6 x 472.4 x 223.5
	Without stand (mm)	641.5 x 396.1 x 57.5	668.6 x 410.5 x 65.8
Weight	With stand (kg)	4.8	5.8
	Without stand (kg)	4.6	5.26
Power requirement		19 V ⎓ 1.6 A	19 V ⎓ 2.4 A
AC/DC Adapter		Manufacturer : Lien Chang Model : LCAP25B Manufacturer : LG Innotek Model : PSAB-L204B Manufacturer : APD Model : DA-40I19, DA-40E19	Manufacturer : Lien Chang Model : LCAP35 Manufacturer : APD Model : DA-48F19
		In: AC 100 - 240 V ~ 50/60 Hz	In: AC 100 - 240 V ~ 50/60 Hz
		Out: DC 19 V ⎓ 2.1 A	Out: DC 19 V ⎓ 2.53 A

Environment condition	Operating Temperature	10 °C to 35 °C
	Operating Humidity	20 % to 80 %
	Storage Temperature	-10 °C to 60 °C
	Storage Humidity	5 % to 90 %

	Digital TV (Depend on Country)	Analogue TV (Depend on Country)
Television System	DVB-T DVB-T/T2 (Only 24/29MT45V)	PAL B/B, PAL B/G, PAL D/K, PAL-I SECAM B/G, SECAM D/K NTSC-M
Programme Coverage	VHF, UHF	VHF, UHF, CATV
Maximum number of storable programmes	DVB-T& Analogue TV : 1,500 DVB-T/T2& Analogue TV : 1,500 (Only 24/29MT45V)	
External Antenna Impedance	75 Ω	

RGB (PC) / HDMI (PC) supported mode

(Only 22MT45*)

Resolution	Horizontal Frequency (kHz)	Vertical Frequency (Hz)
720 x 400	31.468	70.080
640 x 480	31.469 37.500	59.940 75.000
800 x 600	37.879 46.875	60.317 75.000
1024 x 768	48.363 60.023	60.004 75.029
1024 x 768 (Only HDMI(PC))	56.476	70.069
1152 x 864	67.500	75.000
1280 x 720	45.000	60.000
1280 x 800	49.702	59.810
1280 x 1024	63.981 79.976	60.020 75.025
1400 x 1050	65.317	59.978
1440 x 900	55.935	59.887
1600 x 900	60.000	60.000
1680 x 1050	64.674 65.290	59.883 59.954
1920 x 1080	67.500	60.000

(Only 24/28/29MT45*)

Resolution	Horizontal Frequency (kHz)	Vertical Frequency (Hz)
720 x 400	31.468	70.080
640 x 480	31.469 37.500	59.940 75.000
800 x 600	37.879 46.875	60.317 75.000
1024 x 768	48.363 60.023	60.004 75.029
1280 x 800	49.702	59.810
1366 x 768	47.717	59.79

NOTE

- The optimal display resolution
  - 22MT45* : 1920 x 1080 @60Hz
  - 24/28/29MT45* : 1366 x 768 @60Hz
- The optimal timing in each mode is vertical frequency 60Hz.

HDMI (DTV) supported mode

Resolution	Horizontal Frequency (kHz)	Vertical Frequency (Hz)
720 x 480	31.469 31.500	59.940 60.000
720 x 576	31.250	50.000
1280 x 720	37.500 44.960 45.000	50.000 59.940 60.000
1920 x 1080	33.720 33.750 28.125 27.000 33.750 56.250 67.430 67.500	59.940 60.000 50.000 24.000 30.000 50.000 59.940 60.000

Component supported mode

Resolution	Horizontal Frequency (kHz)	Vertical Frequency (Hz)
720 x 480	15.730 15.750 31.470 31.500	59.940 60.000 59.940 60.000
720 x 576	15.625 31.250	50.000
1280 x 720	44.960 45.000 37.500	59.940 60.000 50.000
1920 x 1080	33.720 33.750 28.125 56.250 67.430 67.500	59.940 60.000 50.000 50.000 59.940 60.000

Component port connecting information

Component ports on the TV	Y	P_B	P_R

Video output ports on DVD player	Y	P_B	P_R
	Y	B-Y	R-Y
	Y	Cb	Cr
	Y	Pb	Pr

Make sure to read the Safety Precautions before using the product.
Keep the Owner's Manual (CD) in an accessible place for future reference.
The model and serial number of the TV is located on the back and one side of the TV. Record it below should you ever need service.

MODEL _____

SERIAL _____