LG
Life's Good

OWNER'S MANUAL

AIR CONDITIONER

Please read this manual carefully before operating your set and retain it for future reference.

TYPE : VENTILATOR

P/NO : MFL63284405

www.lg.com

TABLE OF CONTENTS

Safety Precautions.....3

Prior to Operation 6

Introduction 7

Operating Instructions (Accessory).....10

Electrical Safety 14

Characteristics 15

Maintenance and Service 17

Check Item prior to notify a failure 22

FOR YOUR RECORDS

Write the model and serial numbers here:

Model #

Serial #

You can find them on a label on the side of each unit.

Dealer's Name

Date Purchased

■ Staple your receipt to this page in the event you need it to prove date of purchase or for warranty issues.

READ THIS MANUAL

Inside you will find many helpful hints on how to use and maintain your ventilator properly. Just a little preventive care on your part can save you a great deal of time and money over the life of your Ventilator.

You'll find many answers to common problems in the chart of check item prior to notify a failure. If you review our chart of

Check item prior to notify a failure, you may not need to call for service at all.

PRECAUTION

- **Contact the authorized service technician for repair or maintenance of this unit.**
- **Contact the installer for installation of this unit.**
- **The ventilator is not intended for use by young children or invalids without supervision.**
- **Young children should be supervised to ensure that they do not play with the ventilator.**
- **When the power cord is to be replaced, replacement work shall be performed by authorized personnel only using only genuine replacement parts.**
- **Installation work must be performed in accordance with the National Electric Code by qualified and authorized personnel only.**



Safety Precautions

To prevent injury to the user or other people and property damage, the following instructions must be followed.

■ Incorrect operation due to ignoring instruction will cause harm or damage. The seriousness is classified by the following indications.

⚠WARNING	This symbol indicates the possibility of death or serious injury.
⚠CAUTION	This symbol indicates the possibility of injury or damage.

■ Meanings of symbols used in this manual are as shown below.

	**Be sure not to do.**
	**Be sure to follow the instruction.**

⚠WARNING

■ Installation

Do not use a defective or underrated circuit breaker. Use this appliance on a dedicated circuit.

- There is risk of fire or electric shock.

For electrical work, contact the dealer, seller, a qualified electrician, or an Authorized Service Center.

- Do not disassemble or repair the product. There is risk of fire or electric shock.

Always ground the product.

- There is risk of fire or electric shock.

Install the panel and the cover of control box securely.

- There is risk of fire or electric shock.

Always install a dedicated circuit and breaker.

- Improper wiring or installation may cause fire or electric shock

Use the correctly rated breaker or fuse.

- There is risk of fire or electric shock.

Do not modify or extend the power cable.

- There is risk of fire or electric shock.

Do not install, remove, or re-install the unit by yourself (customer).

- There is risk of fire, electric shock, explosion, or injury.

Be cautious when unpacking and installing the product.

- Sharp edges could cause injury. Be especially careful of the case edges and the fins on the condenser and evaporator.

For installation, always contact the dealer or an Authorized Service Center.

- There is risk of fire, electric shock, explosion, or injury.

Do not install the product on a defective installation stand.

- It may cause injury, accident, or damage to the product.

Do not let the ventilator run for a long time when the humidity is very high and a door or a window is left open.

- Moisture may condense and wet or damage furniture.

For re-installation of the installed product, always contact the dealer or an Authorized Service Center.

- There is risk of fire, electric shock, explosion or injury.

Do not open the maintenance cover of the main body during operation.

- Otherwise, it may cause electrical shock.

Use the outdoor air suction hole with the net installed to ensure that birds could not come in.

- Remove estrange things like the bird's nest. Otherwise, it may cause scarcity of indoor oxygen.

Install the air intake where polluted air can not be directly sucked in.

- It may cause various accidents, including suffocation, due to the suction of harmful gasses(CO, etc.)

Install the product a place that can support its weight.

- Otherwise, it may cause accident due to falling of the product.

■ Operation

Take care to ensure that power cable could not be pulled out or damaged during operation.

- There is risk of fire or electric shock.

Do not place anything on the power cable.

- There is risk of fire or electric shock.

Do not plug or unplug the power supply plug during operation.

- There is risk of fire or electric shock.

Do not touch(operate) the product with wet hands.

- There is risk of fire or electrical shock.

Do not place a heater or other appliances near the power cable.

- There is risk of fire and electric shock.

Do not allow water to run into electric parts.

- It may cause There is risk of fire, failure of the product, or electric shock.

Do not store or use flammable gas or combustibles near the product.

- There is risk of fire or failure of product.

When flammable gas leaks, turn off the gas and open a window for ventilation before turn the product on.

- Do not use the telephone or turn switches on or off.
  There is risk of explosion or fire

If strange sounds, or small or smoke comes from product. Turn the breaker off

- There is risk of electric shock or fire.

Stop operation and close the window in storm or hurricane. If possible, remove the product from the window before the hurricane arrives.

- There is risk of property damage, failure of product, or electric shock.

When the product is soaked (flooded or submerged), contact an Authorized Service Center.

- There is risk of fire or electric shock.

Be cautious that water could not enter the product.

- There is risk of fire, electric shock, or product damage.

Turn the breaker off when cleaning or maintaining the product.

• There is risk of electric shock.

When the product is not be used for a long time, disconnect the power supply plug or turn off the breaker.

• There is risk of product damage or failure, or unintended operation.

Avoid fire equipment

• There is risk of fire.

Don't touch a dedicated circuit or breaker with wet hands.

• There is risk of electric shock.

Use a firm stool or ladder when cleaning or maintaining the roduct.

• Be careful and avoid personal injury.

⚠ CAUTION

■ Installation

Use two or more people to lift and transport the product.

• Avoid personal injury.

Do not install the product where it will be exposed to sea wind (salt spray) directly.

• It may cause corrosion on the product. Corrosion, particularly on the condenser and evaporator fins, could cause product malfunction or inefficient operation.

■ Operation

Do not expose the skin directly to cool air for long periods of time. (Don't sit in the draft.)

• This could harm to your health.

Do not use the product for special purposes, such as preserving foods, works of art, etc. It is a consumer ventilator, not a precision refrigeration system.

• There is risk of damage or loss of property.

Use a soft cloth to clean. Do not use harsh detergents, solvents, etc.

• There is risk of fire, electric shock, or damage to the plastic parts of the product.

Do not step on or put anyting on the product. (outdoor units)

• There is risk of personal injury and failure of product.

Use a firm stool or ladder when cleaning or maintaining the product.

• Be careful and avoid personal injury.

Prior to Operation

Preparing for operation

1. Contact an installation specialist for installation.
2. Plug in the power plug properly.
3. Use a dedicated circuit.
4. Do not use an extension cord.
5. Do not start/stop operation by plugging/unplugging the power cord.
6. If the cord/plug is damaged, replace it with only an authorized replacement part.

Usage

1. Being exposed to direct airflow for an extended period of time could be hazardous to your health. Do not expose occupants, pets, or plants to direct airflow for extended periods of time.
2. Due to the possibility of oxygen deficiency, ventilate the room when used together with stoves or other heating devices.
3. Do not use this ventilator for non-specified special purposes (e.g. preserving precision devices, food, pets, plants, and art objects). Such usage could damage the items.

Cleaning and maintenance

1. Do not touch the metal parts of the unit when removing the filter. Injuries can occur when handling sharp metal edges.
2. Do not use water to clean inside the ventilator. Exposure to water can destroy the insulation, leading to possible electric shock.
3. When cleaning the unit, first make sure that the power and breaker are turned off. The fan rotates at a very high speed during operation. There is a possibility of injury if the unit's power is accidentally triggered on while cleaning inner parts of the unit.

Service

For repair and maintenance, contact your authorized service dealer.

Introduction

Symbols used in this Manual

This symbol alerts you to the risk of electric shock.

This symbol alerts you to hazards that could cause harm to the ventilator.

NOTICE **This symbol indicates special notes.**

Features

WARNING: This appliance should be installed in accordance with national wiring regulations. This guide acts as a guide to help to explain product features.

Models: LZ-H015GBA2

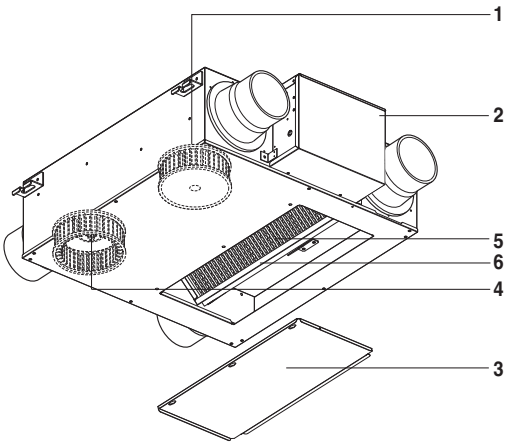

1. Blower for Supply Air
A blower for sucking outside air.
2. Control Box
3. Blower for Exhaust Air
A blower for draining polluted air outside.
4. Maintenance cover
5. Total Heat Exchanger
Exchanges temperature and moisture between air supply air and exhaust air.
6. Air Filter
Prevents clogging of the Total heat exchanger due to dust.

❊ The figure of Total Heat Exchanger can be different by the product model.

Models: LZ-H025GBA2 / LZ-H035GBA2

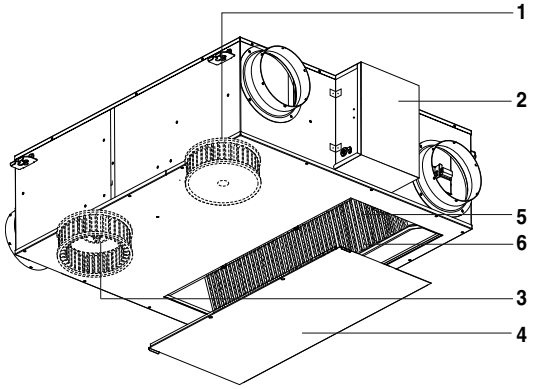

1. Blower for Supply Air
A blower for sucking outside air.
2. Control Box
3. Blower for Exhaust Air
A blower for draining polluted air outside.
4. Maintenance cover
5. Total Heat Exchanger
Exchanges temperature and moisture between air supply air and exhaust air.
6. Air Filter
Prevents clogging of the Total heat exchanger due to dust.

❈ The figure of Total heat Exchanger can be different by the Product Model.

Models: LZ-H050GBA2

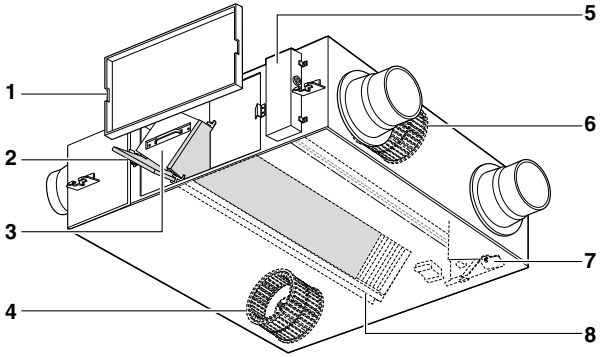

1. Maintenance Cover
2. Air Filter
It prevents dust from clogging in Total Heat Exchanger.
3. Total Heat Exchanger
It changes temperature and humidity between Supplying Air and exhausted air.
4. Blower for Exhaust Air
It is a fan for discharging the contaminated air to outdoor.
5. Control box
6. Blower for Supply Air
It is a fan for inhaling exterior air into an indoor space.
7. Damper plate(board)
It converts exchanging mode between total heat ventilation and general ventilation.
8. Total Heat Exchanger holder
It is used in guiding for the installation of Total Heat Exchanger.

❈ The figure of Total heat Exchanger can be different by the Product Model.

Models: LZ-H080GBA2 / LZ-H100GBA2

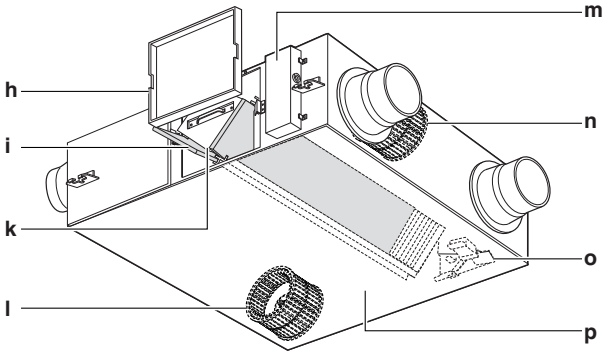

1. Maintenance Cover
2. Air Filter
It prevents dust from clogging in Total Heat Exchanger.
3. Total Heat Exchanger
It changes temperature and humidity between Supplying Air and exhausted air.
4. Blower for Exhaust Air
It is a fan for discharging the contaminated air to outdoor.
5. Control box
6. Blower for Supply Air
It is a fan for inhaling exterior air into an indoor space.
7. Damper plate(board)
It converts exchanging mode between total heat ventilation and general ventilation.
8. Total Heat Exchanger holder
It is used in guiding for the installation of Total Heat Exchanger.

❈ The form of Total Heat Exchanger varies according to models.

Models: LZ-H150GBA2 / LZ-H200GBA2

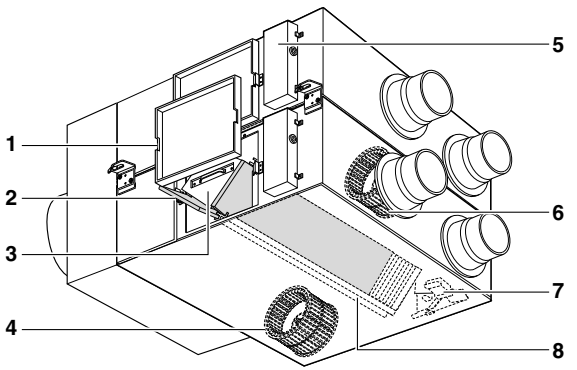

1. Maintenance Cover
2. Air Filter
It prevents dust from clogging in Total Heat Exchanger.
3. Total Heat Exchanger
It changes temperature and humidity between Supplying Air and exhausted air.
4. Blower for Exhaust Air
It is a fan for discharging the contaminated air to outdoor.
5. Control box
6. Blower for Supply Air
It is a fan for inhaling exterior air into an indoor space.
7. Damper plate(board)
It converts exchanging mode between total heat ventilation and general ventilation.
8. Total Heat Exchanger holder
It is used in guiding for the installation of Total Heat Exchanger.

❈ The form of Total Heat Exchanger varies according to models.

Operating Instructions (Accessory)

LCD Remote Controller (PQRCVSL0 / PQRCVSL0QW)

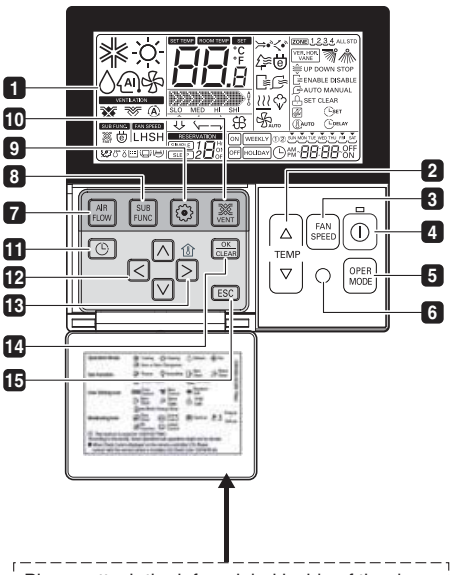

1. **OPERATION INDICATION SCREEN**
2. **SET TEMPERATURE BUTTON**
3. **FAN SPEED BUTTON**
4. **ON/OFF BUTTON**
5. **OPERATION MODE SELECTION BUTTON**
6. **WIRELESS REMOTE CONTROLLER RECEIVER**
   - Some products don't receive the wireless signals.
7. **AIR FLOW BUTTON**
8. **SUBFUNCTION BUTTON**
9. **FUNCTION SETTING BUTTON**
10. **VENTILATION BUTTON**
11. **RESERVATION**
12. **UP, DOWN, LEFT, RIGHT BUTTON**
    - To check the indoor temperature, press button.
13. **ROOM TEMPERATURE BUTTON**
14. **SETTING/CANCEL BUTTON**
15. **EXIT BUTTON**

✻ Some functions may not be operated and displayed depending on the product type.

Method to Operate and Select Air Volume – Interlinked Operation with Ventilation.

It is used when air conditioner is interlinked with ventilation product.
It is a function that cools and refreshes indoor air using the ventilation product at the same time operating the air conditioning function.

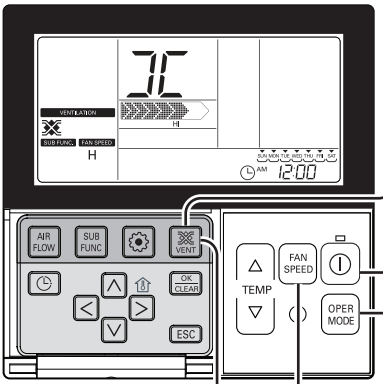

Ventilation interlinked operation

1 Press VENT button on the remote controller control panel.
- It is only used when air conditioner and general ventilation is interlinked.



2 Pressing 'Start/Stop' button at ventilation mode will start ventilation.

3 Pressing OPER MODE button will change the ventilation operation mode.
Pressing operation selection button will change the mode in the order of 'Heat exchange ' normal ' automatic'
❊ It only displays on the remote controller display when it is in ventilation mode, and it displays the desired temperature when it returns to air condition mode.



4 Pressing FAN SPEED button in general ventilation mode will change airflow speed.
Pressing airflow speed button will change the mode in the order of 'weak ' strong ' extra strong'.
If CO2 sensor is installed, it can select from 'weak ' strong ' very strong ' automatic'.



5 Changing back to air conditioner mode
1)Automatic Conversion : when no button is pressed for 15 seconds or longer, it automatically converts back to air conditioner mode.
2) Manual Conversion : Pressing VENT button in ventilation mode will manually convert.

Method to Operate and Select Air Volume –Ventilation Single Operation

It is a function to cool and refresh the indoor air using general ventilation product..

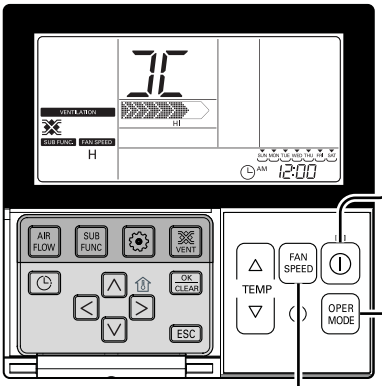

Ventilation single operation

1 Press (⏻) button on the remote controller.



2 Pressing OPER MODE button will change the ventilation mode.



Ventilation mode	Remote Controller Display	Contents
Heat exchange	JC	Circulate indoor air without loss of heat
Normal	C]	Directly circulate indoor air without going through heat exchanger
Automatic	AU	Circulate indoor air with automatically comparing indoor and outdoor air

3 Pressing FAN SPEED button will change the strength of the wind
- Pressing the button can select from 'weak → strong → very strong'.
- If CO2 sensor is installed, it can select from 'weak → strong → very strong → automatic'.



Fast/Energy saving ventilation mode

It is a function to operate ventilation function more efficiently through the ventilation additional functions, fast / power saving settings.

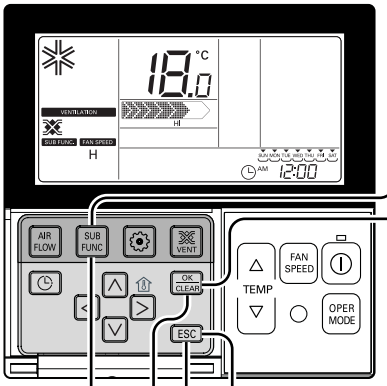

Fast : ventilates fast

1 Press SUB FUNC button in ventilation mode.
- It converts in the order of 'fast → power saving' in ventilation mode.



2 'Fast' is blinking on the display, and pressing OK CLEAR button will stabilize 'fast' icon, and the function is set.

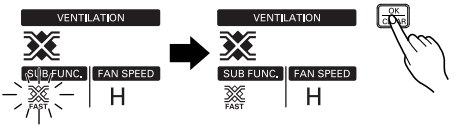

3 Pressing ESC button will exit the settings.



Power Saving : efficiently ventilates and performs power savings.

1 Press SUB FUNC button in ventilation mode.
- It converts in the order of 'fast → power saving' in ventilation mode.



2 'Power Saving' is blinking on the display, and pressing OK CLEAR button will stabilize 'Power Saving' icon, and the function is set.

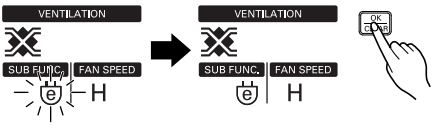

3 Pressing ESC button will exit the settings.



❊ General ventilation and direct expansion ventilation have the same additional functions.

❊ Ventilation/Heater/Humidifier additional function settings are the same as air conditioner.

Electrical Safety

WARNING: This appliance must be properly grounded.

To minimize the risk of electric shock, you must alway plug into a grounded outlet.

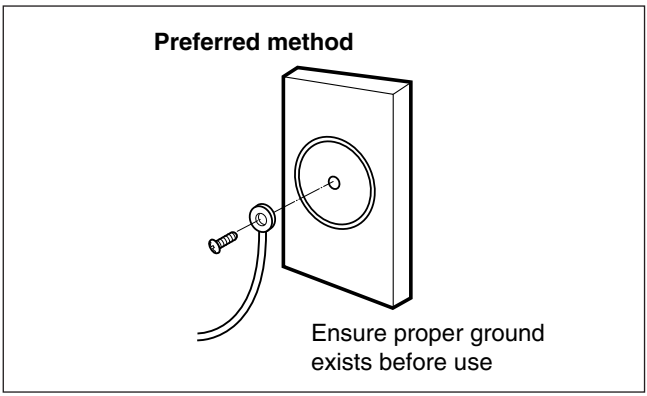

WARNING: Do not cut or remove the grounding prong from the power wire.

WARNING: Attaching the adapter ground terminal to the wall receptacle cover screw does not ground the appliance unless the cover screw is metal and not insulated, and the wall receptacle is grounded through the house wiring.

WARNING: If you have any doubt whether the ventilator is properly grounded, have the wall receptacle and circuit checked by a qualified electrician.

Characteristics

Ventilation via Total Heat Exchanger

Exhausts indoor air via the Total Heat Exchanger outdoor.

• The outdoor air heat exchanged is supplied to indoor. Operate the ventilator in the **Ventilation via Total heat exchanger** in summer/winter when cool/heat operation is done.

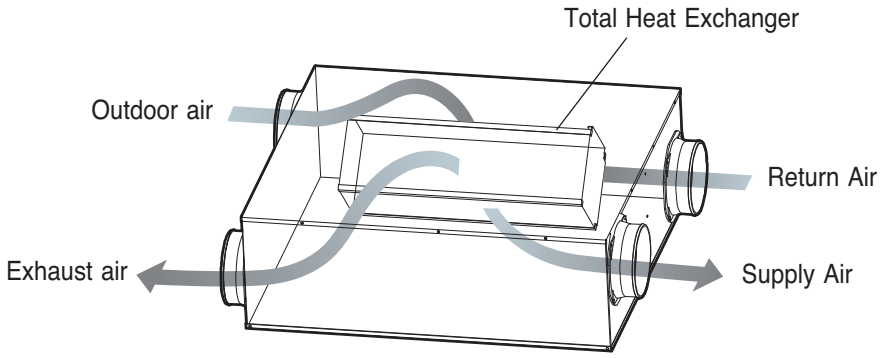

Ventilation via Total Heat Exchanger

Exhausts indoor air via the Total Heat Exchanger outdoor.

• The outdoor air heat exchanged is supplied to indoor. Operate the ventilator in the **Ventilation via Total heat exchanger** in summer/winter when cool/heat operation is done.

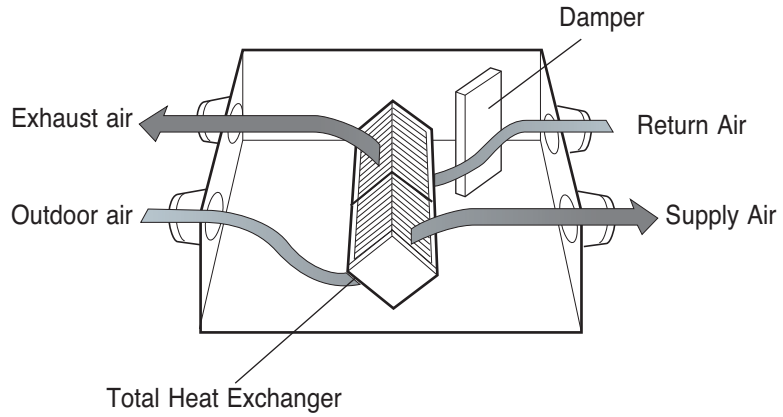

Normal Ventilation

Exhausts the polluted indoor-air directly without via the Total Heat Exchanger.

• Operate the ventilator in the **Normal Ventilation** in spring/autumn when the Total heat exchanger is not required.

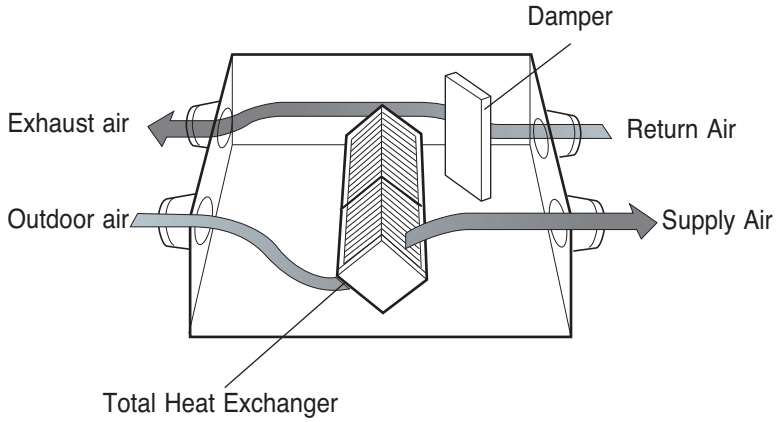

CAUTION: In case of high outdoor pollution degree like yellow sand please pause the ventilator.

Maintenance and Service

Handling and Cleaning

To prevent function of the ventilator deteriorating, clean dust adhered to the air filter and total heat exchanger regularly.

Cleaning Cycle

- Air filter: More than once every 6 months.
- Total heat exchanger: More than once every 2 years (Cleaning cycle may increase according to pollution degree.)

Method to take each part out
Model: LZ-H015GBA2 / LZ-H025GBA2 / LZ-H035GBA2

1. Remove the maintenance cover.

Put the hands inside of the ceiling from the maintenance cover, and pull the maintenance cover up. (Looser the hinge and detach the maintenance cover.)

2. Take the air filter out.

Take the air filter with each contained to the left/right downside of the Total heat exchanger.

❉ If it adheres to the ceiling in reverse, it is equal to the left/right topside of the Total heat exchanger.

CAUTION: Take care to ensure that you could not damage when taking the air filter out since there is a sharp part on it.

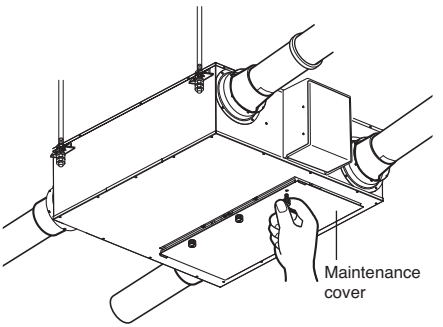

3. Take the Total heat exchanger out.

Catch the handle and then take the Total heat exchanger out from the main body. (2 units)

WARNING: Turn the breaker off when cleaning the product.

CAUTION: Gloves should be worn when doing the maintenance work.

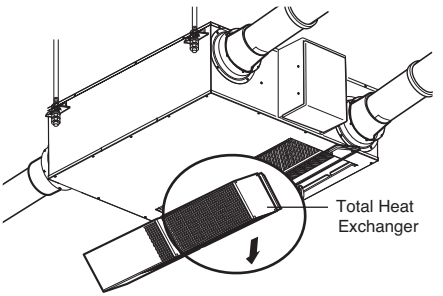

Model: LZ-H050GBA2 / LZ-H080GBA2 / LZ-H100GBA2

1. Remove the maintenance cover.

Put the hands inside of the ceiling from the maintenance cover, and pull the maintenance cover up.
(Looser the hinge and detach the maintenance cover.)

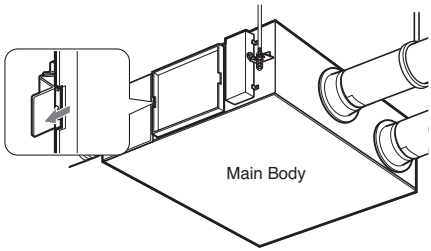

2. Take the air filter out.

Take the air filter with each contained to the left/right downside of the Total heat exchanger.

❊ If it adheres to the ceiling in reverse, it is equal to the left/right topside of the Total heat exchanger.

CAUTION: Take care to ensure that you could not damage when taking the air filter out since there is a sharp part on it.

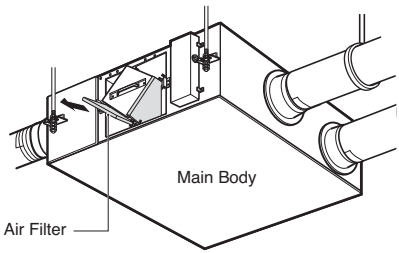

3. Take the Total heat exchanger out.

Catch the handle and then take the Total heat exchanger out from the main body. (2 units)

WARNING: Turn the breaker off when cleaning the product.

CAUTION: Gloves should be worn when doing the maintenance work.

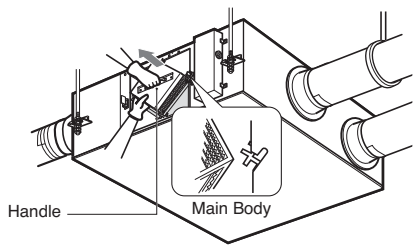

Model: LZ-H150GBA2 / LZ-H200GBA2

1. Remove the maintenance cover.

Put the hands inside of the ceiling from the maintenance cover, and pull the maintenance cover up. (Looser the hinge and detach the maintenance cover.)

2. Take the air filter out.

Take the air filter with each contained to the left/right downside of the Total heat exchanger.

❊ If it adheres to the ceiling in reverse, it is equal to the left/right topside of the Total heat exchanger.

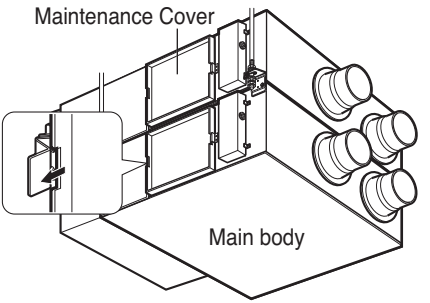

CAUTION: Take care to ensure that you could not damage when taking the air filter out since there is a sharp part on it.

3. Take the Total heat exchanger out.

Catch the handle and then take the Total heat exchanger out from the main body. (2 units)

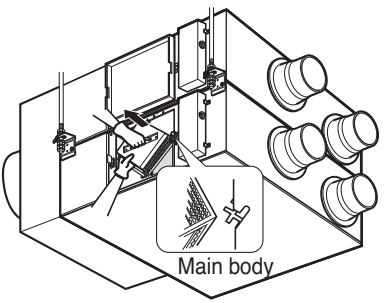

WARNING: Turn the breaker off when cleaning the product.

CAUTION: Gloves should be worn when doing the maintenance work.

Method to Clean and Replace Each Part

1. Cleaning of Air Filter

Clean once every 6 months.

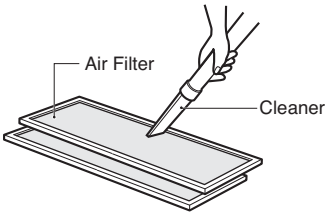

- Clean dirt from the air filter using a vacuum cleaner or washing with water.
  (if dirt is conspicuous, wash with a neutral detergent in lukewarm water)
- After washing with water, dry well in the shade.
  (Do not expose the air filter to direct sunlight or heat from a fire when drying it)
- If the air filter is damaged, purchase it from the service center or professional agent.

2. Cleaning of Total Heat Exchanger

Suck dusts adhered to the surface of the Total heat exchanger with a cleaner.

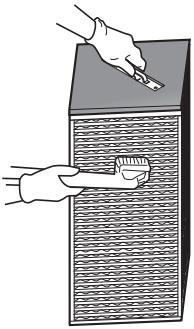

- Use the cleaner that attached to brush at its nozzle, and use a soft brush.
- Do not use a hard nozzle on the cleaner.
  (Otherwise, surface of the Total heat exchanger may be damaged.)
- Never wash the Total heat exchanger with water.
- Replacement expenses are for a consideration after 2 years from the purchasing date.
- Expenses are for a consideration when you will contact the service center even within 2 years from the purchasing date.
- For service, always contact the dealer or an Authorized Service Center.



Air Filter

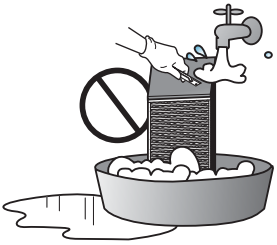

Total Heat Exchnger

Assembly and Check after Maintenance

1. Assembly of Total heat exchanger

Securely put the corner parts (4 or 6 parts) of the Total heat exchanger into the holder for assembly and slide them into the inside of the main body.

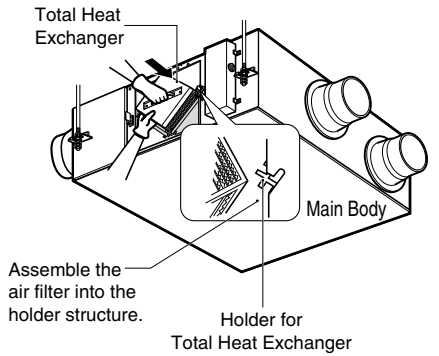

2. Assembly of air filter

Assemble the air filter into the holder structure of the Total heat exchanger.

- Take care to ensure that surface of the Total heat exchanger could not be damaged.
- Dusts adhered to the Total heat exchanger may cause deterioration of Air volume.

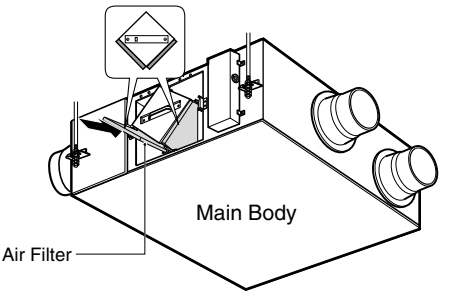

3. Assembly of maintenance cover

Fix the cover to the right hinge and fix it to the left side. (A nameplate is adhered toward the reading direction).

WARNING: Turn the breaker off when cleaning the product.

CAUTION: Gloves should be worn when doing the maintenance work.

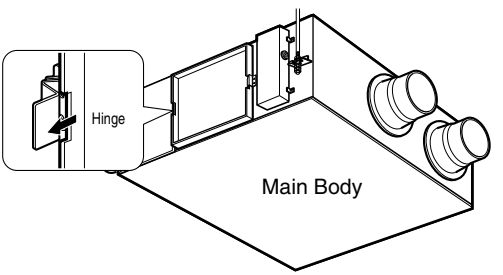

Check Item prior to notify a failure

Symptom	Check Item	Counter-measure
The Product doesn't work	Is power not supplied?	Supply Power
The Product doesn't work through you press the 'ON' switch	Is Air Filter, Total heat exchanger clogged severely?	Follow cleaning and changing method.
	Is the Indoor temperature less than -10°c or more than 45°C?	It's standby mode for protecting Total Heat Exchanger.
Even though you change the fan speed, the operation mode doesn't change and it changes to 'Auto or Low'	Is the Indoor temperature less than -10°C or more than 45°C?	It's operation mode to protect Total Heat Exchanger.

Details of LG serial No.



1 2 3 4 5 6 7 8 9 10

Code	Detail	Code of Model	Meaning
1	Year	0~9 (Digit)	The last digit of year ex) 1997 → 7, 2000 → 0
2,3	Month	01~12 (Digit)	Month ex) March → 03, August → 08
4	Nation	A~Z (Alphabet)	Where manufactured ex) K → Korea, C → China
5	Product	A~Z (Alphabet)	ex) A → Airconditioner
6~10	Serial No.	0~9 (Digit)	Production Quantity

Main Service Part List

NO	PART NAME
1	COMPRESSOR
2	MOTOR
3	MAIN PCB ASSY
4	REMOCON
5	TRANSFORMER

H. G. IBRAHIM SHAKER COMPANY, LTD.
SERVICE CENTER

* JEDDAH → P. O. BOX 50, JEDDAH 21411 KINGDOM OF SAUDI ARABIA
TEL NO. : 6422952 / 6425527

* RIYADH P. O. BOX 15, RIYADH 11411 KINGDOM OF SAUDI ARABIA
TEL NO. : 4020570

* AL-KHOBAR → P. O. BOX 78, AL-KHOBAR 31952 KINGDOM OF SAUDI ARABIA
TEL NO. : 8943714