LG
Life's Good

OWNER'S MANUAL

IPS LED MONITOR (LED MONITOR*)

* LG LED Monitors are LCD Monitors with LED Backlighting.

Please read the safety information carefully before using the product.

34UC87
34UC87M
34UC87C

www.lg.com

ENGLISH

TABLE OF CONTENTS

3 LICENSE

4 ASSEMBLING AND PREPARING

4 Product Composition
5 Product and Button Description
5 - How to Use the Joystick Button
6 - Input Connector
7 Moving and Lifting the Monitor
8 Installing the Monitor
8 - Assembling the Stand
9 - Installing on a Table
9 - Adjusting the Stand Height
10 - Adjusting the Angle
11 - Tidying up Cables
11 - Using the Kensington Lock
12 - Installing on the Wall

14 USING THE MONITOR

14 Connecting to a PC
14 - HDMI Connection
15 - DisplayPort Connection
15 - Thunderbolt (⚡) Connection
16 Connecting AV Devices
16 - HDMI Connection
16 Connecting Peripherals
16 - USB Cable connection - PC
17 - Connecting Headphones
18 - IR Connection

19 USER SETTINGS

19 Activating the Main Menu
19 - Main Menu Features
20 User Settings
20 - Menu Settings
21 - Ratio
22 - Function
24 - PBP
26 - Picture
27 - Color
28 - Settings
29 - Reset

30 TROUBLESHOOTING

32 PRODUCT SPECIFICATION

34 Factory Support Mode
34 HDMI Timing (Video)
34 Power LED

35 PROPER POSTURE

35 Proper Posture for Using the Monitor

LICENSE

Each model has different licenses. Visit *www.lg.com* for more information on the license.

The terms HDMI and HDMI High-Definition Multimedia Interface, and the HDMI logo are trademarks or registered trademarks of HDMI Licensing LLC in the United States and other countries.

VESA, VESA logo, DisplayPort compliance logo and DisplayPort compliance logo for dual-mode source devices are all registered trademarks of the Video Electronics Standards Association.

MaxxAudio and additional MAXX trademarks are trademarks and/or registered trademarks of Waves Audio Ltd.

ENGLISH

ASSEMBLING AND PREPARING

Product Composition

Please check whether all the components are included in the box before using the product. If there are any missing components, contact the retailer where you purchased the product. Note that the product and related components may look different from those shown here.

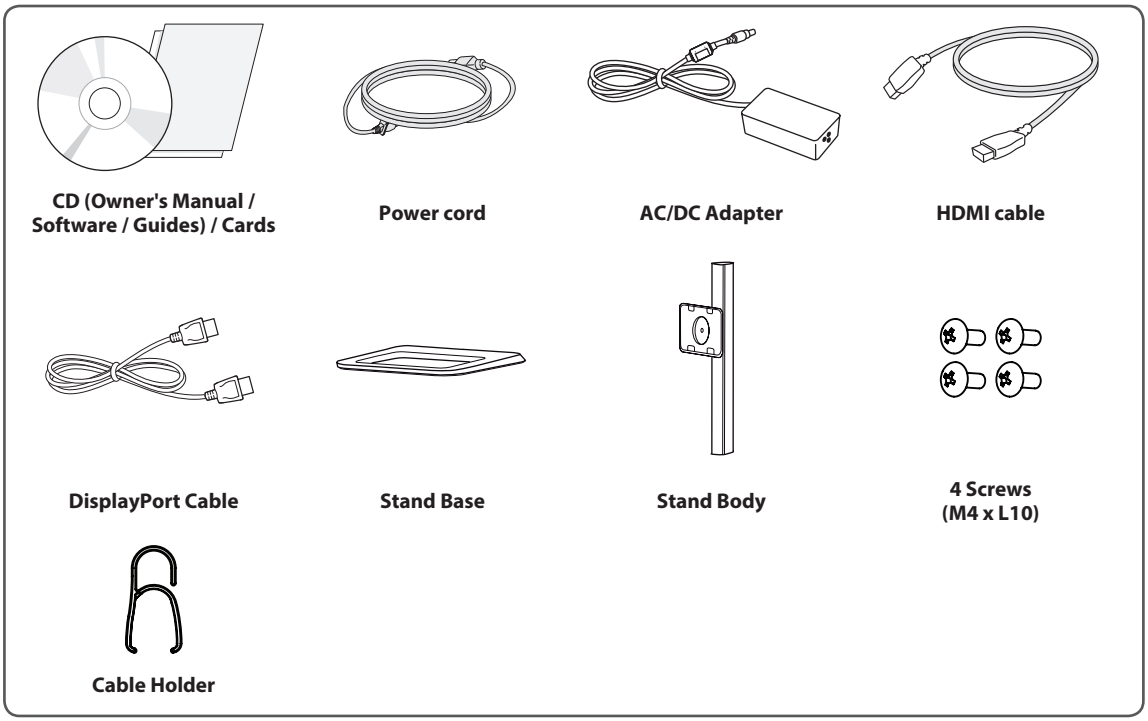

CAUTION

- Always use genuine LG components to ensure safety and product performance.
- The product warranty will not cover damage or injury caused by the use of unauthorized components.
- Use the supplied components.
- If you use generic cables not certified by LG, the screen may not display or there may be image noise.

NOTE

- The components may look different from those illustrated here.
- Without prior notice, all product information and specifications contained in this manual are subject to change to improve the performance of the product.
- To purchase optional accessories, visit an electronics store, an online shopping site, or contact the retailer from which you purchased the product.
- The power cord provided may differ, depending upon the region.

Product and Button Description

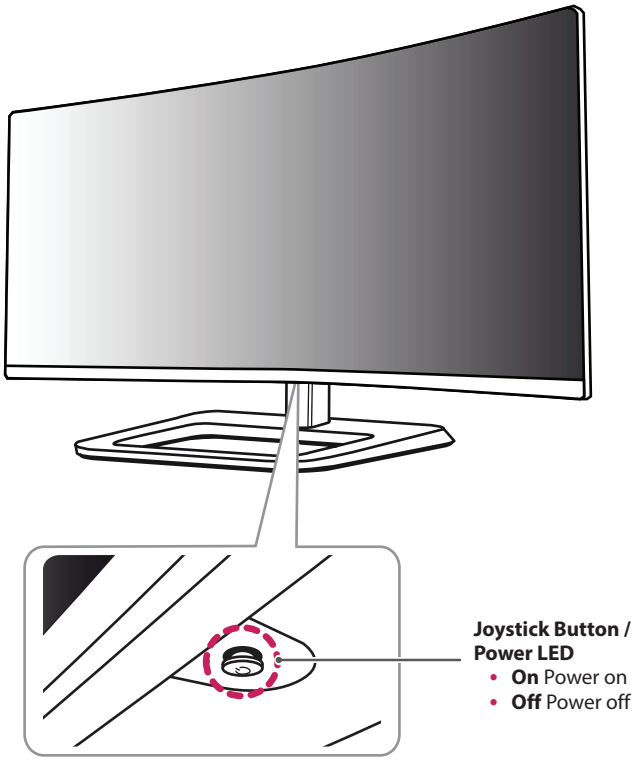

How to Use the Joystick Button

You can easily control the functions of the monitor by pressing the joystick button or moving it left/right with your finger.

Basic Functions

	⏻	**Power on**	Press the joystick button once with your finger to turn on the monitor.
		Power off	Press and hold the joystick button once with your finger to turn off the monitor.
	◀/▶	**Volume Control**	You can control the volume by moving the joystick button left/right.

NOTE

- The joystick button is located at the bottom of the monitor.
- Before turning on the monitor, please make sure that the DC switch on the rear side of product is ON.

Input Connector

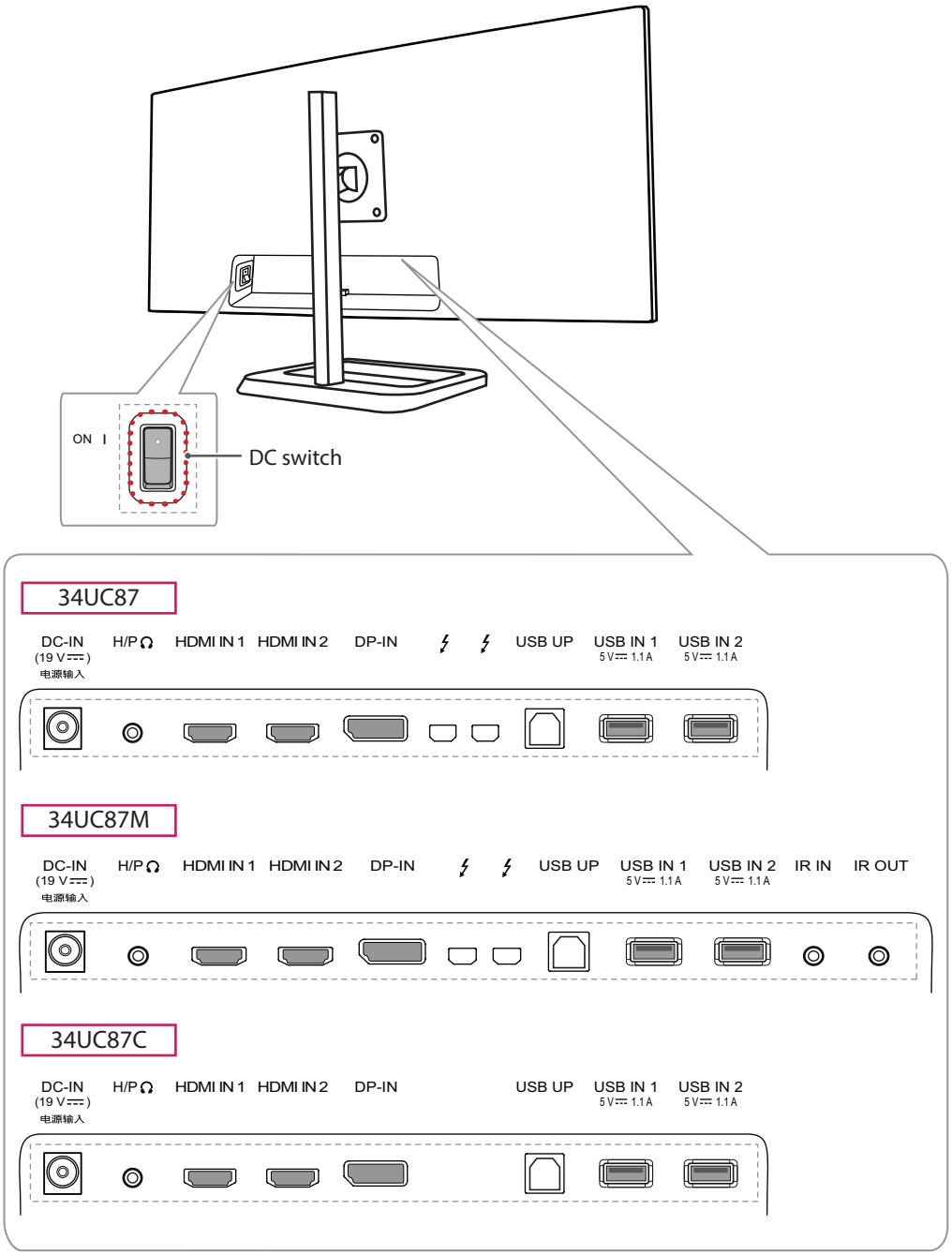

Moving and Lifting the Monitor

When moving or lifting the monitor, follow these instructions to prevent the monitor from being scratched or damaged and to ensure safe transportation, regardless of its shape or size.

- Place the monitor in the original box or packing material before attempting to move it.
- Before moving or lifting the monitor, disconnect the power cord and all other cables.
- Hold the bottom and side of the monitor frame firmly. Do not hold the panel itself.

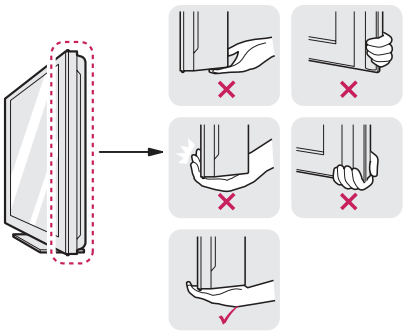

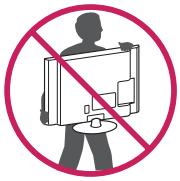

- When holding the monitor, the screen should face toward you to prevent it from being scratched.
- When transporting the monitor, do not expose the monitor to shock or excessive vibration.
- When moving the monitor, keep it upright and never turn the monitor on its side or tilt it sideways.

CAUTION

- Avoid touching the monitor screen as much as possible.
  - This may result in damage to the screen or some of the pixels used to create images.

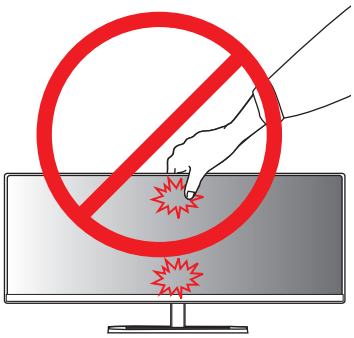

- If you use the monitor panel without the stand base, its joystick button may cause the monitor to become unstable and fall, resulting in damage to the monitor or personal injury. In addition, this may cause the joystick button to malfunction.

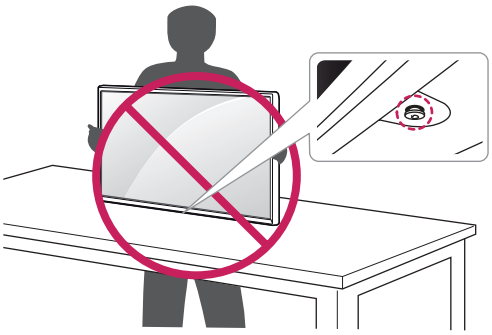

ENGLISH

Installing the Monitor

Assembling the Stand

1

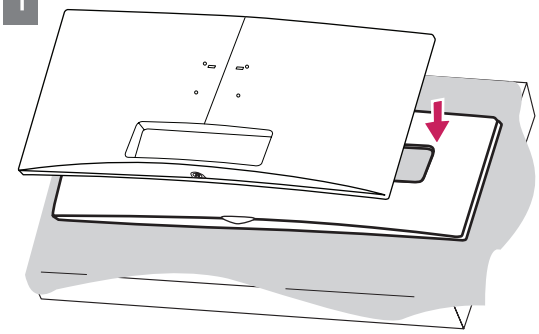

CAUTION

- To protect the screen, place the screen face down on the screen pad which is inside the box.

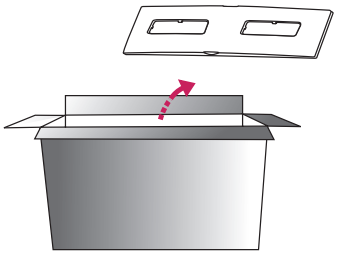

2

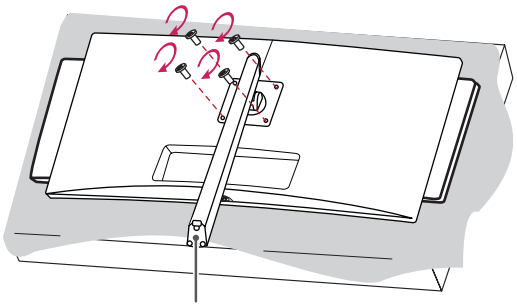

3

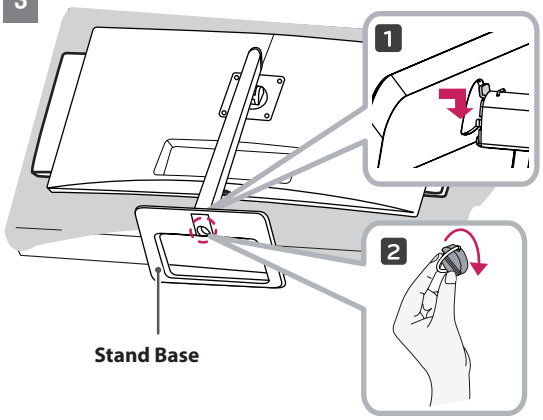

CAUTION

- Illustrations in this document represent typical procedures, so they may look different from the actual product.
- Applying excessive force when tightening screws may cause damage to the monitor. Damage caused in this way will not be covered by the product warranty.
- When tightening the screws after mounting the stand base onto the stand body, be sure to hold the stand base with your hand. Otherwise, the product may fall, causing personal injury or damage to the product.
- Do not carry the monitor upside down by just holding the base. This may cause the monitor to fall off the stand and could result in personal injury.
- When lifting or moving the monitor, do not touch the monitor screen. The force applied to the monitor screen may cause damage to it.

NOTE

- You can disassemble the stand in the reverse order of the assembly.

Installing on a Table

1 Lift the monitor and place it on the table in an upright position. Place the monitor at least 10 cm away from the wall to ensure sufficient ventilation.

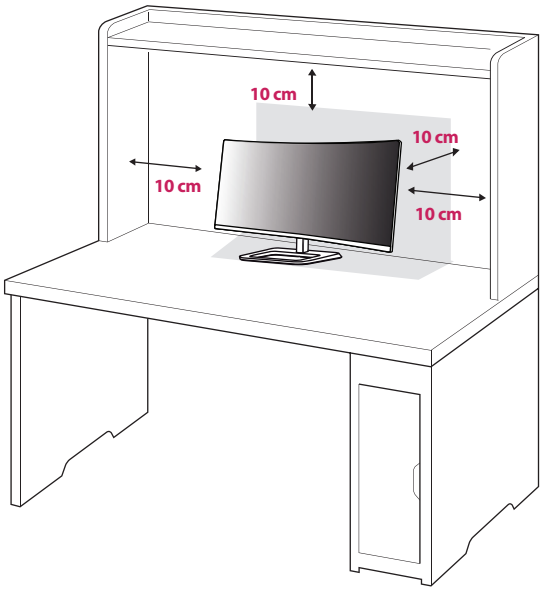

2 Connect the power adapter to the monitor and then plug the power cord into the wall outlet.

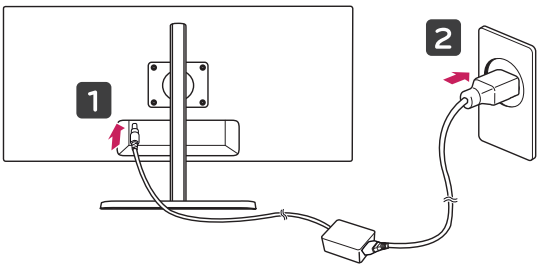

3 Press the joystick button on the bottom of the monitor to turn on the monitor.

CAUTION

- Unplug the power cord before moving or installing the monitor. There is risk of electric shock.

Cautions When Connecting Power Cord

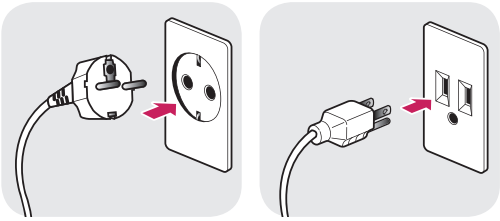

100-240 V ~

- Make sure to use the power cord that is provided in the product package and connect it to a grounded power outlet.
- If you need another power cord, please contact your local dealer or the nearest retail store.

Adjusting the Stand Height

1 Place the monitor mounted on the stand base in an upright position.

2 Push the head downward and pull out the locking pin.

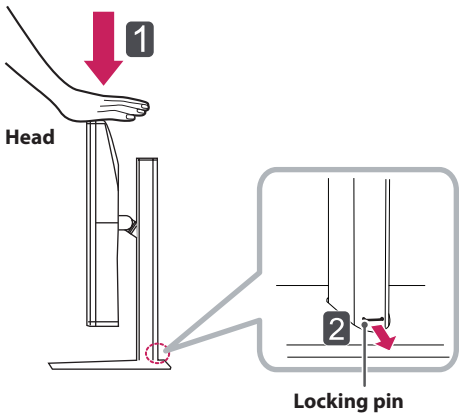

3 Handle the monitor with both hands for safety.

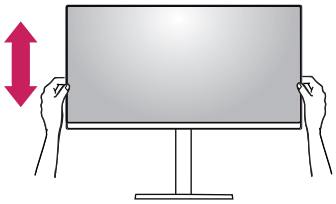

4 The height can be adjusted up to **140.0 mm**.

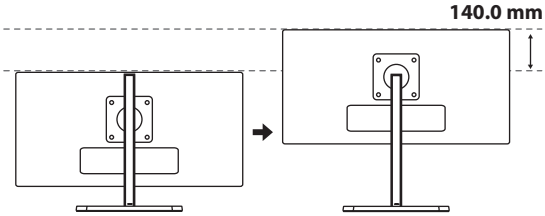

CAUTION

- Once the pin is removed, it is not necessary to re-insert it to adjust the height.

WARNING

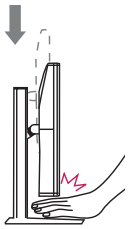

- Do not put your fingers or hand between the screen and the base (chassis) when adjusting the screen's height.

Adjusting the Angle

1 Place the monitor mounted on the stand base in an upright position.

2 Adjust the angle of the screen. The angle of the screen can be adjusted forward or backward from -5° to 15° for a comfortable viewing experience.

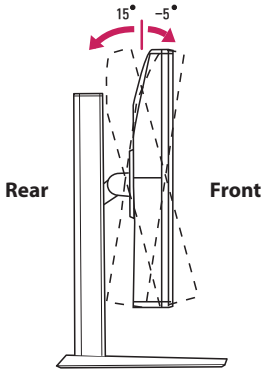

WARNING

- To avoid injury to the fingers when adjusting the screen, do not hold the lower part of the monitor's frame as illustrated below.

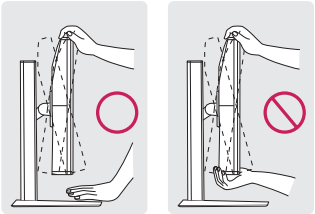

- Be careful not to touch or press the screen area when adjusting the angle of the monitor.

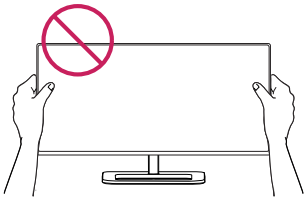

Tidying up Cables

Arrange the cables using the cable holder as shown in the illustration.

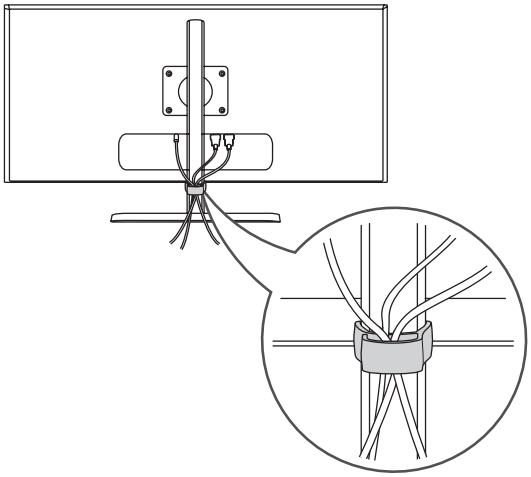

Using the Kensington Lock

The connector for the Kensington security system is located at the bottom of the monitor.
For more information on installation and usage, refer to the Kensington lock owner's manual or visit the website at *http://www.kensington.com*.

Connect the monitor to a table using the Kensington security system cable.

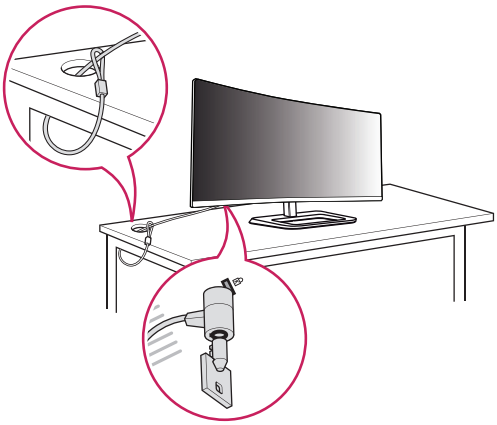

NOTE

- The Kensington security system is optional. You can obtain optional accessories from most electronics stores.

Installing on the Wall

Install the monitor at least 10 cm away from the wall and leave about 10 cm of space at each side of the monitor to ensure sufficient ventilation. Detailed installation instructions can be obtained from your local retail store. Alternatively, refer to the manual for how to install and set up a tilting wall mounting bracket.

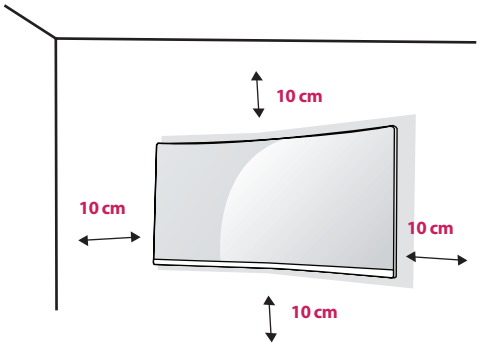

To install the monitor to a wall, attach a wall mounting bracket (optional) to the back of the monitor.
Make sure that the wall mounting bracket is securely fixed to the monitor and to the wall.

1 If you use screws longer than the standard length, it may damage the inside of the product.
2 A non-VESA standard screw may damage the product and cause the monitor to fall. LG Electronics is not liable for any accidents relating to the use of non-standard screws.

Wall Mount (A x B)	100 x 100
Stand Screw	M4 x L10
Required Screws	4
Wall Mount Plate (Optional)	RW120 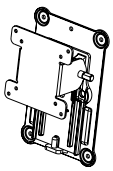

- Wall Mount (A x B)

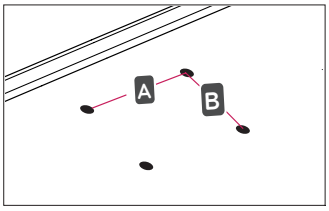

NOTE

- Use the screws specified by VESA standards.
- The wall mount kit includes the installation guide and all necessary parts.
- The wall mounting bracket is optional. You can obtain optional accessories from your local dealer.
- The length of the screw may differ for each wall mounting bracket. Be sure to use the proper length.
- For more information, please refer to the user manual for the wall mounting bracket.

CAUTION

- Unplug the power cord before moving or installing the monitor to avoid electric shock.
- Installing the monitor on the ceiling or on a slanted wall may result in the monitor falling off, which could lead to injury. Use an authorized LG wall mount and contact the local dealer or qualified personnel.
- Applying excessive force when tightening screws may cause damage to the monitor. Damage caused in this way will not be covered by the product warranty.
- Use the wall mounting bracket and screws that conform to VESA standards. Damage caused by the use or misuse of inappropriate components will not be covered by the product warranty.
- When measured from the back of the monitor, the length of each installed screw must be 8 mm or less.

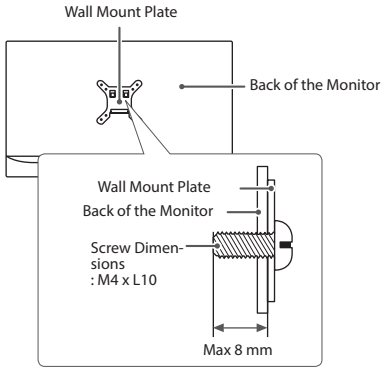

ENGLISH

USING THE MONITOR

- The following instructions are based on the 34UC87 model. Illustrations in this manual may differ from the actual product.

Press the joystick button, go to Menu → Easy control → Input, and then select the input option.

CAUTION

- Do not press the screen for a prolonged time. This may cause image distortion.
- Do not display a still image on the screen for a prolonged time. This may cause image retention. Use a screensaver if possible.

NOTE

- When connecting the power cord to the outlet, use a grounded (3-hole) power strip or a grounded power outlet.
- The monitor may flicker when turned on in an area where the temperature is low. This is normal.
- Sometimes red, green, or blue spots may appear on the screen. This is normal.

Connecting to a PC

- This monitor supports the *Plug and Play feature.

* Plug and Play: A feature that allows you to add a device to your computer without having to reconfigure anything or install any manual drivers.

HDMI Connection

Transmits digital video and audio signals from your PC to the monitor. Connect your PC to the monitor using the HDMI cable as shown in the illustration below.

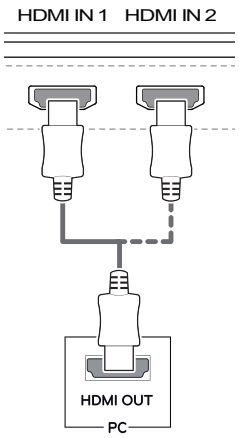

CAUTION

- Make sure to use the supplied HDMI cable of the product. Otherwise, this may cause the device to malfunction.
- Connecting your PC to the monitor using the HDMI cable may cause device compatibility issues.
- Using a DVI to HDMI / DP (DisplayPort) to HDMI cable may cause compatibility issues.
- Use a certified cable with the HDMI logo attached. If you do not use a certified HDMI cable, the screen may not display or a connection error may occur.
- Recommended HDMI cable types
  - High-Speed HDMI®/™ Cable
  - High-Speed HDMI®/™ Cable with Ethernet

DisplayPort Connection

Transmits digital video and audio signals from your PC to the monitor. Connect the monitor to your PC using the display port cable as shown in the illustration below:

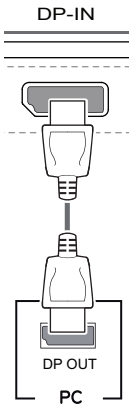

NOTE

- There may be no video or audio output depending upon the DP (DisplayPort) version of the PC.
- Make sure to use the supplied DisplayPort cable of the product. Otherwise, this may cause the device to malfunction.
- For using Mini DP to DP (Mini DisplayPort to DisplayPort) cable, it is recommended that you use DisplayPort 1.2 cable.

Thunderbolt (⚡) Connection

You can connect your high-resolution display or high-performance data device to the monitor via a Thunderbolt port. Connect your external device to the monitor using the Thunderbolt cable as illustrated below.

34UC87 | 34UC87M

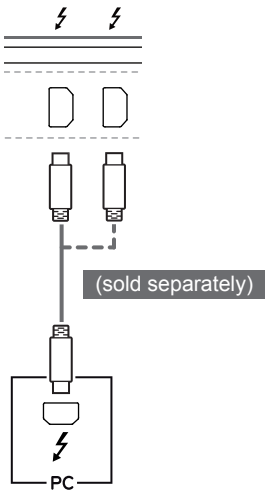

NOTE

- The maximum data transmission rate of each port is 20 Gb/s.
- Make sure to use a Thunderbolt (⚡) certified cable. Otherwise, this may cause the device to malfunction.
- Thunderbolt (⚡) is supported in such environments as Windows 7, Windows 8.1, and Mac product.
- In accordance with Mac products may not support the recommended resolution or the some features. For more information, refer to the support information card of the Mac which is provided separately.
- The ability to set up dual monitors using the Thunderbolt (⚡) and daisy-chaining technology depends on the performance of your video card.

Connecting AV Devices

HDMI Connection

HDMI transmits digital video and audio signals from your AV device to the monitor. Connect your AV device to the monitor using the HDMI cable as shown in the illustration below.

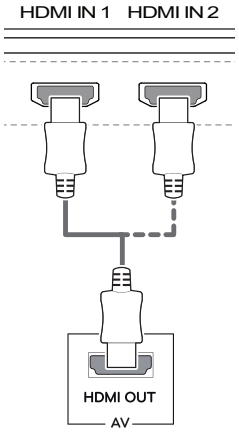

NOTE

- Make sure to use the supplied HDMI cable of the product. Otherwise, this may cause the device to malfunction.
- Using a DVI to HDMI / DP (DisplayPort) to HDMI cable may cause compatibility issues.
- Use a certified cable with the HDMI logo attached. If you do not use a certified HDMI cable, the screen may not display or a connection error may occur.
- Recommended HDMI cable types
  - High-Speed HDMI®/™ Cable
  - High-Speed HDMI®/™ Cable with Ethernet

Connecting Peripherals

USB Cable connection - PC

The USB port on the product functions as a USB hub.

NOTE

- Make sure to install the most recent Windows OS service pack before using the product.
- Peripheral devices are sold separately.
- A keyboard, mouse, or USB device can be connected to the USB port.

CAUTION

Cautions When Using a USB Device

- A USB device with an automatic recognition program installed, or that uses its own driver, may not be recognized.
- Some USB devices may not be supported or may not work properly.
- It is recommended to use a USB hub or hard disk drive with power supplied. (If the power supply is not adequate, the USB device may not be recognized properly.)

HDMI/DP (DisplayPort) connection

To use USB 3.0, connect the A-B type USB 3.0 cable of the product to the PC.
Peripheral devices connected to the USB IN port can be controlled from the PC.

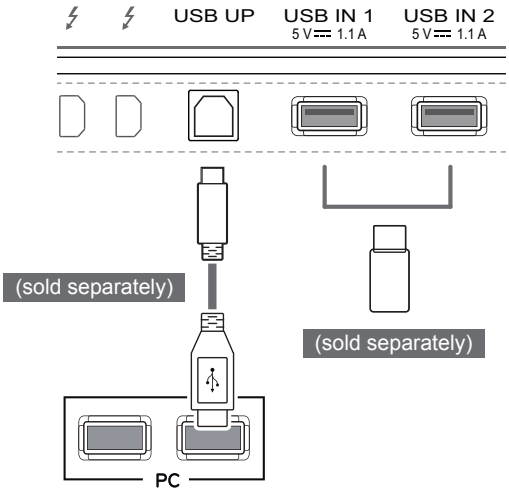

Thunderbolt (⚡) connection

Peripheral devices connected to the USB IN port can be controlled from the PC.
If you change the input on the menu while a device is in connection via the Thunderbolt port, then the device in connection via the USB port may not work properly.

34UC87 | 34UC87M

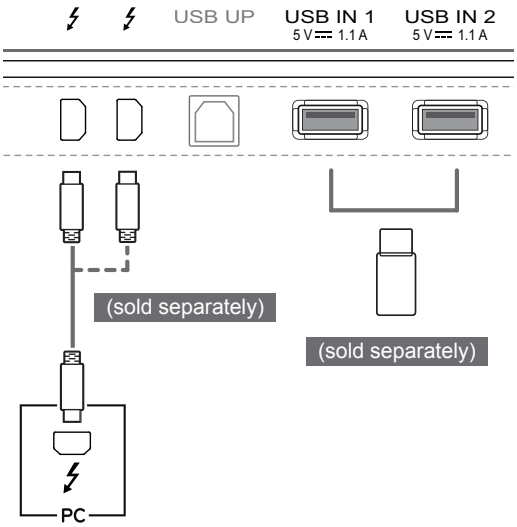

Connecting Headphones

Connect peripherals to the monitor via the headphones port. Connect as illustrated.

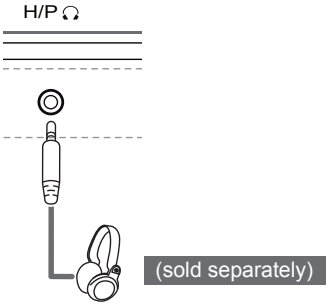

NOTE

- Peripheral devices are sold separately.
- If you use angled earphones, it may cause a problem with connecting another external device to the monitor. Therefore, it is recommended to use straight earphones.

Angled

Straight

- Depending on the audio settings of the PC and external device, headphones and speaker functions may be limited.

IR Connection

Connect the IR sensor and stereo cable to the monitor (34UC87M) via the IR Port. Connect as illustrated.

34UC87M

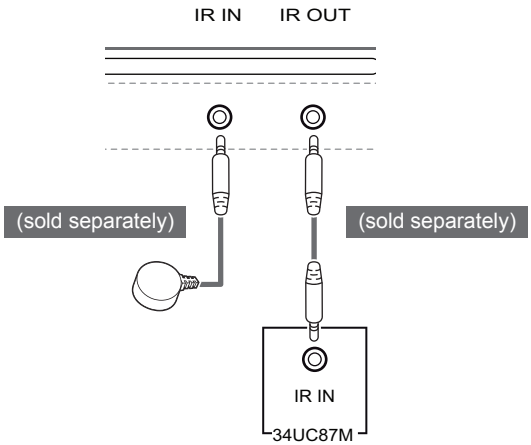

NOTE

- Make sure the power cable is disconnected.

USER SETTINGS

Activating the Main Menu

1 Press the joystick button on the bottom of the monitor.
2 Move the joystick up/down (▲/▼) and left/right(◀/▶) to set the options.
3 Press the joystick button once more to exit the main menu.

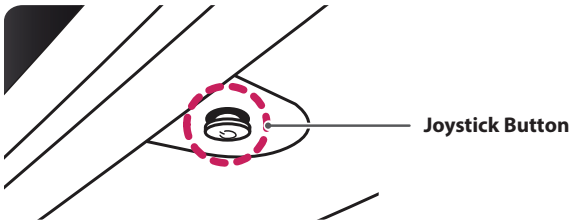

Button	Menu Status		Description
	Main menu disabled		Enables the main menu.
	Main menu enabled		Exits the main menu. (Hold the button down to turn off the monitor. You can turn off the monitor this way at any time, including when the OSD is on.)
	◀	**Main menu disabled**	Adjusts the monitor volume level.
		Main menu enabled	Enters the menu features.
	▶	**Main menu disabled**	Adjusts the monitor volume level.
		Main menu enabled	Enters the PBP feature.
	▲	**Main menu disabled**	Enables the main menu.
		Main menu enabled	Enters the MaxxAudio feature.
	▼	**Main menu disabled**	Enables the main menu.
		Main menu enabled	Turns off the monitor.

Main Menu Features

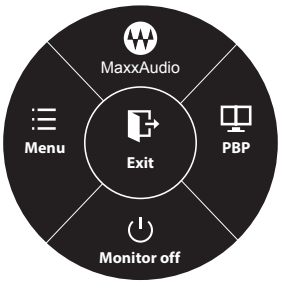

Long press: Monitor off

Main Menu	Description
Menu	Configures the screen settings.
MaxxAudio	Sets the sound quality.
PBP	Displays the screens of two input modes on one monitor.
Monitor off	Turns off the monitor.
Exit	Exits the main menu.

User Settings

Menu Settings

1 To view the **OSD menu**, press the **joystick button** at the bottom of the monitor and then enter the **Menu**.
2 Configure the options by moving the joystick up/down/left/right.
3 To return to the upper menu or set other menu items, move the joystick to ◀ or pressing (◉ / OK) it.
4 If you want to exit the OSD menu, move the joystick to ◀ until you exit.

- When you enter the menu, instructions on how to use the button will appear in the bottom right corner of the screen.

Easy control **Function** **PBP** **Screen** **Settings** **Reset**

Each option is described below.

Menu		Description
Easy control	**Brightness**	Adjusts the color contrast and brightness of the screen.
	Contrast	
	Volume	Adjusts the volume level. **NOTE** • You can adjust Mute/ Unmute by moving the joystick button to ▼ in the Volume menu.
	Input	Selects the input mode.
	Ratio	Adjusts the aspect ratio of the screen.
Function		Adjusts MaxxAudio, Reader Mode, Picture Mode, and SMART ENERGY SAVING.
PBP	**PBP**	Displays the screens of two input modes on one monitor.
Screen	**Picture**	Adjusts the Sharpness, Black Level, and Response Time of the screen.
	Color	Adjusts Gamma, Color Temp, Red, Green, Blue, and Six Color.
Settings		Adjusts Language, Power LED, Automatic Standby, DisplayPort 1.2, OSD Lock, and Set ID (34UC87M model only).
Reset		Restores the default settings.
◀	**Exit**	Exits the OSD menu.

CAUTION

- Your monitor's OSD (On Screen Display) may differ slightly from that shown in this manual.

Ratio

1 To view the **OSD menu**, press the **joystick button** at the bottom of the monitor and then enter the **Menu**.
2 Go to **Easy control** > **Ratio** by moving the joystick.
3 Configure the options following the instructions that appear in the bottom right corner.
4 To return to the upper menu or set other menu items, move the joystick to ◀ or pressing (◉ / OK) it.
5 If you want to exit the OSD menu, move the joystick to ◀ until you exit.

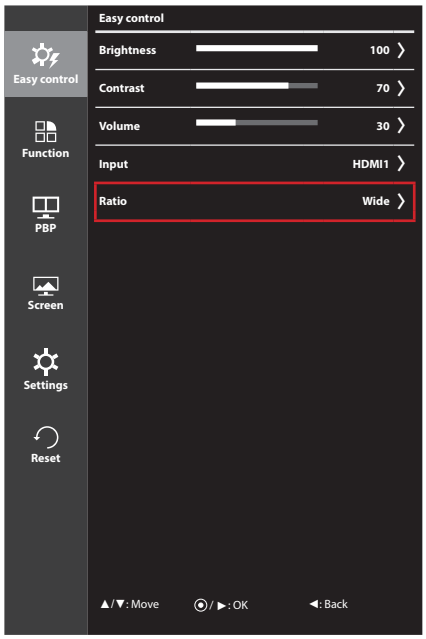

Each option is described below.

Menu > Easy control > Ratio	Description
Wide	Displays the video in widescreen, regardless of the video signal input.
Original	Displays video according to the aspect ratio of the video signal input.
Cinema 1	Enlarges the screen with an aspect ratio of 21:9. (at 1080p)
Cinema 2	Enlarges the screen with an aspect ratio of 21:9, including the black box at the bottom for subtitles. (at 1080p)
1:1	The aspect ratio is not adjusted from the original.

NOTE

- The display may look the same for Wide, Original, and 1:1 options at the recommended resolution (3440 x 1440).
- The ratio is disabled in the interlaced signal.

ENGLISH

Function

1 To view the **OSD menu**, press the **joystick button** at the bottom of the monitor and then enter the **Menu**.
2 Go to **Function** by moving the joystick.
3 Configure the options following the instructions that appear in the bottom right corner.
4 To return to the upper menu or set other menu items, move the joystick to ◀ or pressing (◉ / OK) it.
5 If you want to exit the OSD menu, move the joystick to ◀ until you exit.

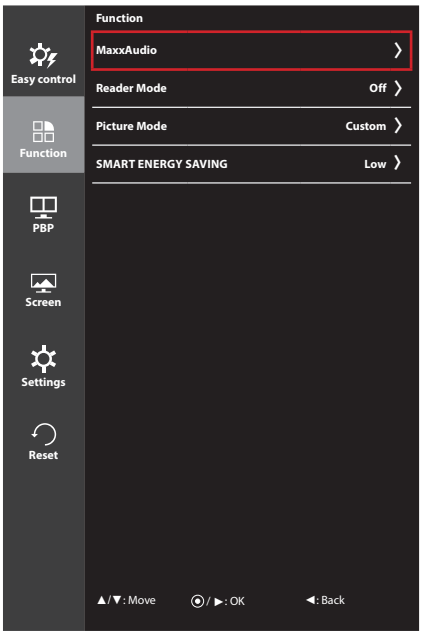

Each option is described below.

Menu > Function	Description		
MaxxAudio (Move the joystick to ▲ in the main menu to enter the function directly.)	**MaxxAudio**	**On**	MaxxAudio® by Waves, recipient of a Technical GRAMMY Award® is a suite of studio-quality sound tools for a superior listening experience.
		Off	Disables the MaxxAudio function.
	MaxxAudio Settings	The user can set the sound quality manually.	
		MaxxBass	Bass Enhancement.
		MaxxTreble	Treble Enhancement.
		MaxxDialog	Dialog Enhancement.
		Maxx3D	Enhances the three dimensional effect of the sound.
		Reset	Returns the sound quality to the default settings.
	Midnight Mode	Lets you enjoy rich and full sound at a low volume.	
Reader Mode	**Reader 1**	Optimizes the screen for browsing newspapers. You can brighten the screen in the OSD menu.	
	Reader 2	Optimizes the screen for looking at cartoons. You can brighten the screen in the OSD menu.	
	Reader Off	Reader Mode is off.	

Menu > Function	Description	
Picture Mode	**Custom**	Allows the user to adjust settings. You can adjust the color mode of the main menu.
	Photo	Optimizes the screen for photos.
	Cinema	Optimizes the screen for videos.
	Game	Optimizes the screen for games.
SMART ENERGY SAVING	**High**	Saves energy using the high-efficiency SMART ENERGY SAVING feature.
	Low	Saves energy using the low-efficiency SMART ENERGY SAVING feature.
	Off	Disables the SMART ENERGY SAVING feature.

NOTE

- In the IR function, MaxxAudio is disabled when using the headphones. (34UC87M model only)

ENGLISH

PBP

1 To view the **OSD menu**, press the **joystick button** at the bottom of the monitor and then enter the **Menu**.
2 Go to **PBP** by moving the joystick.
3 Configure the options following the instructions that appear in the bottom right corner.
4 To return to the upper menu or set other menu items, move the joystick to ◀ or pressing (◉ / OK) it.
5 If you want to exit the OSD menu, move the joystick to ◀ until you exit.

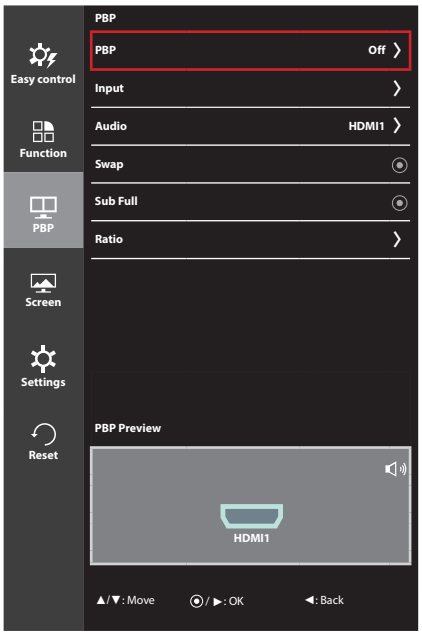

Each option is described below.

Menu > PBP	Description					
PBP	Displays the screens of two input modes on one monitor.					
	PBP Connection		**Sub Screen (Right)**			
			HDMI 1	**HDMI 2**	**DisplayPort**	**Thunderbolt (⚡)** (34UC87, 34UC87M model only)
	Main Screen (Left)	**HDMI 1**	-	O	X	X
		HDMI 2	O	-	X	X
		DisplayPort	O	O	-	X
		Thunderbolt (⚡) (34UC87, 34UC87M model only)	O	O	X	-
Input	**Main**	Selects the video signal input of the main screen.				
	Sub	Selects the video signal input of the sub screen.				
Audio	Changes the audio output in PBP mode.					
Swap	Toggles between the main screen and sub screen in PBP mode.					
Sub Full	Converts the sub screen in PBP mode to wide screen.					

Menu > PBP	Description		
Ratio	Adjusts the aspect ratio of the main screen or sub screen.		
	Main	**Wide**	Displays the video to fit the PBP screen, regardless of the video signal input.
		Original	Displays the video in the aspect ratio of the video signal input on the PBP screen.
	Sub	**Wide**	Displays the video to fit the PBP screen, regardless of the video signal input.
		Original	Displays the video in the aspect ratio of the video signal input on the PBP screen.

NOTE

- When the PBP mode is Off, Input, Audio, Swap, Sub Full, and Ratio menus are disabled.
  The Main/Sub options for Ratio are disabled if there is no signal.
- The optimal resolution for PBP mode is set automatically when PBP mode is set. (34UC87C model only)

Picture

1 To view the **OSD menu**, press the **joystick button** at the bottom of the monitor and then enter the **Menu**.
2 Go to **Screen** > **Picture** by moving the joystick.
3 Configure the options following the instructions that appear in the bottom right corner.
4 To return to the upper menu or set other menu items, move the joystick to ◀ or pressing (◉ / OK) it.
5 If you want to exit the OSD menu, move the joystick to ◀ until you exit.

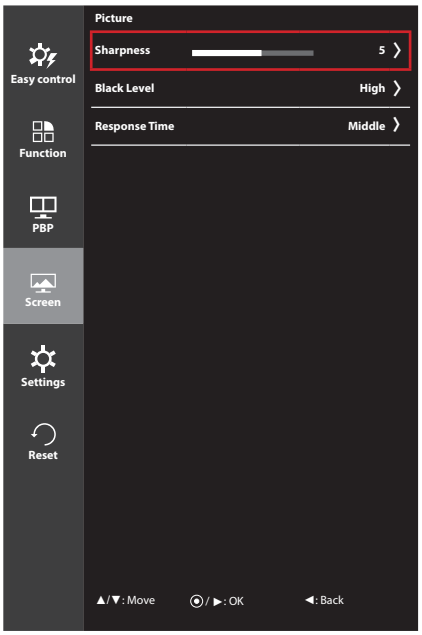

Each option is described below.

Menu > Screen > Picture	Description	
Sharpness	Adjusts the sharpness of the screen.	
Black Level	Sets the offset level (for HDMI only). • **Offset**: as a reference for a video signal, this is the darkest color the monitor can display.	
	High	The picture of the screen gets brighter.
	Low	The picture of the screen gets darker.
Response Time	Sets a response time for displayed pictures based on the speed of the screen. For a normal environment, it is recommended that you use Middle. For a fast-moving picture, use high. Setting to High may cause image sticking.	
	High	Sets the response time to High.
	Middle	Sets the response time to Middle.
	Low	Sets the response time to Low.
	Off	Does not use the response time improvement feature.

Color

1 To view the **OSD menu**, press the **joystick button** at the bottom of the monitor and then enter the **Menu**.
2 Go to **Screen** > **Color** by moving the joystick.
3 Configure the options following the instructions that appear in the bottom right corner.
4 To return to the upper menu or set other menu items, move the joystick to ◀ or pressing (◉ / OK) it.
5 If you want to exit the OSD menu, move the joystick to ◀ until you exit.

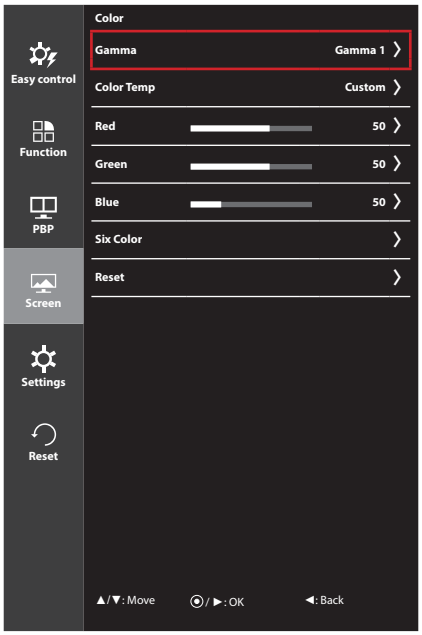

Each option is described below.

Menu > Screen > Color	Description	
Gamma	Custom gamma settings: When using the gamma 0, gamma 1, and gamma 2 monitor settings, higher gamma settings mean a brighter image is displayed and vice versa.	
Color Temp	**Custom**	The user can adjust it to red, green, or blue by customization.
	Warm	Sets the screen color to a reddish tone.
	Medium	Sets the screen color to between a red and blue tone.
	Cool	Sets the screen color to a bluish tone.
Red	You can customize the picture color using Red, Green, and Blue colors.	
Green		
Blue		
Six Color	Meets the user requirements for colors by adjusting the hue and saturation of the six colors (red, green, blue, cyan, magenta, and yellow) and then saving the settings.	
	Hue	Adjusts the tone of the screen colors.
	Saturation	Adjusts the saturation of the screen colors. The lower the value, the less saturated and brighter the colors become. The higher the value, the more saturated and darker the colors become.
Reset	Returns color to the default settings.	

ENGLISH

Settings

1 To view the **OSD menu**, press the **joystick button** at the bottom of the monitor and then enter the **Menu**.
2 Go to **Settings** by moving the joystick.
3 Configure the options following the instructions that appear in the bottom right corner.
4 To return to the upper menu or set other menu items, move the joystick to ◀ or pressing (◉ / OK) it.
5 If you want to exit the OSD menu, move the joystick to ◀ until you exit.

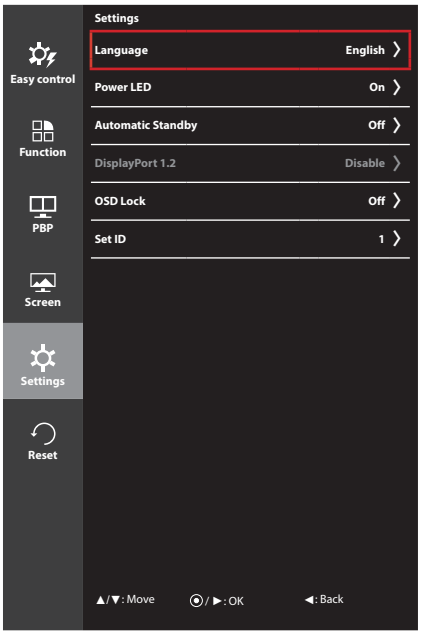

Each option is described below.

Menu > Settings	Description	
Language	Sets the menu screen to the desired language.	
Power LED	Turns the power LED on the front of the monitor on or off.	
	On	The power LED turns on automatically.
	Off	The power LED turns off.
Automatic Standby	Feature that automatically turns off the monitor when there is no movement on the screen for a period of time. You can set a timer for the auto-off function. (Off, 4 H, 6 H, and 8 H)	
DisplayPort 1.2	Enables or disables DisplayPort 1.2. **NOTE** • Be sure to configure this option according to the DisplayPort version supported by your graphics card. Set this option to Disable if your graphics card does not support DisplayPort 1.2.	
OSD Lock	Prevents incorrect key input.	
	On	Disables key input
	Off	Enables key input
	NOTE • All features are disabled except Brightness, Contrast, Volume, Input, OSD Lock in Settings, and the Exit button.	
Set ID (34UC87M model only)	You can assign a unique Set ID No. (name assignment) to each product when several products are connected for display. Specify the number (1 to 6) using the button and exit. Use the assigned Set ID to individually control each product using the Product Control Program.	

Reset

1 To view the **OSD menu**, press the **joystick button** at the bottom of the monitor and then enter the **Menu**.
2 Go to **Reset** by moving the joystick.
3 Configure the options following the instructions that appear in the bottom right corner.
4 To return to the upper menu or set other menu items, move the joystick to ◀ or pressing (◉ / OK) it.
5 If you want to exit the OSD menu, move the joystick to ◀ until you exit.

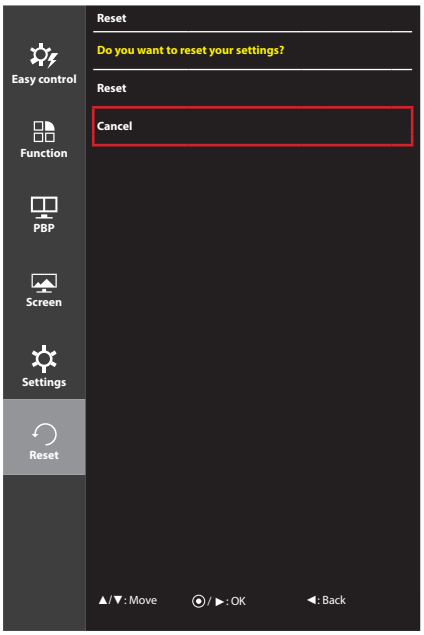

Each option is described below.

Menu > Reset	Description
Do you want to reset your settings?	
Reset	Restores the default settings.
Cancel	Cancel the reset.

TROUBLESHOOTING

Nothing is displayed on the screen.	
Is the monitor's power cord plugged in?	• Check if the power cord is correctly plugged into the power outlet.
Is the power LED on?	• Check the power cable connection and press the power button.
Is the power on and the power LED displaying white?	• Check that the connected input is enabled (Menu - Input).
Is the power LED blinking?	• If the monitor is in sleep mode, move the mouse or press any key on the keyboard to switch the display on. • Check if the computer is turned on.
Is the **OUT OF RANGE** message being displayed?	• This occurs when signals transferred from the PC (video card) are out of the horizontal or vertical frequency range of the monitor. Please see the **Product Specification** section of this manual to set the appropriate frequency.
Is the **No Signal** message being displayed?	• This is displayed when the signal cable between the PC and the monitor is missing or disconnected. Check the cable and reconnect it.
The screen may not be displayed properly when configuring DisplayPort 1.2 in a Mac product.	• DisplayPort 1.2 may not be supported depending upon the Mac product. Please contact the manufacturer.

The OSD Lock message is being displayed.	
Are some functions not available when you press the Menu button?	• The OSD is locked. Go to **Menu** > **Settings** and set **OSD Lock** to **Off**.

The screen retains an image.	
Does image sticking occur even when the monitor is turned off?	• Displaying a still image for a prolonged time may cause damage to the screen, resulting in the retention of the image. • To extend the lifetime of the monitor, use a screensaver.

Screen display is unstable and shaky / Images displayed on the monitor leave shadow trails.	
Did you select the appropriate resolution?	• If the selected resolution is HDMI 1080i 60/50 Hz (interlaced), the screen may be flickering. Change the resolution to 1080p or the recommended resolution.

NOTE

- **Vertical Frequency**: In order to display an image, the screen must be refreshed dozens of times per second, like a fluorescent lamp. The number of times the screen is refreshed per second is called vertical frequency, or refresh rate, and is represented by Hz.
- **Horizontal Frequency**: The time it takes to display one horizontal line is called the horizontal cycle. If 1 is divided by the horizontal interval, the result is the number of horizontal lines displayed per second. This is called horizontal frequency and is represented by kHz.

NOTE

- Check if the video card's resolution or frequency is within the range allowed by the monitor and set it to the recommended (optimal) resolution in **Control Panel > Display > Settings**.
- Not setting the video card to the recommended (optimal) resolution may result in blurred text, a dimmed screen, a truncated display area, or misalignment of the display.
- The setting methods may be different depending on the computer or operating system, and some resolutions may not be available depending on the performance of the video card. If this is the case, contact the manufacturer of the computer or video card for assistance.
- Some video cards may not support 3440 x 1440 resolution. If the resolution cannot be displayed, contact the manufacturer of your video card.

The display color is abnormal.	
Does the display appear discolored (16 colors)?	• Set the color to 24 bit (true color) or higher. In Windows, go to Control Panel > Display > Settings > Color Quality.
Does the display color appear unstable or monochrome?	• Check if the signal cable is connected properly. Reconnect the cable or reinsert the PC's video card.
Are there spots on the screen?	• When using the monitor, pixilated spots (red, green, blue, white, or black) may appear on the screen. This is normal for an LCD screen. It is not an error, nor is it related to the monitor's performance.

No sound from the headphone port.	
Are images displayed using DP (DisplayPort) or HDMI input without sound?	• Make sure that the headphone port connections are made properly. • Try increasing the volume with the joystick. • Set the audio output of the PC to the monitor you are using. On Microsoft Windows, go to Control Panel > Hardware and Sound > Sound > set the monitor as default device.

ENGLISH

PRODUCT SPECIFICATION

34UC87 | 34UC87M

LCD Screen	Type	TFT (Thin Film Transistor) LCD (Liquid Crystal Display) Screen	
	Color Depth	HDMI	8-bit color is supported.
		DP (DisplayPort)	10-bit color is supported.
		Thunderbolt (⚡)	8-bit color is supported.
	Pixel Pitch	0.2325 mm x 0.2325 mm	
Resolution	HDMI	Max Resolution	3440 x 1440 @ 50 Hz
		Recommended Resolution	3440 x 1440 @ 50 Hz
	DP (DisplayPort) Thunderbolt (⚡)	Max Resolution	3440 x 1440 @ 60 Hz
		Recommended Resolution	3440 x 1440 @ 60 Hz
Video Signal	Horizontal Frequency	30 kHz to 90 kHz	
	Vertical Frequency	56 Hz to 61 Hz	
	Synchronization	Separate Sync.	
Input Connector	34UC87	H/P OUT, HDMI IN 1, HDMI IN 2, DP (DisplayPort) IN, Thunderbolt (⚡), USB UP, USB IN 1, 2	
	34UC87M	H/P OUT, HDMI IN 1, HDMI IN 2, DP (DisplayPort) IN, Thunderbolt (⚡), USB UP, USB IN 1, 2, IR IN, IR OUT	
Power Sources	Power Rating	19 V ⎓ 6.0 A	
	Power Consumption (Typical)	Operating Mode: 80 W (Typical, USB excluded) (Outgoing condition) Sleep Mode ≤ 1.2 W Off Mode ≤ 0.5 W Off Mode ≤ 0.3 W (DC switch is off.)	
AC/DC Adapter	LCAP31 type, manufactured by Lienchang Output: 19 V ⎓ 7.37 A		
Stand Angle	Forward/Backward: -5° to 15° (Head)		
Environmental Conditions	Operating Conditions	Temperature 0°C to 40°C Humidity Less than 80%	
	Storing Conditions	Temperature -20°C to 60°C Humidity Less than 85%	
Audio Output	7 W + 7 W		
Supported Operating System	Win 7, Win 8.1, Mac OS*		

Dimensions	Monitor Size (Width x Height x Depth)	
	With Stand	830.5 mm x 460.8 mm x 241.4 mm
	Without Stand	830.5 mm x 370.3 mm x 79.8 mm
Weight (Without Packaging)	With Stand	10.0 kg
	Without Stand	8.0 kg

Specifications are subject to change without notice.

* In accordance with Mac products may not support the recommended resolution or the some features.
(For more information, refer to the support information card of Mac which is provided separately.)

34UC87C

LCD Screen	Type	TFT (Thin Film Transistor) LCD (Liquid Crystal Display) Screen	
	Color Depth	HDMI	8-bit color is supported.
		DP (DisplayPort)	10-bit color is supported.
	Pixel Pitch	0.2325 mm x 0.2325 mm	
Resolution	HDMI	Max Resolution	3440 x 1440 @ 50 Hz
		Recommended Resolution	3440 x 1440 @ 50 Hz
	DP (DisplayPort)	Max Resolution	3440 x 1440 @ 60 Hz
		Recommended Resolution	3440 x 1440 @ 60 Hz
Video Signal	Horizontal Frequency	30 kHz to 90 kHz	
	Vertical Frequency	56 Hz to 61 Hz	
	Synchronization	Separate Sync.	
Input Connector	H/P OUT, HDMI IN 1, HDMI IN 2, DP (DisplayPort) IN, USB UP, USB IN 1, 2		
Power Sources	Power Rating	19 V ⎓ 4.0 A	
	Power Consumption (Typical)	Operating Mode: 70 W (Typical, USB excluded)(Outgoing condition) Sleep Mode ≤ 1.2 W Off Mode ≤ 0.5 W Off Mode ≤ 0.3 W (DC switch is off.)	
AC/DC Adapter	ADS-110CL-19-3 190110G type, manufactured by Honor Output: 19 V ⎓ 5.79 A		
Stand Angle	Forward/Backward: -5° to 15° (Head)		
Environmental Conditions	Operating Conditions	Temperature 0 °C to 40 °C Humidity Less than 80 %	
	Storing Conditions	Temperature -20 °C to 60 °C Humidity Less than 85 %	
Audio Output	7 W + 7 W		
Supported Operating System	Win 7, Win 8.1, Mac OS		

Dimensions	Monitor Size (Width x Height x Depth)	
	With Stand	830.5 mm x 460.8 mm x 241.4 mm
	Without Stand	830.5 mm x 370.3 mm x 79.8 mm
Weight (Without Packaging)	With Stand	10.0 kg
	Without Stand	8.0 kg

Specifications are subject to change without notice.

Factory Support Mode

34UC87 34UC87M **(Preset Mode, HDMI/ DisplayPort/ Thunderbolt PC)**

34UC87C **(Preset Mode, HDMI/ DisplayPort PC)**

Preset Mode	Horizontal Frequency (kHz)	Vertical Frequency (Hz)	Polarity (H/V)	Remarks
640 x 480	31.469	59.94	-/-	
800 x 600	37.879	60.317	+/+	
1024 x 768	48.363	60	-/-	
1152 x 864	54.347	60.05	+/+	
1280 x 720	45	60	+/+	
1280 x 1024	63.981	60.02	+/+	
1600 x 900	60	60	+/+	
1680 x 1050	65.29	59.954	-/+	
1920 x 1080	67.5	60	+/-	
2560 x 1080	66.7	60	-/+	
3440 x 1440	43.82	29.99	+/+	
3440 x 1440	73.68	49.99	+/+	
3440 x 1440	88.82	59.97	+/+	HDMI is not supported.

HDMI Timing (Video)

Preset Mode	Horizontal Frequency (kHz)	Vertical Frequency (Hz)	Remarks
480p	31.5	60	
720p	45	60	
1080p	67.5	60	

Power LED

Mode	LED Color
On Mode	White
Sleep Mode	Flashing White
Off Mode	Off

PROPER POSTURE

Proper Posture for Using the Monitor

Adjust the screen so that you can comfortably look at it at a slight downward angle from your natural eye level.

- Take a break for approximately 10 minutes every hour to reduce any fatigue caused by prolonged usage.
- Adjust the stand angle from -5° to 15° to obtain the best view of the screen.

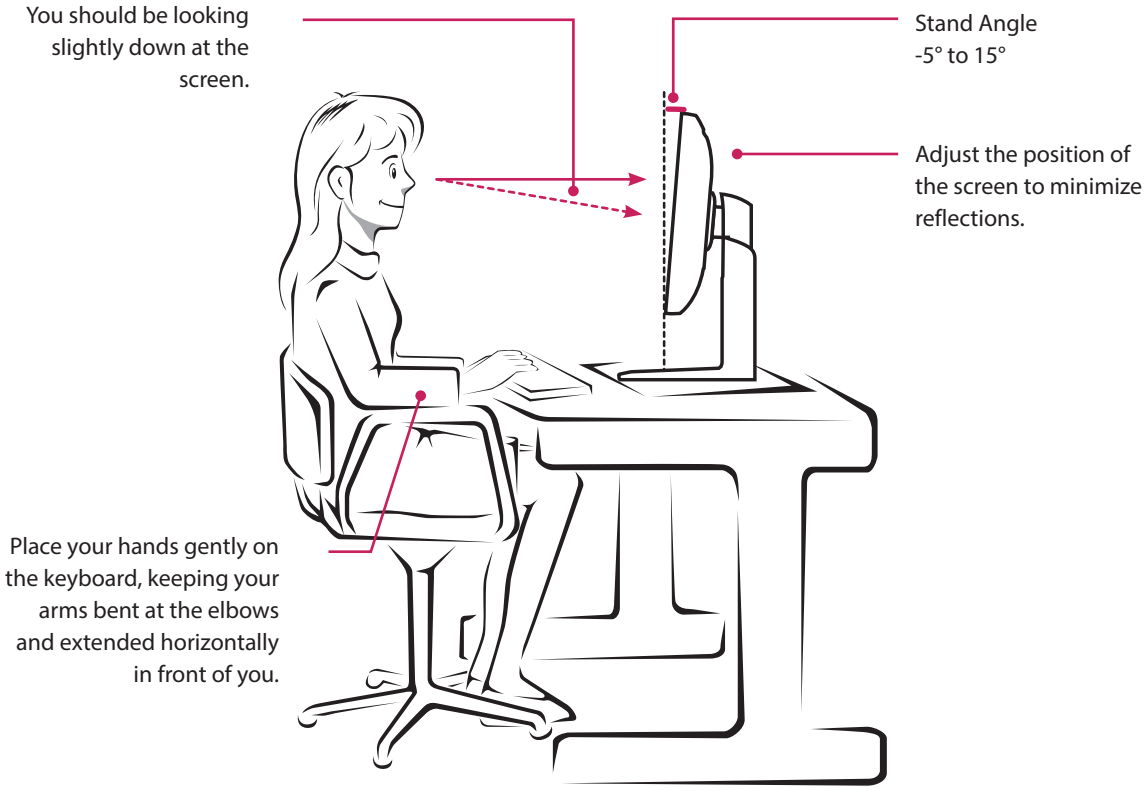

LG
Life's Good

This device meets the EMC requirements for home appliances (Class B) and is intended for home usage. This device can be used in all regions. Read the owner's manual (CD) carefully and keep it at hand. Please note that the label attached to the product provides information for technical support.

Model _____

Serial No. _____

ENERGY STAR is a set of power-saving guidelines issued by the U.S.Environmental Protection Agency (EPA).

As an ENERGY STAR Partner LGE U. S. A., Inc. has determined that this product meets the ENERGY STAR guidelines for energy efficiency.

Refer to ENERGY STAR.gov for more information on the ENERGY STAR program.