LG
Life's Good

ENGLISH

OWNER'S MANUAL

Speaker System

Please read this manual carefully before operating your set and retain it for future reference.

OM7550

MFL69001807

www.lg.com

OM7550-FB.DAUSLLK_FULL BOOK_ENG_MFL69001807.indd 1 2015-05-20 5:24:52

Safety Information

CAUTION
RISK OF ELECTRIC SHOCK DO NOT OPEN

CAUTION: TO REDUCE THE RISK OF ELECTRIC SHOCK DO NOT REMOVE COVER (OR BACK) NO USER-SERVICEABLE PARTS INSIDE REFER SERVICING TO QUALIFIED SERVICE PERSONNEL.



This lightning flash with arrowhead symbol within an equilateral triangle is intended to alert the user to the presence of uninsulated dangerous voltage within the product's enclosure that may be of sufficient magnitude to constitute a risk of electric shock to persons.



The exclamation point within an equilateral triangle is intended to alert the user to the presence of important operating and maintenance (servicing) instructions in the literature accompanying the product.

WARNING: TO PREVENT FIRE OR ELECTRIC SHOCK HAZARD, DO NOT EXPOSE THIS PRODUCT TO RAIN OR MOISTURE.

CAUTION: The apparatus should not be exposed to water (dripping or splashing) and no objects filled with liquids, such as vases, should be placed on the apparatus.

WARNING: Do not install this equipment in a confined space such as a book case or similar unit.

CAUTION: Do not use high voltage products around this product. (ex. Electrical swatter) This product may malfunction due to electrical shock.



CAUTION: This product employs a Laser System.
To ensure proper use of this product, please read this owner's manual carefully and retain it for future reference. Shall the unit require maintenance, contact an authorized service center.
Use of controls, adjustments or the performance of procedures other than those specified herein may result in hazardous radiation exposure. To prevent direct exposure to laser beam, do not try to open the enclosure.

CAUTION: Do not block any ventilation openings. Install in accordance with the manufacturer's instructions.
Slots and openings in the cabinet are provided for ventilation and to ensure reliable operation of the product and to protect it from over heating. The openings shall be never be blocked by placing the product on a bed, sofa, rug or other similar surface. This product should not be placed in a built-in installation such as a bookcase or rack unless proper ventilation is provided or the manufacturer's instruction has been adhered to.

CAUTION concerning the Power Cord

Most appliances recommend they be placed upon a dedicated circuit;

That is, a single outlet circuit which powers only that appliance and has no additional outlets or branch circuits. Check the specification page of this owner's manual to be certain. Do not overload wall outlets. Overloaded wall outlets, loose or damaged wall outlets, extension cords, frayed power cords, or damaged or cracked wire insulation are dangerous. Any of these conditions could result in electric shock or fire. Periodically examine the cord of your appliance, and if its appearance indicates damage or deterioration, unplug it, discontinue use of the appliance, and have the cord replaced with an exact replacement part by an authorized service center. Protect the power cord from physical or mechanical abuse, such as being twisted, kinked, pinched, closed in a door, or walked upon. Pay particular attention to plugs, wall outlets, and the point where the cord exits the appliance.

The Power Plug is the disconnecting device. In case of an emergency, the Power Plug must remain readily accessible.

This device is equipped with a portable battery or accumulator.

Safety way to remove the battery or the battery from the equipment: Remove the old battery or battery pack, follow the steps in reverse order than the assembly. To prevent contamination of the environment and bring on possible threat to human and animal health, the old battery or the battery put it in the appropriate container at designated collection points. Do not dispose of batteries or battery together with other waste. It is recommended that you use local, free reimbursement systems batteries and accumulators. The battery shall not be exposed to excessive heat such as sunshine, fire or the like.

RF Radiation Exposure Statement

This equipment should be installed and operated with minimum distance 20 cm between the radiator and your body.

- The appliance is not intended for use by young children or infirm persons without supervision.
- Young Children should be supervised to ensure that they do not play with appliance.
- f the appliance is supplied from a cord extension set or an electrical portable outlet device, the cord extension set on electrical portable outlet device must be positioned so that it is not subject to splashing (of water or any form of liquid) or ingress of moisture.

Table of Contents

1 Getting Started

2 Safety Information
6 Unique Features
6 Accessories
7 Playable file Requirement
7 – Music file requirement
7 – Compatible USB Devices
7 – USB device requirement
8 Remote control
10 Top panel
12 Front panel
13 Rear panel

2 Connecting

14 Use of Tripod
16 Connecting the Power cord
16 Optional Equipment Connection
16 – AUX IN Connection
17 – AUX OUT Connection
18 – PORT. IN Connection
18 – USB Connection
19 – Antenna Connection

3 Operating

20 Basic Operations
20 – CD/USB Operations
20 – Auto Play
21 – Selecting a folder and an MP3/WMA file
22 – Deleting an MP3/WMA file
23 Playback Effect
23 – DJ EFFECT
23 – SCRATCH Effect
23 – DJ PRO
24 – AUTO DJ
24 Using BLUETOOTH® wireless technology
25 – Listening to music stored on the BLUETOOTH devices
27 Using the Music Flow Bluetooth App
27 – Install "Music Flow Bluetooth" App onto Your Bluetooth Device
28 – Activate Bluetooth with "Music Flow Bluetooth" App
29 Radio Operations
29 – Listening to the radio
29 – Improving poor FM reception
29 – Presetting the Radio Stations
29 – Deleting all the saved stations
30 Sound adjustment
30 – Setting the sound mode
30 – Setting the USER EQ
31 Advanced Operations
31 – Recording to USB
33 – Programmed Playback

34 Other Operations
34 – Turn off the sound temporarily
34 – CHILDSAFE Mode
34 – Displaying file information (ID3 TAG)
34 – DEMO
35 – Using Microphone
35 – LIGHTING
35 Setting the Clock
35 – Setting the Clock through "Music Flow Bluetooth" App
36 – Using your player as an alarm clock
36 – Sleep Timer Setting
36 – Dimmer
37 Auto power down
37 – AUTO POWER On
38 – Auto function change
38 LG Sound Sync

4 Troubleshooting

40 Troubleshooting

5 Appendix

41 Maintenance
41 – Notes on Discs
41 – Handling the Unit
42 General specifications
43 Trademarks and Licenses

Unique Features

Bluetooth®

Listens to music stored on your **Bluetooth** device.

Portable In

Listens to music from your portable device. (MP3, Notebook, etc.)

Playback effects

Listens to music with various sound and playback effects.

USB Direct Recording

Records music to your USB device.

Music Flow Bluetooth

Music Flow Bluetooth is an App designed to let you take control of some of LG's latest Audio devices. Refer to page 27.

LG Sound Sync

Controls volume level of this unit by the remote control of your LG TV that is compatible with LG Sound Sync.

Accessories

Please check and identify the supplied accessories.

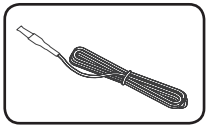

FM Antenna (1)

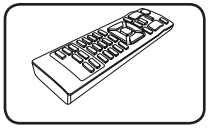

Remote Control (1)

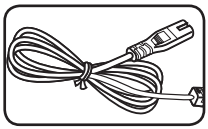

Power cord (1)

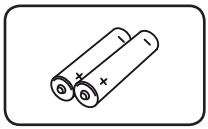

Batteries (2)

Playable file Requirement

Music file requirement

MP3/WMA file compatibility with this unit is limited as follows.

- Sampling frequency : within 32 to 48 kHz (MP3), within 32 to 48 kHz (WMA)
- Bit rate : within 32 to 320 kbps (MP3), 40 to 192 kbps (WMA)
- Maximum files : Data CD : 999 / USB : 2000
- Maximum folders : Data CD : 99 / USB : 200
- File extensions : ".mp3"/ ".wma"
- Certain MP3/WMA files may not be played depending on the type or format of the file.
- CD-ROM file format : ISO 9660/ JOLIET
- We recommend that you use Easy-CD Creator, which creates an ISO 9660 file system.

The DTS is not supported. In case of DTS audio format, audio is not output.

You have to set the disc format option to [Mastered] in order to make the discs compatible with the LG players when formatting rewritable discs. When setting the option to Live File System, you cannot use it on LG players.

(Mastered/Live File System : Disc format system for Windows Vista)

Compatible USB Devices

- MP3 Player : Flash type MP3 player.
- USB Flash Drive :
  Devices that support USB2.0 or USB1.1.
- The USB function of this unit does not support all USB devices.

USB device requirement

- Devices which require additional program installation when you have connected it to a computer, are not supported.
- Do not extract the USB device while in operation.
- For a large capacity USB, it may take longer than a few minute to be searched.
- To prevent data loss, back up all data.
- If you use a USB extension cable or USB hub, the USB device is not recognized.
- Using NTFS file system is not supported. (Only FAT(16/ 32) file system is supported.)
- This unit recognizes up to 2000 files.
- External HDD, Card readers, Locked devices, or hard type USB devices are not supported.
- USB port of the unit cannot be connected to PC. The unit cannot be used as a storage device.
- Some USB may not work with this unit.

Remote control

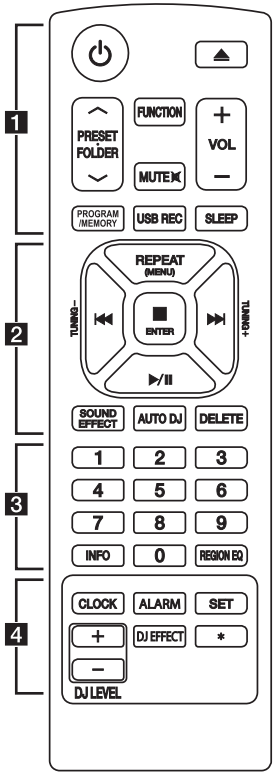

Battery Installation

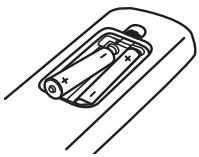

Remove the battery cover on the rear of the Remote Control, and insert two (size AAA) batteries with ⊕ and ⊖ matched correctly.

1

⏻ (Power) **:** Switches the unit ON or OFF.

⏏ (Open/Close) **:** Opens and closes the disc tray.

PRESET·FOLDER Λ/V :

- Searches for a folder of MP3/WMA files. When a CD/USB containing MP3/WMA files in several folders is being played, press **PRESET·FOLDER Λ/V** to select the folder you want to play.
- Chooses a preset number for a radio station.

FUNCTION : Selects the function and input source.

MUTE : Mutes the sound.

VOL +/- : Adjusts speaker volume.

PROGRAM/MEMORY :

- Stores radio stations.
- Deletes all the saved stations.
- Creates a programmed list you want to listen to.

USB REC : USB direct recording.

SLEEP : Sets the system to turn off automatically at a specified time.
(Dimmer : The display window will be darkened by half.)

2

REPEAT (MENU) : Listens to your tracks/files repeatedly or randomly.

TUNING-/+ : Selects the radio stations.

I◀◀/▶▶I (Skip/Search) **:**

- Skips Fast backward or Forward.
- Searches for a section within a track/file.

■ ENTER :

- Stops playback or recording.
- Cancels DELETE function.

▶/II (Play/Pause) **:**

- Starts or pauses playback.

SOUND EFFECT : Chooses sound impressions.

AUTO DJ : Selects the AUTO DJ mode. (For more information refer to page 24)

DELETE :

- Deletes MP3/WMA files. (USB only).
- Deletes a song on the programmed list.

3

0 to **9** numerical buttons **:** Selects numbered tracks, files, or preset number.

INFO

- Sees informations about your music. An MP3 file often come with ID3 tag. The tag gives the Title, Artist, Album or Time information.
- Sees the address of connected Bluetooth device in Bluetooth mode.

REGION EQ : Select sound impressions.

4

CLOCK : Sets a clock and checks a time.

ALARM : With the ALARM function you can turn CD, USB play and Tuner reception on at a desired time.

SET : Confirms the setting.

DJ EFFECT : Selects DJ EFFECT mode. (Refer to page 23)

DJ LEVEL +/- : Adjusts the level of DJ EFFECT sound.

***** : This button is not available.

Top panel

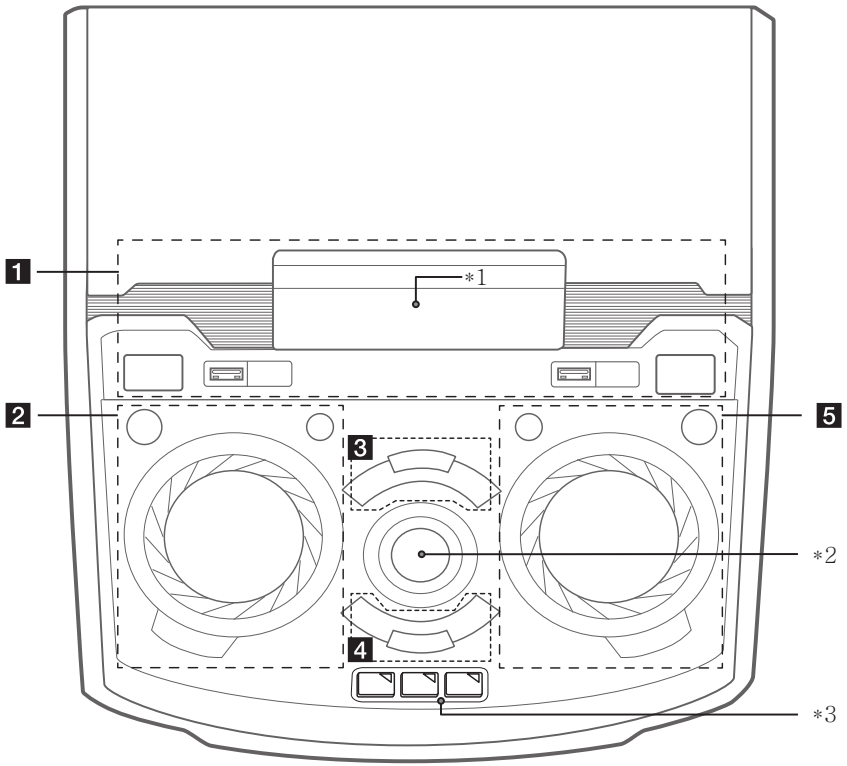

1 ⏻/❙ **POWER ON/OFF**

USB Port1,2 : You can play or record sound files by connecting the USB device.

USB REC / DEMO

- Records to USB.
- Shows Demo mode

*1 - Display window

2 **LIGHTING** : Turns on/off the lighting effects.

FUNCTION : Selects the function and input source.

SCRATCH / CONTROL

Turn clockwise or counterclockwise to make Scratch sound. / Sets Delay value in X-BOOM PLUS mode. / Adjust DJ EFFECT level. / Adjusts BASS, MID(MIDDLE) or TRE(TREBLE) sound level when setting USER EQ.

X-BOOM PLUS

Press to select X-BOOM PLUS mode.

DJ EFFECT

Selects DJ EFFECT mode. (For more information refer to page 23).

3 **>II**

- Starts or pauses playback.

AUTO DJ

Selects the AUTO DJ mode. (For more informaion refer to page 24).

BASS BLAST : Selects BASS BLAST or STANDARD effect directly.

□ : Stops playback or cancels DELETE function.

*2 - **MASTER VOLUME** : Adjusts speaker volume.

4 **I<< / >>I**

-Skips Fast backward or Forward.
-Searches for a section within a track/ file.

LG EQ

Select sound impressions.

USER EQ

Controls sound register.

*3 - **DJ Pro**. : Press a desired sound pad.

5 **Bluetooth** : Turns to BLUETOOTH function.

FOLDER

Moves to folder and file in selection mode.

SEARCH

Searches a folder and a file on CD/USB function.

ENTER

Selects a folder when searching a file.

DELETE

-Deletes a song on the programmed list.
-Deletes MP3/WMA files. (USB only).

Front panel

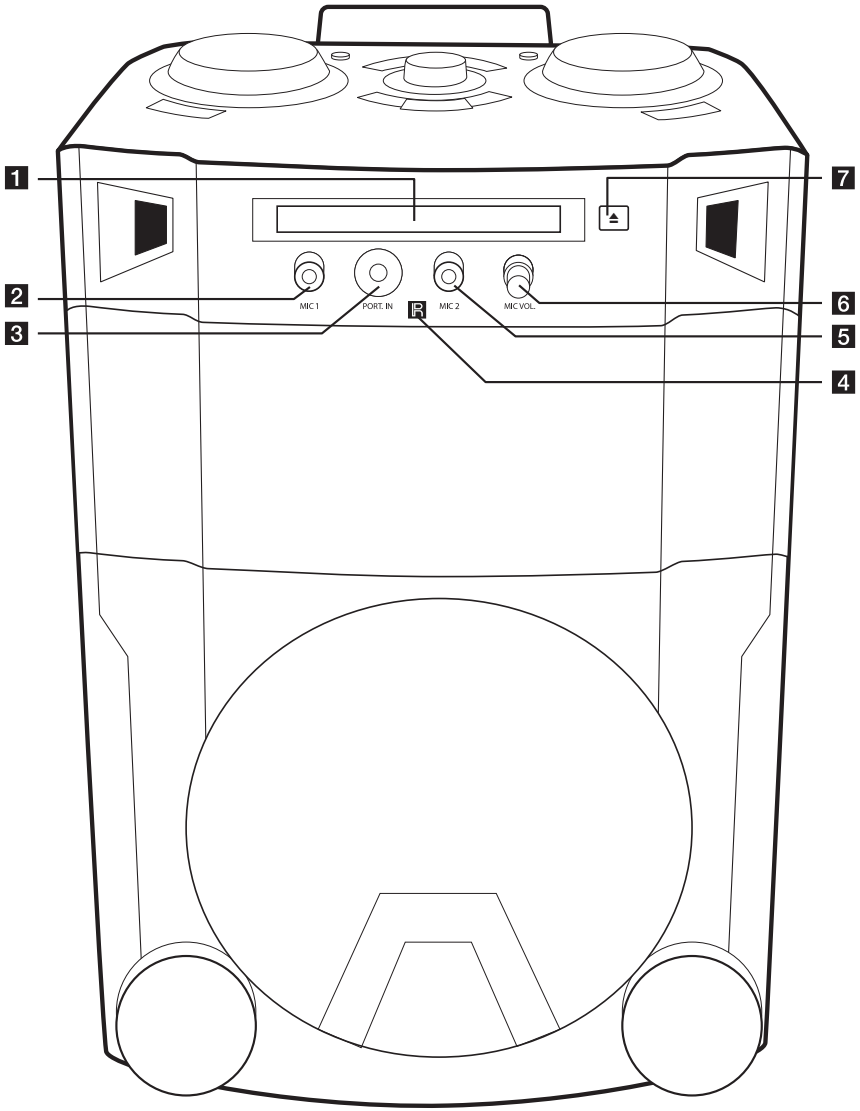

1 Disc tray
2 **MIC 1**
3 **PORT. IN**
4 Remote sensor
5 **MIC 2**
6 **MIC VOL.**
7 ⏏ : Opens and closes the disc tray.

Rear panel

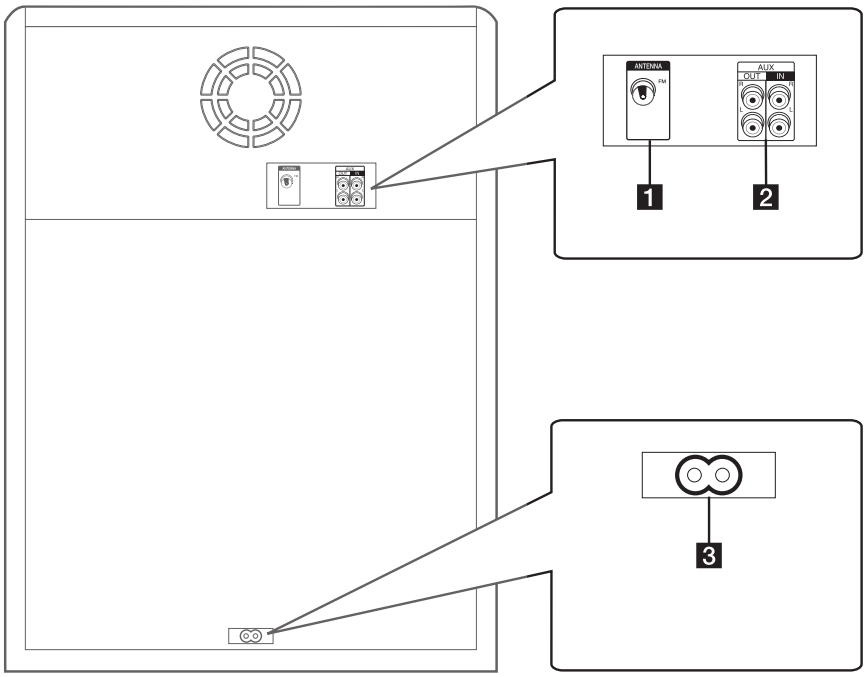

1 **ANTENNA** (FM)

2 **AUX IN** (L/R)
AUX OUT (L/R)

3 Power cord

Caution

- Connect the power cord to wall outlet directly if possible. Or when you use an extension cable, it is highly recommended to use an extension cable of 110 V / 15 A or 230 V / 15 A, otherwise the unit may not operate properly because of the lack of power supply.
- Do not overload the extension cord with excessive electrical load.

Use of Tripod

You can mount the unit on a tripod.
The tripod is an optional purchase.

Caution

- Extend the tripod legs as much as possible and tighten up the screw securely.
- Before connecting with the unit, you must set up the tripod completely to prevent shaking.

1. Unfold the tripod on a flat surface. And then fix the tripod.
   Tighten up the part below as shown.
2. Lift the speaker and connect the tripod to fixing part on the bottom of the speaker.

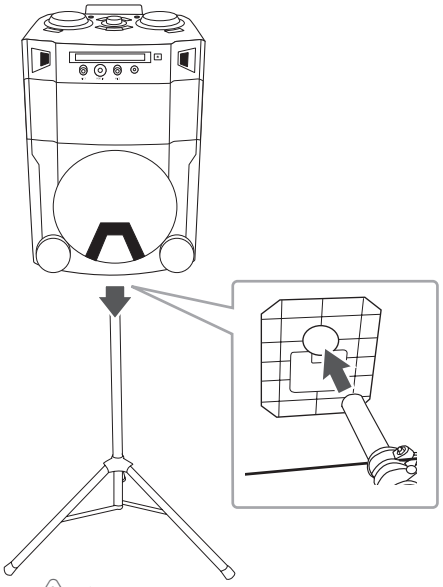

Caution

When connecting the speaker and the tripod, You should work together with more than two people.

3. Tighten up the Hand screw on the bottom of the unit.

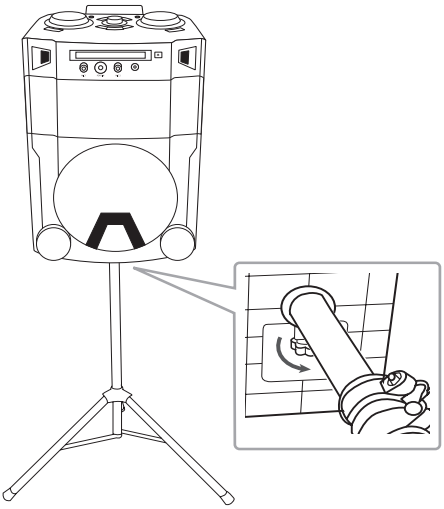

Caution

Tighten up the Hand screw on the bottom of the unit while the other is holding a speaker and tripod.

Note

- If you use a tripod, use the tripod only for speaker.
- Before buying a tripod, check the specifications for maximum bearing load of the center column.
  (Unit's net weight : about 22.7 kg)

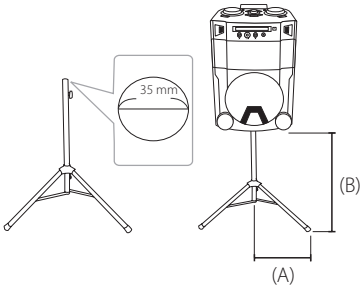

- Use tripod as below :
  (A) From tripod's center to tripod's leg : above 600 mm
  (B) From top of tripod to bottom of tripod : below 900 mm
  (C) Tripod net weight : over 3.9 kg
- Use a tripod as low as possible for safety use.
- You should pull the center column to the maximum only in case of need.
- Mount only one unit on each tripod.
- Do not try to extent the tripod legs outside over its allowed range.
- Make sure the tripod is correctly assembled and all its components are tightly connected.
- Do not try to assemble the tripod if parts are missing or defective.
- After installation, check whether the unit is set up firmly on the tripod or not.
- Do not place the unit on an unstable position where it might accidentally fall over.
- Add weight such as sand bags around the tripod legs to prevent them from falling over.

Note

- You should limit people around the unit while using this unit with tripod. Otherwise it may result in malfunction and causing personal injury or property damage.
- Standing on the stool to reach unit control panel is risky and might lead to injuries.
- Do not put or attach other objects on the tripod.
- Do not shake or push the unit when the tripod is installed.
- Refrain from moving around the tripod after unit is installed.
- Remove the units from all connected cables of the tripods before moving the tripods or adjusting their height.
- When transporting or moving the unit, always use two or more people.
- When you use the tripod, use an extension cord. always be careful the movement of cable.
- It is prohibited to use this unit outside. (Indoor use only)
- Do not expose the unit to excessive dust or vibrations, or extreme cold or heat (such as in direct sunlight, near a heater) to prevent the possibility of panel disfiguration or damage to the internal components.
- When using the external input cable (Mic, etc.) after installing the unit on the tripod, external input cable can cause the unit to fall down.
- Watch out the people can trip over the input cable (Mic, etc.) connected the unit.
- Always be careful of the unit being tripped.

Connecting the Power cord

1. Connect the power cord to the unit.
2. Plug the power cord into an outlet.

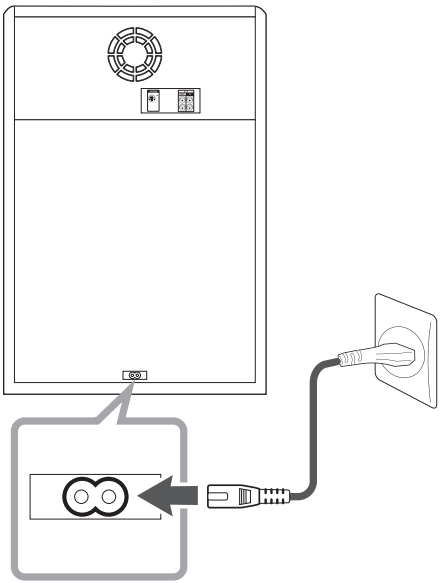

Optional Equipment Connection

AUX IN Connection

Connect an output of auxiliary device (Camcorder, TV, Player, etc) to the **AUX IN** (L/R) connector.

If your device has only one output for audio (mono), connect it to the left audio jack on the unit.

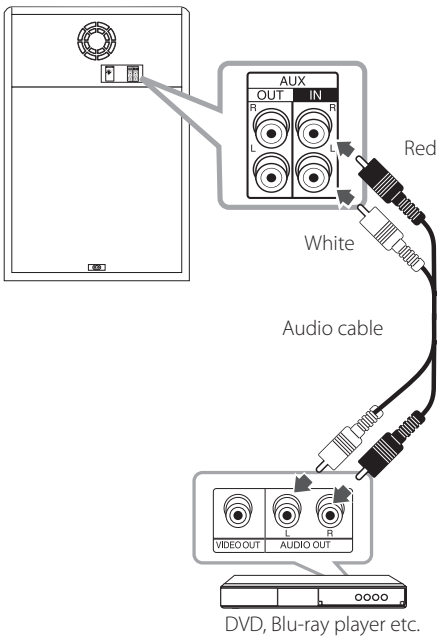

AUX OUT Connection

Connect an input of auxiliary device to the **AUX OUT** (L/R) connector.

If your device has only one input for audio(mono), connect it to the left audio jack on the unit.

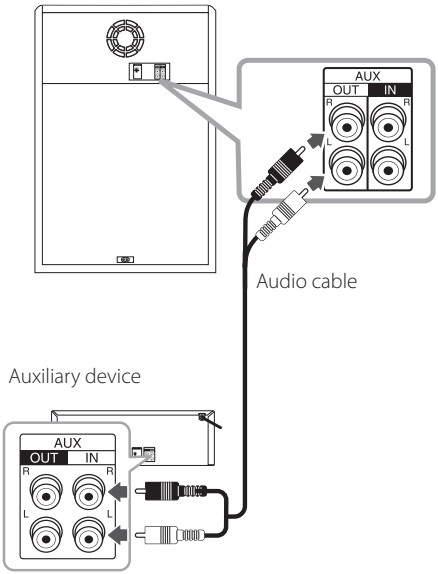

X-BOOM PLUS

You can connect two units to play music together.

1. Connect **AUX OUT** connector on a unit to the **AUX IN** connector on the other unit using Audio cable.
2. Press **X-BOOM PLUS** on the unit connected through AUX OUT.
   X-BOOM PLUS is displayed.
3. Rotate **SCRATCH / CONTROL** clockwise or counterclockwise to adjust Delay setting.
4. Press **X-BOOM PLUS** to save the Delay setting.

Note

- This function is available on CD, USB 1, USB 2, BT or PORTABLE Function.
- The initial Delay is 0 ms and the Delay becomes to 30 ms when you press **X-BOOM PLUS**. The connected device's Delay may differ. If Audio Sync is not matched, adjust Delay of **X-BOOM PLUS** to synchronize sound.
- It is available to adjust the Delay from 0 ms to 100 ms. Synchronizing tempo is not available depending on devices.
- Delay value is saved when the unit turns off.

PORT. IN Connection

Connect an output (earphone or line out) of portable device (MP3 or PMP etc) to the **PORT. IN** connector.

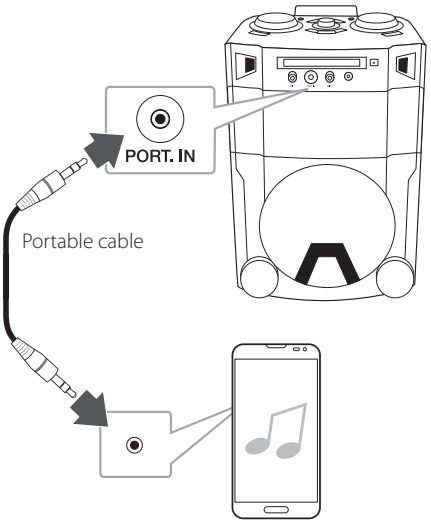

Listening to music from your portable player or external device

The unit can be used to play the music from many types of portable player or external device.

1. Connect the portable player to the PORT. IN connector of the unit.

   Or

   Connect the external device to the AUX IN connector of the unit.
2. Turn the power on by pressing ⏻/❙ ⏻/❙ **POWER ON/OFF**.
3. Press **FUNCTION** to select PORTABLE or AUX Function.
4. Turn on the portable player or external device and start it playing.

USB Connection

Connect a USB device (or MP3 player, etc.) to the USB ports on the unit.

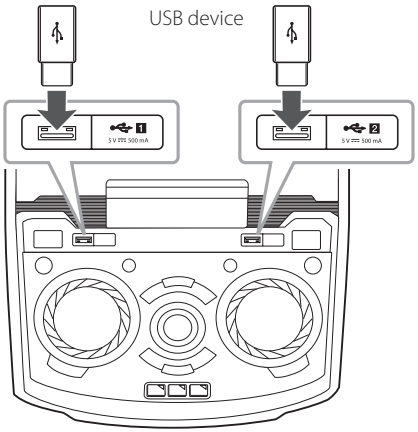

Note

Removing the USB device from the unit :

1. Choose a different function/mode or press ■ **ENTER** on the remote control or ☐ on the unit twice in a row.
2. Remove the USB device from the unit.

Antenna Connection

Connect the supplied FM antenna for listening to the radio.

Connect the FM wire antenna to the FM antenna connector.

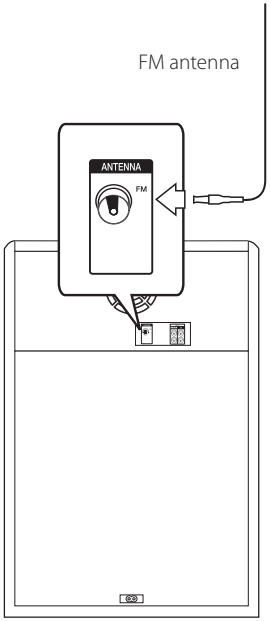

Note

Be sure to fully extend the FM wire antenna.

Basic Operations

CD/USB Operations

1. Insert the disc by pressing ⏏ on the remote control or ⏏ on the unit
   Or connect the USB device to the USB port.
2. Select CD or USB function by pressing **FUNCTION**.

To	Do this
Stop	Press ■ **ENTER** on the remote control or □ on the unit.
Playback	Press ▶/II on the remote control or ▶II on the unit.
Pause	Press ▶/II on the remote control or ▶II on the unit during playback.
Searching for a section within a track/ file	Press I◀◀/▶▶I on the remote control or I≪/≫I on the unit during playback and release it at the point you want to listen to.
Selecting a track/file directly	Press **0** to **9** numerical buttons on the remote control to go to the desired file or track directly.
Skipping to the next/ previous track/file	- In stop status, Press I◀◀ / ▶▶I on the remote control or I≪ / ≫I on the unit to go to the next/previous track/file. - During Playback, (1) By using I◀◀ / ▶▶I buttons : Press ▶▶I on the remote control or ≫I on the unit to go to the next track/file. Playing less than 2 seconds, press I◀◀ on the remote control or I≪ on the unit to go to the previous track/file. Playing after 3 seconds, press I◀◀ on the remote control or I≪ on the unit to go to the beginning of the track/file. (2) By using **SEARCH** : Rotate **SEARCH** on the unit and press ▶/II to play the track/ file.
Playing repeatedly or randomly	Press **REPEAT(MENU)** on the remote control repeatedly. Refer to the note for details about the display change.

Note

- The display changes in the following order.

USB	MP3/WMA CD	AUDIO CD
RPT 1	RPT 1	RPT 1
RPT*DIR	RPT DIR	-
RPT ALL	RPT ALL	RPT ALL
RANDOM	RANDOM	RANDOM
OFF	OFF	OFF

*DIR : Directory

- When you play the programmed list, only RPT 1 and RPT ALL are available.
- Even after restarting the unit or switching one function to another, you can listen to music from the point where it's last been played.
- If you leave the disc tray open for 5 minutes, it will close automatically.

Auto Play

- AUDIO/MP3/WMA CD is played automatically after Disc tray is open and then closed.
- Automatically switches to the CD function if Disc tray is open and then closed when there is no disc in Disc tray.

Selecting a folder and an MP3/WMA file

On the unit

1. Press **FOLDER** and rotate **SEARCH** until a desired folder appears.
2. Press **ENTER** and rotate **SEARCH** until a desired file appears. Press ≻II to play it.

On the remote control

1. Press **PRESET·FOLDER Λ/V** on the remote control repeatedly until a desired folder appears.
2. Press ►/II to play it. The first file of folder will play.

Note

- CD / USB Folders/Files are recognized as below.

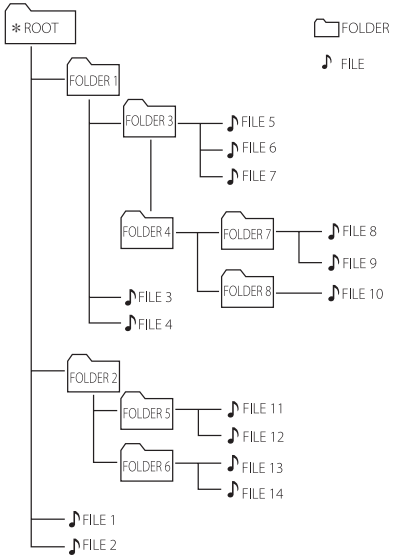

- If there is no file in a folder, the folder will not appear.
- Folders will be presented as the following order;
  ROOT → FOLDER 1 → FOLDER 3 → FOLDER 7 → FOLDER 8 → FOLDER 5 → FOLDER 6
- File will be played from ♪ file No.1 to ♪ file No.14 one by one.
- Files and folders will be presented in order recorded and may be presented differently according to the record circumstances.
- *ROOT : The first screen you can see when a computer recognize the USB is "ROOT".

Deleting an MP3/WMA file

You can delete file, folder or format by pressing **DELETE**. This function is supported only in stop status. (USB only)

1. -Select the file you want to delete and press **DELETE**.

   -Select the folder you want to delete by pressing **FOLDER** and rotating **SEARCH** on the unit and press **DELETE**.
   Or select the folder you want to delete by pressing **PRESET·FOLDER** ∧/∨ on the remote control and press **DELETE**.

   -Press and hold **DELETE** to format the USB device.

   Or

   Press **DELETE** repeatedly during selecting the MP3/WMA file.

   The display changes in the following order.

   - DEL FILE : Deletes file
   - DEL DIR : Deletes folder
   - FORMAT : Formats USB

2. To delete file/folder or format, press ▶/II on the remote control or press >II on the unit.
   If you want to exit the current mode, press ■ **ENTER** on the remote control or press □ on the unit.

Caution

- Do not extract the USB device during operation. (play, delete, etc.)
- Regular back up is recommended to prevent data loss.
- The delete function may not be supported according to the USB status. (lock, etc.)

Playback Effect

The unit supports various sound and playback effects : DJ EFFECT, SCRATCH, DJ PRO, AUTO DJ.

DJ EFFECT

It allows you to enjoy DJ EFFECT such as Flanger/ Phaser/Chorus/Delay sound effect.

1. Press **DJ EFFECT** to select a desired DJ EFFECT (FLANGER, PHASER, CHORUS, DELAY, OFF).
2. Turn **SCRATCH / CONTROL** clockwise or counterclockwise to adjust the DJ EFFECT level between 0 to 15.

Note

- The DJ EFFECT mode is displayed for 3 seconds when a **DJ EFFECT** Key is inputted.
- The gage starts at the beginning with an initial 7 level.
- The current gage level is displayed when adjusting gage.
- If the function changed or the unit is turned off and on, DJ EFFECT mode with DJ EFFECT is turned off.

SCRATCH Effect

You can output and mix the sound effects of the SCRATCH.

Rotating **SCRATCH / CONTROL** to mix the scratch sound.

- You can hear effect of scratch sound depending on the direction in which you rotate **SCRATCH / CONTROL**.

DJ PRO

It allows you to mix CLUB or FOOTBALL sound effect. Each mode has up to 3 sounds effect.

1. Press and hold DJ PRO. Pad "1" key repeatedly to select a desired DJ PRO sound effect.
2. Press a DJ Pro. Pad of desired sound.

Note

- Initial DJ Pro mode is CLUB sound effect.
- The DJ PRO sound is mixed when you press a **DJ Pro. Pad**.
- The currently playing DJ PRO sound is stopped and the selected DJ PRO sound outputs if you press a different **DJ Pro. Pad** while DJ PRO sound is playing.
- Display does not show Input **DJ Pro. Pad**.

AUTO DJ

Auto DJ blends the end of one song into the beginning of another for seamless playback. It equalizes volume across tracks/files for uninterrupted playback.

Press **AUTO DJ** on the remote control repeatedly, the display changes as followings. RANDOM (AUTO DJ RANDOM) -> RPT (AUTO DJ SEQUENTIAL) -> (AUTO DJ OFF)

Mode	Display Window	Description
OFF	- (AUTO DJ OFF)	-
RANDOM	RANDOM (AUTO DJ RANDOM)	The music is played randomly on this mode.
REPEAT	RPT (AUTO DJ SEQUENTIAL)	The music is played repeatedly on this mode.

Note

- AUTO DJ mode does not support searching for a section within a track/file or to play repeatedly or randomly.
- If you move to other functions or stop the music using ☐ on the unit (or ■ **ENTER** on the remote control) on AUTO DJ mode, AUTO DJ will be disable.
- AUTO DJ is not supported in the music file whose length is less than 60 seconds.
- During recording, AUTO DJ is not available.
- Only AUTO DJ SEQUENTIAL is selected when played the programmed list.

Using BLUETOOTH® wireless technology

About BLUETOOTH

Bluetooth is wireless communication technology for short range connection.

The sound may be interrupted when the connection interfered by the other electronic wave or you connect the bluetooth in the other rooms.

Connecting individual devices under **Bluetooth** wireless technology does not incur any charges. A mobile phone with **Bluetooth** wireless technology can be operated via the Cascade if the connection was made via **Bluetooth** wireless technology. Available Devices : Mobile phone, MP3, Laptop, PDA.

BLUETOOTH Profiles

In order to use **Bluetooth** wireless technology, devices must be able to interpret certain profiles. This unit is compatible with following profile.

A2DP (Advanced Audio Distribution Profile)

Listening to music stored on the BLUETOOTH devices

Pairing your unit and Bluetooth device

Before you start the pairing procedure, make sure the **Bluetooth** feature is activated on your **Bluetooth** device. Refer to your **Bluetooth** device's user guide. Once a pairing operation is performed, it does not need to be performed again.

1. Select the Bluetooth function by using **FUNCTION** until BT function is selected or pressing **Bluetooth** on the unit.
   "BT READY" appears on the display window.
2. Operate the **Bluetooth** device and perform the pairing operation. When searching for this unit with the **Bluetooth** device, a list of the devices found may appear in the **Bluetooth** device display depending on the type of **Bluetooth** device. Your unit appears as "LG OM7550(XX)".

Note

- XX means the last two digits of Bluetooth address. For example, if your unit has a Bluetooth address such as 9C:02:98:4A:F7:08, you will see "LG OM7550(08)" on your Bluetooth device.
- Depending on the Bluetooth device type, some devices may have a different pairing process. Enter the PIN code (0000) as needed.
- You can connect this unit with up to 3 Bluetooth devices simultaneously using the same method as described above, only in the Bluetooth function.
- The multi pairing connection is only supported on Android or iOS devices. (Multi pairing connection may not be supported depending on the connected device specifications.)
- Removable/detachable Bluetooth devices (Ex: Dongle etc.) will not support multi pairing.

3. When this unit is successfully connected with your **Bluetooth** device, "PAIRED" will be appear on the display window and change to **Bluetooth** device name soon.

Note

- "PAIRED" will momentarily appear on the display when you connect other devices for multi pairing.
- If the device name is unavailable, "_" will be displayed.

4. Listen to music.
   To play a music stored on your **Bluetooth** device, refer to your **Bluetooth** device's user guide.

Note

- When using **Bluetooth®** technology, you have to make a connection between the unit and the bluetooth device as close as possible and keep the distance.
  However, it may not work well in certain situations as described below :
  - There is a obstacle between the unit and the bluetooth device.
  - There is a device using same frequency with **Bluetooth®** technology such as a medical equipment, a microwave or a wireless LAN device.
- You should connect your bluetooth device to this unit again when you restart it.
- Even if this unit connected up to 3 Bluetooth devices in the Bluetooth mode, you can play and control music by using only one of the connected devices.

Note

- When this unit connected with multiple Bluetooth devices, only one device which you are playing keeps Bluetooth connection when you change the function to the others.
- The sound may be interrupted when the connection has interference from other electronic devices.
- You may not control the Bluetooth device with this unit.
- Depending on the type of the device, you may not be able to use the Bluetooth function.
- You can enjoy wireless system using phone, MP3, Notebook, etc.
- The more distance between the unit and the bluetooth device, the lower the sound quality becomes.
- Bluetooth connection will be disconnected when the unit is turned off or the Bluetooth device gets far from the unit.
- When Bluetooth connection is disconnected, connect the bluetooth device to the unit again.
- When a Bluetooth device is not connected, "BT READY" appears on the display window.
- When you use the BT function, adjust the volume to a proper level on the Bluetooth device.
- If it is not in the BT function, only one device can be connected.
- If a Bluetooth device is connected when using LG TV, LG TV is disconnected and the Bluetooth device is connected.
- When you connect Bluetooth device (iOS device etc.) to this unit or operate the device, the volume level can be synchronized with each other.

Using the Music Flow Bluetooth App

Note

Only Android OS is available to use "Music Flow Bluetooth" app with this unit.

About "Music Flow Bluetooth" App

"Music Flow Bluetooth" app brings a suite of new features to this unit.

To enjoy more features, you are recommended to download and install free "Music Flow Bluetooth" app.

Install "Music Flow Bluetooth" App onto Your Bluetooth Device

There are two ways to install "Music Flow Bluetooth" App onto Your **Bluetooth** Device.

Install "Music Flow Bluetooth" App through QR code

1. Install "Music Flow Bluetooth" app through QR code. Use the scanning software to scan the QR code.
2. Tap an icon for installation.
3. Tap an icon for downloading.

Note

- Make sure that your Bluetooth device is connected to the Internet.
- Make sure that your Bluetooth device has a scanning software application. If you don't have one, download one from "Google Android Market (Google Play Store)".
- Depending on the area, QR code may not work.

Install "Music Flow Bluetooth" App through "Google Android Market (Google Play Store)"

1. Tap the "Google Android Market (Google Play Store)" icon.
2. In the search bar, type in the "Music Flow Bluetooth" and search it.
3. In the search result list, find and tap "Music Flow Bluetooth" to start downloading Bluetooth app.
4. Tap an icon for installation.
5. Tap an icon for downloading.

Note

- Make sure that your Bluetooth device is connected to the Internet.
- Make sure that your Bluetooth device is equipped with "Google Android Market (Google Play Store)".

Activate Bluetooth with "Music Flow Bluetooth" App

"Music Flow Bluetooth" app helps to connect your **Bluetooth** device to this unit.

1. Tap "Music Flow Bluetooth" app icon on the home screen to open "Music Flow Bluetooth" app, and go to the main menu.
2. Tap [Menu] and select the unit you want.
3. If you want to get more information to operate, tap [Help] on the [Setting] menu.

Note

- "Music Flow Bluetooth " app will be available in the software version as follow;
  - Android O/S : Ver 4.0.3 (or later)
- If you use "Music Flow Bluetooth " app for operation, there would be some differences between "Music Flow Bluetooth " app and the supplied remote control. Use the supplied remote control as necessary.
- Depending on the Bluetooth device, "Music Flow Bluetooth " app may not work.
- After connection of "Music Flow Bluetooth " app, music may be output from your device. In this case, try connecting procedure again.
- If you operate the other applications or change the settings on your Bluetooth device while using "Music Flow Bluetooth " app, "Music Flow Bluetooth " app may operate abnormally.
- When "Music Flow Bluetooth " app operates abnormally, check your Bluetooth device and the connection of "Music Flow Bluetooth " app and then try to connect again.
- Depending on the smart phone's operating system, you have some differences for "Music Flow Bluetooth " operation.
- Check Bluetooth setting on your Bluetooth device if "Music Flow Bluetooth " app connection does not work well.

Radio Operations

Be sure that FM antenna is connected.
(Refer to page 19)

Listening to the radio

1. Press **FUNCTION** until FM appears in the display window.
   The last received station is tuned in.
2. Auto tuning :
   Press and hold **TUNING-/+** on the remote control or **I<< / >>I** on the unit for about two seconds until the frequency indication starts to change, then release. Scanning stops when the unit tunes in a station.

   Or

   Manual tuning :
   Press **TUNING-/+** on the remote control or **I<< / >>I** on the unit repeatedly.
3. Adjust the volume by rotating volume knob on the unit or by pressing **VOL +/-** on the remote control repeatedly.

Improving poor FM reception

Adjust the antenna to improve the reception when the radio has poor reception.

Presetting the Radio Stations

You can preset 50 stations for FM.

Before tuning, make sure to turn down the volume.

1. Press **FUNCTION** until FM appears in the display window.
2. Select the desired frequency by pressing **TUNING -/+** on the remote control or **I<< / >>I** on the unit.
3. Press **PROGRAM/MEMORY** on the remote control. A preset number will blink in the display window.
4. Press **PRESET·FOLDER ∧/∨** on the remote control to select the preset number you want.
5. Press **PROGRAM/MEMORY** on the remote control. The station is stored.
6. Repeat steps 2 to 5 to store other stations.
7. To listen a preset station, press **PRESET·FOLDER ∧/∨** or **0** to **9** numerical buttons on the remote control.

Deleting all the saved stations

1. Press and hold **PROGRAM/MEMORY** on the remote control for two seconds.
   "ERASEALL" will flash up on the unit display.
2. Press **PROGRAM/MEMORY** on the remote control to erase all the saved radio stations.

Sound adjustment

Setting the sound mode

This system has a number of pre-set surround sound fields. You can select a sound mode you want by using **SOUND EFFECT** on the remote control.

The displayed items for the Equalizer may be different depending on sound sources and effects.

On Display	Description
NATURAL	You can enjoy comfortable and natural sound.
Local Specialization equalizer (Optional)	Regionally optimized sound effect. (FORRO/FUNK/SERTANEJ/ DANGDUT/ARABIC/PERSIAN/ INDIA/REGUETON/MERENGUE/ SALSA/SAMBA/CUMBIA/AFRO/ AXE/TECNO BR)
AUTO EQ	Realizes the sound equalizer that is the most similar to the genre of which is included in the MP3 ID3 tag of song files.
POP CLASSIC JAZZ ROCK	This program lends an enthusiastic atmosphere to the sound, giving you the feeling you are at an actual rock, pop, jazz or classic concert.
BASS (BASS BLAST)	Reinforces the treble, bass and surround sound effect.
FOOTBALL	You can enjoy the sound effect FOOTBALL STADIUM.
FLAT	Provides balanced sound.
BOOST	Boosts the mid-range for sound reinforcement.
TRE/BASS (TREBLE/BASS)	Reinforces the treble and bass.
STANDARD	You can enjoy optimized sound.

Note

- On some speakers, sound may not be heard or heard in low sound depending on the sound mode.
- Maybe you need to reset the sound mode, after switching the input, sometimes even after the sound track/file changed.
- By pressing **BASS BLAST** on the unit you can directly select STANDARD or BASS (BASS BLAST) effect.

Setting the USER EQ

You can adjust the sound level of Bass and Treble as your preference.

1. Press **USER EQ** on the unit. "USER EQ" is displayed.
2. Select Bass, MID(MIDDLE) or TRE(TREBLE) by pressing **USER EQ** on the unit while "USER EQ" is displayed.
3. Rotate **SCRATCH/ CONTROL** to adjust the sound level.
4. Press **USER EQ** to save the setting.

Advanced Operations

Recording to USB

You can record a various sound source to USB. (CD, AUX, PORTABLE, Tuner, USB)

1. Connect the USB device to the unit.
2. Press **FUNCTION** to select a Function you want to record.

   One track/file recording - You can record to USB after playing a track/file you want.
   All tracks/files recording - You can record to USB in full stop status.
   Programmed list recording - After showing the Programmed list, you can record it to USB. (Refer to page 33)
3. Start the recording by pressing **USB REC/DEMO**.
   -If you connect both USB1 and USB2, press **USB REC/DEMO** when USB1 or USB2 which you want to record blinks in the display window.
4. To stop recording, press ☐ on the unit or ■ **ENTER** on the remote control.

Pausing recording

During recording, press ▶II on the unit or ▶/II on the remote control to pause recording. Press it again to restart recording.
(Tuner/AUX/PORTABLE only)

Note

You can control recorded MIC sound according to MIC volume when you record in AUDIO CD X1 speed REC.

To select recording bit rate and speed

1. Press and hold **USB REC/DEMO** for 3 seconds.
2. Press I◀◀/▶▶I on the remote control or I≪/≫I on the unit to select a bit rate.
3. Press **USB REC** to set.
4. Press I◀◀/▶▶I on the remote control or I≪/≫I on the unit to select a desired recording speed. (AUDIO CD only)

   X1 SPEED
   - You can listen to music while recording it.

   X2 SPEED
   - You can just record the music file.
5. Press **USB REC/DEMO** to finish the setting.

USB Copying

You can copy audio files in USB 1 to USB 2.

1. Connect a USB device including desired sound files to USB port (1) and select USB 1 Function.
2. Connect another USB device to USB port (2).
3. Press **USB REC/DEMO** to start recording.
4. To stop recording, press ☐ on the unit or ■ **ENTER** on the remote control.

The making of unauthorized copies of copy-protected material, including computer programs, files, broadcasts and sound recordings, may be an infringement of copyrights and constitute a criminal offense. This equipment should not be used for such purposes.
Be responsible
Respect copyrights

Note

- You can check the recording percentage rate for the USB record on the display window during the recording. (MP3/WMA, CD Only)
- During recording MP3/WMA, there is no sound.
- For stable recording, the output sound level goes down on its own when you record music from CD to USB.
- You can only change volume level between MIN and 30 during recording. (Only CD function)
- When you stop recording during playback, the file that has been recorded at that time will be stored. (Except MP3/WMA files)
- Do not remove the USB device or turn off the unit during USB recording. If does not, an incomplete file may be made and not deleted on PC.
- If USB recording does not work, the message like "NO USB", "ERROR", "USB FULL" or "NO REC" is displayed on the display window.
- Multi card reader device or External HDD can not be used for USB recording.
- A file is recorded by about 512 Mbyte when you record for a long term.

Note

- You can record various sound using MIC/DJ Pro/Scratch/DJ Effect. (Except USB Copying)
- You can control recorded MIC sound according to MIC volume.
- You may not store more than 2000 files.
- You can not record in AUTO DJ mode.
- On CD function, sound of MIC, DJ Pro, Scratch, DJ Effect is recorded only during AUDIO CD X1 speed REC. It is recorded AUDIO CD source too.
- In case of the unsupported MP3/WMA file, the file recording may be stopped.
- It'll be stored as follows.

AUDIO CD	MP3/WMA
CD_REC TRK_0001 TRK_0002 -	FILE_REC ABC(File name) DEF(File name) -
The other source*	Tuner
OTHERS_REC AUDIO_0001 AUDIO_0002 -	TUNER_REC AUDIO_0001_107-7FM -

* : AUX and the like.

Tuner : The current recording frequency is shown.

Programmed Playback

The program function enables you to store your favorite files from any disc or USB device.

A program can contain 20 tracks/files for each media. (CD, USB1,USB2) Possible to save a total of 60 tracks/files.

Making Programmed list

It is supported only on stop status.

1. Press **PROGRAM/MEMORY** on the remote control.
2. Press **I◀◀/▶▶I** on the remote control to select a track/file.
3. Press **PROGRAM/MEMORY** on the remote control to save and select a next track/file.
4. Repeat steps 2 - 3 to store other tracks/files. (You can modify the list by pressing **PRESET·FOLDER Λ/V** on the remote control to select the program number.)
5. Press **PROGRAM/MEMORY** on the remote control once again.

To play the programmed list, press **▶/II** after you make the list.

Note

When making or modifying the programmed list, REPEAT mode is off.

Deleting Programmed list

Deleting function only works in the edit mode.

1. Press **PROGRAM/MEMORY** on the remote control in stop status.
2. Select a song by pressing **PROGRAM/MEMORY** or **PRESET·FOLDER Λ/V** on the remote control repeatedly.
3. Press **DELETE** while a song is selected.

Note

- Program is switched off in the case below.
  - Changing to a different function.
  - Turning off and on the unit.
  - Operating the numeric buttons on the remote control.
- Programmed list is cleared in the case below.
  - Removing the disc or the USB device.
  - Deleting or recording music files in the USB device.
  - Unplugging the Power Cord.

Other Operations

Turn off the sound temporarily

Press **MUTE** on the remote control to mute your sound.

You can mute your unit, for example, to answer the telephone, the "MUTE" will appear in the display window.

To cancel it, press **MUTE** again or change the volume level.

CHILDSAFE Mode

This function helps to prevent you from being surprised when you turn on the unit in case that the volume of the unit is set at a high level.

To turn on CHILDSAFE mode, press and hold ENTER on the unit when the volume of the unit is "MIN".

In CHILDSAFE mode, the volume increase gradually.

To turn off CHILDSAFE mode, press and hold ENTER on the unit when the volume of the unit is "MIN"

Note

In case of CD, USB, BT or LG TV Function, CHILDSAFE mode does not work after about 2 minutes from power on the unit even if this mode is enabled.

Displaying file information (ID3 TAG)

While playing an MP3 file containing file information, you can display the information by pressing **INFO**.

DEMO

In the power off state, press **USB REC/DEMO** on the unit once. The unit will power on and display the each of functions with demo sound in the display window. To cancel the DEMO function, press **USB REC/DEMO** once more.

Note

- While in DEMO, this unit will keep DEMO status even if you unplug the power cord connection.
- You can enjoy other functions during the DEMO, the DEMO will temporarily pause.
  - Without input key in 10 sec, the DEMO will play back automatically.

Using Microphone

1. Connect your microphone to the MIC jack.
2. Play the music you want.
3. Sing along with the accompaniment. Adjust the microphone volume by rotating **MIC VOL.** clockwise or counterclockwise on the unit.

Note

- When not using the microphone, set the **MIC VOL.** to minimum or turn off the MIC and remove the microphone from the MIC jack.
- If the microphone is set too near the speaker, a howling sound may be produced. In this case, move the microphone away from the speaker or decrease the sound level by using the **MIC VOL.**.
- If sound through the microphone is extremely loud, it may be distorted. In this case, rotate **MIC VOL.** to minimum.

LIGHTING

The function is to create a Club like atmosphere by operating speaker lighting.

1. Press **LIGHTING** on the unit.

   The mode changes each time you press it :
   OFF → VOLCANO → POLICE → THUNDER → PSYCHE → CAOS → OFF

Note

- Lighting function is available in all functions.
- Lighting mode retains its previous mode when you first press **LIGHTING**, press again to change modes.

Setting the Clock

1. Turn the unit on.
2. Press and hold **CLOCK**.
3. Select time mode by pressing **I◄◄ / ►►I** on the remote control.
   - AM 12:00 (for an AM and PM display) or 0:00 (for a 24 hour display)
4. Press **SET** to confirm your selection.
5. Select the hours by pressing **I◄◄ / ►►I** on the remote control.
6. Press **SET**.
7. Select the minutes by pressing **I◄◄ / ►►I** on the remote control.
8. Press **SET**.

Setting the Clock through "Music Flow Bluetooth" App

Install "Music Flow Bluetooth" app on your Android device. (Refer to page 27)

Your unit's clock will be automatically synchronized with your device by activating **Bluetooth** connection through "Music Flow Bluetooth" app.

Using your player as an alarm clock

1. Turn the unit on.
2. Press and hold **ALARM**.
3. Press **I◀◀ / ▶▶I** on the remote control to change the hours and minutes and press **SET** to save.
4. Press **I◀◀ / ▶▶I** on the remote control to select function and press **SET** to save.
   - Press **I◀◀ / ▶▶I** on the remote control to select a memory No. when you select Tuner and then, press **SET**.
   If there is no memory No., this step is skipped.
5. Press **I◀◀ / ▶▶I** on the remote control to change the volume and press **SET** to save. The clock icon "🕒" shows that the alarm is set.

Note

- If you set the clock time, you can check the time by pressing **CLOCK** even when the player is turned off.
- You can set alarm after you set the clock time.
- If you set the clock time and alarm, you can check the alarm icon "🕒" by pressing **CLOCK** even when the unit is turned off.
- If you set the clock time and alarm, you can check the alarm icon "🕒" and setting informaiton by pressing **ALARM** even when the unit is turned off.
- You can select ALARM ON/OFF mode by pressing **ALARM**.

Sleep Timer Setting

Press **SLEEP** repeatedly to select delay time between 10 and 180 minutes. After the delay time, the unit will be turned off.

To cancel the sleep function, press **SLEEP** repeatedly until "SLEEP 10" appears, and then press **SLEEP** once again while "SLEEP 10" is displayed.

Note

- You can check the remaining time before the unit is turned off.
- Press **SLEEP**. The remaining time appears in the display window.

Dimmer

Press **SLEEP** once. The display window will be darkened by half. To cancel it, press **SLEEP** repeatedly until dim off.

Note

- All the LED turns off when Dimmer is being operated.

Auto power down

This unit will turn itself off to save electricity in the case were the main unit is not connected to an external device and is not used for 20 minutes. The unit will also turn itself off after six hours if the Main unit has been connected to another device using the analog inputs.

How to disconnect the wireless network connection or the wireless device.

Turn off the unit by pressing the power button for more than 5 seconds.

AUTO POWER On

This unit automatically turns on by an input source : LG TV or **Bluetooth**

If you try to connect your **Bluetooth** device, this unit turns on and connects your **Bluetooth** device. You can play your music.

Note

- Depending on the connected device, this function may not operate.
- Depending on the connected device, the unit turns on but Bluetooth function may not be connected.
- If you disconnect Bluetooth connection by this unit, some Bluetooth devices try to connect to the unit continually. Therefore it is recommended to disconnect the connection before turning off the unit.
- If you try to connect to the "Music Flow Bluetooth" app, Bluetooth function of this unit is turned on.
- If you turn on the unit using LG TV or Bluetooth function, proper function of this unit is turned on.
- If you have already paired with this unit, automatically this unit can turn on by an input source when this unit is turned off.
- If you turn off the unit by pressing the power button for more than 5 seconds, Auto Power On function is disabled. To activate it, turn on the unit.

Auto function change

This unit recognizes input signals such as **Bluetooth** and LG TV and then changes suitable function automatically.

When you try to connect Bluetooth device

When you try to connect your **Bluetooth** device to this unit, Bluetooth function is selected. Play your music on the **Bluetooth** device.

When LG TV is connected

When you turn on your LG TV connected by LG Sound Sync, this unit changes the function to LG TV. You can hear the sound from your TV.

Note

- This function is not available during recording or deleting.
- This function only works with devices that were previously connected.

LG Sound Sync

Sound Sync Wireless

You can control some functions of this unit by your TV's remote control with LG Sound Sync. It is compatible with LG TV that supports LG Sound Sync. Make sure your TV has the LG Sound Sync logo.

Controllable function by LG TV's remote control : Volume up/down, mute

Refer to the TV's instruction manual for the details of LG Sound Sync.

1. Turn on the unit by pressing ⏻/I (Power).
2. Press **FUNCTION** until LG TV function is selected.
3. Set up the sound output of TV to listen to the sound through this unit :
   TV setting menu [Sound] -> [TV Sound output] -> [LG Sound Sync (Wireless)]
   "PAIRED" appears on the display window for about 3 seconds and then you can see "LG TV" on the display window if the TV and this unit are connected normally.

Note

- You can also use the remote control of this unit while using LG Sound Sync. If you use TV's remote control again, the unit synchronizes with the TV.
- If the connection fails, check the conditions of this unit and your TV : power, function.
- Make sure of the condition of this unit and the connection in the cases below when using LG Sound Sync.
  - Turn off the unit.
  - Changing to a different function.
  - Disconnecting the wireless connection caused by interference or a distance.
- The amount of time to turn off this unit is different depending on your TV.
- If you try to change the function on using the LG TV function, volume will be change according to the LG TV volume level.
- Details of TV setting menu vary depending on the manufacturers or models of your TV.
- If you connect LG Sound Sync when "Music Flow Bluetooth" app is connected, control through the app is available.
- If you turned off the unit directly by pressing ⏻/| (Power), LG Sound Sync will be disconnected. To use this function again, you should reconnect the TV and the unit.
- If an LG TV is connected when using Bluetooth, Bluetooth is disconnected and the LG TV is connected.

Troubleshooting

Problem	Cause & Solution
The unit does not work properly.	• Turn off the power of this unit and the connected external device (TV, Woofer, DVD-player, Amplifier, etc.) and turn it on again. • Disconnect the power cord of this unit and the connected external device (TV, Woofer, DVD-player, Amplifier, etc.) and then try connecting again. • Previous setting may not be saved when device power is shut off.
No Power.	• The power cord is not plugged in. Plug in the power cord. • Check whether electricity failed. Check the condition by operating other electronic devices.
No sound.	• Check whether you select right function. Press **FUNCTION** and check the selected function.
The unit does not start playback.	• An unplayable disc is inserted. Check the playable disc. • No disc is inserted. Insert a disc. • The disc is dirty. Clean the disc. (Refer to page 41) • The disc is inserted upside down. Place the disc with the label or printed side facing upwards.
Radio stations cannot be tuned in properly.	• The antenna is positioned or connected poorly. Connect the antenna securely. • The signal strength of the radio station is too weak. Tune to the station manually. • No stations have been preset or preset stations have been cleared (when tuning by scanning preset channels). Preset some radio stations, see page 29 for details.
The remote control does not work properly.	• The remote control is too far from the unit. Operate the remote control within about 7 m. • There is an obstacle in the path of the remote control and the unit. Remove the obstacle. • The batteries in the remote control are exhausted. Replace the batteries with new ones.
No speaker light	• Check the speaker light effects by pressing **LIGHTING**.
LG Sound Sync does not work.	• Check whether your LG TV supports LG Sound Sync. • Check connection of LG Sound Sync. • Check sound setting of your TV and this unit.

Maintenance

Notes on Discs

Handling Discs

Never stick paper or tape on the disc.

Storing Discs

After playing, store the disc in its case. Do not expose the disc to direct sunlight or sources of heat and never leave it in a parked car exposed to direct sunlight.

Cleaning Discs

Fingerprints and dust on the disc can cause poor picture quality and sound distortion. Before playing, clean the disc with a clean cloth. Wipe the disc from the center to out.

Do not use strong solvents such as alcohol, benzine, thinner, commercially available cleaners, or anti-static spray intended for old vinyl records.

Handling the Unit

When shipping the unit

Please save the original shipping carton and packing materials. If you need to ship the unit, for maximum protection, re-pack the unit as it was originally packed at the factory.

Keeping the exterior surfaces clean

Do not use volatile liquids such as insecticide spray near the unit. Wiping with strong pressure may damage the surface. Do not leave rubber or plastic products in contact with the unit for a long period of time.

Cleaning the unit

To clean the player, use a soft, dry cloth. If the surfaces are extremely dirty, use a soft cloth lightly moistened with a mild detergent solution. Do not use strong solvents such as alcohol, benzine, or thinner, as these might damage the surface of the unit.

Maintaining the Unit

The unit is a high-tech, precision device. If the optical pick-up lens and disc drive parts are dirty or worn, the picture quality could be diminished. For details, please contact your nearest authorized service center.

General specifications

General	
Power requirements	Refer to the main label.
Power consumption	Refer to the main label.
	Networked standby : 0.4 W (If all network ports are activated.)
Dimensions (W x H x D)	430 mm x 665 mm x 468 mm
Net Weight (Approx.)	22.7 kg
Operating temperature	5 °C to 35 °C
Operating humidity	60 %
Bus Power Supply	5 V ⎓ 500 mA

Inputs / Outputs	
AUX IN / OUT	2.0 Vrms (1 kHz, 0 dB), 600 Ω, RCA jack (L, R)
PORT. IN	1.2 Vrms (3.5 Ø jack)
MIC	20 mV

Tuner	
FM Tuning Range	87.5 to 108.0 MHz or 87.50 to 108.00 MHz

CD	
Frequency Response	40 to 20,000 Hz
Signal-to-noise ratio	75 dB
Dynamic range	80 dB

Amplifier	
Total output (RMS)	1000 W
FRONT (RMS)	500 W x 1 (6 Ω at 150 Hz)
MID (RMS)	500 W x 1 (6 Ω at 1 kHz)
THD	20 %

- Design and specifications are subject to change without notice.

Trademarks and Licenses



Bluetooth wireless technology is a system which allows radio contact between electronic devices.

Connecting individual devices under **Bluetooth** wireless technology does not incur any charges. A mobile phone with **Bluetooth** wireless technology can be operated via the Cascade if the connection was made via **Bluetooth** wireless technology.

The ***Bluetooth®*** word mark and logos are owned by the Bluetooth SIG, Inc. and any use of such marks by LG Electronics is under license.

Other trademarks and trade names are those of their respective owners.



OM7550-FB.DAUSLLK_FULL BOOK_ENG_MFL69001807.indd 44 2015-05-20 5:25:09