LG
Life's Good

OWNER'S MANUAL

WASHING MACHINE

Please read this manual carefully before operating your washing machine and retain it for future reference.

F1496AD(P)2(1~9)
F1296AD(P)2(1~9)

MFL67782828
ver.ver.071015.05

www.lg.com

Contents

Contents.....2

Product Features.....3

Important safety instructions

Important safety instructions 4
Basic safety precautions 5
Save these instructions.....6
Safety instructions for use.....7

Specifications.....8

Installation

Removing packing 9
Removing transit bolts 9
Installation place requirements 10
Connecting water supply hose.....12
Installation of drain hose 14
Leveling.....15

How to use washer

Operating washing machine 17
Care before washing.....18
Washing program table.....19
Drying Program Table.....20
Extra options 21
Operating data 21
Control panel.....22
Additional program.....23
- Time Delay.....23
- Dry 23
- Intensive 23
- Pre Wash 23
- Medic Rinse 23
Options.....24
- Spin.....24
- Temp. 24
Other functions.....24
- Spin Only 24
Child Lock 25
Beep On/Off 25
Tub Clean 26
Door Lock 26
Dry Only 27

Thank you for buying a LG Fully Automatic Washing Machine.

Please read your owner's manual carefully, it provides instruction on safe installation, use and maintenance. Retain it for future reference.

Record the model and serial number of your washing machine.

Model No.
Serial No.
Date of Purchase

Adding detergent

Adding detergent and fabric softener..29

Maintenance

The water inlet filter.....31
The drain pump filter 32
Dispenser drawer.....33
The washing drum 34
Cleaning your washer 34
Cold conditions 34

Troubleshooting guide

Diagnosing problems 35
Error messages.....37
Using SMARTDIAGNOSIS™.....38

Terms of warranty.....39

Product Features



- **Inverter Direct Drive system**
  The advanced Brushless DC motor directly drives the drum without belt and pulley.



- **6 Motion**
  Washer is able to perform various drum actions or a combination of different actions depending on the wash program selected.
  Combined with a controlled spin speed and the ability of the drum to rotate both left and right, the wash performance of the machine is greatly improved, giving you perfect results every time.



- **Protection against creases**
  With the alternating rotation of the drum, creasing is minimized.



- **Built-in heater**
  Internal heater automatically heats the water to the best temperature on selected cycles.



- **More economical with Intelligent Wash system**
  Intelligent Wash System detects the size of load and water temperature, and then determines the optimum water level and washing time to minimize energy and water consumption.



- **Child Lock**
  The Child Lock prevents children from pressing any button to change the settings during operation.



- **Low noise speed control system**
  By sensing the amount of load and balance, it evenly distributes load to minimize the spinning noise level.



- **Auto Restart**
  Auto Restart allows the program to restart all by itself in case of power failure. It does from the stage where it stopped.

Important safety instructions

READ ALL INSTRUCTIONS AND EXPLANATION OF THE INSTALLATION BEFORE USE.

⚠ WARNING

For your safety, the information in this manual must be followed to minimize the risk of fire or explosion, electric shock, or to prevent property damage, injury to persons, or death.

Your Safety and the safety of others are very important.

We have provided many important safety messages in this manual and on your appliance. Always read and obey all safety messages.

⚠ This is the safety alert symbol.
This symbol alerts you to potential hazards that can kill or hurt you and others.
All safety messages will follow the safety alert symbol and either the word DANGER, WARNING or CAUTION.

These words mean:

⚠ DANGER

You will be killed or seriously injured if you don't immediately follow instructions.

⚠ WARNING

You can be killed or seriously injured if you don't follow instructions.

⚠ CAUTION

You may be slightly injured or cause damage to the product if you do not follow instructions.

All safety messages will tell you what the potential hazard is, tell you how to reduce the chance of injury, and tell you what can happen if the instructions are not followed.

Important safety instructions

■ Basic safety precautions

⚠ WARNING

To reduce the risk of fire, electric shock, or injury to persons when using the washer, follow basic precautions, including the following:

- **Before installation, check exterior damages. If it has, do not install.**
- **Do not install or store the washer where it will be exposed to the weather.**
- **Do not tamper with controls.**
- **Do not repair or replace any part of the washer or attempt any servicing unless specifically recommended in the user-maintenance instructions or published user-repair instructions that you understand and have the skills to carry out.**
- **Keep the area underneath and around your appliances free of combustible materials such as lint, paper, rags, chemicals, etc.**
- **The appliance is not intended for use by young children or infirm persons without supervision. Do not allow children to play on, with, or inside this or any other appliance.**
- **Keep small animals away from the appliance.**
- **Do not leave the washer door open.** An open door could entice children to hang on the door or crawl inside the washer.
- **Never reach into washer while it is moving. Wait until the drum has completely stopped.**
- The laundry process can reduce the flame retardant of fabrics. **To avoid such a result, carefully follow the garment manufacturer's wash and care instructions.**
- **Do not wash or dry articles that have been cleaned in, washed in, soaked in, or spotted with combustible or explosive substances (such as wax, oil, paint, gasoline, degreasers, dry-cleaning solvents, kerosene, etc.) which may ignite or explode.** Oil may remain in the tub after a whole cycle resulting in fire during drying.
  So, do not load oiled clothes.
- **Do not slam the washer door closed or try to force the door open when locked.** This could result in damage to the washer.
- **When the machine runs high temperature, the front door may be very hot. Don't touch it.**
- **To minimize the possibility of electric shock, unplug this appliance from the power supply or disconnect the washer at the household distribution panel by removing the fuse or switching off the circuit breaker before attempting any maintenance or cleaning.**
- **When unplugging power cord, do not pull out by grasping the cord.** Otherwise, the power cord may be damaged.
- **Never attempt to operate this appliance if it is damaged, malfunctioning, partially disassembled, or has missing or broken parts, including a damaged cord or plug.**

Important safety instructions

■ Basic safety precautions

⚠ WARNING

To reduce the risk of fire, electric shock, or injury to persons when using the washer, follow basic precautions, including the following:

- **Before discarding an old machine unplug it. Render the plug useless. Cut off the cable directly behind the appliance to prevent misuse.**
- **When a product was under water, Please call service center.** There is a risk of electric shock and fire.
- **Appliance connected to the water mains using new hose-sets. Old hose-sets should not be reused.**
- **To reduce the risk of personal injury, adhere to all industry recommended safety procedures including the use of long sleeved gloves and safety glasses.** Failure to follow all of the safety warnings in this manual could result in property, personal injury or death.
- **Do not push down the door excessively, when washer door open.** This could topple over the washer.

■ Save these instructions

GROUNDING INSTRUCTIONS

This appliance must be grounded. In the event of malfunction or breakdown, grounding will reduce the risk of electric shock by providing a path of least resistance for electric current. This appliance is equipped with a cord having an equipment-grounding conductor and grounding plug. The plug must be plugged into an appropriate outlet that is properly installed and grounded in accordance with all local codes and ordinance.

- Do not use an adapter this will defeat the grounding plug.
- If you don't have the proper outlet, consult an electrician.

⚠ WARNING

Improper connection of the equipment-grounding conductor can result in electric shock. Check with a qualified electrician or serviceman if you are in doubt as to whether the appliance is properly grounded. Do not modify the plug provided with the appliance - if it does not fit the outlet, have a proper outlet installed by a qualified electrician.

Important safety instructions

■ Safety instructions for use

To minimize the risk of fire within the inner bowl, the following should be observed:

- **Items that have been spotted or soaked with vegetable or cooking oil constitute a fire hazard and should not be placed in a tumble dryer.**
  Oil-affected items can ignite spontaneously, especially when exposed to heat sources such as in a tumble dryer.
  The items become warm, causing an oxidation reaction in the oil. Oxidation creates heat. If the heat cannot escape, the items can become hot enough to catch fire. Piling, stacking or storing oil-affected items can prevent heat from escaping and so create a fire hazard. If it is unavoidable that fabrics that contain vegetable or cooking oil or have been contaminated by hair care products be placed in a tumble dryer they should first be washed in hot water with extra detergent-this will reduce, but not eliminate, the hazard.
  The 'cool down' cycle of tumble dryers should be used to reduce the temperature of the items.
  They should not be removed from the tumble dryer or piled or stacked while hot.
- **Items that have been previously cleaned in, washed in, soaked in or spotted with petrol/gasoline, dry-cleaning solvents or other flammable or explosive substances should not be placed in a tumble dryer.**
  Highly flammable substances commonly used in domestic environments include acetone, denatured alcohol, petrol/gasoline, kerosene, spot removers (some brands), turpentine, waxes and wax removers.
- **Items containing foam rubber (also known as latex foam) or similarly textured rubber like materials should not be dried in a tumble dryer on a heat setting.** Foam rubber materials can, when heated, produce fire by spontaneous combustion.
- **Fabric softeners or similar products should not be used during a drying cycle,** to eliminate the effects of static electricity unless this practice is specifically recommended by the manufacturer of the fabric softener or product.
- **Undergarments that contain metal reinforcements should not be placed in a tumble dryer.**
  Damage to the tumble dryer can result if metal reinforcements come loose during drying. When available a drying rack could be used for such items.
- **Plastic articles such as shower caps or babies waterproof napkin covers should not be placed in a tumble dryer.**
- **Rubber-backed articles, clothes fitted with foam rubber pads, pillows, rubber boots and rubber-coated tennis shoes should not be placed in a tumble dryer.**

Specifications

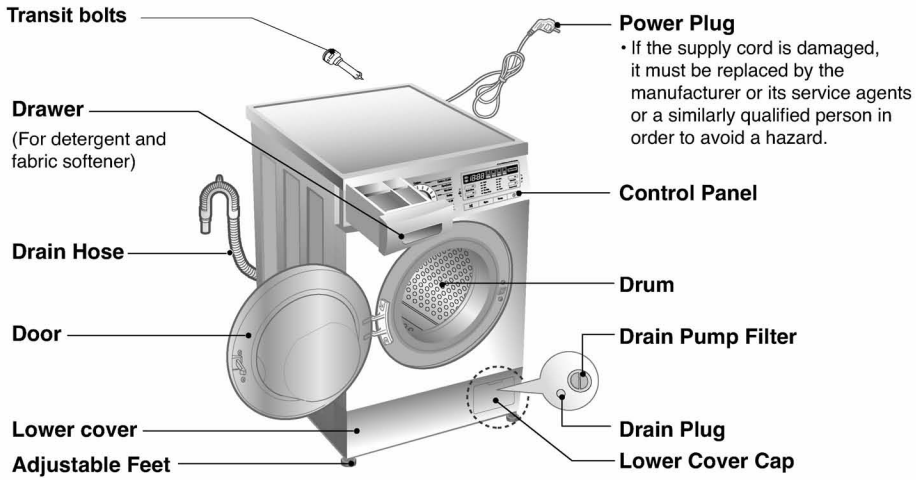

■ Name	: Front loading washing machine
■ Power supply	: 220 V~, 50 Hz
■ Size	: 600 mm(W) × 550 mm(D) × 850 mm(H)
■ Weight	: 65 kg
■ Max.Watt	: 2100 W (Wash) / 1250 W (Dry)
■ Capacity	: 8kg(Wash)/4kg(Dry)
■ Permissible water pressure	: 100 ~ 1000 kPa (1.0 - 10.0 kgf / cm^2)

* The appearance and specifications may vary without notice to improve the quality of the unit.

■ Accessories

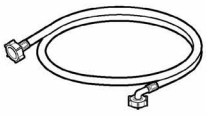

Inlet hose(1EA)



Spanner

Installation

■ Removing packing

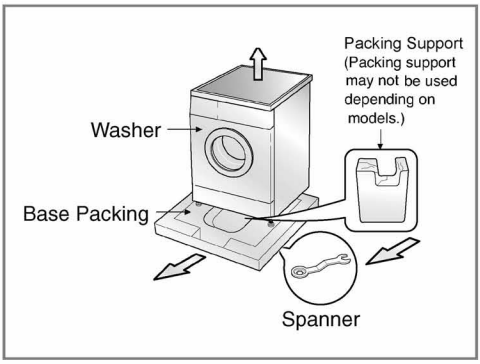

1. Remove the cardboard box and styrofoam packing.
2. Lift the washing machine and remove the base packing.
3. Remove the tape securing the power supply cord and drain hose.
4. Remove the inlet hose from the drum.

NOTE

- Keep the spanner provided for future use.

⚠WARNING

- Packaging material (e.g. Films, Styrofoam) can be dangerous for children. There is a risk of suffocation ! **Keep all packaging well away from children.**

■ Removing transit bolts

To prevent internal damage during transport, the 4 special bolts are locked.
Before operating the washer, remove the bolts along with the rubber bungs.
If they are not removed, it may cause heavy vibration, noise and malfunction.

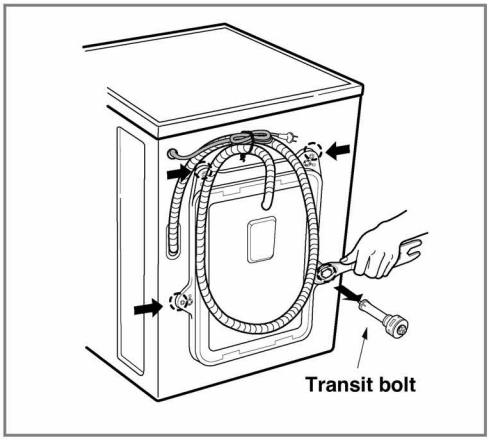

1. Unscrew the 4 bolts with the spanner supplied.
2. Take out the 4 bolts along with the rubber bungs by slightly twisting the bung.

NOTE

- Keep the transit bolts for future use.

3. Close the holes with the caps supplied.

Installation

■ Installation place requirements

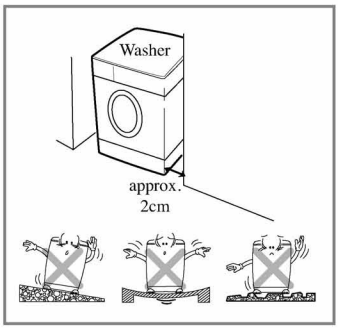

▶ Location

- **Level floor :**
  Allowable slope under entire washer is 1°
- **Power outlet :**
  Must be within 1.5 meters of either side of location of washer.
  Do not overload the outlet with more than one appliance.
- **Additional Clearance :**
  For Wall, 10cm:rear / 2cm : right & left side
  Do not place or store laundry products on top of washer at any times.
  They can damage the finish or controls.

▶ Positioning

- Install the washer on a flat hard floor.
- Make sure that air circulation around the washer is not impeded by carpets, rugs, etc.
- Never try to correct any unevenness in the floor with pieces of wood, cardboard or similar materials under the washer.
- If it is impossible to avoid positioning the washer next to a gas cooker or coal burning stove,an insulating(85x60cm) covered with aluminum foil on the side facing the cooker or stove,must be inserted between the two appliance.
- The washer must not be installed in rooms where the temperature can drop below 0°C.
- Please ensure that when the washer is installed, it is easily accessible for the engineer in the event of a breakdown.
- With the washer installed, adjust all four feet using the transit bolt spanner provided ensuring the appliance is stable, and a clearance of approximately 20mm is left between the top of the washer and the underside of any work-top.
- This equipment is not designed for maritime use or for use in a mobile installations such as caravans, aircraft etc.

▶ Electrical connection

- Do not use an extension cord or double adapter.
- If the supply cord is damaged, it must be replaced by the manufacturer or its service agents or similarly qualified person in order to avoid a hazard.
- Always unplug the machine and turn off the water supply after use.
- Connect the machine to an earthed socket in accordance with current wiring regulations.
- The appliance must be positioned so that the plug is easily accessible.
- Repairs to the washing machine must only be carried out by qualified personnel.
  Repairs carried out by inexperienced persons may cause injury or serious malfunctioning. Contact your local service center
- Do not install your washing machine in rooms where temperature below freezing may occur. Frozen hoses may burst under pressure. The reliability of the electronic control unit may be impaired at temperatures below freezing point.
- If the appliance is delivered in the winter months and temperatures are below freezing : Place the washing machine at room temperature for a few hours before putting it into operation.

Installation

⚠ CAUTION

CAUTION concerning the Power cord

- Most appliances recommend they be placed upon a dedicated circuit; that is, a single outlet circuit which powers only that appliance and has no additional outlets or branch circuits. **Check the specification page of this owner's manual to be certain.**
- **Do not overload wall outlets.** Overloaded wall outlets, loose or damaged wall outlets, extension cords, frayed power cords, or damaged or cracked wire insulation are dangerous. Any of these conditions could result in an electric shock or fire.
- **Periodically examine the cord of your appliance,** and if its appearance indicates damage or deterioration, unplug it, discontinue use of the appliance, and have the cord replaced with an exact replacement part by an authorized servicer.
- **Protect the power cord from physical or mechanical abuse,** such as being twisted, kinked, pinched, closed in a door, or walked upon. Pay particular attention to plugs, wall outlets, and the point where the cord exits the appliance.
  If the appliance is supplied from a cord extension set or an electrical portable outlet device, The cord extension set on electrical portable outlet device must be positioned so that it is not subject to splashing or ingress of moisture.

⚠ CAUTION

- The appliance is not intended for use by young children or infirm persons without supervision.
- Young children should be supervised to ensure that they do not play with appliance.

▶ BS plug safety details (for U.K. user)

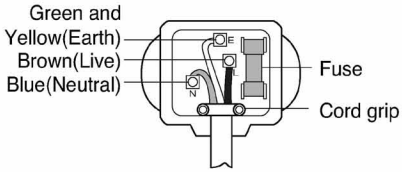

Important
The wires in this mains lead are coloured in accordance with the following code:
Green and yellow: Earth
Blue: Neutral
Brown: Live
This appliance must be earthed.

As the colours of the wires in the mains lead of this apparatus may not correspond with the coloured markings identifying the terminals in your plug, proceed as follows:
The wire which is coloured Green and Yellow must be connected to the terminal in the plug which is marked with the letter E or by the earth symbol ⏚ or coloured Green or Green and Yellow.
The wire which is coloured Blue must be connected to the terminal which is marked with the letter N or coloured Black.
The wire which is coloured Brown must be connected to the terminal which is marked with the letter L or coloured Red.
If a 13 amp (BS 1363) plug is used, fit a 13 amp BS 1362 fuse.

Installation

■ Connecting water supply hose

- Water supply pressure must be between 100 kPa and 1000 kPa (1.0 - 10.0 kgf / cm^2).
- Do not strip or crossthread when connecting inlet hose to the valve.
- If the water supply pressure is more than 1000 kPa, a decompression device should be installed.
- Periodically check the condition of the hose and replace the hose if necessary.

▶ Step1 : Check rubber seal inlet hose

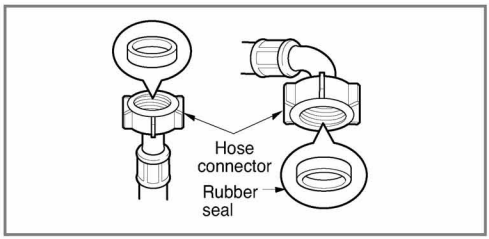

- Two rubber seals are supplied with the water inlet hoses.
  They are used for preventing water leaks.
  Make sure the connection to taps is sufficiently tight.

▶ Step2 : Connect hose to water tap

Type-A : Connecting Screw-type hose to tap with thread

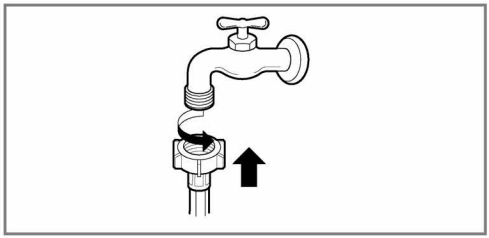

- Screw the hose connector onto water supply tap.

Type-B : Connecting Screw-type hose to tap without thread

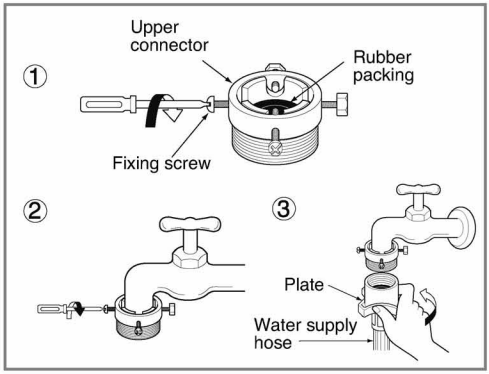

1. Unscrew the adapter ring plate and the 4 adapter retaining screws.
2. Push the adapter onto the end of the tap so that the rubber seal forms a watertight connection. Tighten the adapter ring plate and the 4 screws.
3. Push the water supply hose vertically upwards so that the rubber packing within the hose can adhere completely to the tap and then tighten it by screwing it to the right.

Installation

Type-C : Connecting one touch type hose to tap without thread

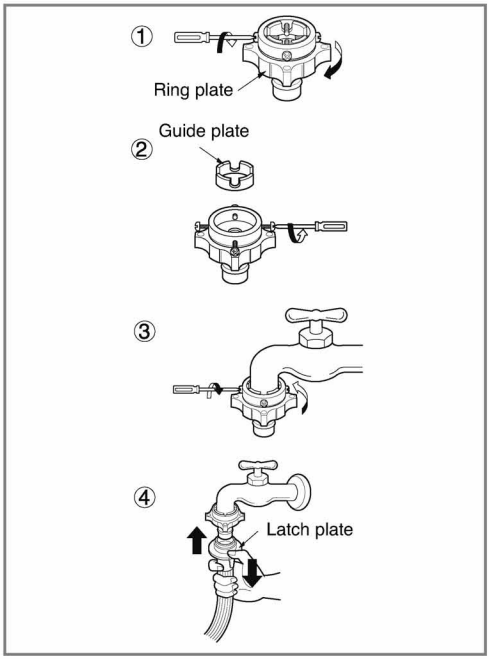

1. Unscrew the adapter ring plate and the 4 adapter retaining screws.
2. Remove the guide plate if the tap is too large to fit the adapter.
3. Push the adapter onto the end of the tap so that the rubber seal forms a watertight connection.
   Tighten the adapter ring plate and the 4 screws.
4. Pull the connector latch plate down, push the inlet hose onto the adapter, and release the connector latch plate. Make sure the adapter locks into place.

NOTE

- After connecting inlet hose to water tap, turn on the water tap to flush out foreign substances (dirt, sand or sawdust) in the water lines. Let water drain into a bucket, and check the water temperature.

► Step3: Connect hose to washer

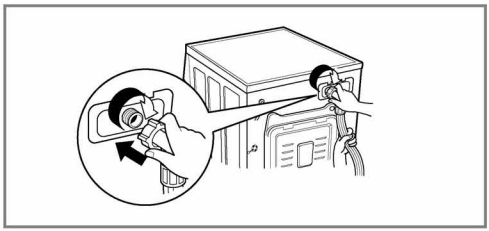

- Make sure that there are no kinks in the hose and that they are not crushed.

► When your washer has two valves.

- The Inlet hose which has red connector is for the hot water tap.
- If the washer has two valves, the energy is saved by using hot valve.

NOTE

- After completing connection, if water leaks from the hose, repeat the same steps.
  Use the most conventional type of faucet for water supply. In case the faucet is square or too big, remove the spacing ring before inserting the faucet into the adaptor.

Please use the horizontal tap		
Horizontal tap 	Extension tap 	Square tap 

Installation

■ Installation of drain hose

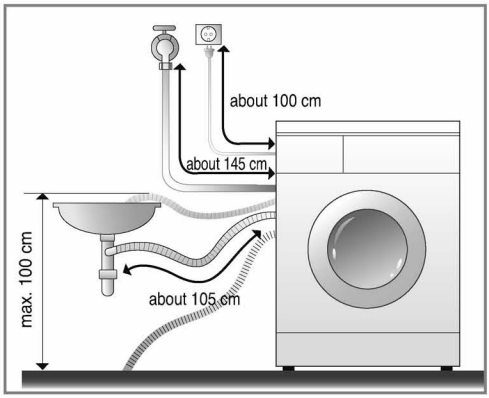

- The drain hose should not be placed higher than 100 cm above the floor. Water in the washer does not drain or drains slowly.
- Securing the drain hose correctly will protect the floor from damage due to water leakage.
- If the drain hose is too long, do not force back into the washer.
  This will cause abnormal noise.

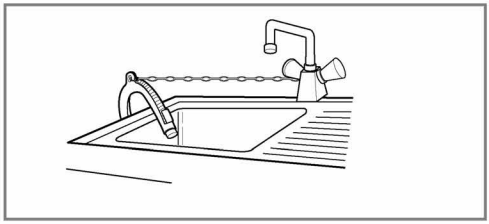

- When installing the drain hose to a sink, secure it tightly with string.
- Securing the drain hose correctly will protect the floor from damage due to water leakage.

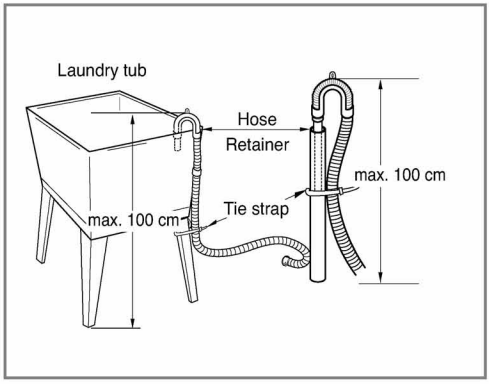

Installation

■ Leveling

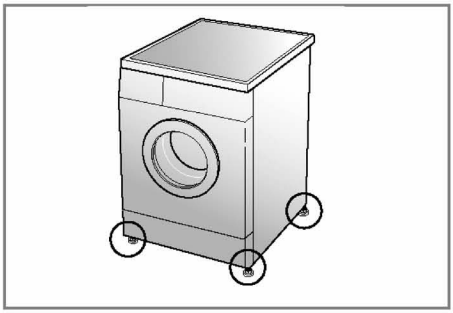

1. Leveling the washing machine properly prevents excessive noise and vibration. Install the appliance on a solid and level floor surface, preferably in a corner of the room.

NOTE

- Timber or suspended type flooring may contribute to excessive vibration and unbalance.

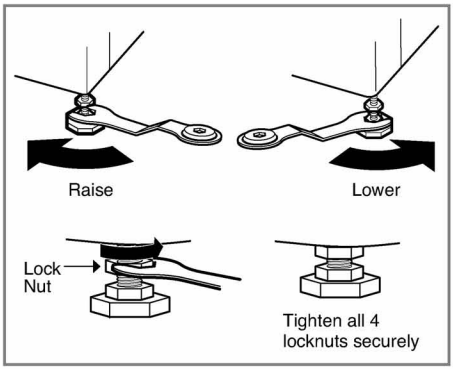

2. If the floor is uneven, turn the adjustable feet as required. (do not insert pieces of wood etc. under the feet)
Make sure that all four feet are stable and resting on the floor and then check that the appliance is perfectly level. (use a spirit level)

- Once the washer is level, tighten the lock nuts up towards the base of the washer. All lock nuts must be tightened.

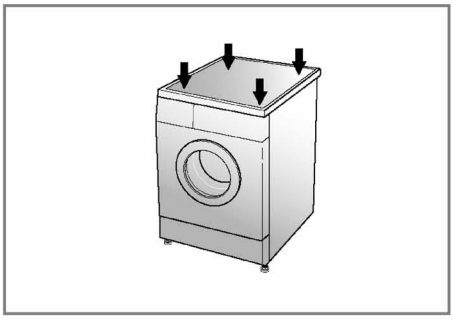

- Diagonal Check
  When pushing down the edges of the washing machine top plate diagonally, the machine should not move up and down at all (Please, check both directions). If machine rocks when pushing the machine top plate diagonally, adjust the feet again.

NOTE

If the washing machine is installed on a raised platform, it must be securely fastened in order to eliminate the risk of falling off.

Installation

▶ Concrete floors

- The installation surface must be clean, dry and level.
- Install washer on a flat hard floor.

▶ Tile floors (Slippery floors)

- Position each foot on the Tread Mate and level the machine to suit. (Cut Tread Mate into 70x70 mm sections and stick the pieces on to the dry tile where machine is to be placed.)
- Tread Mate is a self adhesive material used on ladders & steps that prevents slipping.

▶ Wooden floors (Suspended floors)

- Wooden floors are particularly susceptible to vibration.
- To prevent vibration we recommend you place rubber cups under each foot under washer at least 15mm thick, secured to at least 2 floor beams with screws.

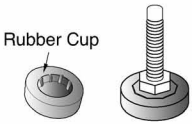

- If possible install the washer in one of the corners of the room, where the floor is more stable.
- Fit the rubber cups to reduce vibration.
- You can obtain the rubber cups (p/no.4620ER4002B) from the LG spares dept.

NOTE

- Proper placement and leveling of the washer will ensure long, regular and reliable operation.
- The washer must be 100% horizontal and stand firmly in position.
- It must not “Seesaw” across corners under load.
- The installation surface must be clean, free from floor wax and other lubricant coatings.
- Do not let the feet of the washer get wet. If feet of the washer get wet, slipping may occur.

How to use washer

■ Operating washing machine



1. Sort Laundry.
(Refer to 18 page)

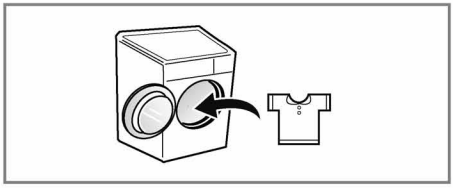

2. Open the door and load laundry.



3. Press the Power button.

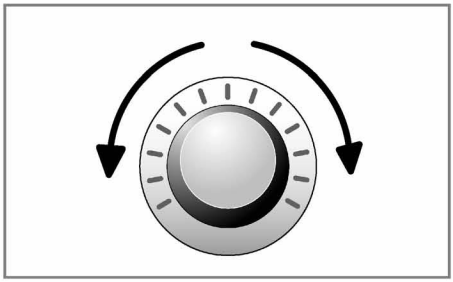

4. Select a Program.
(Refer to 19~21 page)

Select options at this time
(Refer to 23~28 page)
- ■ Additional Program
- ■ Temperature
- ■ Spin Speed
- ■ Other functions

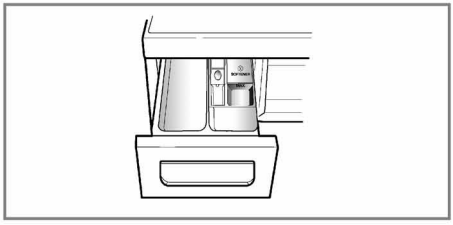

5. Add detergent.
(Refer to 29~30 page)



6. Press the Start/Pause button.

How to use washer

■ Care before washing

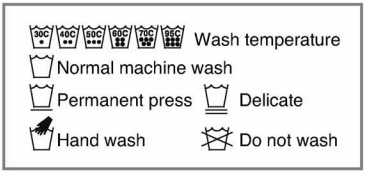

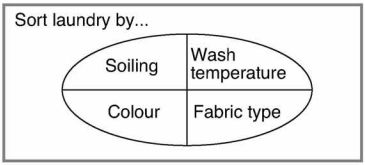

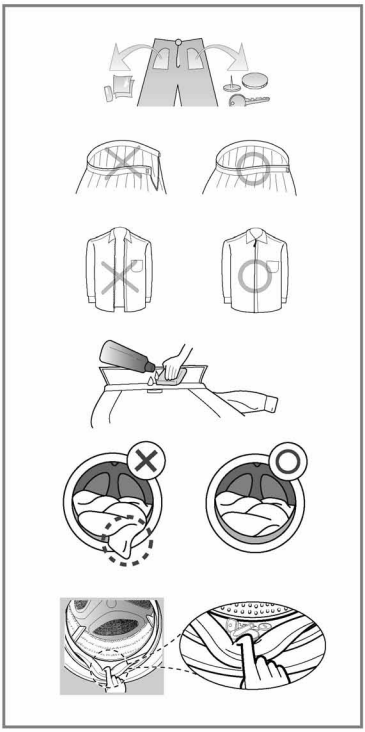

1. Care Labels

Look for a care label on your clothes.
This will tell you about the fabric content of your garment and how it should be washed.

2. Sorting

To get the best results, sort clothes into loads that can be washed with the same wash cycle.
Water temperature and spin speed and different fabrics need to be washed in different ways.
Always sort dark colors from pale colors and whites. Wash separately as dye and lint transfer can occur causing discolouration of white etc. If possible, do not wash heavily soiled items with lightly soiled one.

- Soil (Heavy, Normal, Light)
  Separate clothes according to amount of soil.
- Color (White, Lights, Darks)
  Separate white fabrics from colored fabrics.
- Lint (Lint producers, Collectors)
  Wash lint producers and lint collectors separately.
- Do not use the unite for washing fruit & vegetable

3. Caring before loading

Combine large and small items in a load. Load large items first. Large items should not be more than half the total wash load. Do not wash single items.
This may cause an out-of-balance load. Add one or two similar items.

- Check all pockets to make sure that they are empty. Items such as nails, hair clip, matches, pens, coins and keys can damage both your washer and your clothes.
- Close zippers, hooks and strings to make sure that these items don't snag on other clothes.
- Pre treat dirt and stains by brushing a little detergent dissolved in water onto stains like collars and cuffs to help lift dirt.
- Check the folds of the flexible gasket (gray) and remove any small articles.
- Check inside of the drum and remove any item from a previous wash.
- Remove any clothing or items from the flexible gasket to prevent clothing and gasket damage.

NOTE

- Before the first wash, select a cycle (Cotton 60°C, add a half load of detergent) allow the unit to wash without clothing. This will remove residues and water from the drum that may have been left during manufacturing.

How to use washer

■ Washing program table

• Recommended courses according to the laundry type.

Program	Description	Fabric type	Proper Temp.	Maximum Load
Cotton	Provides better performance by combining various drum motions.	Color fast garments (shirts, nightdresses, pajamas, etc) and lightly soiled white cotton (underwear).	60°C (Cold to 95°C)	Rating
Cotton Eco	Provide optimized washing performance with less energy consumption.		40°C (Cold to 60°C)	
Easy Care	This cycle is suitable for casual shirts that do not need ironing after washing.	Polyamide, Acrylic, Polyester.	40°C (Cold to 60°C)	4.0 kg
Sports Wear	This cycle is suitable for sports wear such as jogging clothes and running wear.	Coolmax, Gore-tex, fleece and Sympatex.	40°C (Cold to 40°C)	2.0 kg
Wool	Enable to wash wool fabrics. (Please use detergent for machinewashable woolens).	Machine washable woolens with pure new wool only.	40°C (Cold to 40°C)	
Quick 30	This cycle provides fast washing time for small loads and lightly soiled clothes.	Colored laundry which is lightly soiled fast.	30°C (Cold to 40°C)	
Rinse+Spin	Use this cycle to prevent fresh stains from setting in fabrics.	Cotton and mix fabrics.	-	Rating
Baby care	Remove solid and protein stain and provide better rinse performance.	Lightly soiled baby wear.	60°C (95°C)	6.0 kg
Intensive 60	This cycle is suitable for heavily soiled clothes and special clothes such as sheet.	Cotton and mix fabrics.	60°C (Cold to 60°C)	4.0 kg

■ Drying Program Table

Program		Fabric type	Maximum Load
Cupboard Dry		Cotton or Linen Fabrics such as cotton towel, t-shirts, linen laundries.	4.0 kg
Iron Dry		Cotton or Linen Fabrics for ready to ironing.	4.0 kg
Low Temp. Dry		Easy Care Textiles, Synthetic Fabrics Suitable for Easy care, Mix programm washable clothes	4.0 kg
Time Dry	30 min.	–	1.0 kg
	60 min.	–	2.0 kg
	90 min.	–	2.5 kg
	120 min.	–	3.0 kg
	150 min.	–	4.0 kg

• Water Temperature: Select water temperature to suit wash cycles.
Always follow garment manufacture's care label or instructions when washing.

NOTE

- Neutral detergent is recommended.
- The wool cycle features gentle tumbling and low-speed spin for garment care.
- Select maximun selectable spin speed of washing programme to ensure the drying result.
- Where the amount of laundry to be washed and dried in one programme does not exceed the maximum weight permitted for the drying programme, washing and drying in one continuous sequence is recommended.

How to use washer

■ Extra options

Program	Dry	Intensive	Pre wash	Medic Rinse	Time Delay
Cotton	●	●	●	●	●
Cotton Eco	●	●	●	●	●
Easy Care	●	●	●	●	●
Sports Wear		●			●
Wool		●			●
Quick 30		●			●
Rinse+Spin	●			●	●
Baby Care	●	●	●	●	●
Intensive 60	●	●*			●

* : This option is automatically included in the cycle and can not be deleted.

■ Operating data

Program	Max RPM	
	[F1496AD(P)2(1~9)]	[F1296AD(P)2(1~9)]
Cotton	1400	1200
Cotton Eco	1400	1200
Easy Care	800	800
Sports Wear	800	800
Wool	800	800
Quick 30	1400	1200
Rinse+Spin	1400	1200
Baby Care	800	800
Intensive 60	1400	1200

How to use washer

■ Control panel

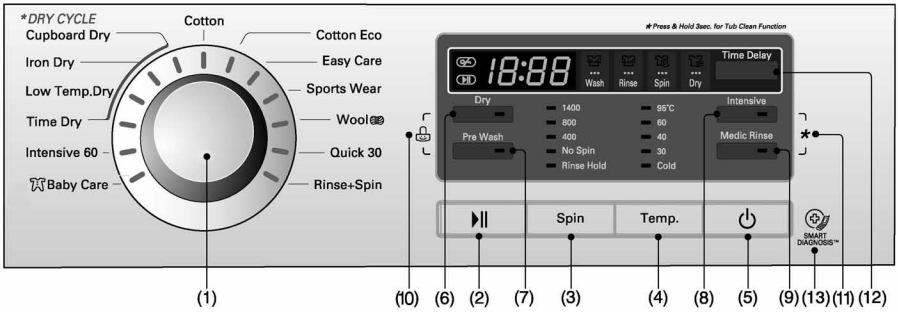

(1) Dial : Program
(2) Button : Start/Pause
(3) Button : Spin
(4) Button : Temperature
(5) Button : Power
(6) Button : Dry
(7) Button : Pre Wash
(8) Button : Intensive
(9) Button : Medic Rinse
(10) Child Lock
(11) Tub Clean
(12) Button : Time Delay
(13) SmartDiagnosis™ function is available only for the products with a SmartDiagnosis™ mark

Power

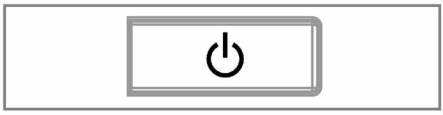

1. Power

- Press the Power button to turn power on and off.
- To cancel the Time Delay function, the power button should be pressed.

2. Initial Program

- When the Power button is pressed, the washer is ready for Cotton program. And the other initial conditions as follows.
- So, if you want to advance into the washing cycle without changing the program, just press the **Start/Pause** button and then the washer will proceed.

■ ***Initial program***

[F1496AD(P)2(1~9)]

- Cotton Program / Main wash / Normal Rinse / 1400 rpm / 60°C

[F1296AD(P)2(1~9)]

- Cotton Program / Main wash / Normal Rinse / 1200 rpm / 60°C

Program

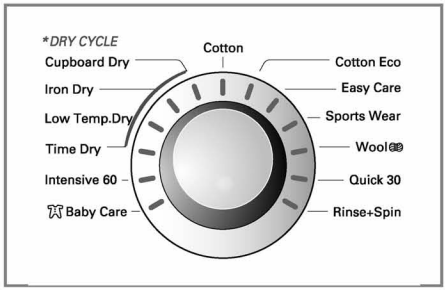

- 13 programs are available according to the laundry type.
- Lamp will light up to indicate selected program.
- When **Start/Pause** button is pressed, the Cotton program is automatically selected.
- By turning the Program dial, the program is selected in order of

" Cotton – Cotton Eco – Easy Care – Sports Wear – Wool – Quick 30 – Rinse+Spin – Baby care – Intensive 60 – Time Dry – Low Temp. Dry – Iron Dry – Cupboard Dry "

Regarding to the laundry type for each program Please refer to the page19.

■ Additional program

Time Delay

You can set a time delay so that the washing machine will start automatically and finish after a specified time interval.

NOTE

- The delay time is the time to the end of the programme, not the start. The actual running time may vary due to water temperature, wash load and other factors.

1. Press the Power button.
2. Select a cycle.
3. Press the Time Delay button and set time required.
4. Press the Start/Pause button.

Medic Rinse

For best results or for cleaner rinsing. This allows the final rinse to be heated to 40 degrees.

1. Press the Power button.
2. Select a cycle.
3. Press the Medic Rinse button and set time required.
4. Press the Start/Pause button.

Intensive

If the laundry is heavily soiled,"Intensive" Course is effective.

1. Press the Power button.
2. Select a cycle.
3. Press the Intensive button.
4. Press the Start/Pause button.

Pre Wash

If the laundry is heavily soiled, "Pre Wash" course is effective.

1. Press the Power button.
2. Select a cycle.
3. Press the Pre Wash button.
4. Press the Start/Pause button.

Dry

Wash+Dry

1. Press the Power button.
2. Select a cycle (Cotton, Cotton Eco, Easy Care, Intensive60,Baby care).
3. Press the Dry button.
4. Press the Start/Pause button.

Time Dry

When you select the Time Dry course, you could press the Dry button to Select dry time.(30',60',90',120',150')

■ Options

Spin

- Spin Speed level can be selected by pressing 'Spin' button repeatedly.

Temp.

- By pressing the Temp. button the water temperature can be selected.
  - Cold
  - 30°C, 40°C, 60°C, 95°C
- Water temperature can be selected according to the program.

■ Other functions

Spin only

1. Press the Power button.
2. Press the Spin button to select RPM.
3. Press the Start/Pause.

NOTE

When you select "No Spin", it will still rotate for a short time with low speed to drain quickly.

■ Child Lock

Select this function to lock the buttons on the control assembly to prevent tampering. "Child Lock" can be set only during the washing cycle.

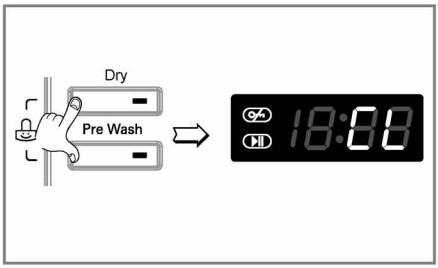

Locking the control panel

1. Press the Dry button and Pre Wash button simultaneously for 3 seconds.
2. A beeper will sound, and ' CL ' will appear on the LED display.
   When the child lock is set, all buttons are locked except the Power button.

NOTE

- Turning off the power will not reset the child lock function. You must deactivate child lock before you can access any other functions.

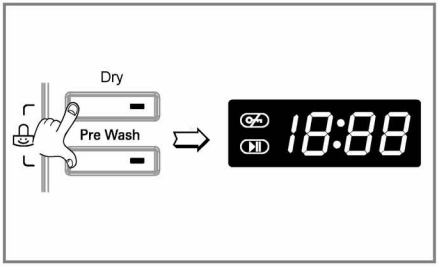

Unlocking the control panel

1. Press the Dry button and Pre Wash button simultaneously for 3 seconds.
2. A beeper will sound and the remaining time for the current programme will reappear on the LED display.

■ Beep On / Off

The Beep on/off function can be set only during the washing cycle.

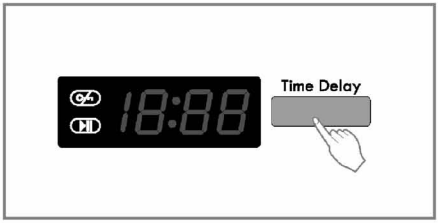

1. Press the Power button.
2. Press the Start/Pause button.
3. Press and hold the Time Delay button for three seconds to set Beep on/off function.

Once the Beep on/off function is set, the setting is memorized even after the power is turned off.

NOTE

- If you want to turn the Beeper off, simply repeat this process.

How to use washer

■ Tub Clean

Tub Clean is a special cycle to clean the inside of the washing machine.
A higher water level is used in this cycle at higher spin speed. Perform this cycle regularly.

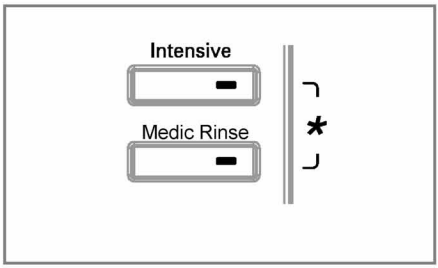

1. Remove any clothing or items from the washer and close the door.
2. Open the dispenser drawer and add Anti limescale(e.g. Calgon) to the main wash compartment.
3. Close the dispenser drawer slowly.
4. Power On and then press and hold **Intensive** and **Medic Rinse** button for 3 seconds.then"tcL" will be displayed on the LED display.
5. Press the Start/Pause button to start.
6. After the cycle is complete, leave the door open to allow the washer door opening, flexible gasket and door glass to dry.

NOTE

- Do not add any detergent to the detergent compartments.
- Excessive suds may generate and leak from the washer.

⚠ CAUTION

- **If there is a child, be careful not to leave the door open for too long.**

■ Door Lock



- **"Door Lock"** - For safety reasons, the door will lock while machine is in use and the "Door Lock" icon will light up. You can safely open the door after the "Door Lock" icon turns off.

How to use washer

■ Dry

- Cold water tap must be left on during drying cycles.

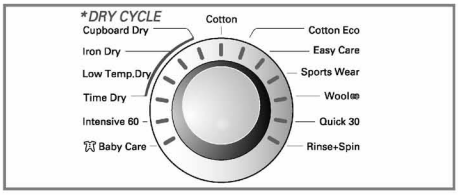

- Dry Cycle: Cupboard Dry, Iron Dry, Low Temp. Dry, Time Dry
- For most even drying, make sure all articles in the clothes load are similar in material and thickness.
- Do not overload dryer by stuffing too many articles into drum. Items must be able to tumble freely
- If you open door and remove load before dryer has finished its cycle, remember to press the Start/Pause button.
- After the end of dry, "Cd" is displayed. By pressing the "Start/Pause" button the program can be ended. If you not press the "Start/Pause" button, the program is ended after about 4 hours. "Cd" Cooling Cycle.

1. Drying Automatic guide

- Use your Automatic Cycles to dry most loads. Electronic sensors measures the temperature of the exhaust to increase or decrease drying temperatures for faster reaction time and tighter temperature control.
- Recommend Automatic drying course as a kind of clothes.

a) Low Temp. Dry : For Synthetics select

b) Iron Dry : If you want to iron clothes

c) Cupboard Dry : For Cottons select

d) Time(30/60/90/120/150 minutes)
- 30 min. : Cotton/Towel 1.0 kg
- 60 min. : Cotton/Towel 2.0 kg
- 90 min. : Cotton/Towel 2.5 kg
- 120 min. : Cotton/Towel 3.0 kg
- 150 min. : Cotton/Towel 4.0kg

NOTE

- The estimated drying time varies from the actual drying time with an Automatic. The type of fabric, size of the load, and the dryness selected affect drying time.
- The last 10 minutes of dryinng time, A sensor(Thermistor) detects clothes drying conditions.
  When the dryness is low, cycle time will be added by max. 10 mins with "10" mins remaining window display.

2. Drying time guide

• These drying times are given as a guide to help you set your dryer for manual drying. Drying times can vary greatly depending on dampness, room temperature and type of fabric and your own experience will be your best guide.

Woolen Articles

- Do not tumble dry woolen articles. Pull them to their original shape and dry them flat.

Woven and Loopknit Materials

- Some woven and loopknit materials may shrinks, by varying amounts, depending on their quality.
- Always stretch them out immediately after drying.

Permanent Press and Synthetics

- Do not overload your dryer
- Take out permanent press articles as soon as the dryer stops to reduce wrinkles.

Fiber or Leather Materials

- Always check the manufacture's instructions.

Baby clothes and Night Gowns

- Always check the manufacture's instructions.

Rubber and Plastics

- Do not dry any items made from or containing rubber or plastics, such as:
  a) aprons, bibs, chair covers
  b) curtains and table cloths
  c) bathmats

Fiber glass

- Do not dry fiberglass articles in your dryer. Glass particles left in the dryer could be picked up by your clothes the next time you use the dryer and irri tate your skin.

3. Completion of Drying

• When drying cycle is completed, "Cd" [Cool Down] is displayed on the Multi display.
• The Cool Down is setting automatically when a drying cycle is complete.
• When you are not remove a loaf of clothes from the dryer as soon as it stops, wrinkles can form.
• The Cool Down operating periodically tumbles, rearranges and fluffs the load to tumbles, rearranges and fluffs the load to hours.
• The "Cd" message will continue to display until the clothes are removed or the Start/Pause button is pressed.

Adding detergent

■ Adding detergent and fabric softener

▶ The dispenser drawer

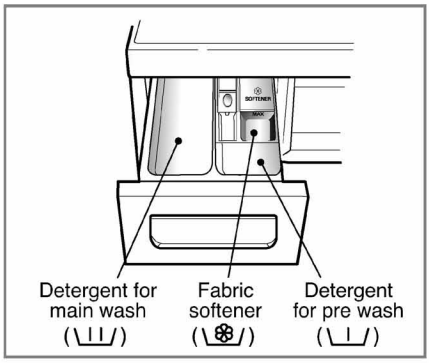

- Main wash only → II
- Pre Wash + Main Wash → I • II

⚠WARNING

- **Keep all washing detergents away from children** as there is danger of poisoning.
- Too much detergent, bleach or softener may cause an overflow.
- Be sure to use the appropriate amount of detergent.

▶ Adding fabric softener

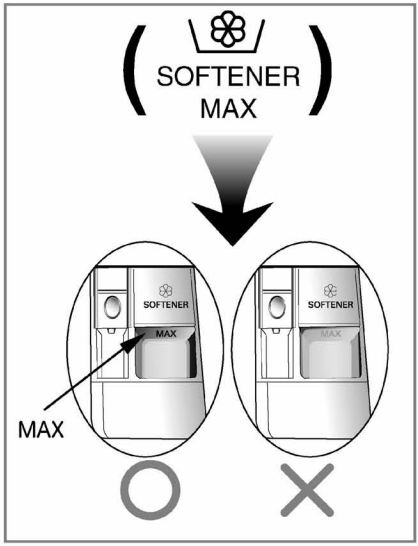

- Do not exceed the maximum fill line. Overfilling can cause early dispensing of the fabric softener which could stain clothes. Close the dispenser drawer slowly.
- Do not leave the fabric softener in the detergent drawer for more than 2 days. (Fabric softener could be harden)
- Softener will automatically be added during the last rinse cycle.
- Do not open the drawer when water is supplied.
- Solvents(benzene, etc) should not be used.

NOTE

- Do not pour fabric softener directly on the clothes.

Adding detergent

▶ Detergent dosage

- Detergent should be used according to the instruction of the detergent manufacture.
- If too much detergent is used, too many suds can occur and this will decrease the washing result or cause heavy load to the motor.
- It is recommended that you use powdered detergent for best results.
- If you wish to use liquid detergent follow guidelines provided by the detergent manufacturer.
- You can pour liquid detergent directly into the main detergent drawer if you are starting the cycle immediately.
- Please do not use liquid detergent if you are using 'Time Delay ' as the liquid may harden, or if you have selected 'Pre Wash'.
- If too many suds occur, please reduce the detergent amount.
- Detergent usage may need to be adjusted for water temperature, water hardness, size and soil level of the load. For best results, avoid oversudsing.

⚠ WARNING

- **Do not let the detergent harden.**
  Doing so may lead to blockages, poor rinse performance or bad odor.

NOTE

- Full load : according to manufacturer's recommendation.
- Part load : 3/4 of the normal amount.
- Minimum load : 1/2 of full load.

- Detergent is flushed from the dispenser at the beginning of the cycle.

▶ Adding water softener

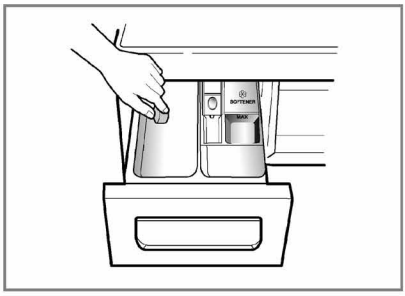

- A water softener, such as Anti-limescale (e.g. Calgon) can be used to cut down on the use of detergent in extremely hard water areas. Dispense according to the amount specified on the packaging. First add detergent and then the water softener.
- Use the quantity of detergent as for soft water.

▶ Using tablet

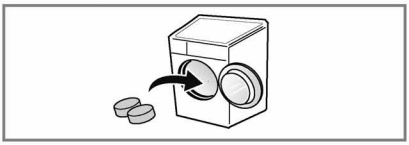

1. Open the door and put tablets into the drum.

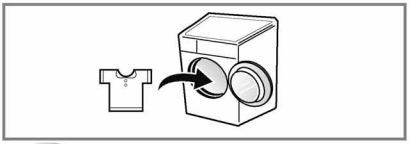

2. Load the laundry into the drum and close the door.

Maintenance

- Before cleaning the washer interior, unplug the electrical power cord to avoid electrical shock hazards.
- Turn off the stopcock if the machine is to be left for any length of time (e.g. holiday), especially if there is no floor drain(gully) in the immediate vicinity.

■ The water inlet filter

- " IE " icon will be displayed on the control panel when water does not enter the detergent drawer.
- If water is very hard or contains traces of lime deposit, the water inlet filter may become clogged.

  It is therefore a good idea to clean it from time to time.

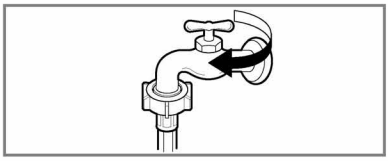

1. Turn off the water tap.

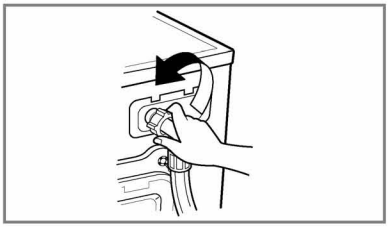

2. Unscrew the water inlet hose.

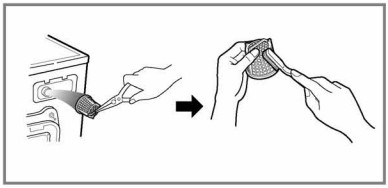

3. Clean the filter using a hard bristle brush.

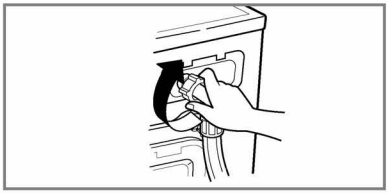

4. Tighten up the inlet hose.

Maintenance

■ The drain pump filter

• The drain filter collects threads and small objects left in the laundry.
Check regularly that the filter is clean to ensure smooth running of your machine.

⚠ CAUTION

• First drain using the drain hose and then open the pump filter to remove any threads or objects.
Be careful when draining if the water is hot.

• Allow the water to cool down before cleaning the drain pump, carrying out emergency emptying or opening the door in an emergency.

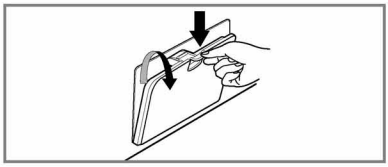

1. Open the lower cover cap.
pull out the hose.

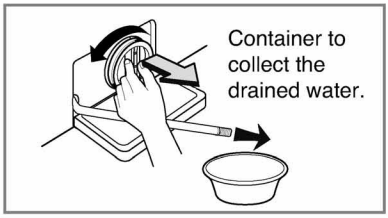

2. Unplug the drain plug.
Open the filter by turning to the left.

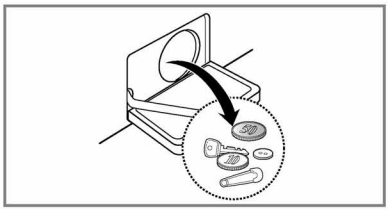

3. Remove any extraneous matter from the pump filter.

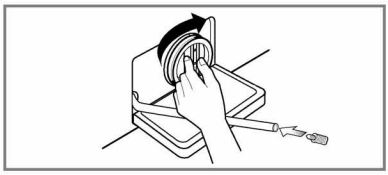

4. After cleaning, turn the pump filter and insert the drain plug.

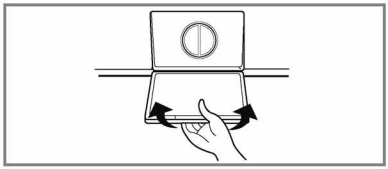

5. Close the lower cover cap.

Maintenance

■ Dispenser drawer

- After a while, detergents and fabric softeners leave a deposit in the drawer.
- It should be cleaned from time to time with a jet of running water.
- If necessary it can be removed completely from the machine by pressing the catch downwards and by pulling it out.
- To facilitate cleaning, the upper part of the fabric softener compartment can be removed.

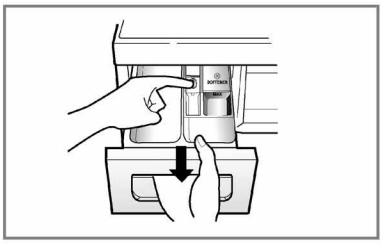

1. Pull out the dispenser drawer.

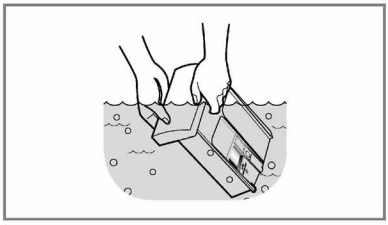

2. Clean the dispenser drawer under water.

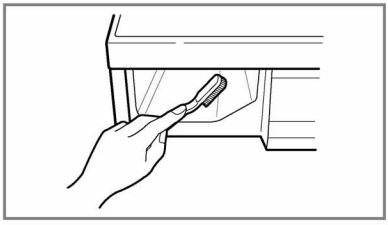

3. Clean inside the recess with an old toothbrush.

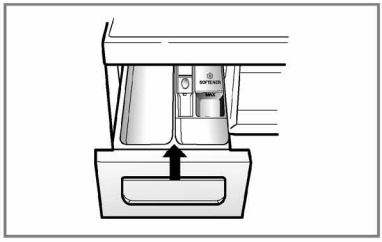

4. Insert the dispenser drawer.

Maintenance

■ The washing drum

- If you live in a hard water area, limescale may build up continuously in places where it cannot be seen and thus not easily removed. Over time the build up of scale clogs appliances, and if it is not kept in check these may have to be replaced.
- Although the washing drum is made of Stainless steel, specks of rust can be caused by small metal articles (paper clips, safety pins) which have been left in the drum.
- The washing drum should be cleaned from time to time.
- If you use descaling agents, dyes or bleaches, make sure they are suitable for washing machine use.
- Descaler may contain chemicals that may damage part of your washing machine.
- Remove any spots with a stainless steel cleaning agent.
- Never use steel wool.

■ Cleaning your washer

▶ Exterior

- Proper care of your washer can extend its life.
- The outside of the machine can be cleaned with warm water and a neutral non abrasive household detergent.
- Immediately wipe off any spills. Wipe with damp cloth.
- Try not to hit surface with sharp objects.
- Do not use methylated spirits, diluents or similar products.

▶ Interior

- Dry around the washer door opening, flexible gasket and door glass.
- Run washer through a complete cycle using hot water.
- Repeat process if necessary.

NOTE

- To remove hard water deposits, use only cleaners labelled washer safe.

■ Cold conditions

If the washer is stored in an area where freezing may occur or moved in freezing temperatures, follow these instructions to prevent damage to the washer:

- Turn off water supply tap.
- Disconnect hoses from water supply and drain water from hoses.
- Plug electrical cord into a properly grounded electrical outlet.
- Add 1gallon (3.8L) of nontoxic recreational vehicle(RV) antifreeze into an empty wash drum. Close the door.
- Set spin cycle and let washer spin for 1minute to drain out all water. Not all of the RV antifreeze will be expelled.
- Unplug electrical power cord, dry the drum interior, and close the door.
- Remove dispenser drawer, drain and dry excess water from the compartments.
- Store washer in an upright position.
- To remove antifreeze from washer after storage, run empty washer through a complete cycle using detergent. Do not add wash load.

Troubleshooting guide

• This washing machine is equipped with automatic safety functions which detect and diagnose faults at an early stage and react appropriately.
When the machine does not function properly or does not function at all, check the following points before you contact your service provider.

■ Diagnosing Problem

Symptom	Possible Cause	Solution
Rattling and clanking noise	• Foreign objects such as coins or safety pins maybe in drum or pump.	Stop washer, check drum and drain filter. If noise continues after washer is restarted, call your authorised service centre.
Thumping sound	• Heavy wash loads may produce a thumping sound. This is usually normal.	If sound continues, washer is probably out of balance. Stop and redistribute wash load.
Vibrating noise	• Have all the transit bolts and packing been removed? • Are all the feet resting firmly on the ground?	If not removed during installation, refer to Installation guide for removing transit bolts. Wash load may be unevenly distributed in drum. Stop washer and rearrange wash load.
Water leaks.	• Fill hoses or drain hose are loose at tap or washer.	Check and tighten hose connections.
	• House drain pipes are clogged.	Unclog drain pipe. Contact plumber if necessary.
Oversudsing		Too much detergent or unsuitable detergent may cause excessive foaming which may result in water leaks.
Water does not enter washer or it enters slowly	• Water supply is not adequate in area.	Check another tap in the house.
	• Water supply tap is not completely open.	Fully open tap.
	• Water inlet hose(s) are kinked.	Straighten hose.
	• The filter of the inlet hose(s) clogged.	Check the filter of the inlet hose.
Water in the washer does not drain or drains slowly.	• Drain hose is kinked or clogged.	Clean and straighten the drain hose.
	• The drain filter is clogged.	Clean the drain filter

Troubleshooting guide

Symptom	Possible Cause	Solution
Washer does not start	• Electrical power cord may not be plugged in or connection may be loose.	Make sure plug fits tightly in wall outlet.
	• House fuse blown, circuit breaker tripped,or a power outage has occurred.	Reset circuit breaker or replace fuse. Do not increase fuse capacity. If problem is a circuit overload, have it corrected by a qualified electrician.
	• Water supply tap is not turned on.	Turn on water supply tap.
Washer will not spin	• Check that the door is firmly shut.	Close the door and press the Start/Pause button. After pressing the Start/Pause button, it may take a few moments before the washer begins to spin. The door must be locked before spin can be achieved. Add 1 or 2 similar items to help balance the load. Rearrange load to allow proper spinning.
Door does not open		Once machine has started, the door cannot be opened for safety reasons. Check if the "Door Lock" icon is illuminated. You can safely open the door after the "Door Lock" icon turns off.
Wash cycle time delayed		The washing time may vary by the amount of laundry, water pressure, water temperature and other usage conditions. If an imbalance is detected or if the suds removing programme is on, the wash time shall be increased.
Fabric softener overflow	Too much softener may cause an overflow.	Follow softener guidelines to ensure appropriate amount is used. Do not exceed the maximum fill line
Softeners dispensed too early		Close the dispenser drawer slowly. Do not open the drawer during the wash cycle.
Dry problem	• Does not dry	Do not overload. Check that the washer is draining properly to extract adequate water from the load. Clothes load is too small to tumble property. Add a few towels.

Troubleshooting guide

■ Error Messages

Symptom	Possible Cause	Solution
1E	• Water supply is not adequate in area. • Water supply taps are not completely open. • Water inlet hose(s) are kinked. • The filter of the inlet hose(s) are clogged.	Check another tap in the house. Fully open tap. Straighten hose(s). Check the filter of the inlet hose.
OE	• Drain hose is kinked or clogged. • The drain filter is clogged.	Clean and straighten the drain hose. Clean the drain filter.
UE	• Load is too small. • Load is out of balance. • The appliance has an imbalance detection and correction system. If individual heavy articles are loaded (ex. bath mat, bath robe, etc.) this system may stop spinning or even interrupt the spin cycle altogether. • If the laundry is still too wet at the end of the cycle, add smaller articles of laundry to balance the load and repeat the spin cycle.	Add 1 or 2 similar items to help balance the load. Rearrange load to allow proper spinning.
dE	 • Ensure door is not open.	Close the door completely. * If "dE" is not released, call for service.
tE		Unplug the power plug and call for service.
FE	• Water overfills due to the faulty water valve.	Close the water tap. Unplug the power plug. Call for service.
PE	• Water level sensor has malfunctioned.	
LE		Allow the washer to stand for 30minutes to allow the motor cool; then restart the cycle.
dHE	• Dry heater or thermostat trouble.	Call for service.

Troubleshooting guide

NOTE

- SMARTDIAGNOSIS™ function is available only for the products with a SMARTDIAGNOSIS™ mark. In case of a mobile phone with static option, the SMARTDIAGNOSIS™ function might not operate.

■ Using SMARTDIAGNOSIS™

- Only use this feature when instructed to do so by the call center.
  The transmission sounds similar to a fax machine, and so has no meaning except to the call center.
- SMARTDIAGNOSIS™ cannot be activated if the washer does not power up.
  If this happens, then troubleshooting must be done without SMARTDIAGNOSIS™.

If you experience problems with your washer, call to Customer Information Center.
Follow the call center agent's instructions, and do the following steps when requested:

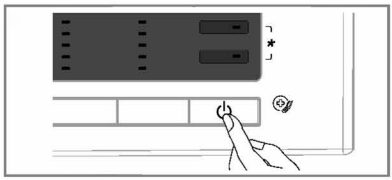

1. Press the Power button to turn on the washer. Do not press any other buttons or turn the cycle selector knob.

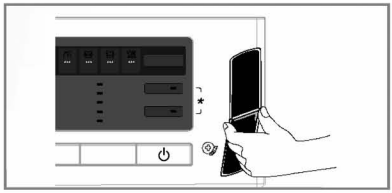

2. When instructed to do so by the call center, place the mouthpiece of your phone very close to the Power button.

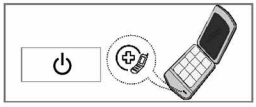

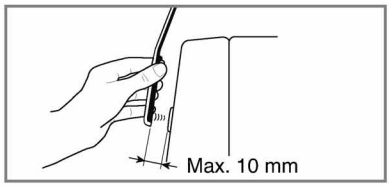

3. Press and hold the “Temp.” button for three seconds, while holding the phone mouthpiece to the icon or Power button.

4. Keep the phone in place until the tone transmission has finished.
This takes about 17 seconds, and the display will count down the time.
- For best results, do not move the phone while the tones are being transmitted.
- If the call center agent is not able to get an accurate recording of the data, you may be asked to try again.
- Pressing the Power button during the transmission will shut off the SMARTDIAGNOSIS™.

5. Once the countdown is over and the tones have stopped, resume your conversation with the call center agent, who will then be able to assist you using the information transmitted for analysis at the call to Customer information center.

Terms of Warranty

Disposal of your old appliance

WEEE
(India only)

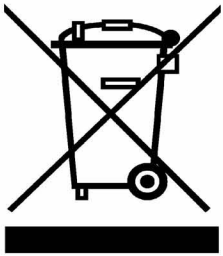

1. All electrical and electronic products should be disposed of separately from the municipal waste stream via designated collection facilities appointed by the government or the local authorities.
2. The correct disposal of your old appliance will help prevent potential negative consequences for the environment and human health.
3. To locate a nearest collection centre or call for pick-up (limited area only) for disposal of this appliance, please contact Toll Free No. 1800-180-9999 for details. All collection centre and pick up facilities are done by third parties with LG Electronics India Pvt. Ltd. Merely as a facilitator. For more detailed information , please visit : http://www.lg.com/in.

NOTE

- When disposing of the appliance, cut off the mains cable, destroy the plug and disable the door lock to prevent children being trapped inside.

What Is Not Covered:

- Service trips to your home to teach you how to use the product.
- If the product is connected to any voltage other than that shown on the rating plate.
- If the fault is caused by accident, neglect, misuse or Act of God.
- If the fault is caused by factors other than normal domestic use or use in accordance with the owner's manual.
- Provide instruction on use of product or change the set-up of the product.
- If the fault is caused by pests for example, rats or cockroaches, etc.
- Noise or vibration that is considered normal, for example water drain sound, spin sound, or warning beeps.
- Correcting the installation. For example, levelling the product, adjustment of drain.
- Normal maintenance which is recommended by the owner's manual.
- Removal of foreign objects / substances from the machine, including the pump and inlet hose filter, For example, grit, nails, bra wires, buttons etc.
- Replace fuses in or correct house wiring or correct house plumbing.
- Correction of unauthorized repairs.
- Incidental or consequential damage to personal property caused by possible defects with this appliance.
- If this product is used for commercial purpose, it is not warranted.
  (Example : Public places such as public bathroom, lodging house, training center, dormitory)

If the product is installed outside the normal service area, any cost of transportation involved in the repair of the product, or the replacement of a defective part, shall be borne by the owner.


LG
Life's Good