ENGLISH

SIMPLE MANUAL

DVD Home Theater System

Please read this manual carefully before operating your set and retain it for future reference.
To view the instructions of advanced features,
visit http://www.lg.com and then download Owner's Manual.
Some of the content in this manual may differ from your unit.

MODEL

LHD70C

MFL71887603
2211_Rev01

www.lg.com

Copyright © 2022 LG Electronics Inc. All Rights Reserved.



Front Panel

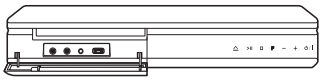

MIC 1/2 ····· Connect a microphone.
PORT. IN ····· Connect to a Portable device.
USB Port ····· Connect a USB device.
⏏ ····· Disc Tray Open / Close
▶II ····· Starts / Pauses playback.
□ ····· Stops playback.
F ····· Changes the input source or function.
- / **+** ····· Adjusts volume.
⏻ / I ····· Power On / Off

Rear Panel

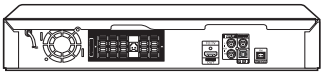

SPEAKERS ····· Connect to speakers.
HDMI OUT TO TV ····· Connect to TV.
AUX (L/R) INPUT ····· Connect to analogue device.
VIDEO OUT ····· Connect to TV.
OPTICAL IN ····· Connect to digital device.
ANTENNA FM ····· Connect to radio antenna.

! Make sure to properly align and connect the optical cable; improper alignment may cause damage to the jack.

1 Speaker Assembling

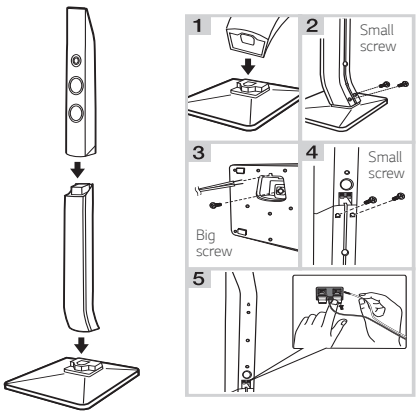

2 Speaker Connection

! Speaker design and connection method may be different according to models.

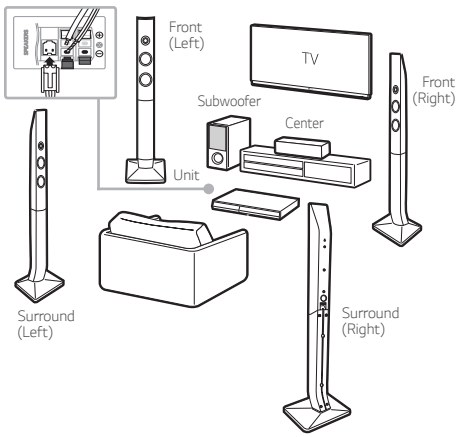

3 TV Connection

HDMI & Optical Connection

1. Connect the Unit to the TV using HDMI & Optical cable.
2. Set the input selector to HDMI on the TV.
3. Set up [External Speaker (Optical)] on your TV setting menu.
4. Follow the instructions on the TV screen using remote control.

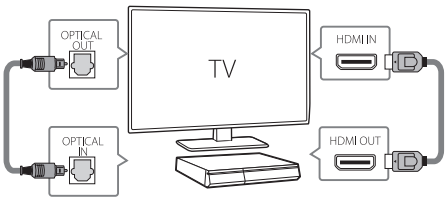

4 Home Menu

Home menu appears on the TV screen. Enjoy various functions on the unit.



For more information, download the online owner's manual. http://www.lg.com

Additional Information

Specification

Power requirements	Refer to main label.
Power consumption	Refer to main label.
Dimensions (W x H x D)	Approx. 360 mm x 58 mm x 298.5 mm
Bus Power Supply (USB)	5 V ⎓ 500 mA
Amplifier (Total RMS output power)	1,000 W RMS

Design and specifications are subject to change without notice.

Replacement of battery

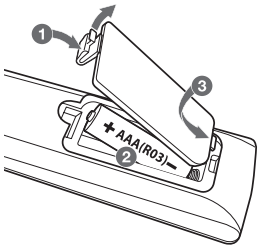

IMPORTANT SAFETY NOTICE

The cord grip for the plug fitted to this product is built into the existing power cord as supplied. If, for any reason you need to shorten the cord.

DO NOT RE-USE THE PLUG.

A new plug must be used to ensure your continued safety by securing the plug to the power cord in accordance with Plug & Socket Regulations 1994.

HDMI™
HIGH-DEFINITION MULTIMEDIA INTERFACE



SAFETY PRECAUTION

THIS EQUIPMENT MUST BE DISCONNECTED FROM THE MAINS POWER SUPPLY WHEN IT IS NOT IN USE. DO NOT ALLOW THIS UNIT TO BE EXPOSED TO RAIN OR MOISTURE.

CAUTION

TO PREVENT ELECTRIC SHOCK, DO NOT REMOVE THE COVER. NO USER SERVICEABLE PARTS ARE INSIDE. REFER SERVICING TO QUALIFIED PERSONNEL.

PRECAUTIONS

Please read these precautions before you operate this unit.

- Avoid extreme heat, cold, moisture and dust.
- Avoid using near a magnetic field. (This will adversely affect the units performance.)
- Be careful when the surface of the case is wiped with a volatile agent such as benzene, alcohol, thinner, etc. or a chemically processed cloth, the surface finish may deteriorate or its coating may peel.
- Use the unit only in a horizontal position, and do not place anything heavy on it.
- Keep the unit away from flower vases, tubs, sinks, etc. If any liquids should spill into unit, serious damage could occur. In that case, please consult qualified service personnel.
- Do not obstruct the ventilation holes: they prevent overheating. Even soft materials such as paper and cloth may prevent proper ventilation of the unit.
- **There are no serviceable parts inside. For service, please contact your service centre.**