SIMPLE MANUAL

Portable Bluetooth Speaker

XT7S

COV37659376

www.lg.com

Copyright © 2025 LG Electronics Inc.
All Rights Reserved.

2501_Rev01

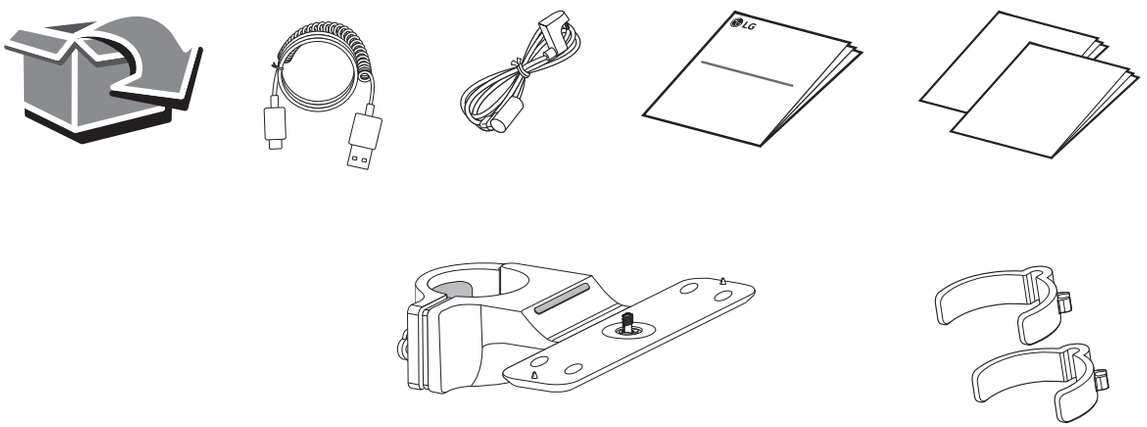

Download Manual

<Android> <iOS> Download App

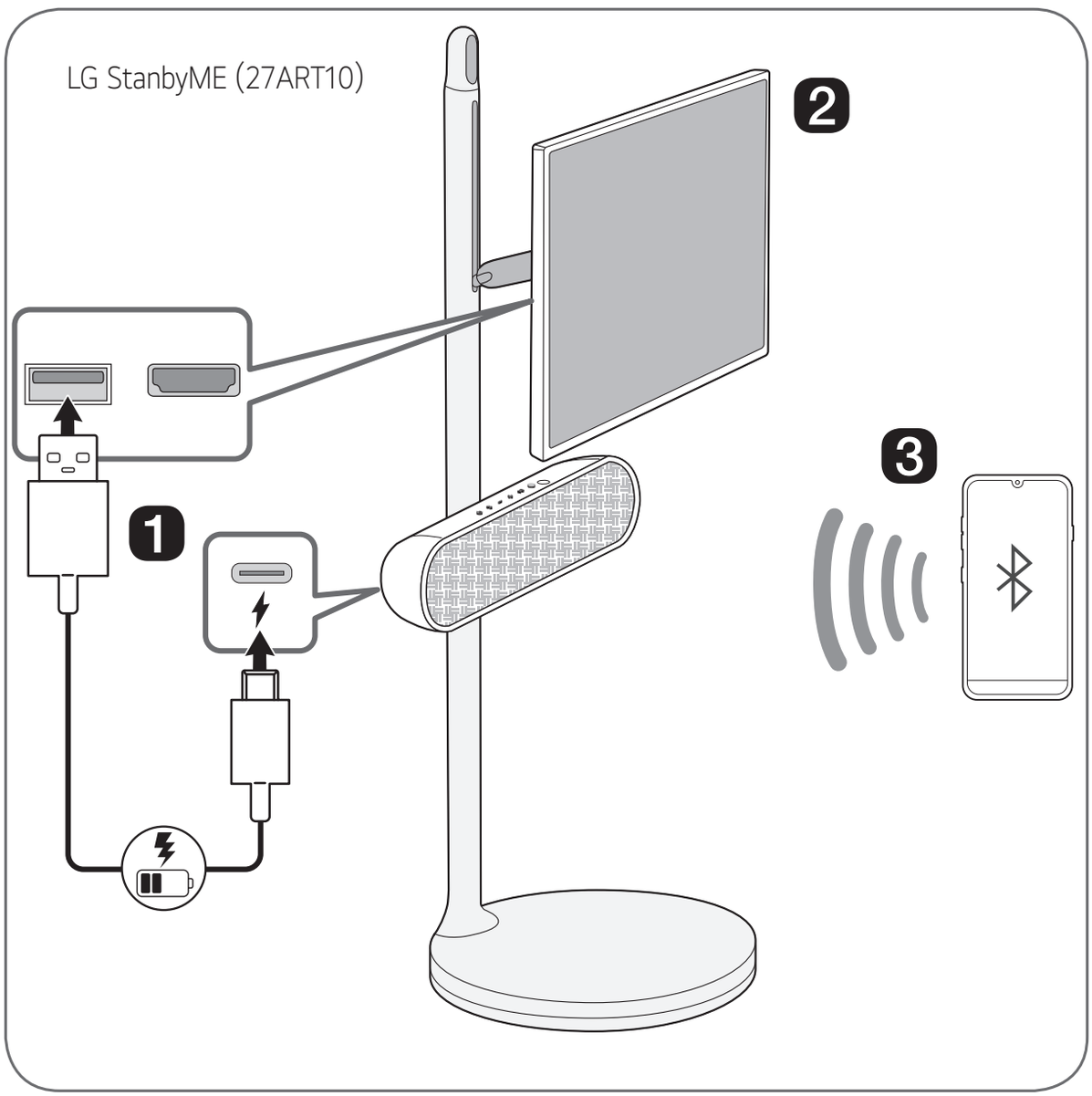
LG StanbyME (27ART10)
1
2
3

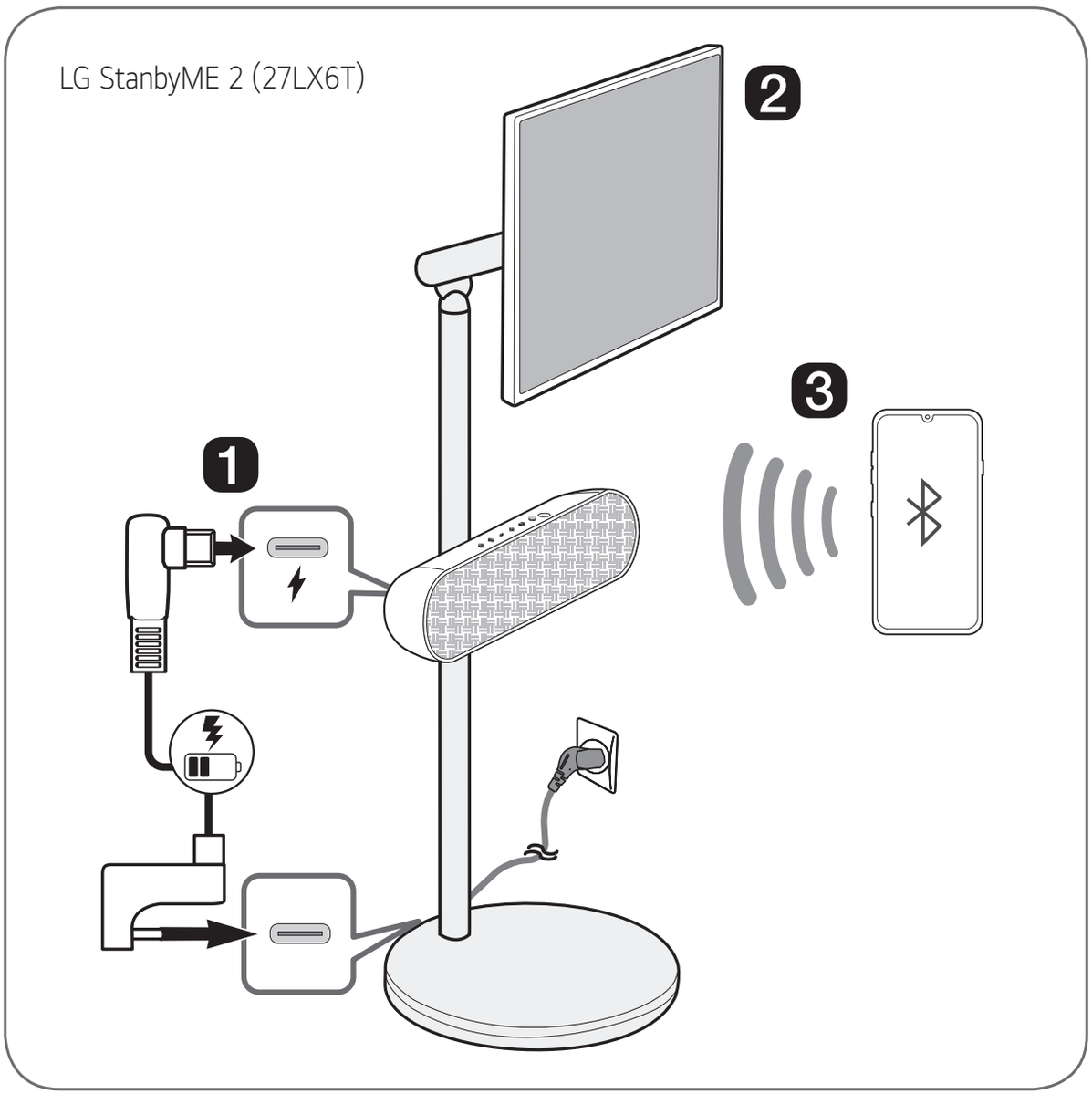
LG StanbyME 2 (27LX6T)
1
2
3

ENGLISH

Connecting and Using the Speaker

❶ Charge the speaker before using it by opening the rear cover and connect the speaker to the USB port on the StanbyME by the USB cable.

ⓘ You can charge the speaker without the StanbyME by using your own AC adapter for charging.

- **LG StanbyME (27ART10)**

ⓘ The speaker can be charged while the StanbyME is on.

ⓘ If the speaker is connected to the StanbyME and powered by the battery, the usage time of the StanbyME may be shortened. For continuous use, connect the power to the StanbyME.

ⓘ When connecting the speaker to the StanbyME, position the StanbyME monitor horizontally.

- **LG StanbyME 2 (27LX6T)**

ⓘ To charge the speaker, you must connect the StanbyME 2 to a power source.

❷ Connect the speaker to the StanbyME via Bluetooth

- **Connect automatically (Initial connection)**

① Turn on the StanbyME.

② Press the **Power** ⏻ button on the speaker to turn it on.

③ The StanbyME finds and connects to this speaker so you can hear the StanbyME sound.

- **Connect manually**

① Press the **Power** ⏻ button on the speaker to turn it on. **Bluetooth** LED blinks. If the LED is not blinking press **Bluetooth** ᛒ button.

② Press ⚙ → 🔊 (Sound Out) on the StanbyME and select [**Bluetooth** device] or [**Bluetooth** device+Internal speaker] and then [Device list].

– If you choose [**Bluetooth** device], find and select "LG XT7S(XX)" on the Connectable Devices list.

– If you choose [**Bluetooth** device+Internal speaker], select [Connect One Speaker]. Then find and select "LG XT7S(XX)" on the Connectable Devices list.

③ Once the StanbyME is connected via **Bluetooth**, the **Bluetooth** LED will turn on and you can hear the StanbyME sound through the speaker.

3 Connect the speaker to a smartphone via Bluetooth

① Turn off the StanbyME. Press the **Power** ⏻ button on the speaker to turn it on. **Bluetooth** LED blinks. If the LED is not blinking press **Bluetooth** ᛒ button.

② Tab the **Settings** ⚙ button on the smartphone and select **Bluetooth**. Turn on the **Bluetooth** function. (**Off** ○ > **On** ●)

③ Find "**LG XT7S**(XX)" on the device list on the smartphone and connect to it. Once the smartphone is connected via **Bluetooth**, the **Bluetooth** LED will turn on.

④ On the smartphone, play a music of your choice.

! When you restart the speaker and if it connects to a device other than the StanbyME, the speaker will wait for **Bluetooth** connection for 30 seconds to easily connect with the StanbyME.

4 Connecting the LG XBOOM App

① Find **LG XBOOM app** on the Google Play or App Store and install it on your smartphone.

② Run the **LG XBOOM app** and use more features. (EQ, Lighting, Sleep Timer, Setting etc.)

- Design and specifications are subject to change without notice.
- For more information, download the online owner's manual. http://www.lg.com

ENGLISH

Specification

Power Supply:
- 5 V ⎓ 1.2 A (AC Adapter)
- Built-in rechargeable battery

Power consumption
- Refer to the main label.

Dimensions (W x H x D):
Approx. 326.0 mm x 78.0 mm x 87.0 mm

Operating Temperature: 5 °C to 35 °C

Operating Humidity: 5 % to 80 %

Ingress Protection: IPX5
– Protected against low pressure jets of water from all directions.

Battery life: Approx. 16 hours
– The listed time may differ depending on usage conditions and playing music sources.

Safety Information

CAUTION: TO REDUCE THE RISK OF ELECTRIC SHOCK DO NOT REMOVE COVER (OR BACK) NO USER-SERVICEABLE PARTS INSIDE REFER SERVICING TO QUALIFIED SERVICE PERSONNEL.



This lightning flash with arrowhead symbol within an equilateral triangle is intended to alert the user to the presence of uninsulated dangerous voltage within the product's enclosure that may be of sufficient magnitude to constitute a risk of electric shock to persons.



The exclamation point within an equilateral triangle is intended to alert the user to the presence of important operating and maintenance (servicing) instructions in the literature accompanying the product.

WARNING:

- TO PREVENT FIRE OR ELECTRIC SHOCK HAZARD, DO NOT EXPOSE THIS PRODUCT TO RAIN OR MOISTURE.
- Do not install this equipment in a confined space such as a book case or similar unit.
- This unit contains magnets which can be harmful to certain kinds of objects (Ex: Magnetic card, Pacemaker etc..).

CAUTION:

- Do not block any ventilation openings. Install in accordance with the manufacturer's instructions. Slots and openings in the cabinet are provided for ventilation and to ensure reliable operation of the product and to protect it from over heating. The openings should never be blocked by placing the product on a bed, sofa, rug or other similar surface. This product shall not be placed in a built-in installation such as a bookcase or rack unless proper ventilation is provided or the manufacturer's instruction has been adhered to.
- The apparatus should not be exposed to water (dripping or splashing) and no objects filled with liquids, such as vases, should be placed on the apparatus.
- No naked flame sources, such as lighted candles, should be placed on the apparatus.
- It is recommended that you use the 5 V AC adapter (more than 1.2 A) with this device. If you do not use the recommended adapter, charging is unavailable or charging time may differ.
- To avoid fire or electric shock, do not open the unit. contact a qualified personnel only.
- Do not leave the unit in a place near the heating appliances or subject to direct sunlight, moisture, or mechanical shock.
- Install this apparatus in a location where the power plug can be easily unplugged and plugged in. If there is a fire or problem with this apparatus, unplug it quickly.
- To clean the unit, use a soft, dry cloth. If the surfaces are extremely dirty, use a soft cloth lightly moistened with a mild detergent solution. Do not use strong solvents such as alcohol, benzine, or thinner, as these might damage the surface of the unit.
- Do not use volatile liquids such as insecticide spray near the unit. Wiping with strong pressure may damage the surface. Do not leave rubber or plastic

products in contact with the unit for a long period of time.
- Do not place the unit over the vehicle's air bag. When the air bag deploys, it may result in injury. Before using in the car, fix the unit.
- Do not use the handsfree function during driving a car.
- Do not leave the unit on an unstable place such as high shelves. it may fall down because of the vibration of the sound.
- Do not use high voltage products around this product. (ex. Electrical swatter) This product may malfunction due to electrical shock.

CAUTION when using this product in environments of low humidity.

- It may cause static electricity in environments of low humidity.
- To prevent static electricity, it is recommended to touch metal objects before using this product.

NOTICE: For safety marking information including product identification and supply ratings, please refer to the main label on the bottom or the other surface of the product.

Symbols

~	Refers to alternating current (AC).
⎓	Refers to direct current (DC).
⧈	Refers to class II equipment.
⏻	Refers to stand-by.
|	Refers to "ON" (power).
⚡	Refers to dangerous voltage.

For models using a built-in battery
Do not store or transport at pressures lower than 11.6 kPa and at above 15,000 m altitude.

- replacement of a battery with an incorrect type that can defeat a safeguard (for example, in the case of some lithium battery types). must be replaced with the same type battery by expert;
- disposal of a battery into fire or a hot oven, or mechanically crushing or cutting of a battery, that can result in an explosion;
- leaving a battery in an extremely high temperature surrounding environment that can result in an explosion or the leakage of flammable liquid or gas;
- a battery subjected to extremely low air pressure that may result in an explosion or the leakage of flammable liquid or gas.

For models using a battery
This device is equipped with a portable battery or accumulator.

CAUTION: Risk of fire or explosion if the battery is replaced by an incorrect type.

- The appliance is not intended for use by young children or infirm persons without supervision.
- Young Children should be supervised to ensure that they do not play with appliance.
- If the appliance is supplied from a cord extension set or an electrical portable outlet device, the cord extension set on electrical portable outlet device must be positioned so that it is not subject to splashing (of water or any form of liquid) or ingress of moisture.

R-NZ



XT7S.AAUSLLC_SIMPLE_COV37659376.indd 11 2025-06-26 8:50:47



T7S.AAUSLLC_SIMPLE_COV37659376.indd 12 2025-06-26 8:50:47