OWNER'S MANUAL

SET-TOP BOX

Please read this manual carefully before operating your set and retain it for future reference.

STB-6500-UA STB-6500-UB

www.lg.com

MFL71727902251 1REV08

Copyright © 2021 LG Electronics Inc.
All Rights Reserved.

Printed in Korea

Important Safety Instruction

ENGLISH

- Read these instructions.
- Keep these instructions.
- Heed all warnings.
- Follow all instructions.
- Do not use this apparatus near water.
- Clean only with dry cloth.
- Do not block any ventilation openings. Install in accordance with the manufacturer's instructions.
- Do not install near any heat sources such as radiators, heat registers, stoves, or other apparatus (including amplifiers) that produce heat.
- Do not defeat the safety purpose of the polarized or grounding-type plug. A polarized plug has two blades with one wider than the other. A grounding type plug has two blades and a third grounding prong. The wide blade or the third prong are provided for your safety. If the provided plug does not fit into your outlet, consult an electrician for replacement of the obsolete outlet.
- Protect the power cord from being walked on or pinched particularly at plugs, convenience receptacles, and the point where they exit from the apparatus.
- Only use attachments/accessories specified by the manufacturer.
- Use only with the cart, stand, tripod, bracket, or table specified by the manufacturer, or sold with the apparatus. When a cart is used, use caution when moving the cart/apparatus combination to avoid injury from tip-over.

- Unplug this apparatus during lightning storms or when unused for long periods of time.
- Refer all servicing to qualified service personnel. Servicing is required when the apparatus has been damaged in any way, such as power-supply cord or plug is damaged, liquid has been spilled or objects have fallen into the apparatus, the apparatus has been exposed to rain or moisture, does not operate normally, or has been dropped.

Warning! Safety instructions

CAUTION

RISK OF ELECTRIC SHOCK
DO NOT OPEN

CAUTION: TO REDUCE THE RISK OF ELECTRIC SHOCK DO NOT REMOVE COVER (OR BACK).
NO USER SERVICEABLE PARTS INSIDE. REFER TO QUALIFIED SERVICE PERSONNEL.

The symbol is intended to alert the user to the presence of uninsulated dangerous voltage within the product's enclosure that may be of sufficient magnitude to constitute a risk of electric shock to persons.

The symbol is intended to alert the user to the presence of important operating and maintenance (servicing) instructions in the literature accompanying the device.

WARNING: TO REDUCE THE RISK OF FIRE AND ELECTRIC SHOCK, DO NOT EXPOSE THIS PRODUCT TO RAIN OR MOISTURE.

- TO PREVENT THE SPREAD OF FIRE, KEEP CANDLES OR OTHER ITEMS WITH OPEN FLAMES AWAY FROM THIS PRODUCT AT ALL TIMES.
- **Do not place the Set-top box and/or remote control in the following environments:**
  - Keep the product away from direct sunlight.
  - An area with high humidity such as a bathroom
  - Near any heat source such as stoves and other devices that produce heat.
  - Near kitchen counters or humidifiers where they can easily be exposed to steam or oil.
  - An area exposed to rain or wind.
  - Do not expose to dripping or splashing and do not place objects filled with liquids, such as vases, cups, etc. on or over the apparatus (e.g., on shelves above the unit).
  - Near flammable objects such as gasoline or candles, or expose the Set-top box to direct air conditioning.
  - Do not install in excessively dusty places.

  Otherwise, this may result in fire, electric shock, combustion/ explosion, malfunction or product deformation.
- **Ventilation**
  - Install your Set-top box where there is proper ventilation. Do not install in a confined space such as a bookcase.
  - Do not install the product on a carpet or cushion.
  - Do not block or cover the product with cloth or other materials while unit is plugged in.
- Take care not to touch the ventilation openings. When watching the Set-top box for a long period, the ventilation openings may become hot.
- Protect the power cord from physical or mechanical abuse, such as being twisted, kinked, pinched, closed in a door, or walked upon. Pay particular attention to plugs, wall outlets, and the point where the cord exits the device.
- Do not move the Set-top box while the Power cord is plugged in.
- Do not use a damaged or loosely fitting power cord.
- Be sure to grasp the plug when unplugging the power cord. Do not pull on the power cord to unplug the Set-top box.
- Do not connect too many devices to the same AC power outlet as this could result in fire or electric shock.
- **Disconnecting the Device from the Main Power**
  - The power plug is the disconnecting device. In case of an emergency, the power plug must remain readily accessible.
- Do not let your children climb or cling onto the Set-top box. Otherwise, the Set-top box may fall over, which may cause serious injury.

- **Outdoor Antenna Grounding** (Can differ by country):
  - If an outdoor antenna is installed, follow the precautions below. An outdoor antenna system should not be located in the vicinity of overhead power lines or other electric light or power circuits, or where it can come in contact with such power lines or circuits as death or serious injury can occur. Be sure the antenna system is grounded to provide some protection against voltage surges and built-up static charges Section 810 of the National Electrical Code (NEC) in the U.S.A. provides information with respect to proper grounding of the mast and supporting structure, grounding of the lead-in wire to an antenna discharge unit, size of grounding conductors, location of antenna discharge unit, connection to grounding electrodes and requirements for the grounding electrode. Antenna grounding according to the National Electrical Code, ANSI/NFPA 70
- **Grounding** (Except for devices which are not grounded.)
  - Set-top box with a three-prong grounded AC plug must be connected to a three-prong grounded AC outlet. Ensure that you connect the earth ground wire to prevent possible electric shock.
- Never touch this apparatus or antenna during a lightning storm. You may be electrocuted.
- Make sure the power cord is connected securely to the Set-top box and wall socket if not secured damage to the Plug and socket may occur and in extreme cases a fire may break out.
- Do not insert metallic or inflammable objects into the product. If a foreign object is dropped into the product, unplug the power cord and contact the customer service.
- Do not touch the end of the power cord while it is plugged in. You may be electrocuted.
- **If any of the following occur, unplug the product immediately and contact your local customer service.**
  - The product has been damaged.
  - If water or another substance enters the product (like an AC adapter, power cord, or Set-top box).
  - If you smell smoke or other odors coming from the Set-top box.
  - When lightning storms or when unused for long periods of time.

  Even the Set-top box is turned off by remote control or button, AC power source is connected to the unit if not unplugged in.
- Do not use high voltage electrical equipment near the Set-top box (e.g., a bug zapper). This may result in product malfunction.
- Do not attempt to modify this product in any way without written authorization from LG Electronics. Accidental fire or electric shock can occur. Contact your local customer service for service or repair. Unauthorized modification could void the user's authority to operate this product.
- Use only an authorized attachments / accessories approved by LG Electronics. Otherwise, this may result in fire, electric shock, malfunction, or product damage.
- Never disassemble the AC adapter or power cord. This may result in fire or electric shock.
- Handle the adapter carefully to avoid dropping or striking it. An impact could damage the adapter.
- To reduce the risk of fire or electrical shock, do not touch the Set-top box with wet hands. If the power cord prongs are wet or covered with dust, dry the power plug completely or wipe dust off.
- **Batteries**
  - Store the accessories (battery, etc.) in a safe location out of the reach of children.
  - Do not short circuit, disassemble, or allow the batteries to overheat. Do not dispose of batteries in a fire. Batteries should not be exposed to excessive heat.

- **Moving**
  - When moving, make sure the product is turned off, unplugged, and all cables have been removed. It may take 2 or more people to carry larger Set-top boxs. Do not press or put stress on the front panel of the Set-top box. Otherwise, this may result in product damage, fire hazard or injury.
- Keep the packing anti-moisture material or vinyl packing out of the reach of children.
- Do not allow an impact shock, any objects to fall into the product, and do not drop anything onto the screen.
- Do not press strongly upon the panel with a hand or a sharp object such as a nail, pencil, or pen, or make a scratch on it. It may cause damage to screen.
- **Cleaning**
  - When cleaning, unplug the power cord and wipe gently with a soft/dry cloth. Do not spray water or other liquids directly on the Set-top box. Do not clean your Set-top box with chemicals including glass cleaner, any type of air freshener, insecticide, lubricants, wax (car, industrial), abrasive, thinner, benzene, alcohol etc., which can damage the product and/or its panel. Otherwise, this may result in electric shock or product damage.

ASSEMBLING AND PREPARING

Unpacking

Check your product box for the following items. If there are any missing accessories, contact the local dealer where you purchased your product. The illustrations in this manual may differ from the actual product and item.

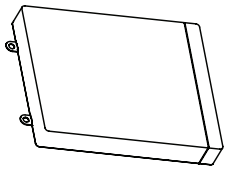

Set-Top Box

Owner's Manual

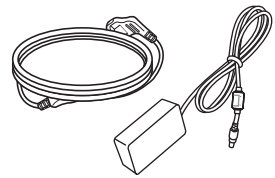

Power Cord / AC-DC Adapter

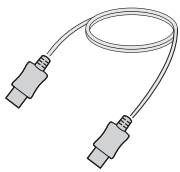

HDMI Cable

TLM Cable

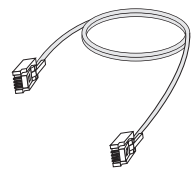

MPI Cable

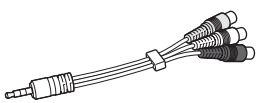

A/V Adapter Cable

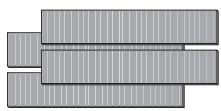

Dual Lock™ (4 EA)

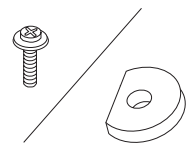

Screw (M6 x L18) / Spacer

Rubber pad (4 EA)

- Do not use any unapproved items to ensure the safety and product's lifespan.
- Any damages or injuries by using unapproved items are not covered by the warranty.

- The items supplied with your product may vary depending upon the model.
- Product specifications or contents of this manual may be changed without prior notice due to upgrade of product functions.
- For an optimal connection, HDMI cables and USB devices should have bezels less than 10 mm (0.39 inches) thick and 18 mm (0.7 inches) width.
- When connecting two USB devices at the same time, each one should have bezels less than 8.5 mm (0.33 inches) thick.

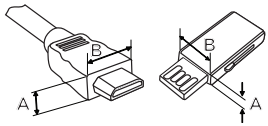

*A ≦ 10 mm (0.39 inches)
*B ≦ 18 mm (0.7 inches)

- Use an extension cable that supports USB 2.0 if the USB cable or USB flash drive does not fit into your TV's USB port.
- Use a certified cable with the HDMI logo attached. If you do not use a certified HDMI cable, the screen may not display or a connection error may occur.
- Recommended HDMI cable types (3 m (9.84 ft) or less)
  - High Speed HDMI®/™ cable
  - High Speed HDMI®/™ cable with Ethernet
- Do not use any unapproved items to ensure the safety and lifespan of the product.
- Any damages or injuries by using unapproved items are not covered by the warranty.
- When connecting via a wired LAN, it is recommended to use a CAT 7 cable.

Parts and Components

Front Panel

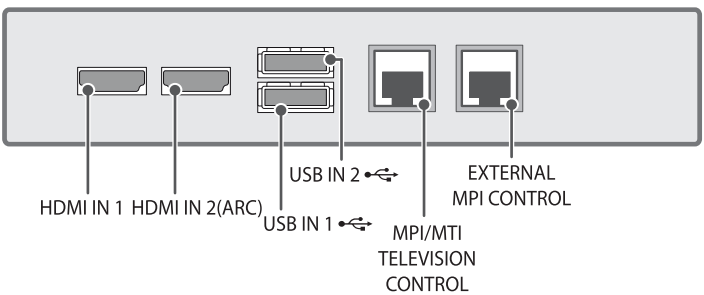

Back Panel

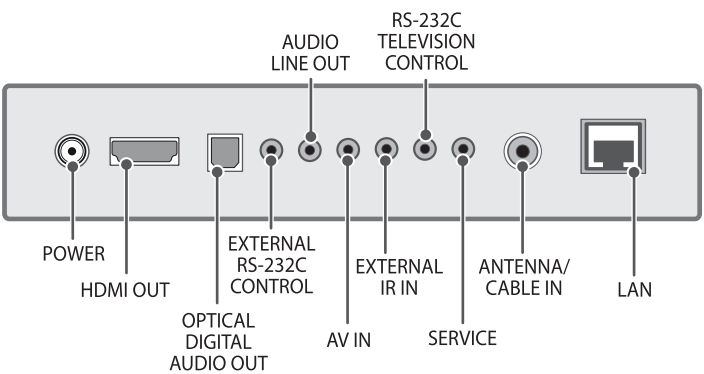

How to use rubber pads (optional)

(Image shown may differ from your product.)

Attach the rubber pads to the Set-Top Box and use it when you want to.

1 Attach the rubber pads to the bottom of the product as shown in the image.

2 Press firmly the whole part of rubber pads to ensure firm fastening.

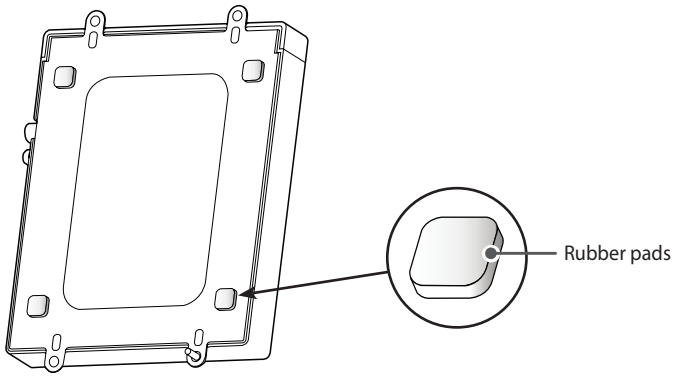

- Doing so can prevent the product from sliding.
- If Set-Top Box is not a perfect fit on the rear side of your TV, please place and use it on a flat surface.
- Please do not attach rubber pads with excessive force.
- Please make sure no foreign substances exist on the surface of the product, and then firmly attach the rubber pads.

How to Use Dual Lock™ (Optional)

(Image shown may differ from your product.)

Attach the Set-Top Box to the TV and use it when you want to.

1 Attach the mated pairs of Dual Lock™ strips together. Press firmly on the attached strip to ensure the Dual Lock™ strip is firmly joined together.

2 Remove the protection paper from the adhesive side of the Dual Lock™ strip and attach to the back of the set top box as shown

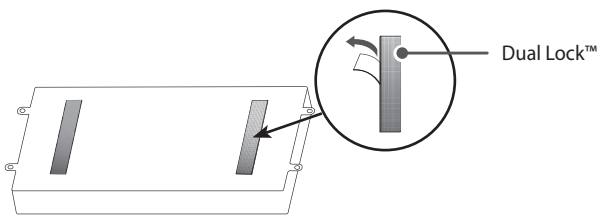

3 After removing the protection paper from the spacer, stick it to a VESA screw hole on the back of the TV. (However, you can choose the location to attach the spacer randomly by considering the shape of the rear side of the TV and the attachment location of the Set-Top Box.)

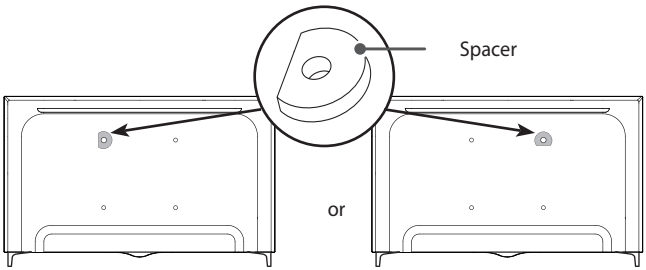

4 After removing the protection paper from the Dual Lock™, stick Set-Top Box to the TV. Insert and tighten the screw on the hole with the spacer attached. (When tightening the screws, be sure not to over tighten them to avoid deformation of the spacer.)

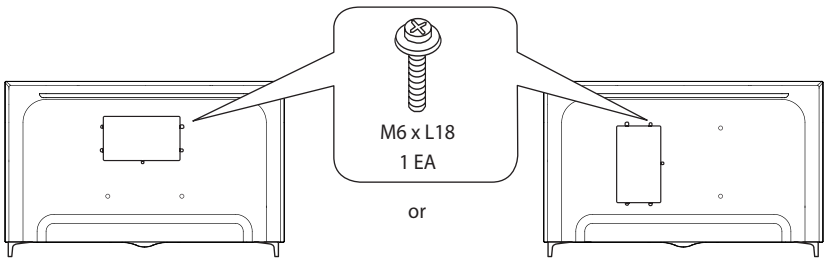

- Do not mount by Dual lock™ only without screw.
- If Set-Top Box is not a perfect fit on the rear side of your TV, please place and use it on a flat surface.
- Do not tighten the screw with excessive force.
- Be sure the product surface is clean, and then firmly attach the Dual Lock™.
- Before attaching the Set-Top Box to the TV, let the attached Dual Lock™ dry for at least three days.

Optional Extras

Optional extras can be changed or modified for quality improvement without any notification. Contact your dealer for buying these items. These devices work only with certain models. The model name or design may be changed due to the manufacturer's circumstances or policies.

(Depending upon model)

AN-MR18HA Magic Remote

MAKING CONNECTIONS

ENGLISH

(Image shown may differ from your product.)

You can connect various external devices to the product. Supported external devices are: HD receivers, DVD players, VCRs, audio systems, USB storage devices, PC, gaming devices, and other external devices. For more information on external device's connection, refer to the manual provided with each device.

- The external device connections shown may differ slightly from illustrations in this manual.
- Connect external devices to the Set-Top Box regardless about the order of the Set-Top Box port.
- If you connect a gaming device to the Set-Top Box, use the cable supplied with the gaming device.
- Refer to the external equipment's manual for operating instructions.
- Using a DVI to HDMI cable may cause compatibility issues.
- Some USB Hubs may not work. If a USB device connected through a USB Hub is not detected, connect it directly to the USB port on the TV.
- It is recommended that you use a USB hub or USB HDD with a power supply. (If the power supplied is not sufficient, the USB storage device may not be detected properly.)
- It is recommended that you use an external USB HDD with a rated voltage of 5 V of less and a rated current of 500 mA or less.

Connecting an Antenna or Cable

Connect an antenna, cable, or cable box to watch TV. The illustrations may differ from the actual items and an RF cable is optional.

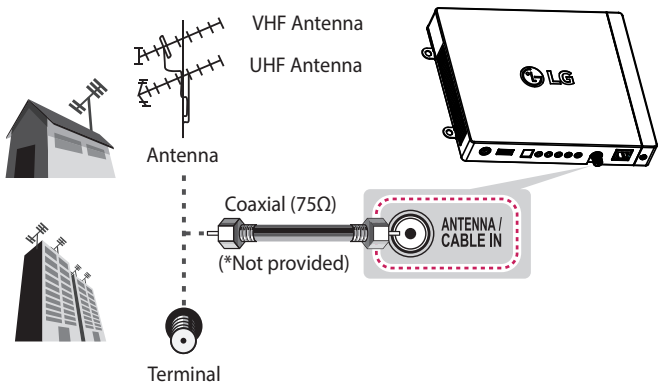

- Make sure not to bend the copper wire of the RF cable.

Copper wire 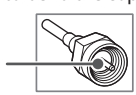

- Complete all connections between devices, and then connect the power cord to the power outlet to prevent damage to your Set-Top Box.
- Use a signal splitter to use 2 Set-Top Boxes or more.
- DTV Audio Supported Codec: MPEG, Dolby Digital

Other Connections

(Image shown may differ from your product.)

Connect your Set-Top Box to external devices. For the best picture and audio quality, connect digital devices using an HDMI cable.

- A separate cable is not provided.

Front

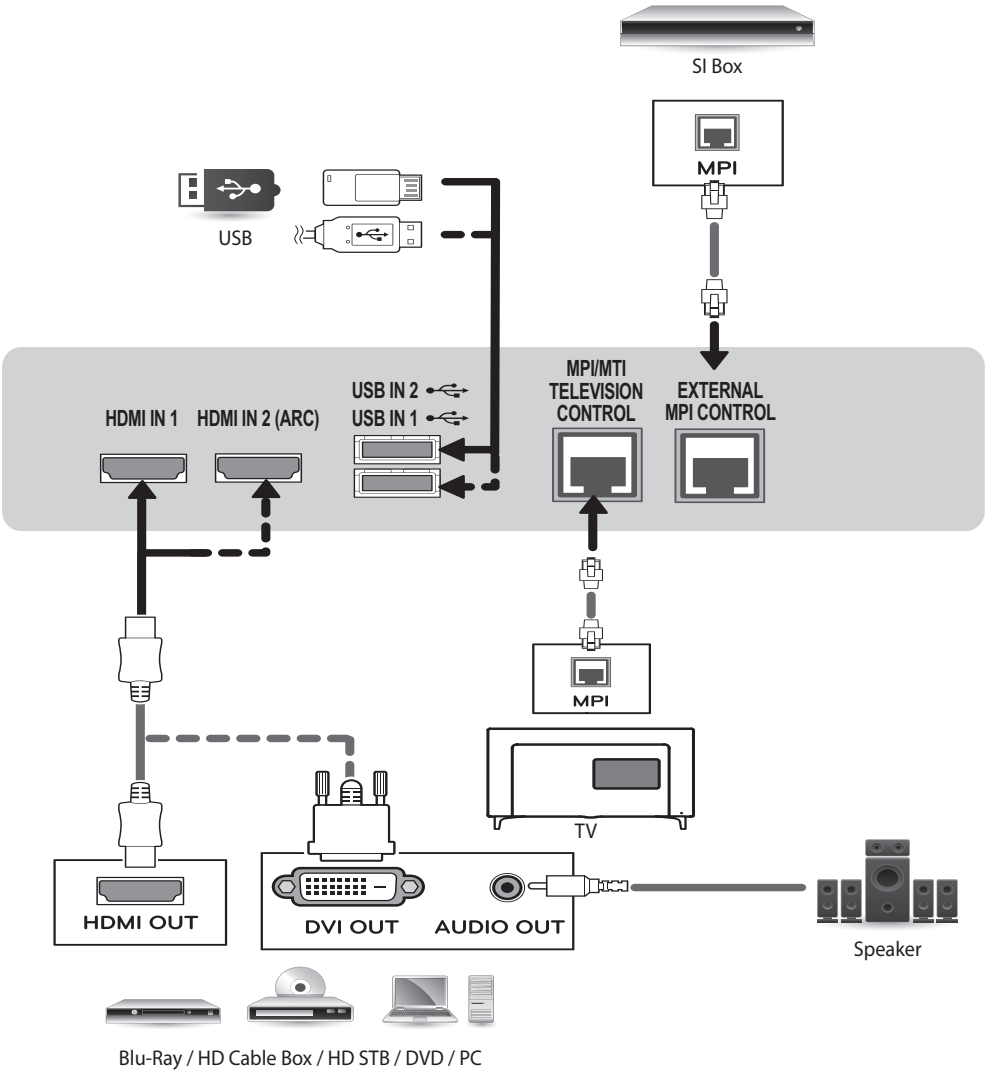

Back

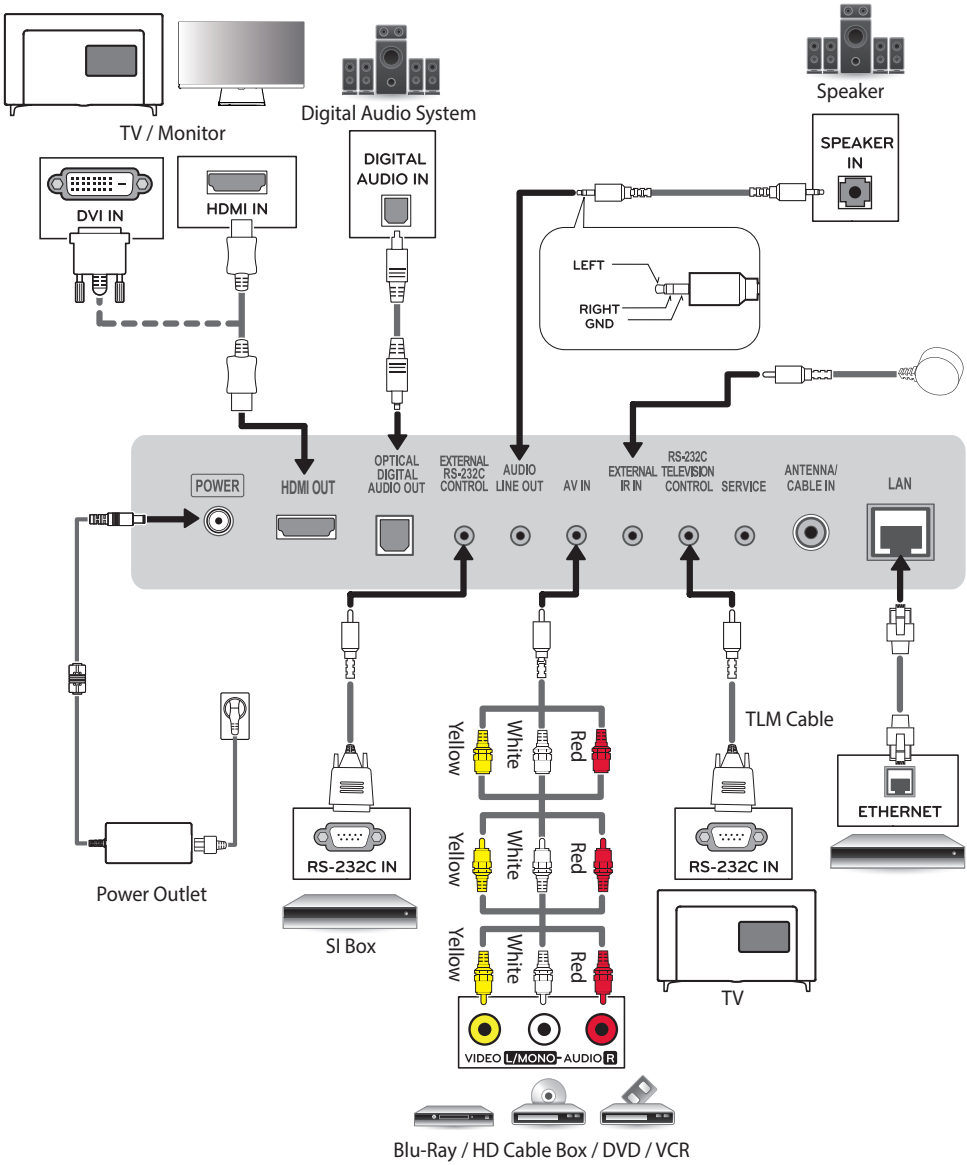

- Audio Line Out Jack should be connected with SE (Single Ended) mode 3-pin type audio cable. Use only with the 3 Pole 3.5 mm (0.1 inches) Stereo Jack.

LICENSES

Supported licenses may differ by model. For more information about licenses, visit *www.lg.com*.

Manufactured under license from Dolby Laboratories. Dolby, Dolby Vision, Dolby Vision IQ, Dolby Audio, Dolby Atmos, and the double-D symbol are trademarks of Dolby Laboratories Licensing Corporation.

HDMI™
HIGH-DEFINITION MULTIMEDIA INTERFACE

The terms HDMI, HDMI High-Definition Multimedia Interface, HDMI trade dress and the HDMI Logos are trademarks or registered trademarks of HDMI Licensing Administrator, Inc.

HEVC Advance™
Covered by patents at patentlist.accessadvance.com

Open Source Software Notice Information

To obtain the source code that is contained in this product, under GPL, LGPL, MPL, and other open source licenses that have the obligation to disclose source code, and to access all referred license terms, copyright notices and other relevant documents, please visit *https://opensource.lge.com*.

LG Electronics will also provide open source code to you on CD-ROM for a charge covering the cost of performing such distribution (such as the cost of media, shipping, and handling) upon email request to *opensource@lge.com*.

This offer is valid to anyone in receipt of this information for a period of three years after our last shipment of this product.

MAINTENANCE

Cleaning Your Set-Top Box

Clean your Set-Top Box regularly to keep it at peak performance and to extend the product's lifespan.

To remove dust or light dirt, wipe the surface with a dry, clean, and soft cloth.

To remove major dirt, wipe the surface with a soft cloth dampened in clean water or a diluted mild detergent. Then wipe immediately with a dry cloth.

Remove the accumulated dust or dirt on the AC/DC adapter regularly.

- Before cleaning, turn the power off and disconnect the power cord and all other cables.
- When the Set-Top Box is left unattended or unused for a long time, disconnect the AC/DC adapter from the wall outlet to prevent possible damage from lightning or power surges.
- Do not push, rub, or hit the surface with your fingernail or a sharp object, as this may result in scratches on the product cover.
- Do not use any chemicals, such as waxes, benzene, alcohol, thinners, insecticides, air fresheners, or lubricants, as these may damage the product's finish and cause discoloration.
- Do not spray liquid onto the surface. If water enters the Set-Top Box, it may result in fire, electric shock, or malfunction.

TROUBLESHOOTING

The software may be updated for improvement in performance. The customer is responsible to ensure the compatibility of their equipment with any LG Electronics software. If needed, please consult LG Electronics and update new software versions according to the guidance provided by LG Electronics.

Problem	Solution
Cannot control the Set-Top Box with the remote control.	• Check if anything such as tape has been placed over the receiver. • Check if there is any obstacle between the product and the remote control. • Replace the batteries with new fresh ones.
Set-Top Box does not output any video or audio.	• Check if the product is turned on. • Check if the power cord is connected to a wall outlet. • Check if there is a problem in the wall outlet by connecting other products.
Set-Top Box turns off suddenly.	• Check the power control settings. The power supply may be interrupted. • Check if the auto off feature is activated in the Time settings.
When connecting to the PC (HDMI/ DVI), No signal or Invalid Format is displayed.	• Turn the Set-Top Box off/on using the remote control. • Reconnect the HDMI/DVI cable. • Restart the PC with the Set-Top Box on.

SPECIFICATIONS

Product specifications may be changed without prior notice due to upgrade of product functions.

Television System		ATSC, NTSC-M, 64 & 256 QAM
Program Coverage		VHF 2-13, UHF 14-69, DTV 2-69, CATV 1-135, CADTV 1-135
External Antenna Impedance		75 Ω
Environment condition	Operating Temperature	0 °C to 40 °C (32 °F to 104 °F)
	Operating Humidity	Less than 80 %
	Storage Temperature	-20 °C to 60 °C (-4 °F to 140 °F)
	Storage Humidity	Less than 85 %

MODELS	STB-6500-UA, STB-6500-UB
Dimensions (W x H x D)	233 x 29.8 x 180.5 (mm)
	9.1 x 1.1 x 7.1 (inches)
Weight	0.72 kg (1.5 lbs)
Power requirement	19 V ⎓ 2.7 A
AC/DC Adapter	Manufacturer: APD / Model: DA-65F19 Manufacturer: CHICONY ELECTRONICS CO., LTD / Model: A16-065N4A Manufacturer : Lien Chang / Model : LCAP40 Manufacturer: SHENZHEN HONOR ELECTRONIC CO.,LTD. / Model: ADS-65AI-19-3 19065E
	In: AC 100-240 V ~ 50 / 60 Hz Out: DC 19 V ⎓ 3.42 A

Wireless Module (LGSBWAC92) Specifications	
Wireless LAN (IEEE 802.11a/b/g/n/ac)	
Frequency Range	Output Power (Max.)
2400 to 2483.5 MHz	18 dBm
5150 to 5725 MHz	18 dBm
5725 to 5850 MHz	18 dBm
Bluetooth	
Frequency Range	Output Power (Max.)
2400 to 2483.5 MHz	8 dBm

- As band channels can vary per country, the user cannot change or adjust the operating frequency. This product is configured for the regional frequency table.
- For consideration of the user, this device should be installed and operated with a minimum distance of 20 cm (7.8 inches) between the device and the body.
- FCC ID: BEJLGSBWAC92 / IC: 2703H-LGSBWAC92

HDMI-DTV supported mode

Resolution	Horizontal Frequency (kHz)	Vertical Frequency (Hz)
640 x 480p	31.46	59.94
	31.5	60
720 x 480p	31.46	59.94
	31.5	60
720 x 576p	31.25	50
1280 x 720p	44.95	59.94
	45	60
	37.5	50
1920 x 1080i	28.12	50
	33.71	59.94
	33.75	60
1920 x 1080p	26.97	23.97
	27	24
	33.71	29.97
	33.75	30
	56.25	50
	67.43	59.94
	67.5	60
1920 x 1080p	112.5	100
	134.86	119.88
	135	120
3840 x 2160p	53.94	23.97
	54	24
	56.25	25
	67.43	29.97
	67.5	30
	112.5	50
	134.86	59.94
	135	60
4096 x 2160p	53.94	23.97
	54	24
	56.25	25
	67.43	29.97
	67.5	30
	112.5	50
	134.86	59.94
	135	60

HDMI-PC supported Mode

- PC audio is not supported.
- Use HDMI IN 1 for PC mode. (Depending on model)

Resolution	Horizontal Frequency (kHz)	Vertical Frequency (Hz)
640 x 350	31.46	70.09
720 x 400	31.46	70.08
640 x 480	31.46	59.94
800 x 600	37.87	60.31
1024 x 768	48.36	60
1360 x 768	47.71	60.01
1152 x 864	54.34	60.05
1280 x 1024	63.98	60.02
1920 x 1080	67.5	60
	134.86	119.88
	135	120
2560 x 1440	88.78	59.95
3840 x 2160	53.94	23.97
	54	24
	56.25	25
	67.43	29.97
	67.5	30
	112.5	50
	134.86	59.94
	135	60
4096 x 2160	53.94	23.97
	54	24
	56.25	25
	67.43	29.97
	67.5	30
	112.5	50
	134.86	59.94
	135	60

Supported Photo Formats

File Format	Format	Resolution
.jpeg, .jpg, .jpe	JPEG	Minimum: 64 (W) x 64 (H) Maximum (Normal Type): 15360 (W) x 8640 (H) Maximum (Progressive Type): 1920 (W) x 1440 (H)
.png	PNG	Minimum: 64 (W) x 64 (H) Maximum: 5760 (W) x 5760 (H)
.bmp	BMP	Minimum: 64 (W) x 64 (H) Maximum: 1920 (W) x 1080 (H)

Supported Audio Formats

File Format	Item	Info
.mp3	Bit rate	32 kbps - 320 kbps
	Sample freq.	16 kHz - 48 kHz
	Support	MPEG1, MPEG2
	Channels	mono, stereo
.wav	Bit rate	-
	Sample freq.	8 kHz - 96 kHz
	Support	PCM
	Channels	mono, stereo
.ogg	Bit rate	64 kbps - 320 kbps
	Sample freq.	8 kHz - 48 kHz
	Support	Vorbis
	Channels	mono, stereo
.wma	Bit rate	128 kbps - 320 kbps
	Sample freq.	8 kHz - 48 kHz
	Support	WMA
	Channels	up to 6 ch
.flac	Bit rate	-
	Sample freq.	8 kHz - 96 kHz
	Support	FLAC
	Channels	mono, stereo

- The number of supported program may vary depending on the sample frequency.

Supported Video Formats

Extension	Codec	
.asf .wmv	Video	VC-1 Advanced Profile (except for WMVA), VC-1 Simple and Main Profiles
	Audio	WMA Standard (except for WMA v1/ WMA Speech)
.avi	Video	Xvid (GMC is not supported), H.264/AVC, Motion Jpeg, MPEG-4
	Audio	MPEG-1 Layer I, II, MPEG-1 Layer III (MP3), Dolby Digital, LPCM, ADPCM
.mp4 .m4v .mov	Video	H.264/AVC, MPEG-4, HEVC, AV1
	Audio	Dolby Digital, Dolby Digital Plus, AAC, MPEG-1 Layer III (MP3), Dolby AC-4
.3gp .3g2	Video	H.264/AVC, MPEG-4
	Audio	AAC, AMR-NB, AMR-WB
.mkv	Video	MPEG-2, MPEG-4, H.264/AVC, VP8, VP9, HEVC, AV1
	Audio	Dolby Digital, Dolby Digital Plus, AAC, PCM, MPEG-1 Layer I, II, MPEG-1 Layer III (MP3)
.ts .trp .tp .mts	Video	H.264/AVC, MPEG-2, HEVC
	Audio	MPEG-1 Layer I, II, MPEG-1 Layer III (MP3), Dolby Digital, Dolby Digital Plus, AAC, PCM, Dolby AC-4
.mpg .mpeg .dat	Video	MPEG-1, MPEG-2
	Audio	MPEG-1 Layer I, II, MPEG-1 Layer III (MP3)
.vob	Video	MPEG-1, MPEG-2
	Audio	Dolby Digital, MPEG-1 Layer I, II, DVD-LPCM

Cautions for Video Playback

- ULTRA HD Video: 3840 x 2160, 4096 x 2160
- Some HEVC encoded ULTRA HD videos other than the content officially provided by LG Electronics may not be played.
- Some codecs can be supported after a software upgrade.

Extension	Codec	
.mkv .mp4 .ts	Video	H.264/AVC, HEVC
	Audio	Dolby Digital, Dolby Digital Plus, AAC

Supported External Subtitles

Subtitle	Format
External Subtitle	*.smi, *.srt, *.sub (MicroDVD, SubViewer 1.0/2.0), *.ass, *.ssa, *.txt (TMPlayer), *.psb (PowerDivX), *.dcs (DLP Cinema)
Embedded Subtitle	Matroska(mkv): Sub Station Alpha (SSA), Advanced Sub Station Alpha (ASS), SRT MP4: Timed Text

To use HDMI Ultra HD Deep Color

- ⚙ → ⋮ → [Picture] → [HDMI Ultra HD Deep Color]
  - On: Support 4K @ 60 Hz (4:4:4, 4:2:2, 4:2:0)
  - Off: Support 4K @ 60 Hz 8 bit (4:2:0)

  If the device connected to Input Port also supports ULTRA HD Deep Color, your picture may be clearer. However, if the device doesn't support it, it may not work properly. In that case, change the TV's [HDMI Ultra HD Deep Color] setting to off.
  - This feature is available only on certain models which support HDMI Ultra HD Deep Color.

Regulatory

FCC Notice

(For USA)

This equipment has been tested and found to comply with the limits for a Class B digital device, pursuant to Part 15 of the FCC Rules. These limits are designed to provide reasonable protection against harmful interference in a residential installation. This equipment generates, uses, and can radiate radio frequency energy and, if not installed and used in accordance with the instructions, may cause harmful interference to radio communications. However, there is no guarantee that interference will not occur in a particular installation. If this equipment does cause harmful interference to radio or television reception, which can be determined by turning the equipment off and on, the user is encouraged to try to correct the interference by one or more of the following measures:

- Reorient or relocate the receiving antenna.
- Increase the separation between the equipment and the receiver.
- Connect the equipment to an outlet on a circuit different from that to which the receiver is connected.
- Consult the dealer or an experienced radio/TV technician for help.

This device complies with part 15 of the FCC Rules. Operation is subject to the following two conditions: (1) this device may not cause harmful interference and (2) this device must accept any interference received, including interference that may cause undesired operation. Any changes or modifications in construction of this device which are not expressly approved by the party responsible for compliance could void the user's authority to operate the equipment.

FCC Radio Frequency Interference Requirements (for UNII devices)

(For USA)

High power radars are allocated as primary users of the 5.25 to 5.35 GHz and 5.65 to 5.85 GHz bands. These radar stations can cause interference with and/or damage this device. This device cannot be co-located with any other transmitter.

Transmitters in the 5.925-7.125 GHz band are prohibited from operating to control or communicate with unmanned aircraft systems.

FCC RF Radiation Exposure Statement

(For USA)

[For having wireless function (WLAN, Bluetooth,...)]

This equipment complies with FCC radiation exposure limits set forth for an uncontrolled environment. This transmitter must not be co-located or operating in conjunction with any other antenna or transmitter.

This equipment should be installed and operated with minimum distance 20 cm (7.8 inches) between the antenna and your body. Users must follow the specific operating instructions for satisfying RF exposure compliance.

Industry Canada Statement

(For Canada)

[For having wireless function (WLAN, Bluetooth,...)]

This device contains licence-exempt transmitter(s)/ receiver(s) that comply with Innovation, Science and Economic Development Canada's licence-exempt RSS(s). Operation is subject to the following two conditions:

(1) This device may not cause interference.

(2) This device must accept any interference, including interference that may cause undesired operation of the device.

IC Radiation Exposure Statement

(For Canada)

[For having wireless function (WLAN, Bluetooth,...)]

This equipment complies with IC radiation exposure limits set forth for an uncontrolled environment. This equipment should be installed and operated with minimum distance 20 cm (7.8 inches) between the antenna & your body.

NOTE: THE MANUFACTURER IS NOT RESPONSIBLE FOR ANY RADIO OR TV INTERFERENCE CAUSED BY UNAUTHORIZED MODIFICATIONS TO THIS EQUIPMENT. SUCH MODIFICATIONS COULD VOID THE USER'S AUTHORITY TO OPERATE THE EQUIPMENT.

RSS-247 Requirement

(For Canada)

[For product having the wireless function using 5 GHz frequency bands]

(1) The device for operation in the band 5150–5250 MHz is only for indoor use to reduce the potential for harmful interference to co-channel mobile satellite systems;

(2) For devices with detachable antenna(s), the maximum antenna gain permitted for devices in the bands 5250-5350 MHz and 5470-5725 MHz shall be such that the equipment still complies with the e.i.r.p. limit;

(3) For devices with detachable antenna(s), the maximum antenna gain permitted for devices in the band 5725-5850 MHz shall be such that the equipment still complies with the e.i.r.p. limits as appropriate; and

(4) [For devices operating in the band 5250-5350 MHz having an e.i.r.p. greater than 200 mW] Antenna type(s), antenna models(s), and worst-case tilt angle(s) necessary to remain compliant with the e.i.r.p. elevation mask requirement set forth in section 6.2.2.3 of RSS-247 shall be clearly indicated.

Users should also be advised that high-power radars are allocated as primary users (i.e. priority users) of the bands 5250-5350 MHz and 5650-5850 MHz and that these radars could cause interference and/or damage to LE-LAN devices.

[For product having the wireless function using 6 GHz frequency bands]

(1) Devices shall not be used for control of or communications with unmanned aircraft systems.

(2) Devices shall not be used on oil platforms.

(3) Devices shall not be used on aircraft, except for the low-power indoor access points, indoor subordinate devices, low-power client devices, and very low-power devices operating in the 5925-6425 MHz band, that may be used on large aircraft as defined in the Canadian Aviation Regulations, while flying above 3,048 meters (10,000 feet).

(4) Devices shall not be used on automobiles.

(5) Devices shall not be used on trains.

(6) Devices shall not be used on maritime vessels.

NOTE TO CABLE/TV INSTALLER

(For USA and Canada)

This reminder is provided to call the CATV system installer's attention to Article 820-40 of the National Electric Code (U.S.A.). The code provides guidelines for proper grounding and, in particular, specifies that the cable ground shall be connected to the grounding system of the building, as close to the point of the cable entry as practical.

Symbols

~	Refers to alternating current (AC).
⎓	Refers to direct current (DC).
⧈	Refers to class II equipment.
⏻	Refers to stand-by.
|	Refers to "ON" (power).
ϟ	Refers to dangerous voltage.

LG Take-back & Recycling Policy

(For USA)

LG Electronics offers a customized e-waste take-back & recycling service that meets local needs and requirements in the countries where e-waste regulations are in place, and also provides product take-back & recycling service voluntarily in some regions. LG Electronics evaluates products' recyclability at the design step selectively, with the goal of improving recyclability where practicable. Through these activities, LG Electronics seeks to contribute to conserving natural resources and protecting the environment. For more information, please visit our global site at *https://www.lg.com/recycling*

Dominican Republic only

WEEE

Disposal of your old appliance

1 This crossed-out wheeled bin symbol indicates that waste electrical and electronic products (WEEE) should be disposed of separately from the municipal waste stream.

2 Old electrical products can contain hazardous substances so correct disposal of your old appliance will help prevent potential negative consequences for the environment and human health. Your old appliance may contain reusable parts that could be used to repair other products, and other valuable materials that can be recycled to conserve limited resources.

3 You can take your appliance to any of the authorized centers for collection, If you want to know an updated list of countries that have this service, visit the page *https://www.lg.com/global/take-back-recycling-global-network-south-america*

Eliminación de su viejo electrodoméstico

1 El símbolo del contenedor de basura tachado con un aspa indica que la recogida separada de aparatos eléctricos y electrónicos (AEE) debe realizarse de manera separada.

2 Los aparatos eléctricos antiguos pueden contener sustancias peligrosas, de modo que la correcta eliminación del antiguo aparato ayudará a evitar posibles consecuencias negativas para el medio ambiente y para la salud humana. El antiguo aparato puede contener piezas reutilizables que podrían utilizarse para reparar otros productos y otros materiales valiosos que pueden reciclarse para conservar los recursos limitados.

3 Puedes llevar tu aparato a cualquiera de los centros autorizados de recoleccion de residuos electricos y electronicos. Si deseas conocer una lista actualizada de los paises que cuentan con este servicio, visite la pagina *https://www.lg.com/global/take-back-recycling-global-network-south-america*

Supplier's Declaration of Conformity

Trade Name	LG
Responsible Party	LG Electronics USA, Inc.
Address	111 Sylvan Avenue, North Building, Englewood Cliffs, NJ 07632
E-mail	lg.environmental@lge.com

The model and serial number of the product are located on the back and on one side of the product. Record them below in case you ever need service.

MODEL _____

SERIAL NO. _____

LG Customer Information Center

For inquires or comments,
visit www.lg.com or call;

1-888-865-3026 USA, Commercial User

1-855-286-2456 CANADA