ENGLISH

www.lg.com

Copyright © 2024 LG Electronics Inc.
All Rights Reserved.

Wall Mount Bracket

OWNER'S MANUAL

Safety and Reference

WB24GDB

Please read this manual carefully before operating your set and retain it for future reference.

The model and serial number of the product are located on the back and on one side of the product. Record them below in case you ever need service.

Model _____

Serial No. _____

MFL72128405240 5REV00

Accessories

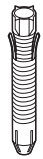

Wall mount fixing anchors 6 pcs.

Wall mount fixing screws 6 pcs.

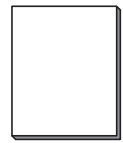

Owner's Manual

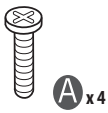

Guide Spacer Fixing Screws A 4 pcs.
(M8 x L18)

Guide Spacer A 4 pcs.

TV protection cushion 4 pcs.

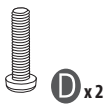

Levelling screws 2 pcs.

Circular sheet 4 pcs.

When using rear inputs

Guide Spacer Fixing Screws B 4 pcs.
(M8 x L44)

Guide Spacer B 4 pcs.

Precautions for Safety

- Professional installers should read this manual carefully to ensure proper installation.
- Professional installers should forward this manual to customers after installation and encourage them to read and store it in a convenient place for future reference.
- After reading the installation manual, keep it in a convenient place for future reference.

⚠

Ask a professional installer appointed by the store for installation of the product.
Installation by someone other than a professional installer is extremely dangerous and may result in personal injury.

Contact a professional installer appointed by the store prior to moving or replacing the product after installation.
Installation is a technical task and safety issues may arise if an individual attempts to install or move the product personally.

When installing the product on a wall, do not hang the power line or signal cables from the back of the TV.
This can damage the cords, resulting in a fire, electrical shock or malfunction of the product.

Do not install the product in an unstable site that cannot withstand its weight.
If the installation site lacks sufficient rigidity, the product may fall and cause personal injury.

Do not hang on the product or subject it to severe impact after installation.
Doing so may cause the product to fall and cause personal injury.

⚠

Install the product according to the instructions in the installation manual.
Failure to install the product according to the instructions in the installation manual can result in serious personal injury or product damage.

Be sure to have at least four people when installing the product or adjusting the product's height.
Attempting to perform installation or adjustments personally may result in personal injury or damage to the product.

Make sure a wall is available prior to proceeding with installation. Make use of the anchors and screws provided with the product.
Use of any unauthorized anchors or screws may not support the product's weight, which poses safety risks.

When drilling in the wall for installation, be sure to use drill bits and drills of the specified diameter. Follow the instructions for the hole depth.
Drilling and installing the product in ways other than specified in the installation manual may result in an unstable installation and potential safety issues.

Do not wipe the product with a wet towel or use any heating equipment or humidifier under the place where the product is installed.
Liquid water or vapor may enter the product and excessive heat may cause fire, electric shock, or malfunction.

Do not install the product near a fire sprinkler or detector, a place where vibration or shock may occur or near a high-voltage wire or power source.

Unplug the product's power cord from the wall outlet before installing.
Installing the product while the power cord is plugged in may result in electric shock or fire.

Do not install the product with bare hands. Be sure to wear work gloves.
Attempting installation without work gloves may cause personal injury.

Connect the product with the supplied cable. Use of an unauthorized cable may result in damage by friction with the wall. Make sure to use the supplied cable gender. (This may vary by model.)

Before Installation

- Do not use the product for any purpose other than installing the TV on a wall.
- Avoid product damage and safety accidents caused by careless installing or use of improper or unauthorized wall mount.
- Follow the instructions in the installation manual for a convenient installation of the wall mount.
- Immediately discontinue installation and contact the service center if you cannot fully understand the installation process.

  Use a professional installer if any installation issues remain after the inquiry.
- Installation of this product on a concrete wall or wood stud is recommended. Installation on walls made of other types of plasterboard, plywood, brick, etc., is not recommended since there is a greater chance the product will fall.
- Install the product only on a vertical wall.

  Do not install on a tilted wall that exceeds building standards or on the heavily titled wall or ceiling.

  LG is not responsible for problems caused by improper installation of the product, e.g., heavily tilted walls and ceilings.
- Check the enclosed accessories before installation. We are not responsible for any lost or damaged accessories after the inner packaging is opened.
- When an infant or small child swallows the enclosed accessories, various safety accidents such as choking may occur. Keep the enclosed accessories out of the reach of infants and children.
- When tightening screws, tighten until fully snug. Avoid using excessive force when tightening the screws. Doing so may damage the wall and product or reduce the rigidity or performance of the product.
- Avoid installing a TV that exceeds the specified tensile load, and do not allow any external force to be applied to the product.
- Avoid accidents by using work tools with care during installation.
- To prevent any safety hazards, take care when handling tools during the installation.

Tools for Installation

- "+" shaped screwdriver (manual or electric)
- 8 mm spanner
- level
- drill
- Ø 8 mm drill bit for concrete or Ø 4 mm drill bit for steel

How to install

How to install

- The appearance of tools may differ from the enclosed images.
- Always consult a professional when installing a wall mount.

1. Wearing gloves

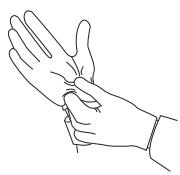

2. Fastening Anchors and Screws

- Check that the material and thickness of the wall and finishing material comply with the installation manual. Before beginning the mounting process, you must be sure the wall is able to support the weight of the TV.
- Should use the enclosed anchors and screws on crack free concrete walls.
- If the wall is not made of concrete, the wall mount must be installed on a rigid support. Never install the product on a plasterboard or wall made of paper or medium-density fiberboard (MDF). In this case, make sure that the wall material can withstand the weight of the TV, and fix the anchor screws to the retaining wall (concrete) or wooden support behind the finishing material. Since the anchors provided with this product may not be suitable for your wall material, be sure to check with a professional before attempting installation.
- Other unspecified walls must be capable of supporting pullout loads of over 70 kgf (686 N) and shear loads of over 100 kgf (980 N) per fastener.
- Use an Ø 8 mm drill bit for concrete and a hammer (impact) drill or Ø 4 mm drill bit for wood stud to drill holes.

For installation on concrete wall

1. Drill holes in anchor locations with a drill bit of Ø 8 mm to a depth of 80 mm to 100 mm.

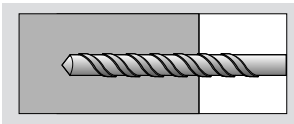

2. Clean the drilled holes.

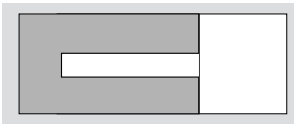

3. Insert the enclosed anchors for fixing the wall mount into the holes. (Use a hammer when inserting anchors.)

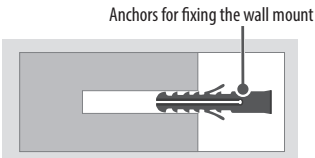

4. Push the wall mount support closely toward the wall to match the hole locations.

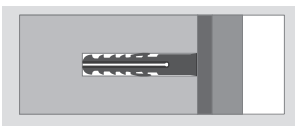

5. Tighten screws for fixing the wall mount to the holes. At this time, tighten the screws with the torque more than 45 kgf/cm to 60 kgf/cm.

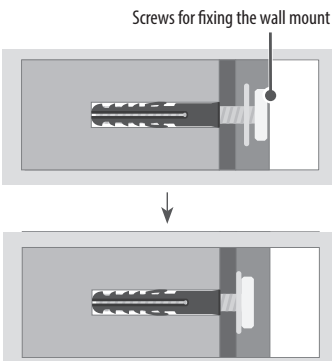

For installation on wood stud

Use the Ø 4 mm drill bit for wood to drill holes with the depth of 76 mm. (Clean the drilled hole.)

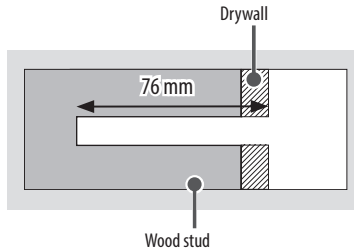

Without using the wall mounting anchor, fasten the wall mounting screw directly to the wood stud.

3. Installing the Wall Mount Bracket

- After aligning the wall mount bracket at the desired position, mark the positions for the fixings, and remove the bracket.
- Fix the bracket in place, as shown in the image.
- Use a level to ensure the wall mount is level.
- If it is not possible to tighten the screw in the marked position, you can do so in the nearest position. However, do not change more than one position in the designated locations.
- Secure two wall-mounting screws on each side of the upper part and one on each side of the lower part.
- Use a "+" driver (manual or electric) or an 8 mm spanner to fully tighten the screws, ensuring the wall, bracket, and screws are in complete contact.

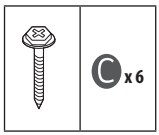

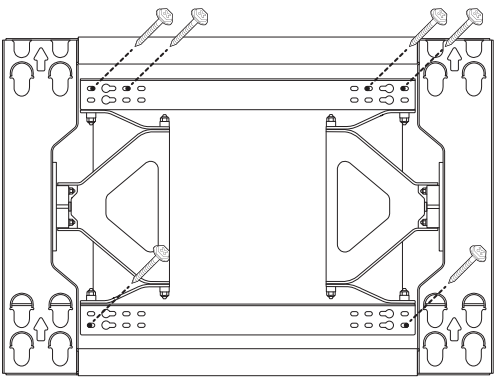

1. Attach the included guide spacer A and guide spacer fixing screw A to the VESA holes.

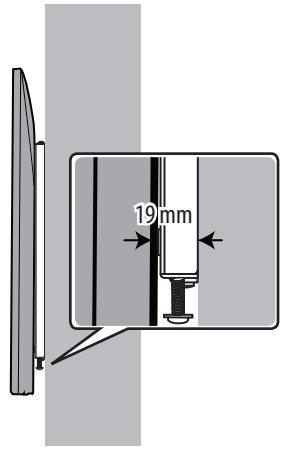

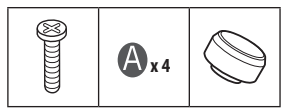

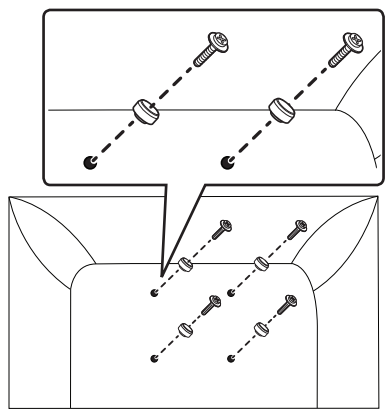

*** The rear of the TV**

For models with circular recesses around the VESA holes of the TV

Attach the included guide spacer A and guide spacer fixing screw A to the VESA holes using a circular sheet.

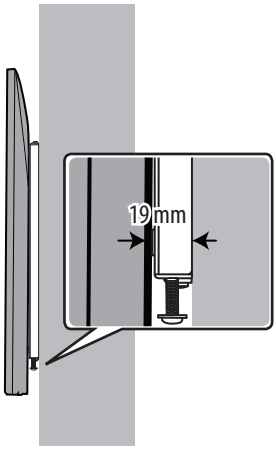

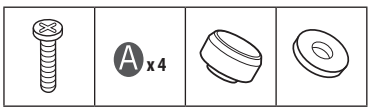

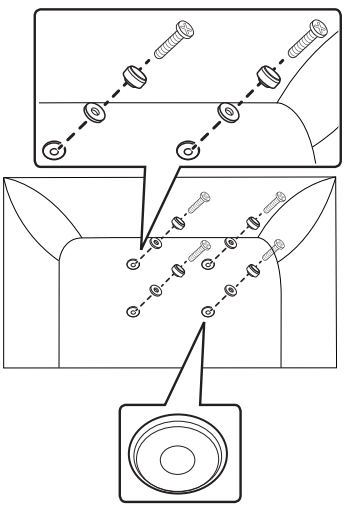

*** The rear of the TV**

When using rear inputs

Attach the included guide spacer B and guide spacer fixing screw B to the VESA holes.

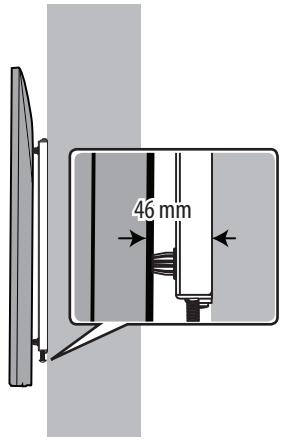

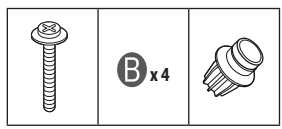

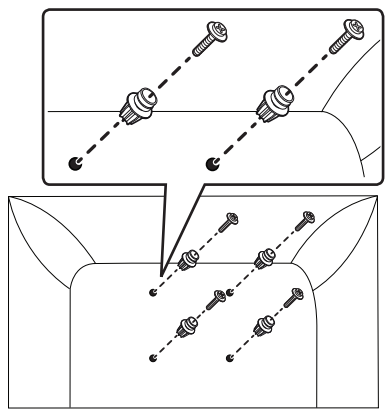

*** The rear of the TV**

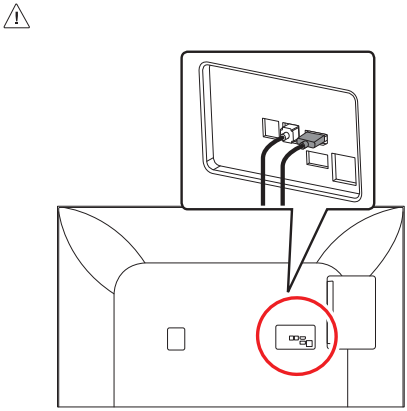

- Only use guide spacer B when utilising the rear inputs. This may cause improper installation of the wall mount bracket.

2. Lift the lock spring upward before installing the wall mount on the wall.

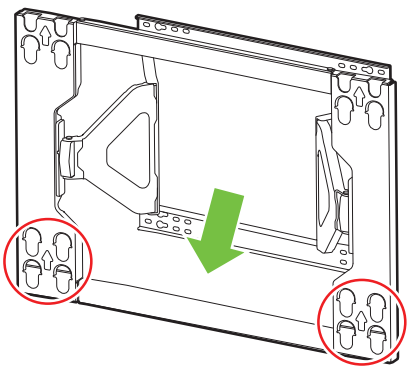

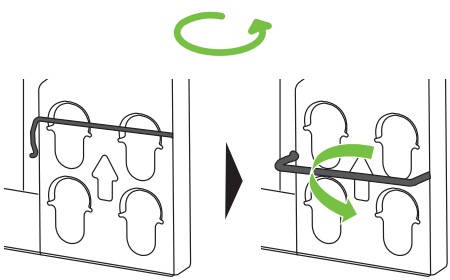

3. After pressing the TV against the wall-mounted bracket, fasten the screws attached to the TV into the wall mount.

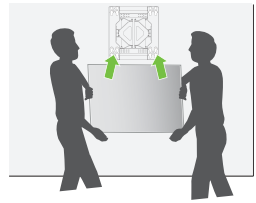

- Ensure two or more people work together when mounting the TV.
- If the product is lifted by one person, it may fall and result in injury or damage.
- Be careful not to trap the power cord between the wall mount bracket and the TV when mounting the TV.
- If the power cord becomes trapped, it may result in product damage.

VESA mounting positions

VESA 600 x 400

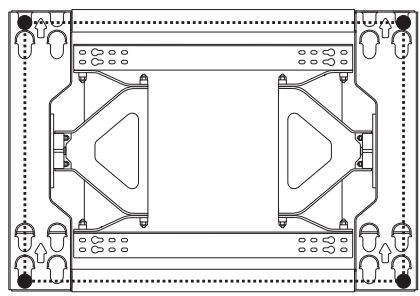

VESA 500 x 400

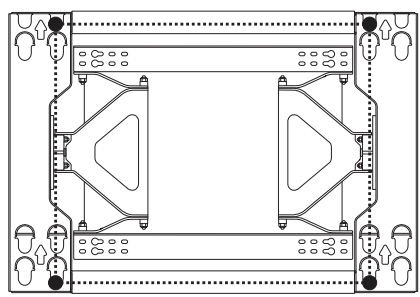

4. Attaching the TV to the Wall Mount Bracket

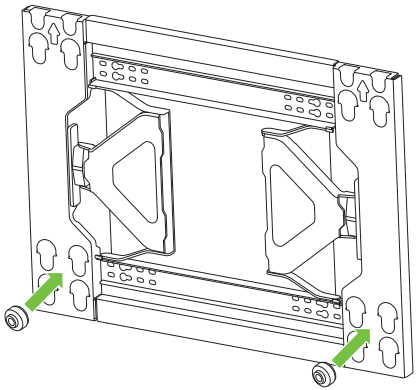

- Place the product on the wall in the direction of the arrow with the guide spacers in the wall mounting bracket. Attach the lower part first, then attach the upper part by slightly lifting up the set.
- Make sure that the product is fixed securely in place by pulling on the bottom of the set.
- If speakers have been attached to the product, lift it by holding the product itself, not the speakers.

⚠

- Make sure that the power cord does not get trapped between the wall mounting bracket and the set during installation.
- A trapped power cord may cause damage to the product.

5. Adjusting the level of the product (tilt)

1. Lower the lock spring.

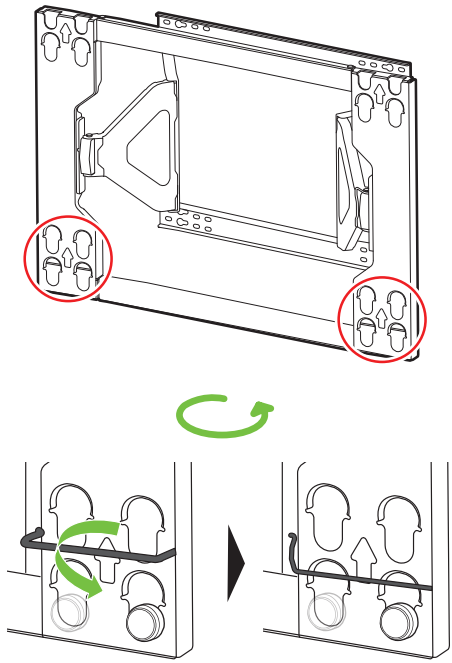

2. If the product is not level after installation, you can adjust it using the screws. The product will move up or down depending on the rotation direction of the screws.

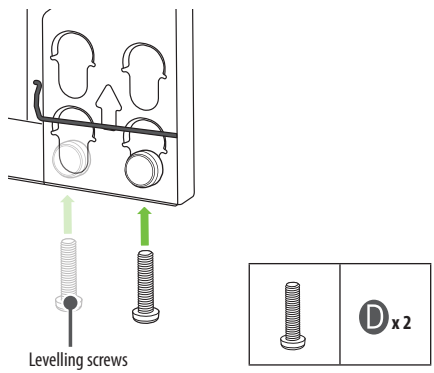

6. Organizing the Cables and Attaching the Set Protection Cushion

Attach the set protection cushion to reduce the shock received by the set as it bumps into the wall when tilting. Attach it to the desired location as shown in the image.

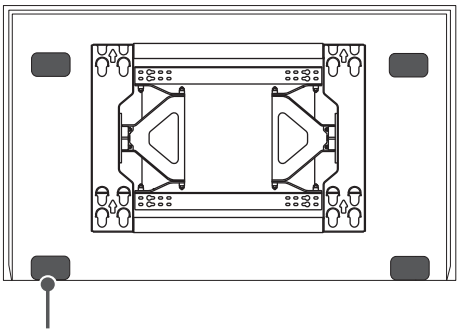

Specifications

[Unit : mm]

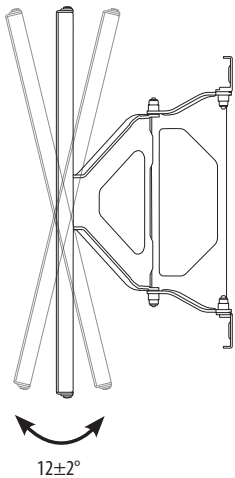

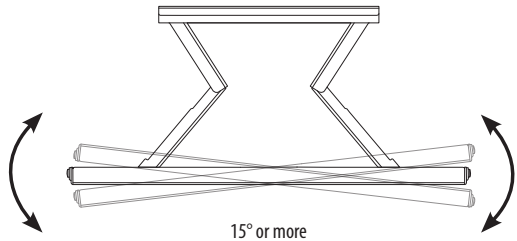

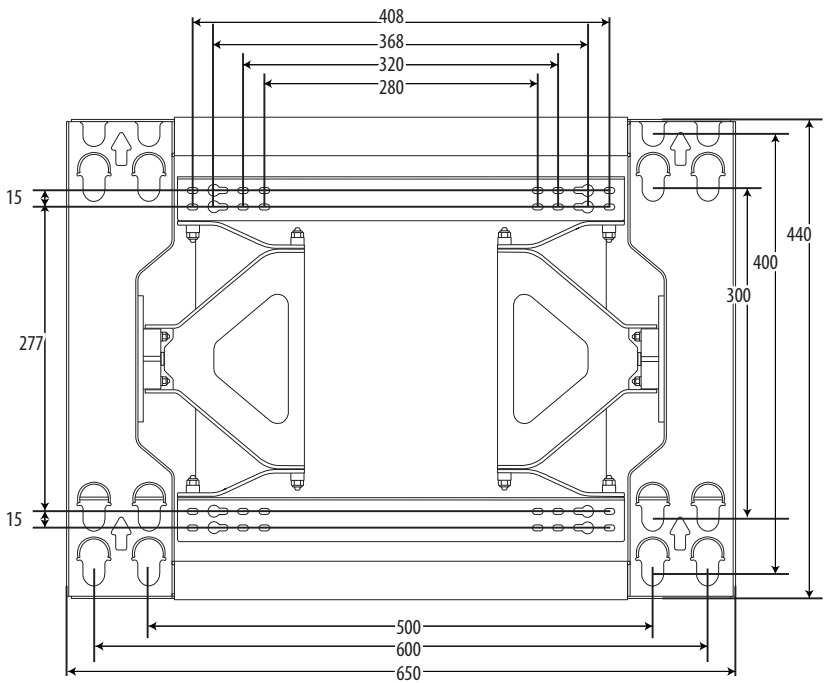

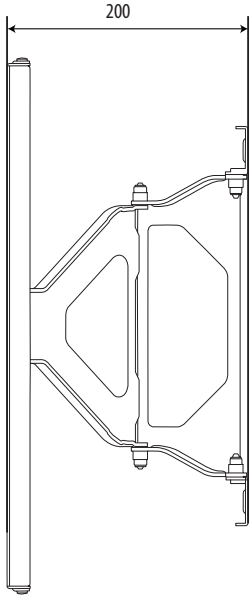

Model Name	WB24GDB	
Width	mm	650
Height	mm	440
Depth	mm	19
Product Weight	kg	6.0
Wall Mount VESA Specifications	600 x 400, 500 x 400	
Max. Tensile Load (kg)	kg	80