LG
Life's Good

LG Sound 360

Portable *Bluetooth*® Speaker

Please read this manual carefully before operating your set and retain it for future reference.

MODELS
NP7860W
NP7860P
NP7860U

MFL69396804

www.lg.com

Safety Information

CAUTION

RISK OF ELECTRIC SHOCK DO NOT OPEN

CAUTION: TO REDUCE THE RISK OF ELECTRIC SHOCK DO NOT REMOVE COVER (OR BACK) NO USER-SERVICEABLE PARTS INSIDE REFER SERVICING TO QUALIFIED SERVICE PERSONNEL.

This lightning flash with arrowhead symbol within an equilateral triangle is intended to alert the user to the presence of uninsulated dangerous voltage within the product's enclosure that may be of sufficient magnitude to constitute a risk of electric shock to persons.

The exclamation point within an equilateral triangle is intended to alert the user to the presence of important operating and maintenance (servicing) instructions in the literature accompanying the product.

WARNING: TO PREVENT FIRE OR ELECTRIC SHOCK HAZARD, DO NOT EXPOSE THIS PRODUCT TO RAIN OR MOISTURE.

WARNING: Do not install this equipment in a confined space such as a book case or similar unit.

CAUTION: Do not use high voltage products around this product. (ex. Electrical swatter) This product may malfunction due to electrical shock.

WARNING: This unit contains magnets which can be harmful to some kind of object (Ex : Magnetic card, Pacemaker etc..).

CAUTION: Do not block any ventilation openings. Install in accordance with the manufacturer's instructions.
Slots and openings in the cabinet are provided for ventilation and to ensure reliable operation of the product and to protect it from over heating. The openings shall be never be blocked by placing the product on a bed, sofa, rug or other similar surface. This product shall not be placed in a built-in installation such as a bookcase or rack unless proper ventilation is provided or the manufacturer's instruction has been adhered to.

CAUTION concerning the Power Cord

Most appliances recommend they be placed upon a dedicated circuit;

That is, a single outlet circuit which powers only that appliance and has no additional outlets or branch circuits. Check the specification page of this owner's manual to be certain. Do not overload wall outlets. Overloaded wall outlets, loose or damaged wall outlets, extension cords, frayed power cords, or damaged or cracked wire insulation are dangerous. Any of these conditions could result in electric shock or fire. Periodically examine the cord of your appliance, and if its appearance indicates damage or deterioration, unplug it, discontinue use of the appliance, and have the cord replaced with an exact replacement part by an authorized service centre. Protect the power cord from physical or mechanical abuse, such as being twisted, kinked, pinched, closed in a door, or walked upon. Pay particular attention to plugs, wall outlets, and the point where the cord exits the appliance. The Power Plug is the disconnecting device. In case of an emergency, the Power Plug must remain readily accessible.

CAUTION when using this product in environments of low humidity

- It may cause static electricity in environments of low humidity.
- It is recommended to use this product after touching any metal object which conducts electricity.

NOTICE: For safety marking information including product identification and supply ratings, please refer to the main label on the bottom or the other surface of the product.

This device is equipped with a portable battery or accumulator.

Safety way to remove the battery or the battery from the equipment: Remove the old battery or battery pack, follow the steps in reverse order than the assembly. To prevent contamination of the environment and bring on possible threat to human and animal health, the old battery or the battery put it in the appropriate container at designated collection points. Do not dispose of batteries or battery together with other waste. It is recommended that you use local, free reimbursement systems batteries and accumulators. The battery shall not be exposed to excessive heat such as sunshine, fire or the like.

CAUTION: The apparatus shall not be exposed to water (dripping or splashing) and no objects filled with liquids, such as vases, shall be placed on the apparatus.

Disposal of your old appliance

1. This crossed-out wheeled bin symbol indicates that waste electrical and electronic products (WEEE) should be disposed of separately from the municipal waste stream.
2. Old electrical products can contain hazardous substances so correct disposal of your old appliance will help prevent potential negative consequences for the environment and human health. Your old appliance may contain reusable parts that could be used to repair other products, and other valuable materials that can be recycled to conserve limited resources.
3. You can take your appliance either to the shop where you purchased the product, or contact your local government waste office for details of your nearest authorised WEEE collection point. For the most up to date information for your country please see www.lg.com/global/recycling

Disposal of waste batteries/accumulators

Pb

1. This symbol may be combined with chemical symbols for mercury (Hg), cadmium (Cd) or lead (Pb) if the battery contains more than 0.0005% of mercury, 0.002% of cadmium or 0.004% of lead.
2. All batteries/accumulators should be disposed separately from the municipal waste stream via designated collection facilities appointed by the government or the local authorities.
3. The correct disposal of your old batteries/accumulators will help to prevent potential negative consequences for the environment, animal and human health.
4. For more detailed information about disposal of your old batteries/accumulators, please contact your city office, waste disposal service or the shop where you purchased the product. (http://www.lg.com/global/sustainability/environment/take-back-recycling/global-network-europe)

Symbols

~	Refers to alternating current(AC).
⎓	Refers to direct current(DC).
⧈	Refers to class II equipment.
⏻	Refers to stand-by.
I	Refer to “ON” (power).
ϟ	Refers to dangerous voltage.

Removal of waste batteries and accumulators
(Product with embedded battery ONLY)

In case this product contains a battery incorporated within the product which cannot be readily removed by endusers, LG recommends that only qualified professionals remove the battery, either for replacement or for recycling at the end of this product's working life. To prevent damage to the product, and for their own safety, users should not attempt to remove the battery and should contact LG Service Helpline, or other independent service providers for advice. Removal of the battery will involve dismantling of the product case, disconnection of the electrical cables/ contacts, and careful extraction of the battery cell using specialized tools.
If you need the instructions for qualified professionals on how to remove the battery safely, please visit http://www.lge.com/global/sustainability/environment/take-back-recycling.

CAUTION: Internal lithium battery in the unit should not be replaced by user because of danger of explosion if battery is incorrectly replaced, and must be replaced with the same type battery by expert.

Declaration of Conformity

CE 0168

Hereby, LG Electronics European Shared Service Center B.V., declares that this Portable Bluetooth Speaker is compliant with the essential requirements and other relevant provisions of Directive 1999/5/EC. The complete Declaration of Conformity may be requested through the following postal address:

LG Electronics European Shared Service Center B.V.
European Standard Team
Krijgsman 1
1186 DM Amstelveen
The Netherlands

or can be requested at our dedicated DoC website:

http://www.lg.com/global/support/cedoc/cedoc#

This device is a 2.4 GHz wideband transmission system, intended for use in all EU member states and EFTA countries.

Table of Contents

1 Getting Started

2 Safety Information
6 Included in the Package
6 Description of Part

2 Operating

7 Charging the Unit
7 – Connecting the AC adapter
7 – Checking the Charging Status
7 Operations
7 – Power On/Off
8 – Simple Operation Guide
9 – Pairing
9 – NFC
10 – Advanced Multipoint
10 – Auto Reconnect
10 – Dual Play (Optional)
11 – Equalizer Mode Change
11 – Reset the Speaker Setting
11 – LG Sound Sync
11 When Using the Speaker
11 – BLUETOOTH®
12 – Dual Play
12 – LG Sound Sync
12 – Notice for Auto Power Off

3 Troubleshooting

13 Troubleshooting

4 Appendix

14 Trademarks and Licenses
14 Handling the Unit
15 Specifications

Included in the Package

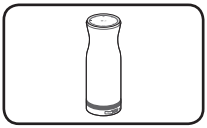

Bluetooth Speaker

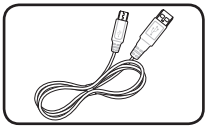

USB cable (1)

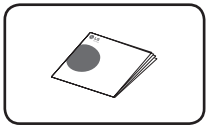

Simple Manual (1)

Note

Actual product design may differ from images shown in this manual.

Description of Part

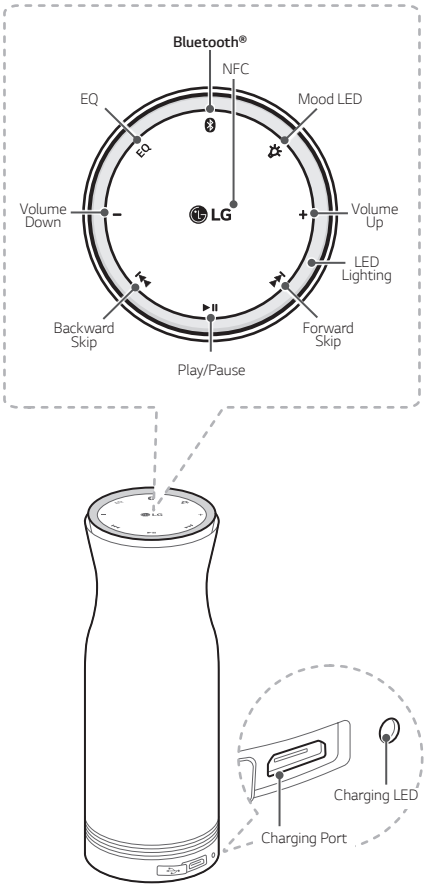

Charging the Unit

Connecting the AC adapter

1. Connect the USB adapter and USB charging cable.
2. Open the USB cover, then plug the USB charging cable (as shown below) into the speaker's charging port.
3. Plug the charger into an electrical outlet.

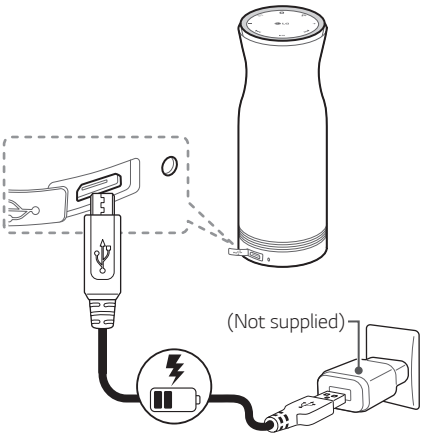

Note

- A low battery alert will play once per minute.
- If the battery is not charged, the speaker will be turned off.

Caution

AC adapter is not supplied.
It is recommended that you use the 5 V AC adapter approved by LG Electronics Inc. (more than 1.2 A) with this speaker because of danger of explosion. If you do not use the recommended adapter, charging is unavailable or charging time may differ.

Checking the Charging Status

When AC Adapter is connected, battery charging is started. When the speaker is turned on and unpaired, you can check the charging status by touching — button.

Blue light	Charged
Violet light	≧ 80 %
Red light	< 80 %

Operations

Power On/Off

Power on

Press the top of the speaker to turn the power on.

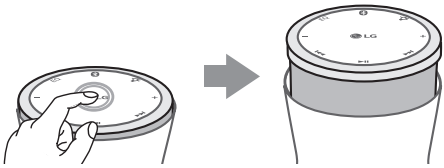

Power off

If you press the top of the speaker while it is turned on, the speaker will be turned off.

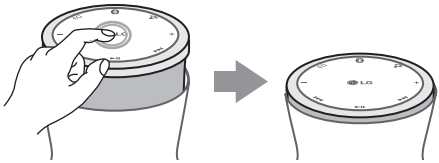

Simple Operation Guide

Function	How to
Play / Pause	Touch ⏯
Volume Up	Touch ⊕
Volume Down	Touch ⊖
Display Battery Status	Touch and hold ⊖
Forward Skip	Touch ⏭
Backward Skip	Touch ⏮
Equalization Mode Changes	Touch EQ
Enter Pairing Mode	Touch and hold ᛒ
Change the Mood LED light. (Blinking → Always On → Off)	Touch 💡
Dual Play Inquire (First Speaker)	Touch and hold ᛒ + ⊕
Change to Dual Play (Second Speaker)	Touch and hold ᛒ + ⊖
End Dual Play	Touch and hold ᛒ + ⊕ or ⊖
Connect with TV Sync	Touch and hold ᛒ + ⏯
Reset the Speaker	Touch and hold ᛒ + ⏭ + ⏮ (about 5 secs)

Note

- Use the touch buttons with clean and dry hands.
  - In a humid environment, wipe out any moisture on the touch buttons before using.
- Do not press the touch buttons hard to make it work.
  - If you apply too much strength, it can damage the sensor of the touch buttons.
- Touch the button that you want to work in order to operate the function correctly.
- Be careful not to have any conductive material such as metallic object on the touch buttons. It can cause malfunctions.

Pairing

To use the speaker, you must first pair it with your mobile device.

1. Turn on the speaker. The speaker enters pairing mode.
2. When the speaker enters pairing mode, LED light blinks fast.
3. When searching for this speaker with the **Bluetooth** device, a list of the devices found may appear in the **Bluetooth** device display depending on the type of **Bluetooth** device. The speaker appears as "LG Sound 360 (xx)".
4. Select "LG Sound 360 (xx)".

Note

- XX means the last two digits of **Bluetooth** address. For example, if your speaker has a **Bluetooth** address such as 9C:02:98:4A:F7:**08**, you will see "LG Sound 360 (**08**)" on your **Bluetooth** device.
- Depending on the **Bluetooth** device type, some devices have a different pairing way. Enter the PIN code (0000) as needed.

5. When the speaker is successfully connected to your **Bluetooth** device, the speaker beeps once and the LED light changes to slow blink.

Note

- When the speaker is turned on, it will automatically try to reconnect to the last device which has been paired with at least once.
- If the speaker cannot connect to a previously paired device in 20 minutes, it will be turned off automatically.

NFC

Bluetooth connection is available through NFC.

In order to use this feature, you need to activate NFC on your mobile device. (The Read/Write item should be checked on the NFC menu on your mobile device.)

1. Bring your mobile device close to the LG logo on the top of the speaker.

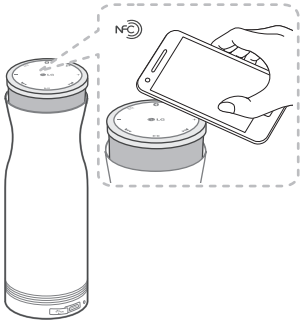

2. In your mobile device, confirm the message from the pop-up window to connect to the speaker.
3. When the speaker is successfully conncted to your mobile device, the speaker will beep.
4. If you bring your mobile device close to the LG logo(NFC) on the connected speaker again, the connection will be disconnected.

Advanced Multipoint

The speaker can be connected to two devices at the same time.

Pairing with Two Devices

1. Connect the speaker with one of the two **Bluetooth**-enabled mobile devices (Refer to the "Pairing".)
2. To add another **Bluetooth** mobile device, press and hold button for 2 seconds. Then, connect the speaker with **Bluetooth** activated mobile device.
3. When multi-pairing is completed, play music of one **Bluetooth** mobile device you want.

Note

- When the speaker is connected to two mobile devices at the same time (Multipoint), the speaker will work with the primary mobile device.
- If the speaker fails to connect to the primary mobile device through Easy Pairing, it will enter Pairing mode.

Auto Reconnect

If in range of each other when the speaker is turned on, the speaker and the primary mobile device will reconnect automatically.

The secondary mobile device will need to be connected manually from the available devices listed in the **Bluetooth** menu.

Note

If the speaker and paired mobile device do not reconnect automatically, touch button on the speaker to reconnect manually.

Dual Play (Optional)

You can enjoy stereo sound using two speakers.

1. Pair your mobile device with the first speaker A (refer to the pairing instructions).

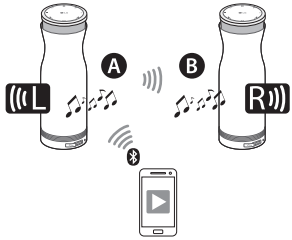

2. Touch button and — button on speaker B at the same time for about 2 seconds.

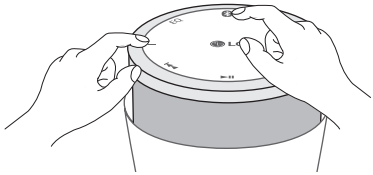

3. Touch button and + button on speaker A at the same time for about 2 seconds.

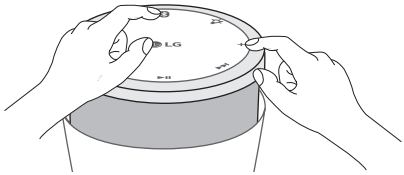

4. When the speaker is successfully connected, the speaker beeps once and the LED light changes to slow blink twice. If the speakers fail to detect, go to step 1 and try again.

Equalizer Mode Change

Speaker has three types of preset Equalizer mode.

Briefly touch EQ button on the speaker. When you touch EQ button, the EQ settings will be applied in the order as below:

EQ Mode	LED Blinking
Bass Boost Mode (Low-Band Boost, Default)	1
Treble Boost (High-Band Boost)	2
Power Boost Mode (Full-Band Boost)	3

Reset the Speaker Setting

You can reset speaker settings such as the paired device list, volume level, equalizer mode, and mood LED to default.

1. Touch and hold ✱, ▶▶I and I◀◀ button at the same time for about 5 seconds.
2. When It is done, the LED light blinks twice.

LG Sound Sync

Sound Sync Wireless

LG Sound Sync enables you to control some functions of this speaker by your LG TV remote control. Make sure that your TV has LG Sound Sync logo as shown above.

1. Set up the sound output of your TV.
   TV setting menu ➡ [Sound] ➡ [TV Sound output] ➡ [LG Sound Sync (Wireless)]

Note

The setting method of LG Sound Sync may differ depending on the TV. Refer to your TV manual.

2. Touch ✱ button and ▶II button at the same time.

When Using the Speaker

BLUETOOTH®

- When using **Bluetooth** technology, you have to make a connection between the speaker and the **Bluetooth** device as close as possible and keep the distance.
  However you may experience issues in the cases below :
  - There is a obstacle between the speaker and the **Bluetooth** device.
  - There is a device using same frequency with **Bluetooth** technology such as a medical equipment, a microwave or a wireless LAN device.
- Even if this speaker is connected up to two **Bluetooth** devices, you can play and control music by selecting one of the connected devices.
- Removable/detachable **Bluetooth** device (Ex : Dongle etc..) doesn't support multi pairing.
- Multi-pairing connection (Advanced Multipoint) is only available with Android™ or iOS devices. (Multi-pairing connection may not be available with some devices due to their specifications.)
- When two mobile devices are connected to a speaker, each mobile device operates volume level independently.
- The sound may be interrupted when the connection interfered by the other electronic wave.
- Depending on the type of the device, you may not be able to use the **Bluetooth** fuction.
- The more distance between the speaker and the **Bluetooth** device, the lower sound quality becomes.
- **Bluetooth** connection will be disconnected when the speaker is turned off of the **Bluetooth** device gets too far from the speaker.

Dual Play

- When two speakers operate as Dual Play, the volume is adjusted at the same time.
- If one of the speakers is turned off, the another one is also turned off automatically.
- To disable Dual Play connection, touch and hold button and + button (or — button) at the same time.
- Dual Play is supported on Android or IOS devices.
- During Dual Play, you can only connect your mobile device to one of the **Bluetooth** speakers (speaker A or speaker B).
- Dual Play is only available with the same kind of this speaker for use with Android and iOS devices. Dual Play is not available on other Music Flow series or other smart audio products.
- Multi-pairing (Advanced Multipoint) is not available during Dual Play.
- When Dual Play connection is on processing, the function cannot be changed without first disconnecting from the paired mobile device. Once disconnected, another mobile device can be paired with the speaker.
- While Dual Play mode, the speakers will not be visible on other **Bluetooth**-enabled mobile devices.
- We recommend that the speakers should be connected each other first to enjoy Dual Play, then pair with a device such as a **Bluetooth**-enabled mobile or a TV.

LG Sound Sync

- When the connection fails, make sure of the condition of the TV and power.
- Make sure of the condition of this speaker and the connection in the cases below when using LG Sound Sync.
  - Turn off the speaker.
  - Changing the function to the others.
  - Disconnecting the connection caused by interference or a distance.

Notice for Auto Power Off

- If the speaker is not connected to any **Bluetooth** device in 20 minutes, it will be turned off automatically.
- When the speaker is turned off automatically, you need to press the top of the speaker twice (once to complete the power off and a second time to turn the power on)

Troubleshooting

Problem	Cause & Correction
No Power	• The battery is discharged. Charge the battery.
No sound or sound distortion	• The volume of this speaker or smart device may be set up to minimum. Adjust the volume of this speaker or the smart device which is paired with the speaker. • If the volume of the paired device is set up to maximum, the sound may be distorted. Reduce the volume of the paired device. • If you use this speaker for purposes other than playing music, it may not work properly or the sound quality may decrease.
Bluetooth Pairing Failed	**Bluetooth** pairing may not work properly depending on the types of **Bluetooth** devices or environments. • Ensure **Bluetooth** is on. • Deactivate **Bluetooth** on the **Bluetooth**-enabled device you are trying to pair with, and then reactivate **Bluetooth** to try to pair again. • Remove obstacles between this speaker and the **Bluetooth**-enabled device you are trying to pair with. • Ensure that the device you want to pair with has been already paired with another **Bluetooth**-enabled device. If it is, disable the unwanted connection.
LG Sound Sync Failed	• If the connection fails, check this speaker and your TV for their power and modes. • If you turn off the TV and turn it on again, you will need to set up the LG sound sync connection again.
Speaker Not Properly Working	• If this speaker works improperly, power it off and then back on again. • If the battery has been completely discharged, **Bluetooth** information may be deleted. Always maintain a charge to better ensure **Bluetooth** information is saved. • When this speaker's power is off, the previous settings/mode may not be saved. Reconnect settings/mode using the instructions for this speaker. • Do not use this speaker where temperature and humidity are too high or too low. • Please contact LG Electronics Customer Service Center if you are still having issues with this speaker.

Trademarks and Licenses

Bluetooth wireless technology is a system which allows radio contact between electronic devices.

Connecting individual devices under **Bluetooth** wireless technology does not incur any charges. A mobile phone with **Bluetooth** wireless technology can be operated via the Cascade if the connection was made via **Bluetooth** wireless technology.

The **Bluetooth** word mark and logos are owned by the Bluetooth SIG, Inc. and any use of such marks by LG Electronics is under license.

Other trademarks and trade names are those of their respective owners.

Handling the Unit

When shipping the unit

Please save the original shipping carton and packing materials. If you need to ship the unit, for maximum protection, re-pack the unit as it was originally packed at the factory.

Keeping the exterior surfaces clean

- Do not use volatile liquids such as insecticide spray near the unit.
- Wiping with strong pressure may damage the surface.
- Do not leave rubber or plastic products in contact with the unit for a long period of time.

Cleaning the unit

To clean the player, use a soft, dry cloth. If the surfaces are extremely dirty, use a soft cloth lightly moistened with a mild detergent solution. Do not use strong solvents such as alcohol, benzine, or thinner, as these might damage the surface of the unit.

Specifications

General	
Power requirements	5 V ⎓ 1.2 A (AC Adapter) Built-in rechargeable battery
Power consumption	6 W
Dimensions	Ø 67 mm x 204 mm
Net Weight (Approx.)	0.6 kg
Operating temperature	5 °C to 35 °C
Operating humidity	5 % to 60 %
Communication	**Bluetooth** 4.1

External Connector	
USB	Micro USB port for charging battery

Speaker	
Type	Built-in
Impedance Rated	Woofer 4 Ω, full range 8 Ω
Rated Input Power	12 W

Battery	
Battery capacity	5200 mAh
Operating time	Approx. 20 hours. Based on 30% volume, 1 kHz signal with a fully charged battery
Charging time	Less than 5.5 hours. The operating time can be varied depending on the conditions of the battery or operation.

- Product designs and specifications are subject to change without prior notice.
- As this wireless device may cause electromagnetic interference, safety or medical services will not be provided.

Technology with the human touch

GUARANTEE

- LG Electronics U.K. Ltd. will provide the following services in order to expedite this Guarantee.

1. All faulty components which fail due to defective manufacture will be replaced free of charge for a period of 12 months from the original date of purchase.
2. The dealer (or his service agent) who sold the product will be reimbursed for any labour provided in the repair of this LG equipment, for a period of 12 months from the original date of purchase. These claims must be made in accordance with the published scale of service charges and relevant claims procedure.

PLEASE NOTE:

A. The dealer may restrict the guarantee to the original purchaser.

B. The dealer is not obliged to carry out service under guarantee if unauthorized modifications are made to the apparatus, or if non standard components are used or if the serial number of the apparatus is removed, defaced, misused, or altered.

C. Any claims made under guarantee must be directed to the dealer from whom the equipment was originally purchased. The dealer may, before carrying out service under guarantee, require a receipted account as evidence of the date of purchase.

D. We respectfully point out that your dealer is not obligated to replace batteries if they become exhausted or worn in use.

E. Aerial alignment and consumer control adjustments are not covered by this guarantee.

This guarantee does not affect your statutory rights.

- REQUIREMENTS TO MAINTAIN WARRANTY COVERAGE:
  RETAIN YOUR RECEIPT TO PROVE DATE OF PURCHASE. A COPY OF YOUR RECEIPT MUST BE SURRENDERED AT THE TIME GUARANTEE SERVICE IS PROVED.
- Product Registration Card :
  It is helpful to complete at least your name, address, phone, model & serial numbers and return it. This will enable LG to assist you in the future should you lose your receipt, your units be stolen, or should modifications be necessary.
- To obtain information or assistance:
  Call UK: 0344 847 5454 IE: 01 686 9454

MODEL NO.*	SERIAL NO.*	DATE OF PURCHASE.*

In all cases of difficulty - consult your LG dealer from whom the product was purchased

LGEUK Website : www.lg.com/uk
(Service website : www.lg.com/uk/support)

LG

Life's Good