Additional Information

Specifications

Power Requirements	Refer to the main label on the unit.
Power Consumption	Refer to the main label on the unit.
Dimensions (W x H x D)	Approx. 350.0 mm x 163.0 mm x 251.0 mm
Bus Power Supply (USB)	5 V ⎓ 500 mA
Amplifier (Total RMS output power)	950 W RMS

Design and specifications are subject to change without notice.

Replacement of battery

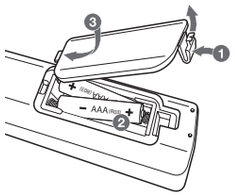

Note

- Do not look directly at the light emitting part when the LIGHTING is turned on.
- If the illumination brightness is glaring, switch on the room lights or turn off the LIGHTING of the unit.

ENGLISH

Only for PV

SIMPLE MANUAL

Mini Hi-Fi System

Please read this manual carefully before operating your set and retain it for future reference.
To view the instructions of advanced features, visit http://www.lg.com and then download Owner's Manual. Some of the content in this manual may differ from your unit.

MODEL

CL65

This product has no disc drive.

COV32335701
2407_Rev01

www.lg.com

Copyright © 2026 LG Electronics Inc. All Rights Reserved.

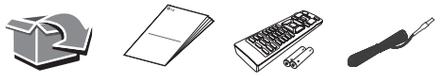

Front Panel

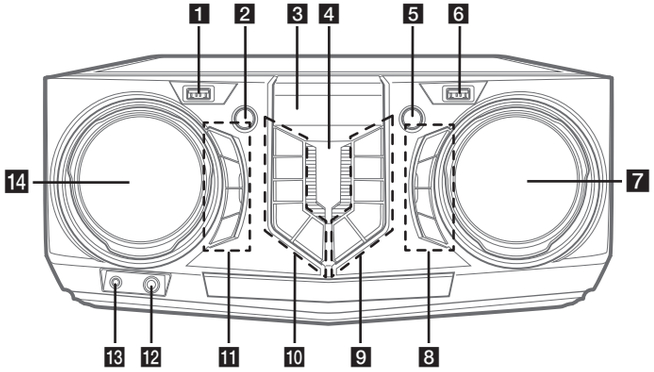

1 USB 1 Port
You can play sound files by connecting the USB device.

2 ⏻ (Standby)
Turns the power on or off.

3 Display window

4 (Remote sensor)

5 **TWIN**
Connects two speakers for TWIN mode in WIRELESS PARTY LINK.

6 USB 2 Port
You can play sound files by connecting the USB device.

7 **VOLUME**
- Adjust speaker volume.
- Adjusts microphone volume.

8 **MIC VOL** (Microphone volume)
Selects microphone volume mode.

MIC (Microphone) **ECHO**
Selects ECHO mode.

VOICE CANCELLER
You can reduce the vocal tones during music playback from various input sources.

VOCAL EFFECTS
Selects various vocal effects mode.

9 **F** (Function)
Selects the function and input source.

⏯ (Play/Pause)
- Starts or pauses playback.
- Selects stereo/mono.

⏭ (Skip/Search)
- Skips forward.
- Searches for a section within a file.
- Selects the radio stations.

KEY CHANGER (#/♭)
Changes the key to suit your vocal range.

10 **USB REC / DEMO**
- Records to USB.
- Stops Recording.
- In power off status, if you press **USB REC / DEMO**, show DEMO mode.

□ (Stop)
Stops playback or cancels DELETE function.

⏮ (Skip/Search)
- Skips backward.
- Searches for a section within a file.
- Selects the radio stations.

ⓘ (Information)
- Sees information about your music. An MP3 file often come with ID3 tag. The tag gives the Title, Artist, Album or Time information.
- Sees **Bluetooth** device name of the unit in BT READY.
- Sees the name of connected all **Bluetooth** device in **Bluetooth** mode.
- When these units are successfully connected each other in WIRELESS PARTY LINK mode, each of connected device names appears in the each unit.

AUTO DJ
Selects the AUTO DJ mode.

11 **LIGHTING**
Selects the lighting mode.

SPECIAL EQ / BASS BLAST (or BASS BLAST+)
- Chooses special equalizer.
- Press and hold to select BASS (or BASS+) effect directly.

SEARCH
Moves to folder or file in selection mode.

OK
Selects a folder when searching a file.

12 **MIC** (Microphone) jack

13 **AUX IN 1** jack

14 **EQUALIZER / SEARCH & MULTI**
- Chooses sound impressions.
- Searches a folder or a file.
- Selects the lighting effects.

Rear Panel

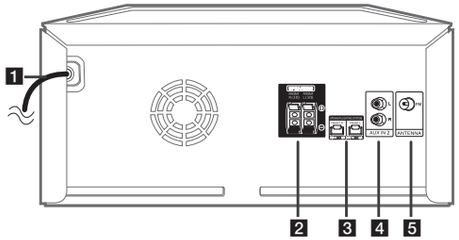

1 Power cord

2 **SPEAKERS** terminals

3 **SPEAKER LIGHTING SYSTEM**
Connect the speaker lighting cables.

4 **AUX IN 2** (L/R)
Connect an auxiliary device.

5 **ANTENNA** (FM)

Speaker Connection

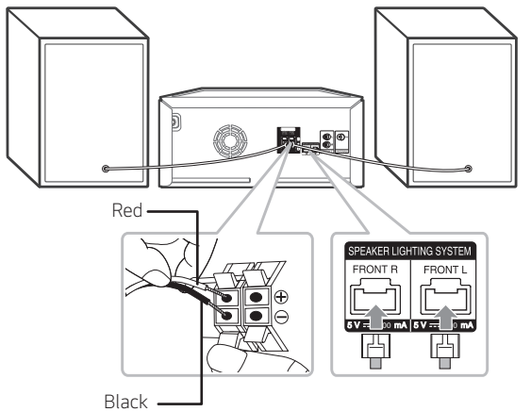

Controller App

Download the **LG XBOOM** App to your device. (Android only)

LG Sound Sync (Wireless)

For more information, download the online owner's manual. **http://www.lg.com**