OWNER'S MANUAL

LG UltraFine™ COMPUTER MONITOR 5K

(LED Computer Monitor*) (For Mac)

* Disclaimer : LG LED Monitor applies LCD screen with LED backlights.
This product is a computer monitor and not for television purpose.

Please read this manual carefully before operating your set and retain it for future reference.

27MD5KL

www.lg.com

Copyright © 2019 LG Electronics Inc. All Rights Reserved.

CONTENTS

LICENSE ---------- 2

IMPORTANT PRECAUTIONS ---------- 3

OPEN SOURCE SOFTWARE NOTICE INFORMATION --- 6

ASSEMBLING AND PREPARING ---------- 6

MAKING CONNECTIONS ----------23

TROUBLESHOOTING ----------26

PRODUCT SPECIFICATION ----------28

ENGLISH

LICENSE

Each model has different licenses. Visit *www.lg.com* for more information on the license.

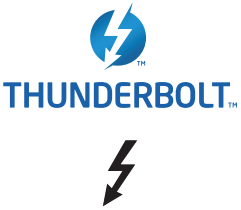

Thunderbolt and the Thunderbolt logo are trademarks of Intel Corporation or its subsidiaries in the U.S. and/or other countries.



Mac and the Mac logo are trademarks of Apple Inc., registered in the U.S. and other countries.

* USB Type-C™ and USB-C™ are trademarks of USB Implementers Forum.

IMPORTANT PRECAUTIONS

This unit has been engineered and manufactured to ensure your personal safety, however improper use may result in potential electrical shock or fire hazards. In order to allow the proper operation of all safeguards incorporated in this display, observe the following basic rules for its installation, use, and servicing.

On Safety

Use only the power cord supplied with the unit. In case you use another power cord, make sure that it is certified by the applicable national standards if not being provided by the supplier. If the power cable is faulty in any way, please contact the manufacturer or the nearest authorized repair service provider for a replacement.

The appliance coupler is used as the disconnect device.

Please make sure the device is installed near the wall outlet to which it is connected and that the outlet is easily accessible.

Operate the display only from a power source indicated in the specifications of this manual or listed on the display. If you are not sure what type of power supply you have in your home, consult with your dealer.

Overloaded AC outlets and extension cords are dangerous. So are frayed power cords and broken plugs. They may result in a shock or fire hazard. Call your service technician for replacement.

As long as this unit is connected to the AC wall outlet, it is not disconnected from the AC power source even if the unit is turned off.

Do not Open the Display:

- There are no user serviceable components inside.
- There are Dangerous High Voltages inside, even when the power is OFF.
- Contact your dealer if the display is not operating properly.

To Avoid Personal Injury :

- Do not place the display on a sloping shelf unless properly secured.
- Use only a stand recommended by the manufacturer.
- Do not drop an object on or apply impact to the product. Do not throw any toys or objects on the product screen.

  It can cause injury to human, problem to product and damage the display.

To Prevent Fire or Hazards:

- Always turn the display OFF if you leave the room for more than a short period of time. Never leave the display ON when leaving the house.
- Keep children from dropping or pushing objects into the display's cabinet openings. Some internal parts carry hazardous voltages.
- Do not add accessories that have not been designed for this display.
- When the display is to be left unattended for an extended period of time, unplug it from the wall outlet.
- In the presence of thunder and lightning, never touch the power cord and signal cable because it can be very dangerous. It can cause electric shock.

On Installation

Do not allow anything to rest upon or roll over the power cord, and do not place the display where the power cord is subject to damage.

Do not use this display near water such as near a bathtub, washbowl, kitchen sink, laundry tub, in a wet basement, or near a swimming pool.

Displays are provided with ventilation openings in the cabinet to allow the release of heat generated during operation. If these openings are blocked, built-up heat can cause failures which may result in a fire hazard. Therefore, NEVER:

- Block the bottom ventilation slots by placing the display on a bed, sofa, rug, etc.
- Place the display in a built-in enclosure unless proper ventilation is provided.
- Cover the openings with cloth or other material.
- Place the display near or over a radiator or heat source.

Do not rub or strike the Active Matrix LCD with anything hard as this may scratch, mar, or damage the Active Matrix LCD permanently.

Do not press the LCD screen with your finger for a long time as this may cause some afterimages.

Some dot defects may appear as Red, Green or Blue spots on the screen.

However, this will have no impact or effect on the display performance.

If possible, use the recommended resolution to obtain the best image quality for your LCD display. If used under any mode except the recommended resolution, some scaled or processed images may appear on the screen. However, this is characteristic of the fixed-resolution LCD panel.

Displaying a still image for long time on the monitor may leave persistent image or stain on the monitor screen. To avoid this problem, use a screen saver and power off when this product is not used. Persistent image or stain caused by long time usage are not covered by the warranty on this product.

Do not shock or scratch the front and sides of the screen with metallic objects.

Otherwise, it may cause damage to the screen.

Make sure the panel faces forward and hold it with both hands to move. If you drop the product, the damaged product can cause electric shock or fire. Contact an authorized the service center for repair.

Avoid high temperatures and humidity.

Do not install this product on a wall if it could be exposed to oil or oil mist.

- This may damage the product and cause it to fall.

For displays with glossy bezels the user should consider the placement of the display as the bezel may cause disturbing reflections from surrounding light and bright surfaces.

Do not use products using high voltage around the Monitor. (ex. Electrical Swatter)

- Monitor may have malfunction as its electrical shock.

Precautions to the AC Adapter and Power

If water or any foreign substance goes inside the product (TV, monitor, power cord, or AC adapter), disconnect the power cord immediately and contact the service center.

- Otherwise, this may cause a fire or electric shock due to damage to the product.

Do not touch the power plug or AC adapter with wet hands. If the pins of the plug are wet or dusty, wipe and dry them before use.

- Otherwise, this may cause a fire or electric shock.

Make sure to completely insert the power cord into the AC adapter.

- If loosely connected, the poor connection may cause a fire or electric shock.

Be sure to use power cords and AC adapters provided or approved by LG Electronics, Inc.

- The use of non-approved products may cause a fire or electric shock.

When unplugging the power cord, always pull it by the plug. Do not bend the power cord with excessive force.

- The power line can be damaged, which may cause electric shock or fire.

Be careful not to step or place heavy objects (electronic appliances, clothing, etc.) on the power cord or AC adapter. Be careful not to damage the power cord or AC adapter with sharp objects.

- Damaged power cords may cause a fire or electric shock.

Never disassemble, repair or modify the power cord or AC adapter.

- This may cause a fire or electric shock.

Be sure to keep the outlet, AC adapter, and pins of the power plug clean from dust and etc.

- This may cause a fire.

On Cleaning

- Unplug the display before cleaning the face of the display screen.
- Use a slightly damp (not wet) cloth. Do not use an aerosol directly on the display screen because over-spraying may cause electrical shock.
- When cleaning the product, unplug the power cord and scrub gently with a soft cloth to prevent scratching. Do not clean with a wet cloth or spray water or other liquids directly onto the product. An electric shock may occur. (Do not use chemicals such as benzene, paint thinners or alcohol)
- Spray water onto a soft cloth 2 to 4 times, and use it to clean the front frame; wipe in one direction only. Too much moisture may cause staining.

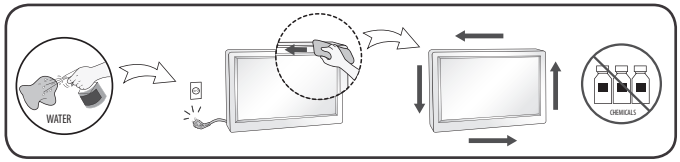

On Repacking

- Do not throw away the carton and packing materials. They make an ideal container in which to transport the unit. When shipping the unit to another location, repack it in its original material.

OPEN SOURCE SOFTWARE NOTICE INFORMATION

To obtain the source code under GPL, LGPL, MPL, and other open source licenses, that is contained in this product, please visit *http://opensource.lge.com*.

In addition to the source code, all referred license terms, warranty disclaimers and copyright notices are available for download.

LG Electronics will also provide open source code to you on CD-ROM for a charge covering the cost of performing such distribution (such as the cost of media, shipping, and handling) upon email request to *opensource@lge.com*.

This offer is valid for a period of three years after our last shipment of this product. This offer is valid to anyone in receipt of this information.

ASSEMBLING AND PREPARING

⚠ CAUTION

- Always use genuine LG components to ensure safety and product performance.
- The product warranty will not cover damage or injury caused by the use of unauthorized components.
- It is recommended to use the supplied components.

NOTE

- Without prior notice, all product information and specifications contained in this manual are subject to change to improve the performance of the product.
- To purchase optional accessories, visit an electronics store or an online shopping site, or contact the retailer from which you purchased the product.
- The power cord provided may differ depending upon the region.

Supported Software

Check the software supported by your product.

Software	Installation Priority	27MD5KL
LG Screen Manager	Recommended	O

- LG Screen Manager is an application that provides monitor software update feature.
- You can download and install the latest version from the Apple App Store.

Product Description

Front

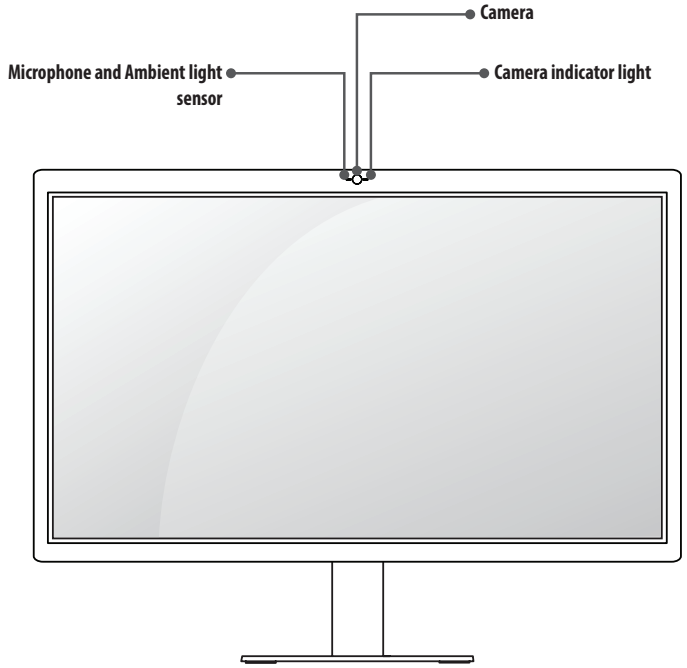

Back

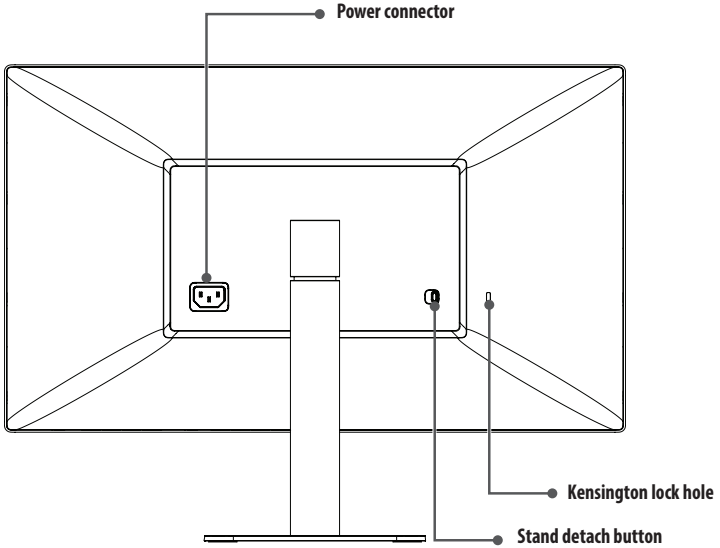

NOTE

- The ambient light sensor is for auto brightness control of display and can be controlled by Mac OS.

Input Connector

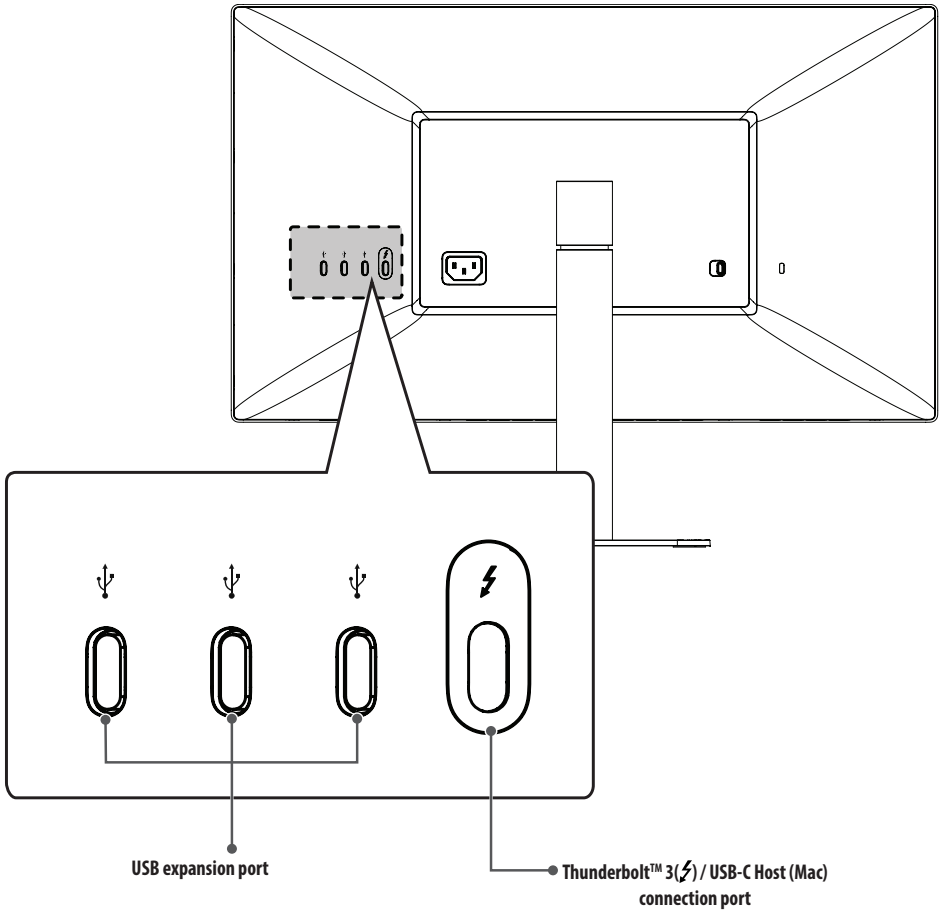

ID Label / Sub ID Label

You can view the monitor's ID Label and Sub ID Label.

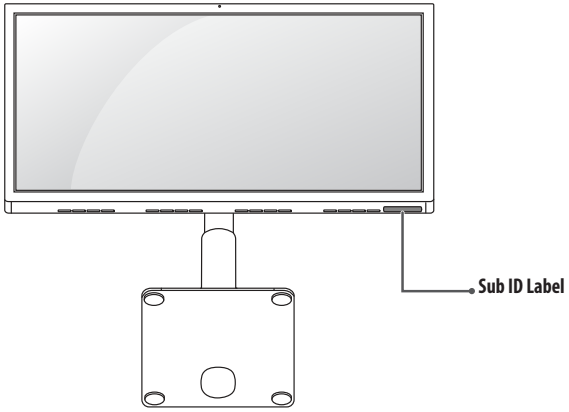

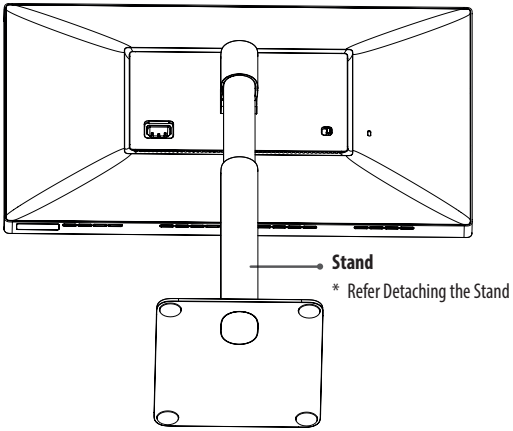

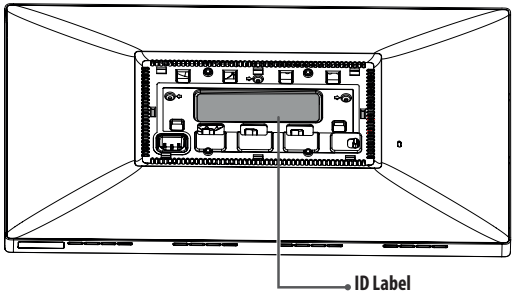

NOTE

- ID Label: the monitor's standard ID label that states model name, production date, country of production, specifications, etc.
  Sub ID Label: a secondary ID label that states only the model name and basic specifications.

CAUTION

- To view the ID Label, you must detach the stand.

Moving and Lifting the Monitor

When moving or lifting the monitor, follow these instructions to prevent the monitor from being scratched or damaged and to ensure safe transportation, regardless of its shape or size.

- Place the monitor in the original box or packing material before attempting to move it.
- Before moving or lifting the monitor, disconnect the power cord and all other cables.
- Hold the bottom and side of the monitor frame firmly. Do not hold the panel itself.
- When holding the monitor, the screen should face away from you to prevent it from being scratched.
- When transporting the monitor, do not expose the monitor to shock or excessive vibration.
- When moving the monitor, keep it upright and never turn the monitor on its side or tilt it sideways.

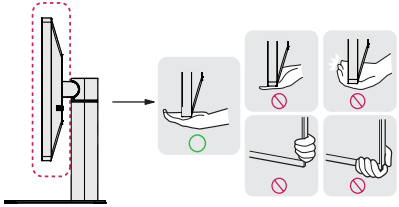

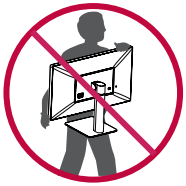

⚠ CAUTION

- Avoid touching the monitor screen as much as possible.
  - This may result in damage to the screen or some of the pixels used to create images.
- If you use the monitor panel without the stand base, its button may cause the monitor to become unstable and fall, resulting in damage to the monitor or human injury. In addition, this may cause the button to malfunction.

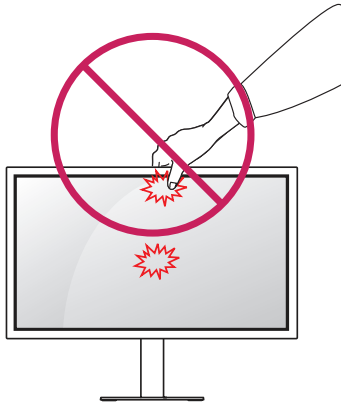

Installing on a Table

1 Lift the monitor and place it on the table in an upright position. Place the monitor at least 100 mm away from the wall to ensure sufficient ventilation.

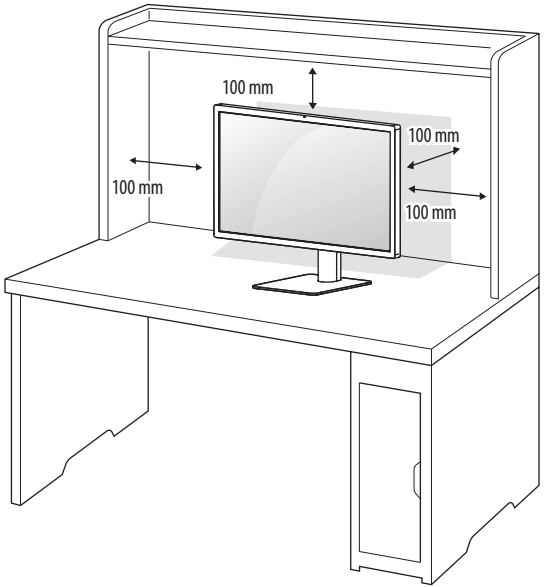

2 Connect the power cord to the monitor and then plug the power cord into the wall outlet.

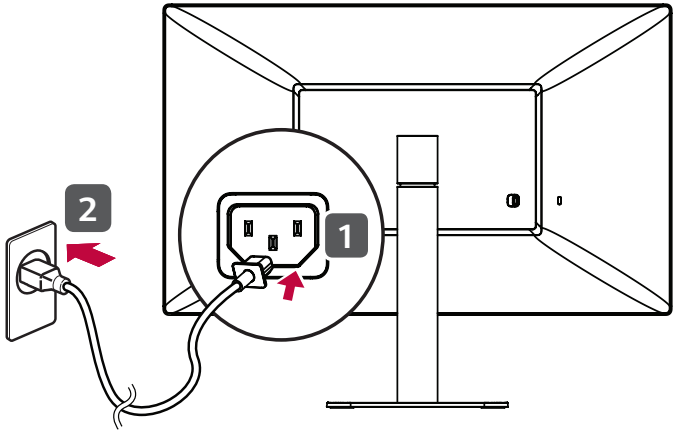

⚠ CAUTION

- Unplug the power cord before moving or installing the monitor. There is risk of electric shock.

Cautions When Connecting Power Cord

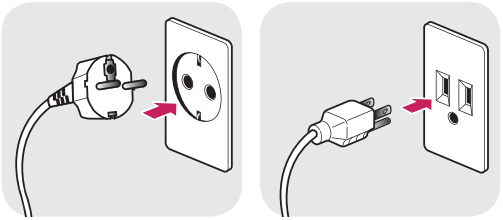

100-240 V ~

- Make sure to use the power cord that is provided in the product package and connect it to a grounded power outlet.
- If you need another power cord, please contact your local dealer or the nearest retail store.

Adjusting the Stand Height

1 Place the monitor mounted on the stand base in an upright position.
2 Handle the monitor with both hands for safety.

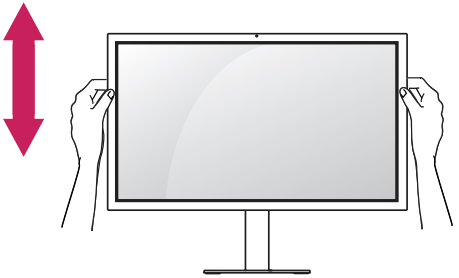

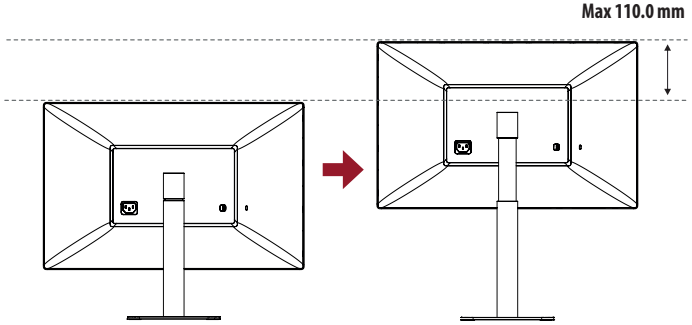

WARNING

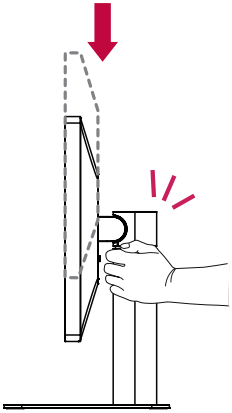

- When adjusting the screen height, do not place your hand on the stand body to avoid injury to your fingers.

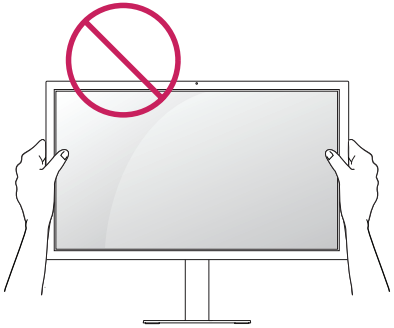

- Be careful not to touch or press the screen area when adjusting the angle of the monitor.

NOTE

- The left or right side of the monitor head can be slightly rotated up or down. Adjust the horizontal level of the monitor head.

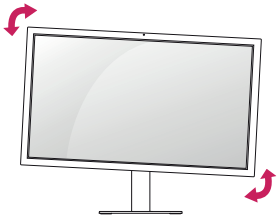

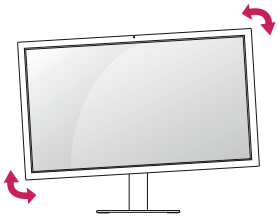

Adjusting the Angle

1 Place the monitor in an upright position, mounted on the stand base.
2 Adjust the angle of the screen. The angle of the screen can be adjusted forwards or backwards for a comfortable viewing experience.

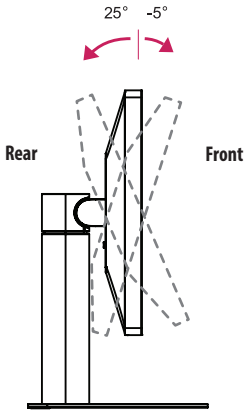

WARNING

- To avoid injury to the fingers when adjusting the screen, do not hold the lower part of the monitor's frame as illustrated below.

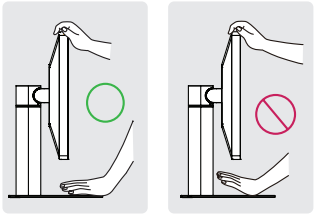

Using the Kensington Lock

The connector for the Kensington security system is located at the back of the monitor.

For more information on installation and usage, refer to the Kensington lock owner's manual or visit the website at *http://www.kensington.com*.

Connect the monitor to a table using the Kensington security system cable.

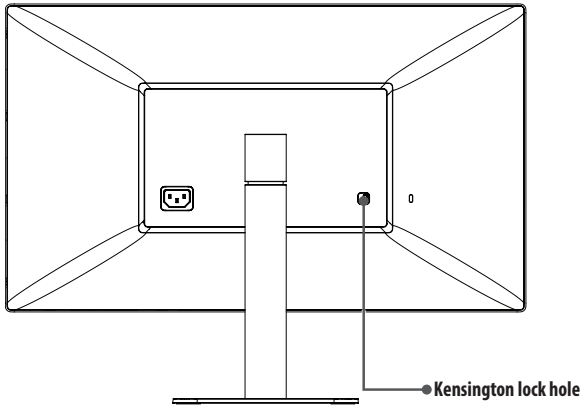

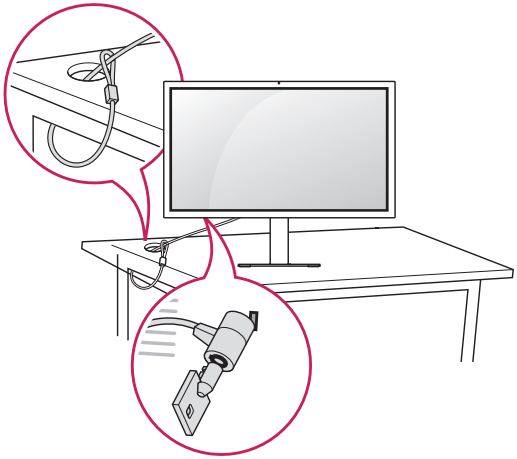

NOTE

- The Kensington security system is optional. You can obtain optional accessories from most electronics stores.

Detaching the Stand

1 Place the monitor's screen face down. To protect the screen from scratches, cover the surface with a soft cloth.

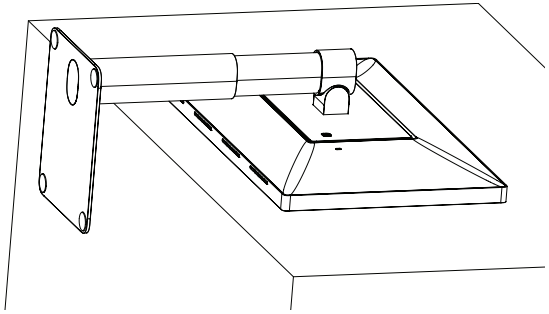

2 Push the Detach button on the back of the monitor to the left.

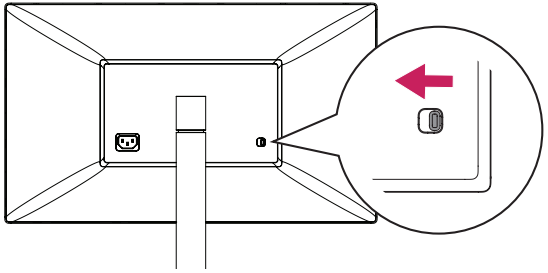

3 Lift up the stand, slightly rotating it.

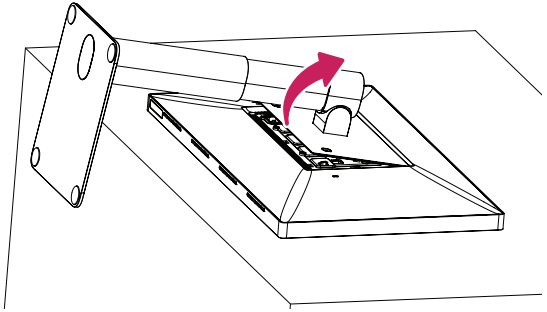

4 Pull the stand away from the monitor in its rotated position.

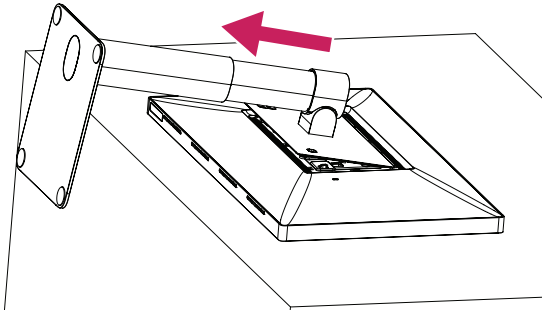

5 Check whether the hooks on the stand are separated from the slots of the main unit.

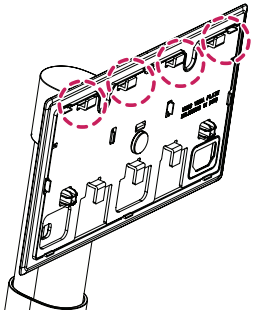

Stand hooks

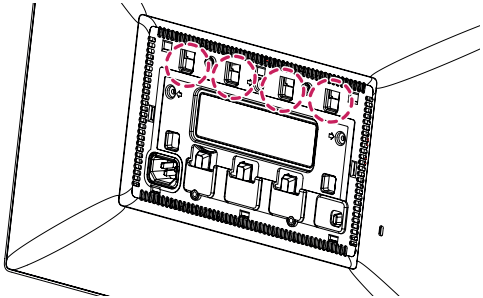

Main unit slots

6 Remove the stand once the hooks on the stand have been released from the slots of the main unit.

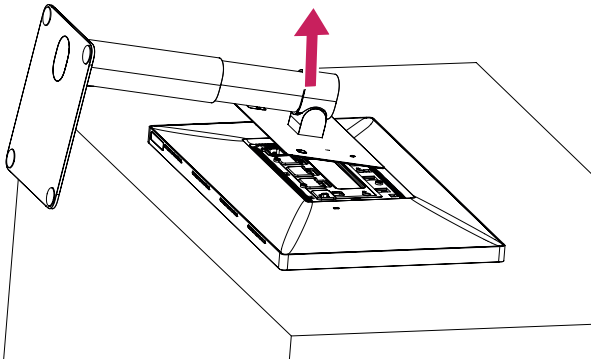

⚠ CAUTION

- Be careful not to drop the stand while detaching it.

Attaching the VESA design cover

1 Place the monitor's screen face down. To protect the screen from scratches, cover the surface with a soft cloth.

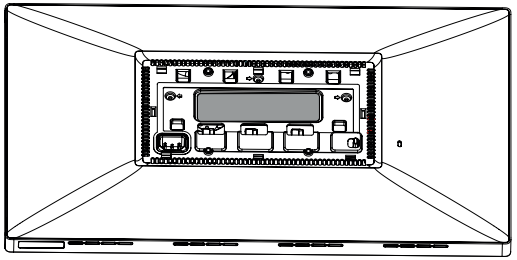

2 Place the VESA design cover on the monitor in a slightly slanted position so its hooks can be inserted to the slots of the main unit.

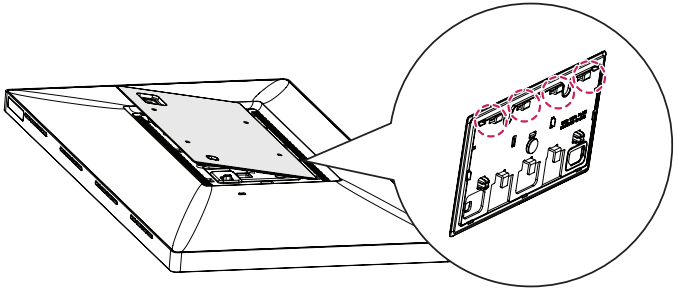

3 Push the VESA design cover in the slanted position until it touches the other side.

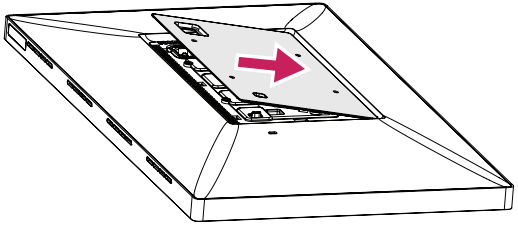

4 Push down on the VESA design cover.

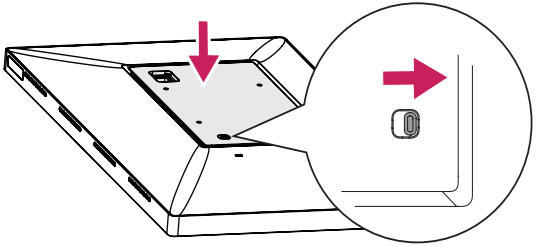

⚠ CAUTION

- Check whether the detach button has been pushed to the right after attaching the VESA design cover. If the button has not been pushed to the right, push it into position with your hands.

Installing the Wall Mount Bracket

1 Place the monitor's screen face down. To protect the screen from scratches, cover the surface with a soft cloth.

2 Use four screws to attach the wall mount bracket. (Standard screws: M4 x L10)

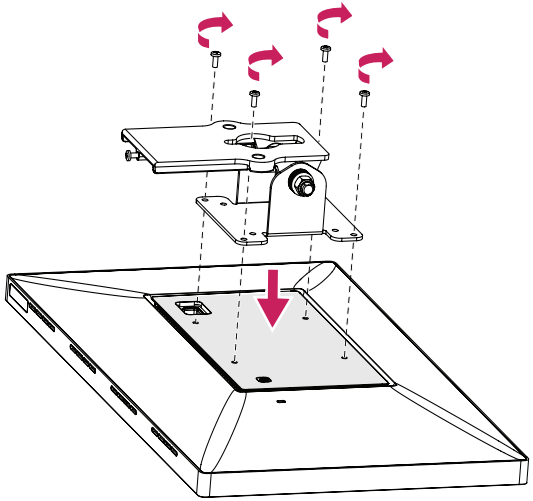

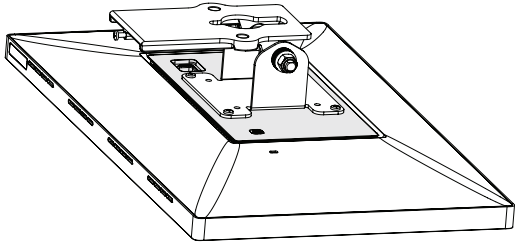

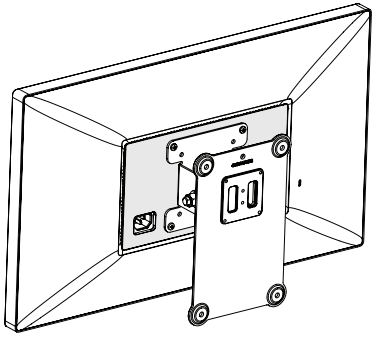

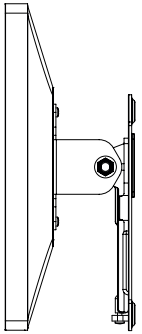

NOTE

- Install the monitor at least 100 mm away from the wall on each side of the monitor to ensure sufficient ventilation.
- The wall mount bracket and the wall mount bracket screws are not included.

⚠ CAUTION

- Be sure to attach the VESA design cover before attaching the wall mount bracket.
- If you use screws longer than the standard length, it may damage the inside of the product.
- To prevent injury, this apparatus must be securely attached to the wall in accordance with the installation instructions.

Wall Mount (mm)	100 x 100
Standard screw	M4 x L10
Number of screws	4
Wall Mount Plate (Optional)	RW120 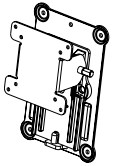

NOTE

- Vertical orientation is not recommended.

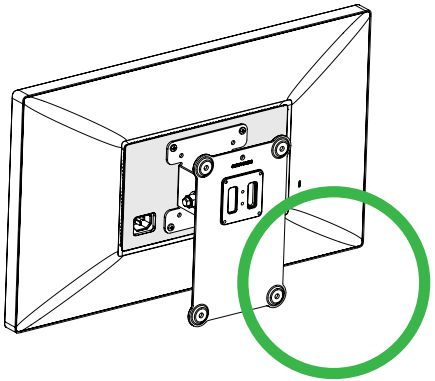

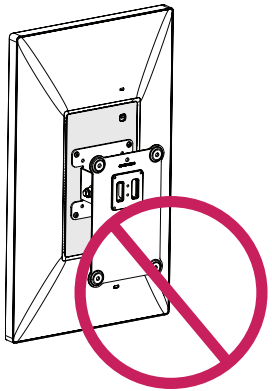

MAKING CONNECTIONS

⚠ CAUTION

- If you use generic cables not certified by LG, the screen may not display or there may be image noises.
- Do not press the screen for a prolonged time. This may cause image distortion.
- Do not display a still image on the screen for a prolonged time. This may cause image retention. Use a screensaver if possible.
- The plugs of the cable may become hot during operation. Do not touch the plug for a long time.

NOTE

- When connecting the power cord to the outlet, use a grounded (3-hole) power strip or a grounded power outlet.
- The monitor may flicker when turned on in an area where the temperature is low. This is normal.
- Sometimes red, green, or blue spots may appear on the screen. This is normal.

Connecting to a host

- This monitor supports the *Plug and Play feature.

* Plug and Play: A feature that allows you to add a device to your computer without having to reconfigure anything or install any manual drivers.

Thunderbolt™ 3 (⚡) connection

Please connect a Thunderbolt™ 3(⚡) host with Thunderbolt cable.

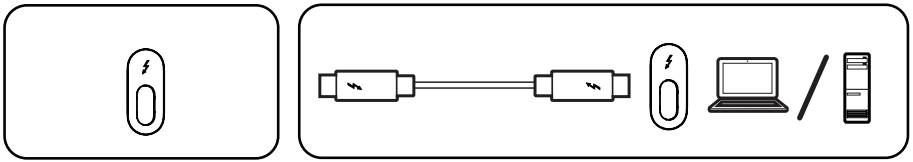

USB-C connection

Please connect a USB-C host with USB-C cable.

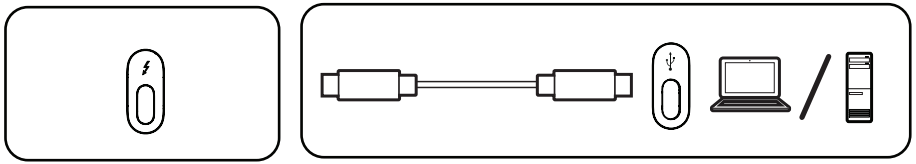

NOTE

- PD (Power Delivery) is supported via Thunderbolt™ 3(⚡) / USB-C Host (Mac) port.
- Features may not work properly depending on the connected device's specifications and the environment.
- Thunderbolt™ 3(⚡) / USB-C Host (Mac) port is not for the Monitor Power source but for a PC power source. Connect the Power cord to supply power to the Monitor.
- Make sure to use the supplied cable. Otherwise, this may cause the device to malfunction.
- The charging speed may vary depending on the port and device.
- Thunderbolt™ 3(⚡) / USB-C Host (Mac) is supported in such environments as Windows 10 and Mac product.
- In accordance with Mac products may not support the recommended resolution or the some features.
- For more information about the latest Mac device supported list, refer to Apple website at *www.apple.com*.

Connecting to USB Device

Power Delivery 5 V/1.5 A is supported via the USB expansion port.

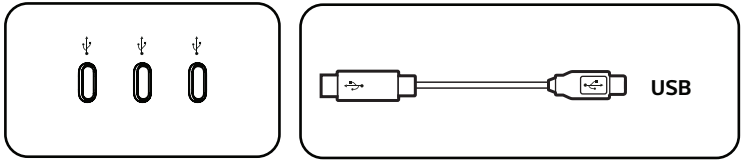

NOTE

- Peripheral devices are sold separately.

TROUBLESHOOTING

Nothing is displayed on the screen.	
Is your monitor connected to your Mac?	• Connect your monitor to your Mac. The monitor will turn on automatically if the PC is operating normally.
Is the monitor's power cord plugged in?	• Check if the power cord is correctly plugged into the power outlet.

The screen retains an image.	
Does image sticking occur even when the monitor is turned off?	• Displaying a still image for a prolonged time may cause damage to the screen, resulting in the retention of the image. • To extend the lifetime of the monitor, use a screensaver.

Screen display is unstable and shaky. / Images displayed on the monitor leave shadow trails.	
Did you select the appropriate resolution?	• Set your monitor to the recommended (optimal) resolution. • Update your Mac OS or driver to the latest version.

NOTE

- Not setting the graphics card to the recommended (optimal) resolution may result in blurred text, a dimmed screen, a truncated display area or misalignment of the display.
- The setting methods may be different depending on the computer or operating system, and some resolutions may not be available depending on the performance of the graphics card. If this is the case, contact the manufacturer of the computer or graphics card for assistance.
- Some graphics cards may not support 5120 × 2880 resolution. If the resolution cannot be displayed, contact the manufacturer of your graphics card or Mac, please update your OS or driver to the latest version.

The display color is abnormal.	
Does the display color appear unstable or monochrome?	• Check if the signal cable is connected properly. Reconnect the cable or reinsert the PC's graphics card.
Are there spots on the screen?	• When using the monitor, pixilated spots (red, green, blue, white, or black) may appear on the screen. This is normal for an LCD screen. It is not an error, nor is it related to the monitor's performance.

The brightness cannot be adjusted. The ALS(Ambient Light Sensor) does not work.	
Have you updated Mac OS or Host for this operation?	• The ambient light sensor operates in accordance with Mac OS. Some Mac OS doesn't support the display ALS(Ambient Light Sensor). • You can also adjust the monitor brightness by controlling the menu or hot key of a host manually.

PRODUCT SPECIFICATION

The product specifications below may be changed without prior notice due to upgrade of product functions.

LCD Screen	Type	TFT (Thin Film Transistor) LCD (Liquid Crystal Display) Screen	
	Color Depth	8-bit, 10-bit color is supported.	
	Pixel Pitch	0.11685 mm x 0.11685 mm	
Resolution	Thunderbolt™ 3 (⚡)	Max Resolution	5120×2880 @ 60 Hz
		Recommended Resolution	
	USB-C	Max Resolution	3840×2160 @ 60 Hz
		Recommended Resolution	
Video Signal	Horizontal Frequency	88 kHz to 178 kHz	
	Vertical Frequency	48 Hz to 60 Hz	
Input Connector	Thunderbolt™ 3(⚡) / USB-C Host (Mac) connection port, USB expansion port x 3		
Power Sources	Power Rating	100 - 240 V~ 50/60 Hz 2.5 A	
	Power Consumption	On Mode: 37 W Typ. (ENERGY STAR® standard) * Off Mode: ≤ 0.3 W (No cable connection from monitor and USB expansion)	
Stand Angle	Forward/Backward: -5° to 25° (Head)		

Environmental Conditions	Operating Conditions	Temperature	0 ℃ to 40 ℃
		Humidity	Less than 80 %
	Storing Conditions	Temperature	-20 ℃ to 60 ℃
		Humidity	Less than 85 %
Speaker	Stereo Speakers		
Camera	Built-in USB Camera		
Microphone	Built-in USB Microphone		

Dimensions	Monitor Size (Width x Height x Depth)	
	With Stand (mm)	625.6 x 464.4 x 239.9
	Without Stand (mm)	625.6 x 375.1 x 53.8
Weight (Without Packaging)	With Stand (kg)	8.5
	Without Stand (kg)	6.4

* The On Mode of power consumption is measured with ENERGY STAR® test standard.
The power consumption level can be different by operating condition and monitor setting.
The monitor goes into the sleep mode in a couple of minutes. (Max 5 minutes)

Signal Timing

Resolution	Horizontal Frequency (kHz)	Vertical Frequency (Hz)	Polarity (H/V)	Remarks
640 x 480	31.469	59.94	-/-	
3840 x 2160	133.32	60	+/-	
3200 x 1800	111.12	60	+/-	
2560 x 1440	88.86	60	+/-	
5120 x 2880	177.71	60	+/-	Main Recommended Timing

LG
Life's Good

The model and serial number of the product are located on the back and on one side of the product. Record them below in case you ever need service.

Model

Serial No.

This Product qualifies for ENERGY STAR®

Changing the factory default configuration and settings or enabling certain optional features and functionalities may increase energy consumption beyond the limits required for ENERGY STAR® certification.

Refer to ENERGYSTAR.gov for more information on the ENERGY STAR® program.