Printing Specification

1. Specification

Models	1. Model Name:	OLEDG3*
	2. Suffix:	TR
	3. Part No:	MFL71833980
	4. REV	REV00
	5. Number of pages	16
	6. Folded/Unfolded	3 Folded
SIZE	7. Trim size (W x H)_Unfolded (mm)	296 x 420 (+/-5)
	8. Trim size (W x H)_folded (mm)	148 x 105
	9. Bindery	-
COVER	10. Color (Cover)	-
	11. Paper (Cover)	-
	12. Weight (cover) (g/㎡)	-
INNER	13. Color (inner)	4 (CMYK)
	14. Paper (inner)	Wood free
	15. Weight (inner) (g/㎡)	70 (+/-10)
	16. Coating	No
	17. Thomson	No
	18. Sub-material	No
	19. Languages	ENG

1.1 Folding / Cover

Folded Step

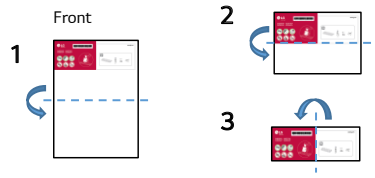

Folded

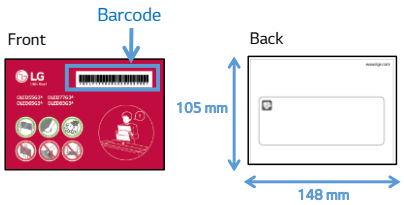

2. Origin Notification



Changes the Country name.

Printed in [Country Name in English]

Imprimé en(au) [Country Name in French]

[Country Name] (ENG/FRE)	
LGERS / LGEMX :	Printed in Mexico Imprimé au Mexique
LGEKR :	Printed in Korea Imprimé en Corée
LGEMA :	Printed in Poland Imprimé en Pologne
LGEND :	Printed in China Imprimé en Chine
LGEIN :	Printed in Indonesia Imprimé en Indonésie
Others :	Each Country name.

NOTE

[Restriction of Hazardous Substances]

Hazardous substances on this product should be satisfied by substance regulation of Level A-I, A-II, SVHC according to LG(52)B—5011 standard.
Especially, Part should be followed and controlled the following specification.

(1) Hazardous substances test report should be submitted when part certification test and first mass production.

(2) Especially, Don't use or contain lead (Pb) and cadmium (Cd) in ink.

INK REQUIREMENT FOR EU

(1) The amount of MOAH/MOSH must be less than 0.1% of the weight of the INK used.

* MOAH(Mineral Oil Aromatic Hydrocarbons) : Consisting of 1 to 7 aromatic cycles
* MOSH(Mineral Oil Saturated Hydrocarbons) : Consisting of 16 to 35 carbon atoms

(2) From 01 January 2025 : Ban on the use of MOAH in INK up to a limit of one part per million(1ppm) for compounds of 3 to 7 aromatic cycles

3. History

Rev. Number	Date	Description	ECO Number	Owner	Aditya.K
REV07					
REV06					
REV05					
REV04					
REV03					
REV02					
REV01					
REV00	03/10/2023	-	-	Checked	Aditya.K
				Approved	Nitin.H

LG
Life's Good

MFL71833980230 8REV00

Quick Start Guide

OLED55G3* **OLED77G3***
OLED65G3* **OLED83G3***





www.lg.com

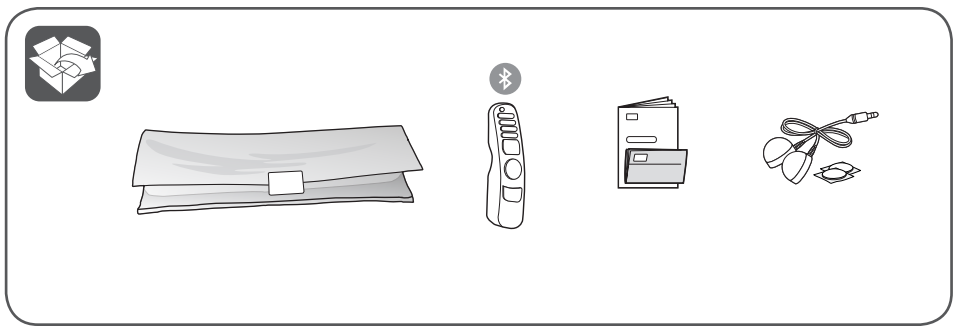

Images and Accessory parts shown in manual may vary depending on model.

Unpacking

Check your product box for the following items. If there are any missing accessories, contact the local dealer where you purchased your product. The illustrations in this manual may differ from the actual product and item.

1-A

OLED55/65/77G3*

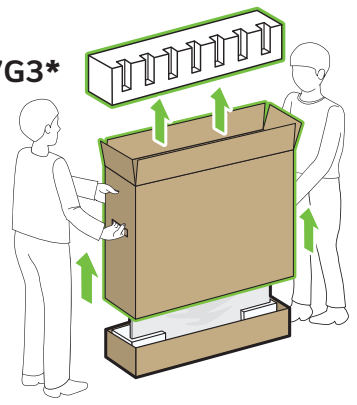

1-B

OLED83G3*

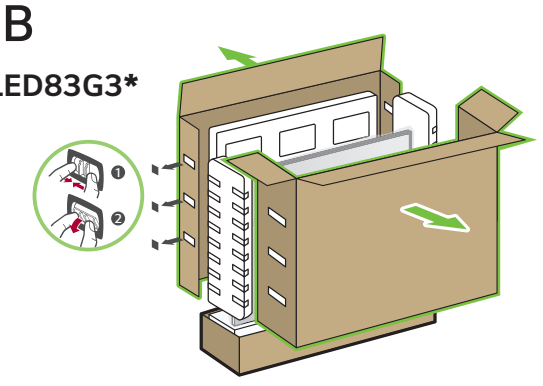

2

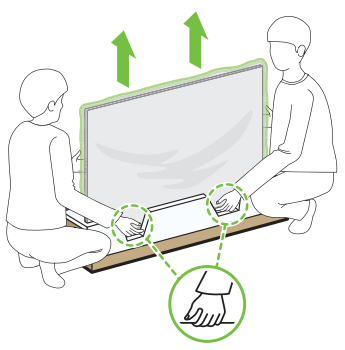

3

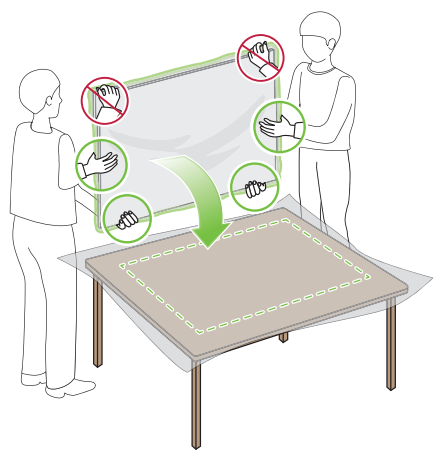

4

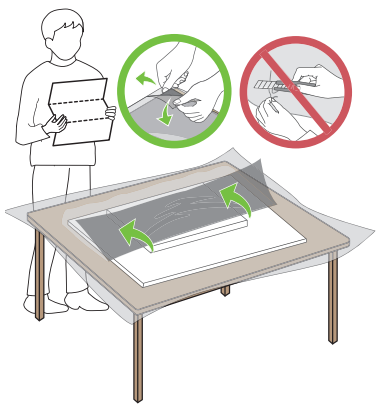

OLED55/65G3*

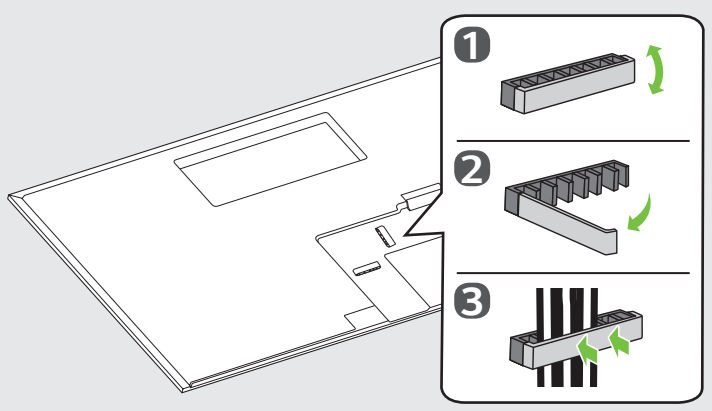

OLED77/83G3*

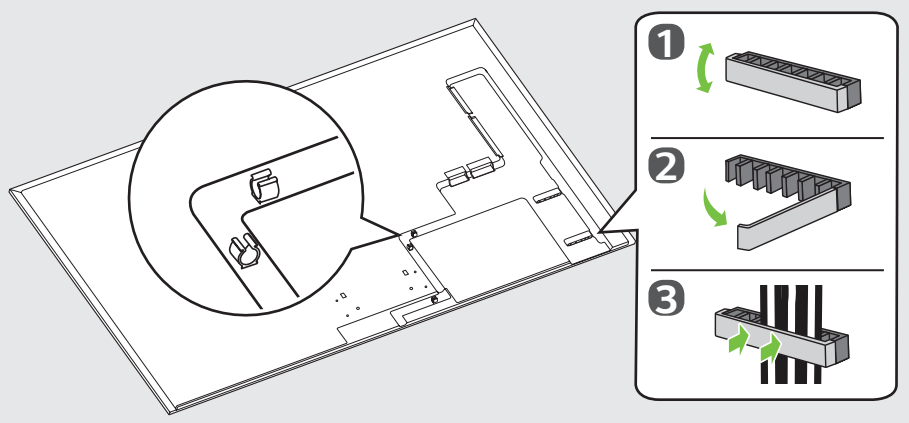

OLED55/65G3*

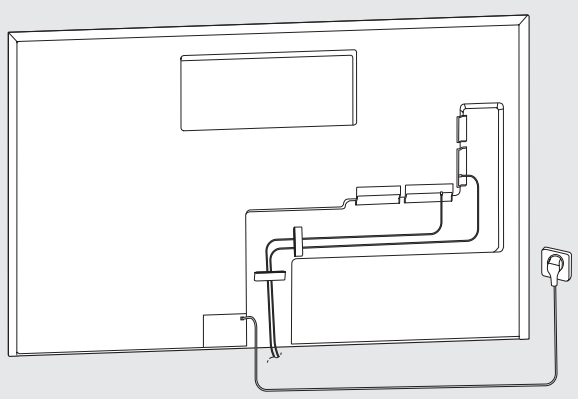

OLED77/83G3*

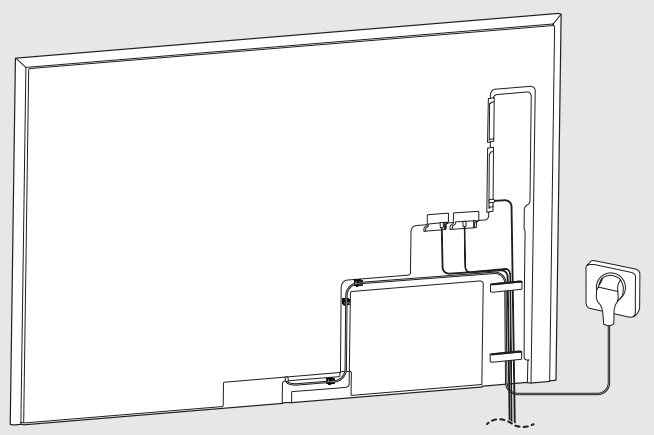

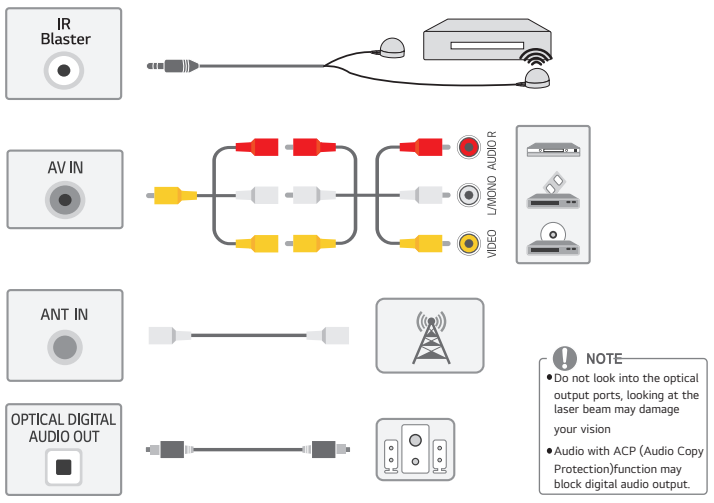

NOTE

- Do not look into the optical output ports, looking at the laser beam may damage your vision
- Audio with ACP (Audio Copy Protection)function may block digital audio output.

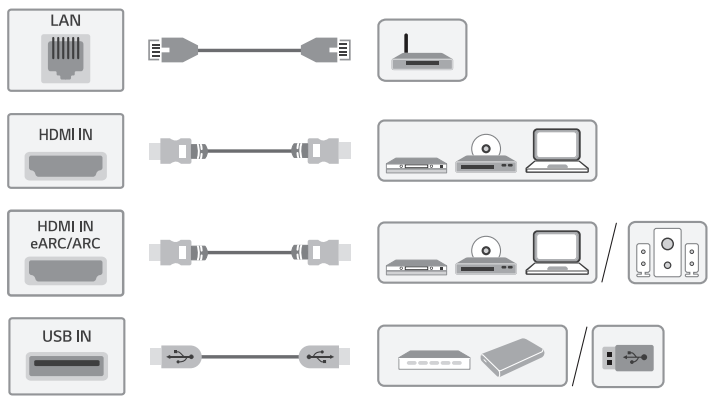

ARC (Audio Return Channel)

An external audio device that supports SIMPLINK and ARC must be connected using HDMI IN eARC/ARC port

When connected with a high-speed HDMI cable, the external audio device that supports ARC outputs SPDIF audio without additional audio cable and supports the SIMPLINK function

NOTE

- Some USB Hubs may not work, if a USB device connected using a USB Hub is not detected, connect it to the USB port on the TV directly
- Connect the external power source if your USB is needed.

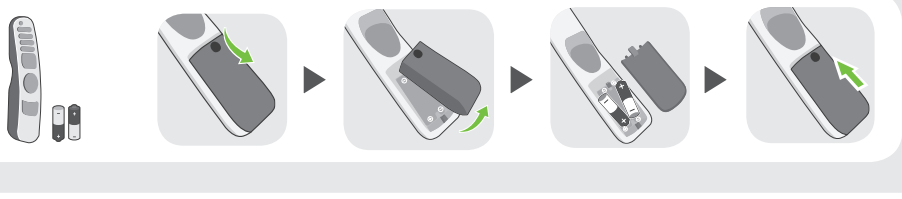

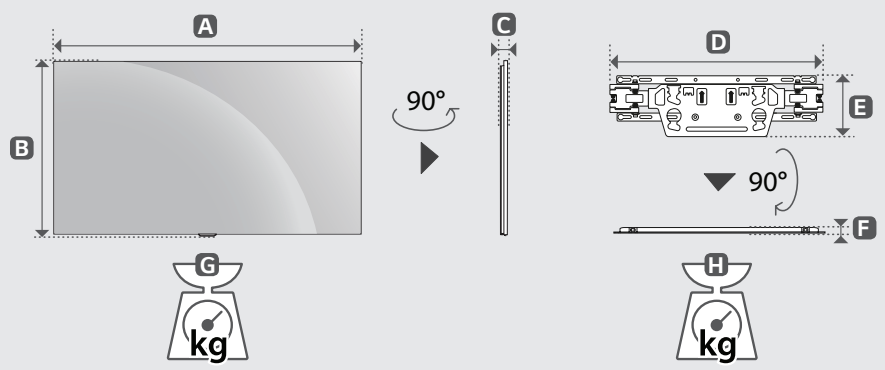

	A	B	C	D	E	F	G	H
	(mm)						(kg)	
OLED55G3PSA OLED55G36LA	1222	703	27.2	452	129	13	17.8	1.2
OLED65G3PSA OLED65G36LA OLED65G3XSA	1441	826	24.3	452	129	13	23.9	1.2
OLED77G3PSA OLED77G36LA	1712	982	24.8	452	129	13	36.8	1.2
OLED83G3PSA OLED83G36LA	1847	1057	28	452	129	13	40.9	1.2

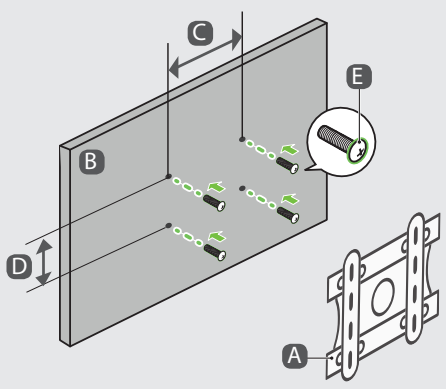

A	B	C x D (mm)	E
Wallmount Bracket	OLED55G3*	300 x 200	M6
	OLED65G3*	300 x 300	M6
	OLED77G3*	300 x 300	M6
	OLED83G3*	400 x 400	M6

