LG

MFL05813237260 6REV01

32LX6*





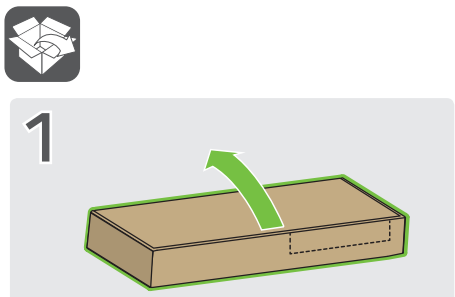

www.lg.com

PDF

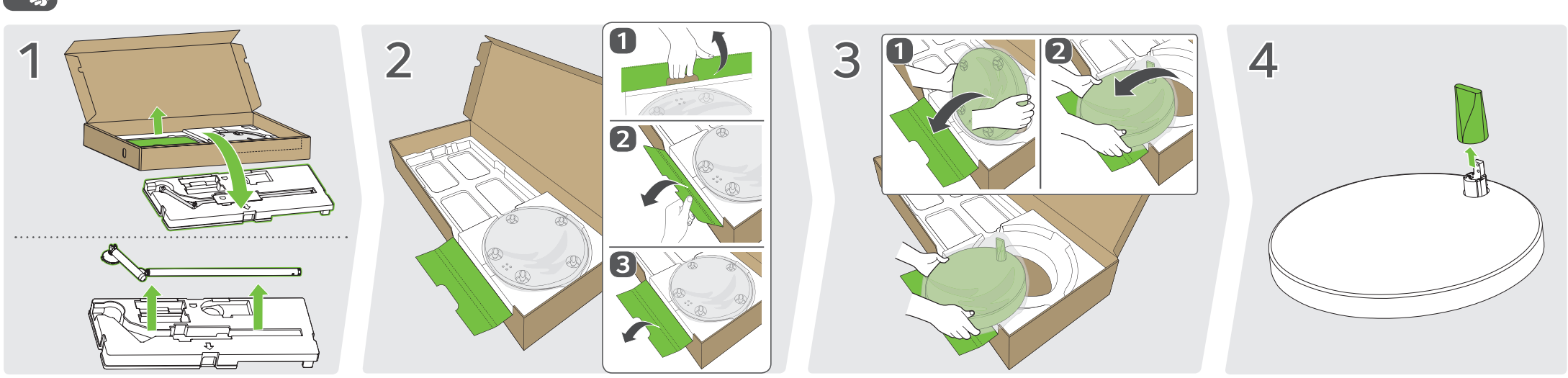

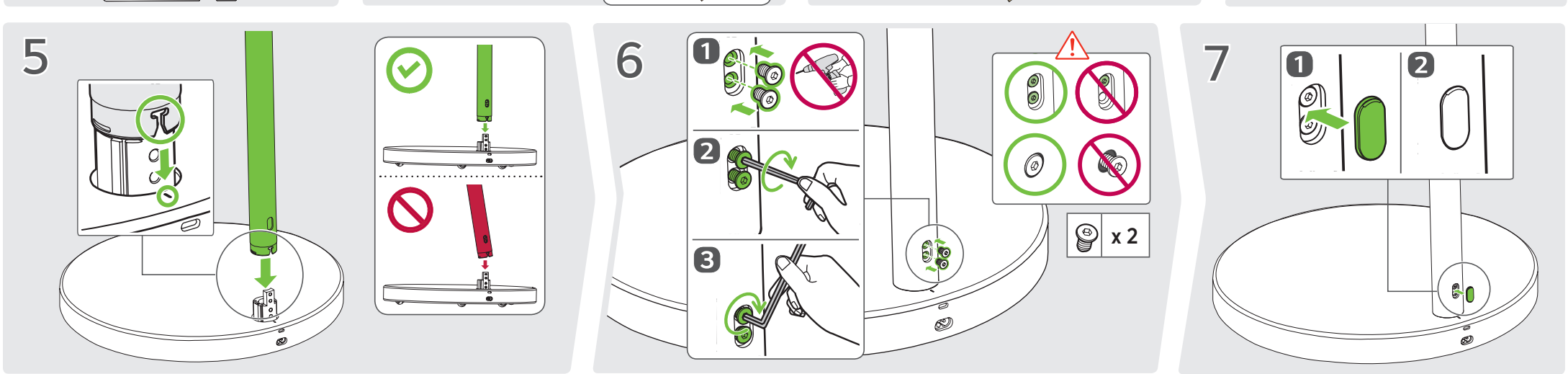

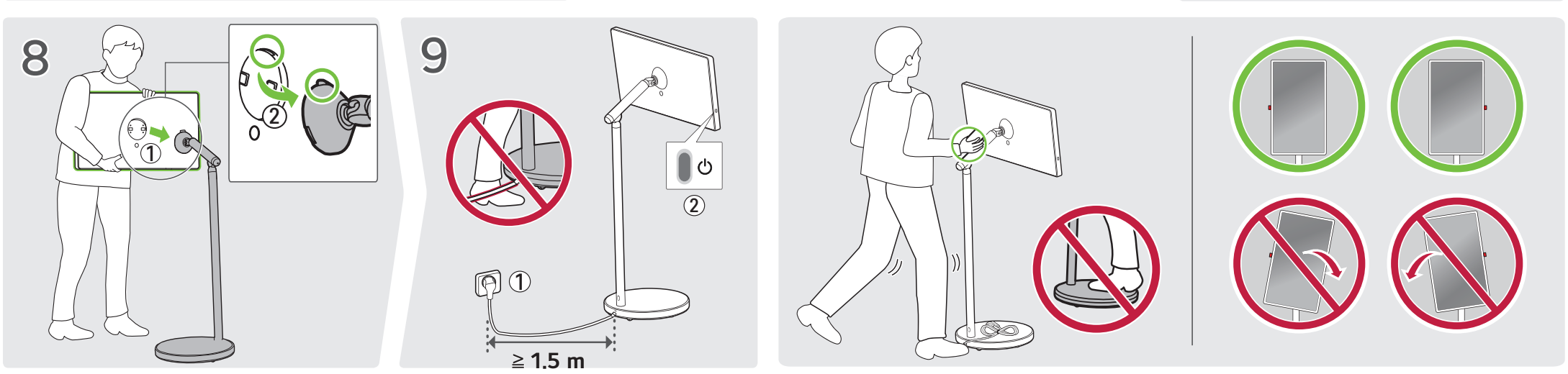

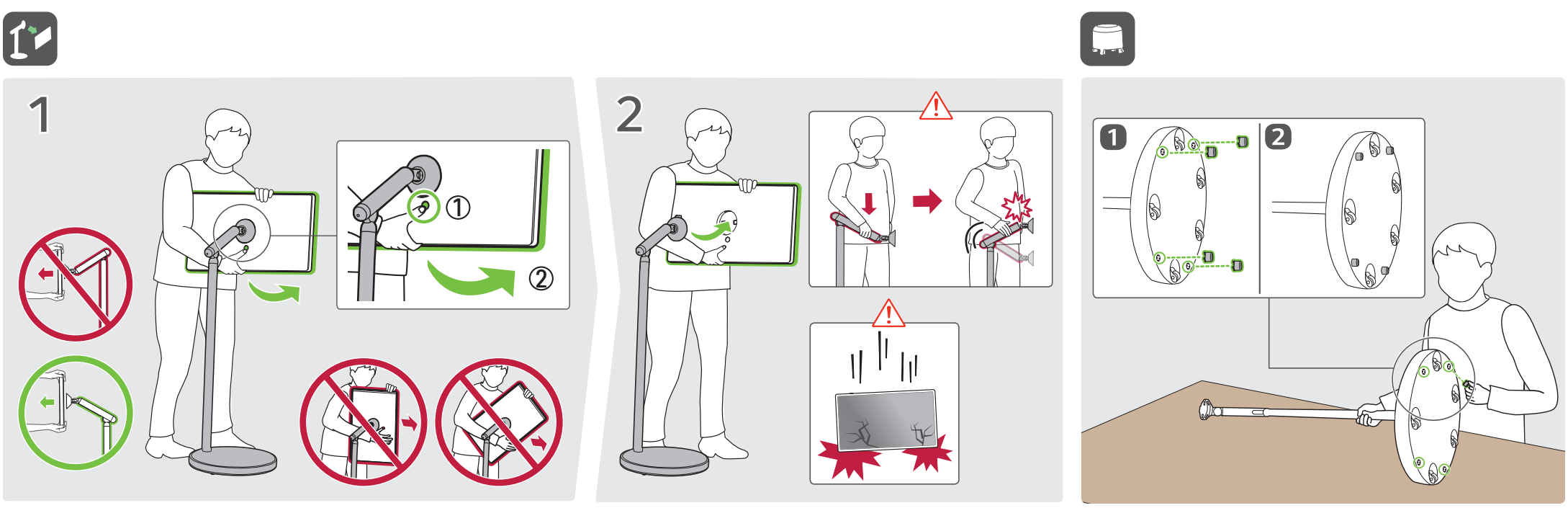

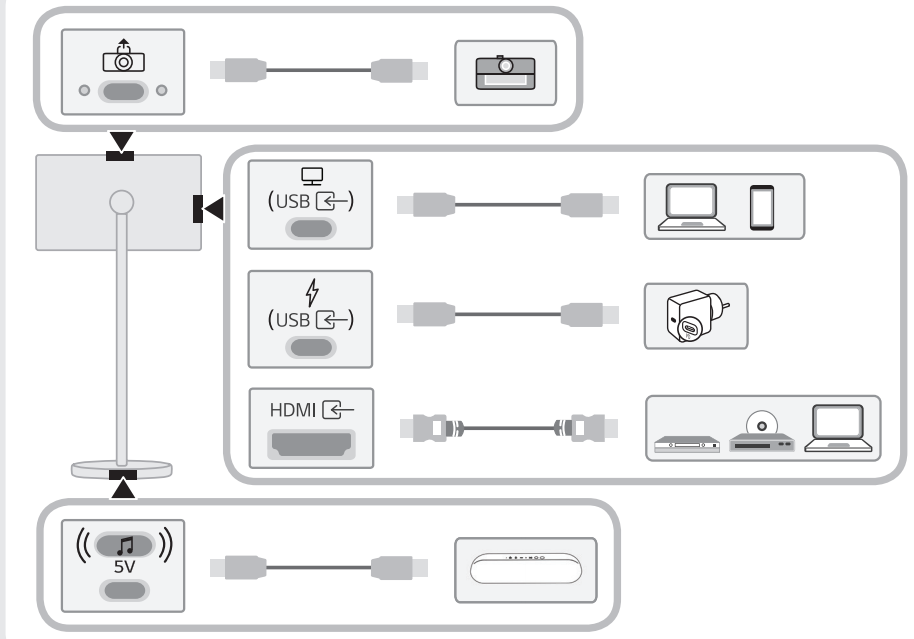

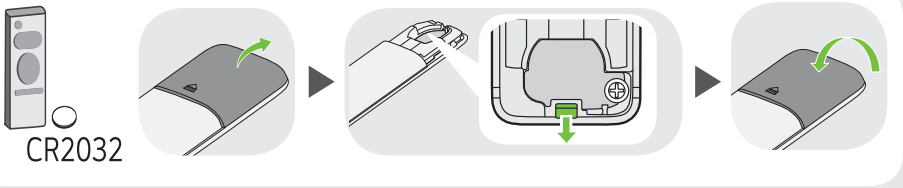

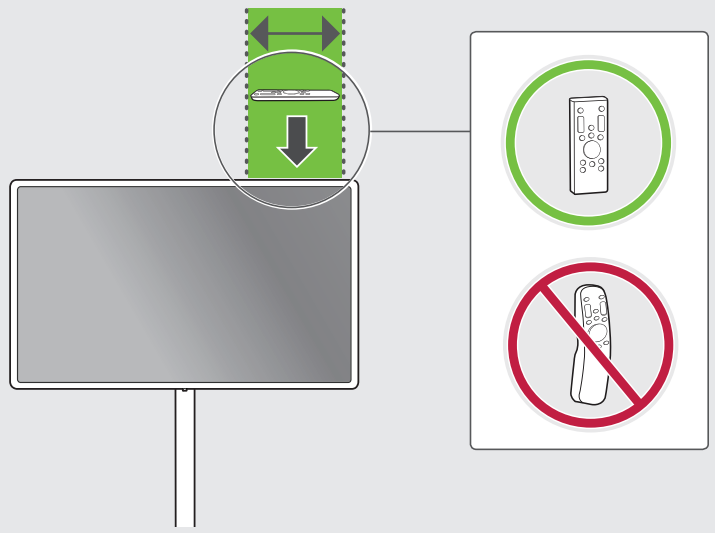

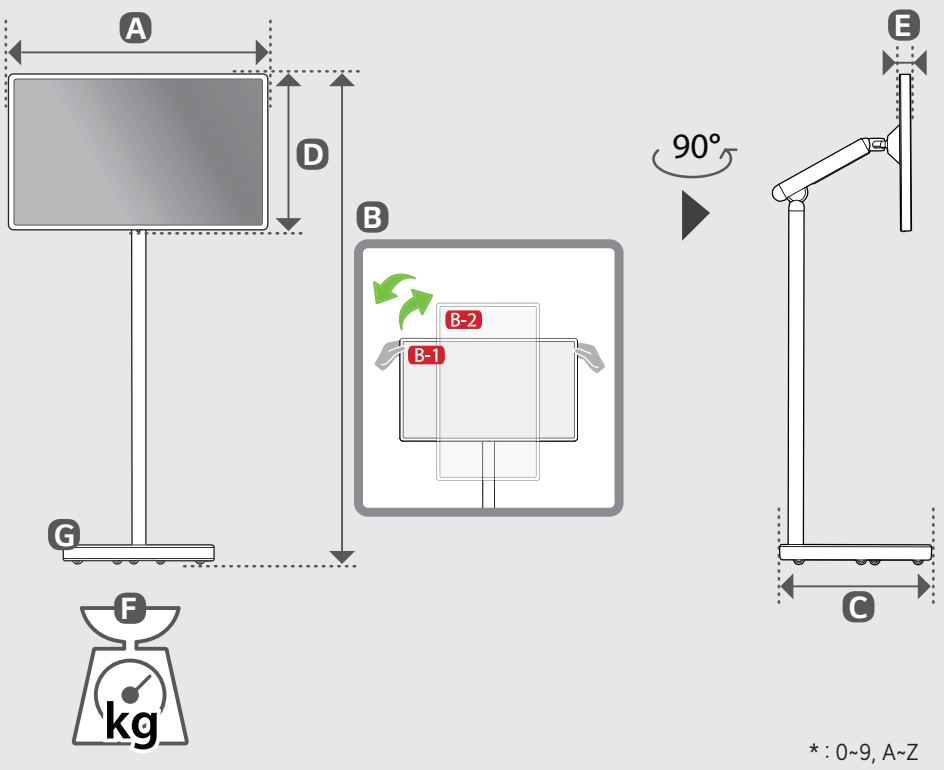

* : 0~9, A~Z

	mm					kg	
	A	B	C	D	E	F	F - G
32LX6*	724	B-1 1 308 / 1 317 B-2 1 461 / 1 470	420	421	28.5	20.3	5.6

Depending on country

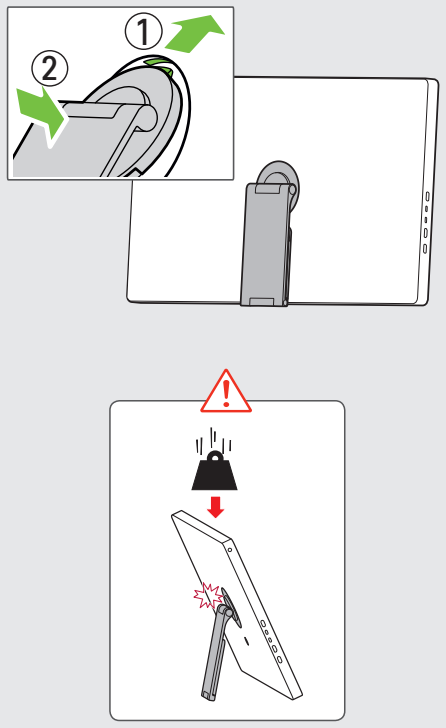

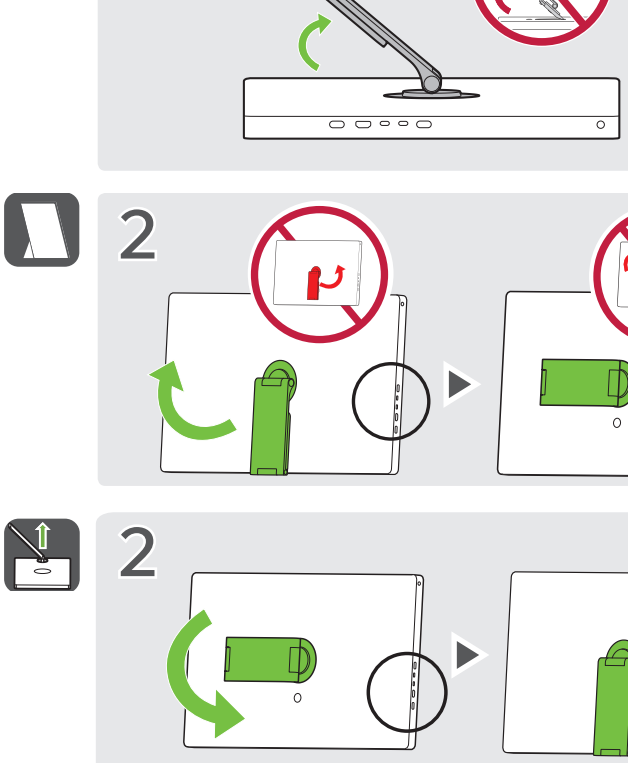

32LX6BD* 32LX6BP*

