OWNER'S MANUAL

AIR CONDITIONER

Read this owner's manual thoroughly before operating the appliance and keep it handy for reference at all times.

TYPE : WINDOW (INVERTER)

EN ENGLISH

MFL71860118
Rev.00_022222

www.lg.com

Copyright © 2022 LG Electronics Inc. All Rights Reserved

TABLE OF CONTENTS

SAFETY INSTRUCTIONS 3
IMPORTANT SAFETY INSTRUCTIONS 4

PRODUCT OVERVIEW 8
Exterior Parts 8
Interior Parts 8

INSTALLATION 9
Circuit Breaker Installation 9
Installation Overview 9
Tools Needed 9
How to Install the Unit 10
Preparation of the Cabinet 10
Drainage (Optional) 10
Installation of the Cabinet 11
Space for Outside Air Flow 11
Installations of the unit into the Cabinet 12

OPERATION 13
Control Panel and Remote Control 13
Using the Light Off Function 15
Using the Auto Clean Function 15
Wireless Remote Control 15
Air Direction 16
Slinger Fan 16

SMART FUNCTIONS 17
LG ThinQ Application 17
Smart Diagnosis 18

MAINTENANCE 19
Air Filter 19

TROUBLESHOOTING 20
Before Calling for Service 20
Normal Sounds You May Hear 20

READ ALL INSTRUCTIONS BEFORE USE

Your safety and the safety of others are very important.

We have provided many important safety messages in this manual and on your appliance. Always read and follow all safety messages.

This is the safety alert symbol.

This symbol alerts you to potential hazards that can kill or injure you and others.

All safety messages will follow the safety alert symbol and either the word WARNING or CAUTION.

These words mean:

WARNING

You may be killed or seriously injured if you do not follow instructions.

CAUTION

You may be injured or cause damage to the product if you do not follow instructions.

All safety messages will tell you what the potential hazard is, tell you how to reduce the chance of injury, and tell you what may happen if the instructions are not followed.

The following symbols are displayed on units.

This symbol indicates that this appliance uses a flammable refrigerant. If the refrigerant is leaked and exposure to an external ignition source, there is a risk of fire.

This symbol indicates that the Operation Manual should be read carefully.

This symbol indicates that a service personnel should be handling this equipment with reference to the Installation Manual.

This symbol indicates that information is available such as the Operating Manual or Installation Manual.

IMPORTANT SAFETY INSTRUCTIONS

⚠ WARNING

To reduce the risk of explosion, fire, death, electric shock, scalding or injury to persons when using this product, follow basic precautions, including the following:

INSTALLATION

- Before use, the appliance must be properly installed as described in this manual.
- Contact the authorized service technician for repair or maintenance of this unit.
- Contact the installer for installation of this unit.
- The air conditioner is not intended for use by young children or invalids without supervision.
- Keep any required ventilation openings clear of obstruction.
- Compliance with national gas regulations shall be observed.
- When the power cord is to be replaced, replacement work shall be performed by authorized personnel only using only genuine replacement parts.
- Installation work must be performed in accordance with the National Electric Code by qualified and authorized personnel only.
- Connect to a properly rated, protected, and sized power circuit to avoid electrical overload.
- Always plug into a grounded outlet.
- Do not under any circumstances, cut or remove the third (ground) prong from the power cord.
- When installing or moving the appliance, be careful not to pinch, crush, or damage the power cord.
- Plug in the power plug properly.
- Do not modify or extend the power cord.
- Do not start/stop operation by plugging/unplugging the power cord.
- Do not turn on the circuit breaker or power under condition that front grille, cabinet, control box are removed or opened. Otherwise, it may cause fire, electric shock, explosion or death.
- If the supply cord is damaged, it must be replaced by the manufacturer, its service agent or similarly qualified person in order to avoid a hazard.
- Use a dedicated circuit.
- Do not disassemble or modify the product.
- Adhere to all industry recommended safety procedures including the use of long-sleeved gloves and safety glasses.
- Disconnect the power cord or circuit breaker before installing or servicing the appliance.
- Keep packaging materials out of the reach of children. These materials can pose a suffocation risk to children.
- Store and install the product where it will not be exposed to temperatures below freezing or exposed to outdoor weather conditions.
- Do not store or use gasoline or other flammable vapors and liquids in the vicinity of this or any other appliance.

OPERATION

- Use this appliance only for its intended purpose.
- Never attempt to operate this appliance if it is damaged, malfunctioning, partially disassembled, or has missing or broken parts, including a damaged cord or plug.
- Repair or immediately replace all power cords that have become frayed or otherwise damaged. Do not use a cord that shows cracks or abrasion damage along its length or at either end.
- Do not run cord under carpets or mats where it could be stepped on and damaged.
- Keep the cord out from under heavy objects like tables or chairs.
- Do not place the power cord near a heat source.
- Do not use an adaptor or plug the product into a shared outlet.
- Do not tamper with controls.
- If you detect a strange sound, a chemical or burning smell, or smoke coming from the appliance, unplug it immediately, and contact the LG Electronics Customer Information Center.
- Never unplug the appliance by pulling on the power cord. Always grip the plug firmly and pull straight out from the outlet.
- Do not grasp the power cord or touch the appliance controls with wet hands.
- If water enters the product, turn off the power at the main circuit, then unplug the product and call for service.
- If the product has been submerged, contact the LG Electronics Customer Information Center for instructions before resuming use.
- Unplug the product when unused for long periods.
- Unplug the product before cleaning.
- In the event of a gas leak (propane gas, etc.) do not operate this or any other appliance. Open a window or door to ventilate the area immediately.
- This appliance is not intended for use by persons (including children) with reduced physical, sensory or mental capabilities, or lack of experience and knowledge, unless they have been given supervision or instruction concerning the use of the appliance by a person responsible for their safety. Children should be supervised to ensure that they do not play with the appliance.
- The interior of the product must only be cleaned by an authorized service center or a dealer.
- Do not use solvent-based detergent on the product. Doing so can cause corrosion or damage, product failure, electrical shock, or fire.

GROUNDING INSTRUCTIONS

- The power cord of this appliance is equipped with a three-prong (grounding) plug. Use this with a standard three-slot (grounding) wall power outlet to minimize the hazard of electric shock. The customer should have the wall receptacle and circuit checked by a qualified electrician to make sure the receptacle is properly grounded. ***DO NOT CUT OR REMOVE THE THIRD (GROUND) PRONG FROM THE POWER PLUG.***
  - Situations when the appliance will be disconnected occasionally; Because of potential safety hazards, we strongly discourage the use of an adapter plug.
- Attaching the adapter ground terminal to the wall receptacle cover screw does not ground the appliance unless the cover screw is metal, and not insulated, and the wall receptacle is grounded through the house wiring. The customer should have the circuit checked by a qualified electrician to make sure the receptacle is properly grounded.
- Disconnect the power cord from the adapter, using one hand on each. Otherwise, the adapter ground terminal might break. Do not use the appliance with a broken adapter plug.
  - Situations when the appliance will be disconnected often; Do not use an adapter plug in these situations. Unplugging the power cord frequently can lead to an eventual breakage of the ground terminal. The wall power outlet should be replaced by a three-slot (grounding) outlet instead.

⚠ CAUTION

To reduce the risk of minor or moderate injury to persons, malfunction, or damage to the product or property when using this product, follow basic precautions, including the following:

INSTALLATION

- Take care when installing the product that exhaust or condensation does not damage nearby property.
- Follow installation instructions exactly to avoid excessive vibration or water leakage.
- Do not install the appliance in an area where it is directly exposed to sea air (salt spray).
  - Saline conditions are a cause of corrosion. (Particularly, corrosion of the condenser and evaporator can damage the appliance or impair its performance.)
- Set up windbreak in front of the outdoor unit if installing it in coastal areas.
  - Avoid direct exposure to salt winds.
  - Install a firm and stiff concrete-wind shield that can withstand salt winds.
- Wear gloves and use caution when unpacking and installing the appliance. Screws or sharp edges can cause injuries.

OPERATION

- This appliance is not intended for use as a precision refrigeration system. Do not use it for special purposes such as maintaining pets, food, precision machinery, or art objects.
- When installing or moving the appliance, be careful not to pinch, crush, or damage the power cord.
- Make sure the air inlet and outlet are free from obstructions.
- Use a soft cloth to clean the appliance. Do not use waxes, thinners, or harsh detergents.
- Do not step on or place heavy objects on top of the appliance.
- Do not operate the appliance without the filter securely installed.
- Do not drink water drained from the appliance.
- Be sure to ventilate sufficiently when the air conditioner and a heating appliance such as a heater are used simultaneously.
- Being exposed to direct airflow for an extended period of time could be hazardous to your health.
- Remove the batteries if the remote control is not to be used for an extended period of time.
- Never mix different types of batteries, or old and new batteries for the remote control.
- Stop using the remote control if there is a fluid leak in the battery. If your clothes or skin are exposed to the leaking battery fluid, wash off with clean water.
- If the leaking battery fluid has been swallowed, rinse the inside of the mouth thoroughly and consult a doctor.
- Do not recharge or disassemble the batteries.

MAINTENANCE

- Clean the filter every two weeks.
- Never touch the metal parts of the air conditioner when removing the air filter.
- Never use strong cleaning agents or solvents when cleaning the air conditioner or spray water. Use a smooth cloth.

REFRIGERANT (FOR R32 ONLY)

⚠ WARNING

- Do not use means to accelerate the defrosting process or to clean, other than those recommended by the manufacturer.
- The appliance shall be stored in a room without continuously operating open flames (for example an operating gas appliance) and ignition sources (for example an operating electric heater).
- Do not pierce or burn. Be aware that flammable refrigerants may not contain an odor.
- The appliance shall be stored in a well-ventilated area where the room size corresponds to the room area as specified for operation.
- The appliance shall be stored so as to prevent mechanical damage from occurring.

Technical Safety

- Any person who is involved with working on or breaking into a refrigerant circuit should hold a current valid certificate from an industry-accredited assessment authority, which authorises their competence to handle refrigerants safely in accordance with an industry recognised assessment specification.
- Servicing shall only be performed as recommended by the equipment manufacturer. Maintenance and repair requiring the assistance of other skilled personnel shall be carried out under the supervision of the person competent in the use of flammable refrigerants.

Disposal of your old appliance (as per e-waste Rules)

1. When this crossed out wheeled bin symbol is depicted on the product and its operator's manual, it means the product is covered by the e-waste Management and Handling Rules , 2011 and are meant to be recycled, dismantled, refurbished or disposed off.
2. **Dos**
   a. The product is required to be handed over only to the authorized recycle for disposal.
   b. Keep the product in isolated area, after it becomes non-functional/ un-repairable so as to prevent its accidental breakage.

Don't

a. The product should not be opened by the user himself/herself, but only by authorized service personnel.
b. The product is not meant for re-sale to any unauthorized agencies/scrap dealer/ kabariwalah.
c. The product is not meant for mixing into household waste stream.
d. Do not keep any replaced spare part(s) from the product in exposed area.

3. Any disposal through unauthorized agencies/person will attract action under Environment (Protection) Act 1986 **.**
4. Hazards of improper handling or accidental breakage
   a. If batteries are disposed incorrectly, it can greatly harm the environment. The chemical by-products are hazardous**.** The metals and chemicals found in batteries can mix into soil which may be hazardous to humans, plants and animals. If thrown in fire, they can cause blast and release toxic gases which may be harmful for health.
   b. The refrigerant (R32) used can be combustible at low pressure. The potential health effects of over exposure is dizziness, headache and heart irregularities
5. "This product is complied with the requirement of Hazardous Substances as specified under Rule 13 (1) & (2) of the E-Waste (Management & Handling) Rules, 2011".
6. To locate a nearest collection centre or call for pick-up (limited area only) for disposal of this appliance, please contact Toll Free No.**1800-315-9999 / 1800-180-9999** for details. All collection centre and pick up facilities are done by third parties with **LG Electronics India Pvt. Ltd.** merely as a facilitator**.**

For more detailed information , please visit : http://www.lge.com/in

अपने पुराने उपकरण का निपटान (ई–अपशिष्ट नियम के अनुसार)

1. जब इस काटे गये पहिये वाले बिन का चिह्न किसी उपकरण और इसके ऑपरेटर की पुस्तिका के साथ संलग्न होता हैं तो इसका मतलब है कि इसे ''ई–अपशिष्ट'' (प्रबंधन और संचालन) नियम 2011 के अन्तर्गत सम्मिलित किया गया है, और इसे नवीनीकरण, विघटन और निपटान के लिए बनाया गया है।
2. **करें**.
   क . उपकरण को सिर्फ अधिकृत पुनः नवीनीकरणकर्ता को ही निपटारण करने हेतु हस्तांतरित करें।
   ख . जब उपकरण कार्यरत न हो इसे अलग क्षेत्र में रखें ताकि उपकरण से होने वाली दुर्घटनाओ से बचा जा सके।

ना करें–

क . इस उपकरण को स्वयंख्ुद नहीं खोलना चाहिए ! उपकरण को केवल अधिकृत अधिकारी के द्वारा ही खोला जाना चाहिए।
ख–इस उपकरण को पुनः बिक्री के लिए किसी भी कबाड़ीवाला / भंगार वाला / अनाधिकृत संस्था को न दें।
ग– इस उपकरण को किसी घरेलू अपशिष्ट सामान के साथ मिलाकर न रखें।
घ– उपकरण के बदले हुए या आतंरिक पुरजो को खुले क्षेत्र में न रखें।

3. यदि किसी अनाधिकृत विभाग या व्यक्ति के द्वारा निपटारण किया जाता है तो यह पर्यावरण (सुरक्षा) धारा 1986 के अन्तर्गत आता है।
4. दुर्घटनाग्रस्त टूट / फूट तथा अव्यवस्थित रख–रखाव से बचे ।
   क– यदि बैटरियों का निपटारण अशुद्ध रूप से कर रहे हैं, तो यह वातावरण को बहुत नुकसान पहुँचा सकता हैं। रासायनिक उपकरण खतरनाक होते हैं। जो रसायन और धातु बैटरियों में पाए जाते हैं, इसे मिट्टी में मिलाने पर यह मनुष्यों, पौधों और पशुओं के लिए खतरनाक हो सकती हैं। यदि इसे आग में फेंकते हैं तो ये विस्फोट कर सकती हैं और ये जहरीली गैसें दे सकता है जो स्वास्थ्य के लिए हानिकारक हैं।
   ख– रेफ्रीजरेंट (R32) कम दबाव पर दहनशील हो सकती हैं तथा इससे स्वास्थ्य पर दुस्प्रभाव पड़ सकता है जैसे चक्कर आना, सिर दर्द और हृदय गति रूकना।
5. यह उत्पाद ई–अपशिष्ट (प्रबंधन और हथालन) नियम 2011 के अन्तर्गत 13(1) एवं (2) के तहत निर्दिष्ट खतरनाक पदार्थों की आवश्यकता का पालन करता है।
6. उपरोक्त पदार्थों के निपटारन के लिए नजदीकी निपटारन संस्थान (संकीर्ण क्षेत्र) में कॉल करें। अधिक जानकारी के लिए हमारे टोल फ्री नम्बर **1800-315-9999 / 1800-180-9999** पर कॉल करें। सभी संग्रहण केन्द्र व पिक–अप की सुविधाएं थर्ड–पार्टी से जो **LG Electronics India Pvt. Ltd** को अपनी सेवाएं प्रदान कर रही हों, से करवाएं।
   अधिक जानकारी के लिए देखें वेबसाइट : http://www.lge.com/In

PRODUCT OVERVIEW

Exterior Parts

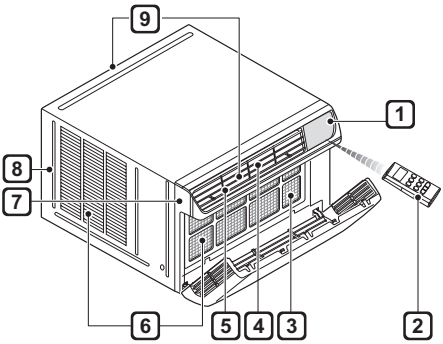

1 Control Panel

2 Remote Control

3 Air Filter

4 Vertical Air Deflector (Horizontal Louver)

5 Horizontal Air Deflector (Vertical Louver)

6 Air Inlet

7 Front Grille

8 Cabinet

9 Air Outlet

Interior Parts

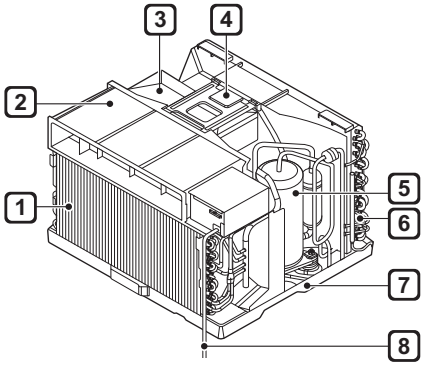

1 Evaporator

2 Air Guide

3 Control Box

4 Brace

5 Compressor

6 Condenser

7 Base Pan

8 Power Cord

Circuit Breaker Installation

Read thoroughly and follow all directions provided.

A circuit breaker must be installed between the power source and the unit if the plug is not used (see illustration below).

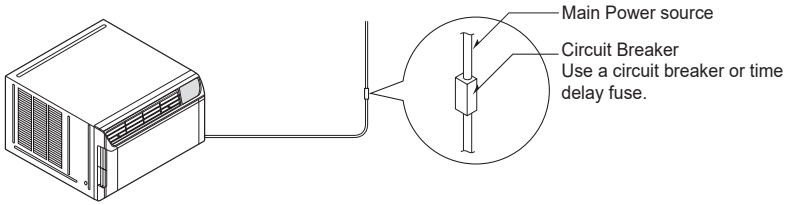

NOTE

- Use 15 A circuit breaker.

Installation Overview

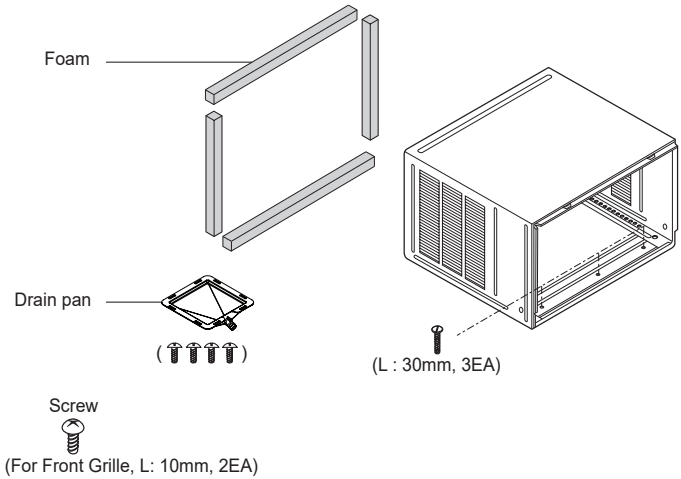

Tools Needed

Phillips-head screwdriver

Flat-blade screwdriver

Pencil

Level

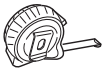

Tape measure

Cutting knife

Scissors

How to Install the Unit

1 Measure the space for installation to assure a good fit. The air conditioner must be installed firmly into place to prevent vibration and noise.

2 Avoid exposure to direct sunlight.

3 Remove all obstacles from the rear of the unit. There must be at least 50 cm (20 in.) of cleared space around the rear of the unit. Obstacles restricting the airflow may reduce the cooling efficiency of the unit.

4 The unit should be installed with a slight tilt towards the outside to allow condensed water to drain. (About 10~15 mm or 1/4 bubble with Level)

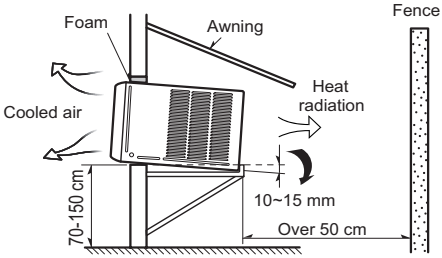

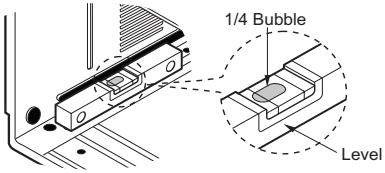

⚠ CAUTION

- The external grille must be exposed outside for air discharge.

Preparation of the Cabinet

1 Remove 5 screws which fasten the cabinet at both sides and at the back. (Keep the screws for later use.)

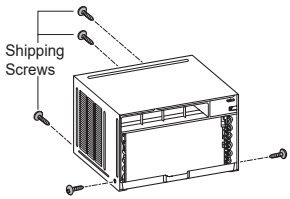

2 Slide the unit from the cabinet by gripping the base pan handle and pulling forward while bracing the cabinet.

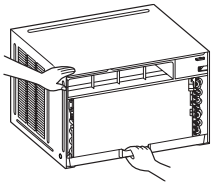

⚠ CAUTION

- The unit is heavy. To prevent injury, use proper lifting techniques when pulling unit forward from cabinet. Obtain assistance from another person if possible.

Drainage (Optional)

The base-pan may overflow due to high humidity. To drain the excess water, remove the drain cap from the base pan of the unit and secure the Drain Pan.

1 Remove the rubber cap from the hole under the base-pan.

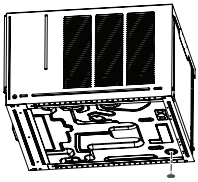

2 Install the drain pan over the corner of the cabinet with 2-4 screws.

3 Connect the drain hose to the outlet located on the bottom of the drain pan. (You can purchase the drain hose or tubing locally to satisfy your particular needs. Drain hose is not supplied.)

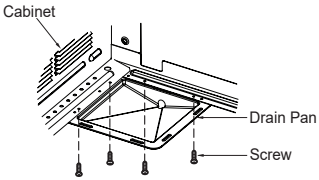

Installation of the Cabinet

1 Prepare the hole in the wall so that the bottom of the cabinet is well supported, the top has minimum clearace and the air inlet louveres have clearance as shown. Holes from the outside through to the cavity should be sealed. The cabinet should slope down towards the rear by about 10~15 mm to allow water formed during operation to drain.

2 Install the cabinet into the wall and secure. Ensure the foam seals are not damaged. Flash, seal or fill gaps around the inside and outside to provide satisfactory appearance and protection against the weather, insects and rodents.

NOTE

- Unit may be supported by a solid frame from below or by a hanger from a solid overhead support.

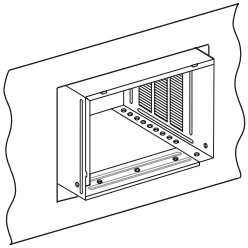

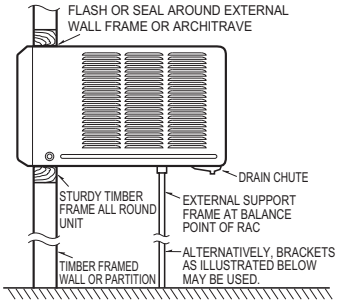

Preferred method of installation into a timber framed wall, partition or window.

Space for Outside Air Flow

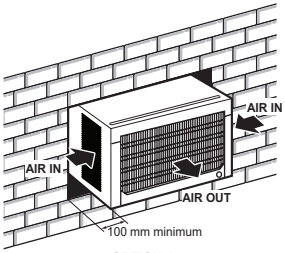

OPTION A

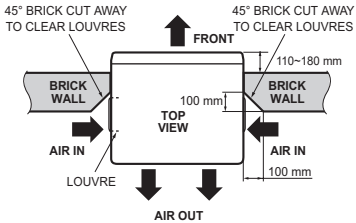

OPTION B

Installations of the unit into the Cabinet

1 Slide the air conditioner into the case. Reinstall the 2 screws removed earlier on each side of the case.

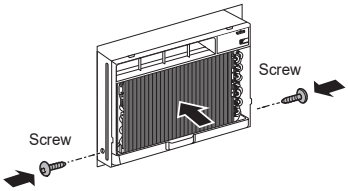

⚠ CAUTION

- The unit is heavy. Use an assistant to help lift the unit and set it in place. Lifting and maneuvering the unit by yourself could result in injury.

2 Stuff the foam around the unit to prevent air and insects from getting into the room.

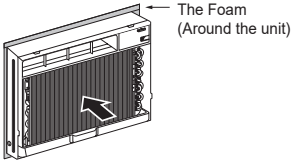

3 Connect the wire harness from the front grille assembly to the air conditioner.

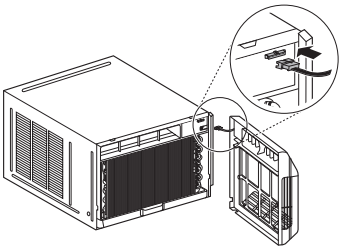

4 Attach the front grille assembly to the cabinet by inserting the grille tabs into the slots on the front of the cabinet. Push the grille in until it snaps into place.

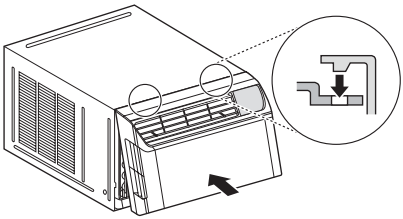

5 Open the air inlet grille and secure the front grille assembly with 2 screws (L:10 mm).

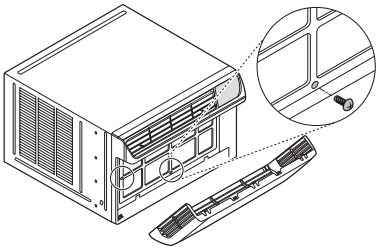

Control Panel and Remote Control

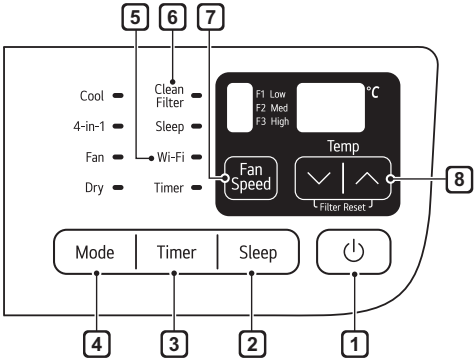

Remote Control

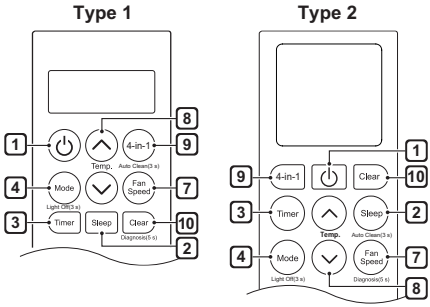

NOTE

- The feature may be changed according to the type of model.

1 **Power**
Press to turn the air conditioner ON or OFF.

2 **Sleep Mode**
This mode keeps operating noise to a minimum and turns the air conditioner off after a set time. The timer can be set from 1 to 7 hours.

- In the Cool, Dry Mode setting temperature increases by 1 °C after 30 minutes and additional 1 °C after another 30 minutes for a more comfortable sleep.
- The setting temperature increases up to 2 °C from the preset temperature.

3 **Delay ON/OFF Timer**
Delay ON - When the air conditioner is off, set it to automatically turn on from 1 to 24 hours later, at its previous mode and fan settings.

Delay OFF - When the air conditioner is on, set it to automatically turn off from 1 to 24 hours later.

NOTE

- Each press of the **Timer** button advances the timer by 1 hour. After the last press the display returns to the temperature setting.

4 **Operation Mode**
Press the Mode button to cycle between 3 types of air conditioner operation: Cool / Fan / Dry.

Cool - This mode is ideal on hot days to cool and dehumidify the room quickly. Use the **Temp** ∧ | ∨ buttons to set the desired room temperature and use the **Fan Speed** button to set the desired fan circulation speed.

Fan - In this mode the fan circulates air but the compressor does not run. Use the **Fan Speed** button to set fan speed to High, Medium or Low. In this mode, you cannot adjust the set temperature.

Dry - This mode is ideal for rainy and damp days to dehumidify the room rather than cooling it significantly. Humidity is removed from the room by the combination of compressor operation and the fan speed fixed at Low. The compressor and fan turn off once the set temperature is reached. Fan speed cannot be adjusted in Dry mode.

5 **Wi-Fi (Optional)**
Enables connection of the air conditioner to the home Wi-Fi.

- Wi-Fi Pairing : Mode + Fan Speed
- Wi-Fi Off : Power + Fan Speed

6 **Clean Filter**
The Clean Filter LED lights up to notify you that the filter needs to be cleaned. After cleaning the filter, press **Temp** ∧ and ∨ together on the control panel to turn off the Clean Filter light.

NOTE

- The filter reset must be done using the control panel, not the remote control.
- This feature is a reminder to clean the air filter for more efficient operation. The LED light turns on after 250 hours of operation.

7 **Fan Speed**
Press to set the Fan Speed to Low (F1), Medium (F2) or High (F3). Also set the Diagnosis if held for 5 seconds (For remote type 2).

8 **Temperature Control**
The thermostat monitors room temperature to maintain the desired temperature. The thermostat can be set between 16 °C–30 °C (60 °F–86 °F). Press ∧ or ∨ arrows to increase or decrease temperature setting.

9 **4-in-1**
Press **4-in-1** button repeatedly to select each step.

NOTE

- 1 step : The power Input is decreased by 20% compared to rated power input.
  - 80 is displayed on the display screen.
- 2 step : The power Input is decreased by 40% compared to rated power input.
  - 60 is displayed on the display screen.
- 3 step : The power Input is decreased by 60% compared to rated power input.
  - 40 is displayed on the display screen.
- This function is available with Cooling Mode.
- Capacity may decrease when 4 modes is selected.
- Desired temperature is displayed about 5 seconds if you press FAN SPEED, ∧ or ∨ button.

10 **Clear**
Cancel Sleep and Timer settings. Also set the Diagnosis if held for 5 seconds (For remote type 1).

NOTE

- **Auto Restart** : If the air conditioner turns off due to a power outage, it will restart automatically once the power is restored, with the same settings as were set before the unit turned off.
- The remote control will not function properly if the AC infrared sensor is exposed to direct light or if there are obstacles between the remote controller and the air conditioner.
- Default temperature will be minimum 24 °C (in cooling cycle), when operated with remote control except power failure/power switched off.

Using the Light Off Function

You can set the brightness of the control panel,

- Press **Mode** button on the remote control for 3 seconds, or
- Press **Mode** and **Sleep** button button together on the control panel.

NOTE

- Turn on/off the control panel.

Using the Auto Clean Function

In the Cooling and Dry Mode, Moisture is generated inside the indoor unit. This function removes such moisture.

- Press **4-in-1** button on the remote control for 3 seconds. (For remote type 1), or
- Press **Sleep** button on the remote control for 3 seconds. (For remote type 2).
- or is displayed on the remote control.

NOTE

- If you turn off the unit, the fan continues to run for 10 minutes and cleans the inside of the indoor unit.

Wireless Remote Control

Inserting Batteries

If the display screen of the remote control begins to fade, replace the batteries. Insert AAA (1.5 V) batteries before using the remote control.

1 Remove the cover on the back of the remote control.

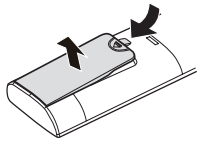

2 Insert the new batteries and make sure that the + and - terminals of the batteries are installed correctly.

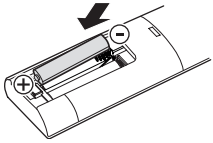

NOTE

- New batteries are supplied with the air conditioner for use in the remote control.
- Do not use a rechargeable battery. Make sure that the battery is new.
- In order to prevent discharge, remove the battery from the remote control if the air conditioner is not going to be used for an extended period of time.
- Keep the remote control away from extremely hot or humid places.
- To maintain optimal operation of the remote control, the remote sensor should not be exposed to direct sunlight.

Air Direction

Airflow can be adjusted by changing the direction of the air conditioner's louvers.

Adjusting Horizontal Airflow Direction

The horizontal airflow is adjusted by moving the levers of the vertical louvers to the left or right.

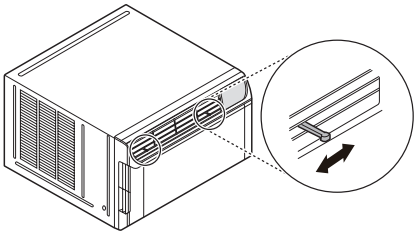

Adjusting Vertical Airflow Direction

Touch the horizontal louvers to adjust the airflow up or down.

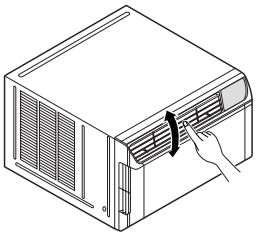

NOTE

- When the weather is extremely hot, the unit may turn off automatically to protect the compressor.

Slinger Fan

This air conditioner is equipped with a slinger fan. (See drawing.)

The fan's outer ring picks up the condensed water from the base pan if the water level gets high enough. The water is then picked up by the fan and expelled through the condenser, making the air conditioner more efficient.

LG ThinQ Application

This feature is only available on models with the or **ThinQ** logo

The **LG ThinQ** application allows you to communicate with the appliance using a smartphone.

LG ThinQ Application Features

Communicate with the appliance from a smartphone using the convenient smart features.

Smart Diagnosis

If you experience a problem while using the appliance,this smart diagnosis feature will help you diagnose the problem.

Settings

Allows you to set various options on the appliance and in the application.

NOTE

- If you change your wireless router, internet service provider, or password, delete the registered appliance from the **LG ThinQ** application and register it again.
- The application is subject to change for appliance improvement purposes without notice to users.
- Functions may vary by model.

Before Using LG ThinQ Application

1 Check the distance between the appliance and the wireless router (Wi-Fi network).
   - If the distance between the appliance and the wireless router is too far, the signal strength becomes weak. It may take a long time to register or installation may fail.

2 Turn off the **Mobile data** or **Cellular Data** on your smartphone.

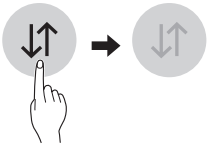

3 Connect your smartphone to the wireless router.

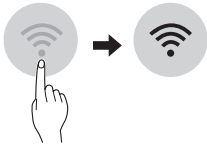

NOTE

- To verify the Wi-Fi connection, check that icon on the control panel is lit.
- The appliance supports 2.4 GHz Wi-Fi networks only. To check your network frequency, contact your Internet service provider or refer to your wireless router manual.
- **LG ThinQ** is not responsible for any network connection problems or any faults, malfunctions, or errors caused by network connection.
- If the appliance is having trouble connecting to the Wi-Fi network, it may be too far from the router. Purchase a Wi-Fi repeater (range extender) to improve the Wi-Fi signal strength.
- The Wi-Fi connection may not connect or may be interrupted because of the home network environment.
- The network connection may not work properly depending on the Internet service provider.
- The surrounding wireless environment can make the wireless network service run slowly.
- The appliance cannot be registered due to problems with the wireless signal transmission. Unplug the appliance and wait about a minute before trying again.
- If the firewall on your wireless router is enabled, disable the firewall or add an exception to it.
- The wireless network name (SSID) should be a combination of English letters and numbers. (Do not use special characters.)
- Smartphone user interface (UI) may vary depending on the mobile operating system (OS) and the manufacturer.
- If the security protocol of the router is set to **WEP**, you may fail to set up the network. Please change it to other security protocols (**WPA2** is recommended) and register the product again.

Installing the LG ThinQ Application

Search for the **LG ThinQ** application from the Google Play Store or Apple App Store on a smartphone. Follow instructions to download and install the application.

Open Source Software Notice Information

To obtain the source code under GPL, LGPL, MPL, and other open source licenses that have the obligations to disclose source code, that is contained in this product, and to access all referred license terms, copyright notices and other relevant documents please visit https://opensource.lge.com.

LG Electronics will also provide open source code to you on CD-ROM for a charge covering the cost of performing such distribution (such as the cost of media, shipping, and handling) upon email request to opensource@lge.com.

This offer is valid to anyone in receipt of this information for a period of three years after our last shipment of this product.

Smart Diagnosis

This feature is only available on models with the or logo.

Use this feature to help you diagnose and solve problems with your appliance.

NOTE

- For reasons not attributable to LGE's negligence, the service may not operate due to external factors such as, but not limited to, Wi-Fi unavailability, Wi-Fi disconnection, local app store policy, or app unavailability
- The feature may be subject to change without prior notice and may have a different form depending on where you are located.

Using LG ThinQ to Diagnose Issues

If you experience a problem with your Wi-Fi equipped appliance, it can transmit troubleshooting data to a smartphone using the **LG ThinQ** application.

- Launch the **LG ThinQ** application and select the **Smart Diagnosis** feature in the menu. Follow the instructions provided in the **LG ThinQ** application.

Using Audible Diagnosis to Diagnose Issues

Follow the instructions below to use the audible diagnosis method.

- Launch the **LG ThinQ** application and select the **Smart Diagnosis** feature in the menu. Follow the instructions for audible diagnosis provided in the **LG ThinQ** application.

1. Plug the power plug in the outlet properly.
2. Place the mouthpiece of your smartphone close to the or logo.
3. Press and hold the **DIAGNOSIS [5 s]** button for 5 seconds or longer while holding the smartphone mouthpiece to the logo until the data transfer is complete.
   - Keep the smartphone in place until the data transfer has finished. Time remaining for data transfer is displayed.
4. After the data transfer is complete, the diagnosis will be displayed in the application.

NOTE

- For best results, do not move the smartphone while the tones are being transmitted.
- Be sure to keep ambient noise to a minimum or the phone may not correctly receive the buzzer beeps from the indoor unit.

⚠ WARNING

- Before cleaning or performing maintenance, disconnect the power supply and wait until the fan stops.

Air Filter

Check the air filter at least twice a month to see if cleaning is necessary. Trapped particles in the filter can build up and block the airflow, reducing cooling capacity and causing an accumulation of frost on the evaporator.

Cleaning the Air Filter

1 Remove the air filter from the front grille by pulling the filter forward and then up slightly.

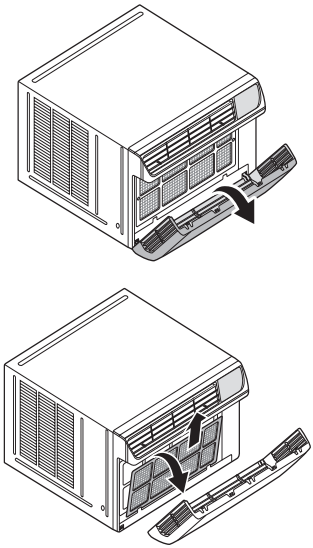

2 Wash the filter using lukewarm water below 40 °C (104 °F).

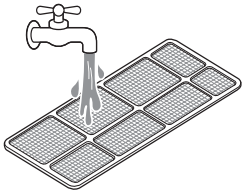

3 Gently shake the excess water from the filter.

4 Dry the filter in the shade.

5 Insert the filter into the Front grille.

Cleaning the Air Conditioner

- Wipe the front grille and inlet grille with a cloth dampened in a mild detergent solution.
- Wash the cabinet with mild soap or detergent and lukewarm water, then polish using liquid appliance wax.

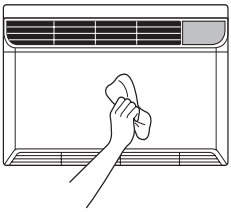

NOTE

- To ensure continued peak efficiency, the condenser coils (outside of unit) should be checked periodically and cleaned if clogged with soot or dirt from outside air.
- For repair and maintenance, contact a LG Electronics Customer Service Hotline. Have your model number and serial number available.

Before Calling for Service

The appliance is equipped with an automatic error-monitoring system to detect and diagnose problems at an early stage. If the appliance does not function properly or does not function at all, check the following before you call for service.

Normal Sounds You May Hear

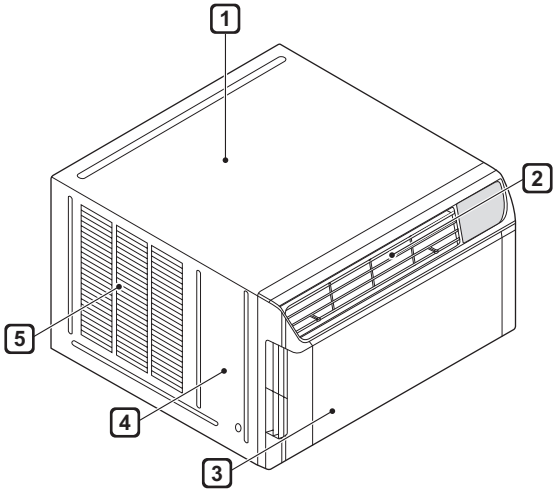

1 **High Pitched Chatter**
Today's high efficiency compressors may have a high pitched chatter during the cooling cycle.

2 **Sound of Rushing Air**
At the front of the unit, you may hear the sound of rushing air being moved by the fan.

3 **Gurgle/Hiss**
Gurgling or hissing noise may be heard due to refrigerant passing through evaporator during normal operation.

4 **Vibration**
Unit may vibrate and make noise because of poor wall or window construction or incorrect installation.

5 **Pinging or Swishing**
Droplets of water hitting condenser during normal operation may cause pinging or swishing sounds.

Problem	Possible Causes & Corrective Action
Air conditioner does not start.	**The air conditioner is unplugged.** • Make sure the air conditioner plug is pushed completely into the outlet.
	The fuse is blown/circuit breaker is tripped. • Check the house fuse/circuit breaker box and replace the fuse or reset the breaker.
	Power failure. • If power failure occurs, turn the mode control to off. When power is restored, wait 3 minutes to restart the air conditioner to prevent tripping of the compressor overload.
Air conditioner does not cool as it should.	**Airflow is restricted.** • Make sure there are no curtains, blinds, or furniture blocking the front of the air conditioner.
	The temp control may not be set correctly. • Set the desired temperature to a level lower than the current temperature.
	The air filter is dirty. • Clean the filter at least every 2 weeks. See the ‘MAINTENANCE (Cleaning the Air Filter)’ section.
	The room may have been hot. • When the air conditioner is first turned on, you need to allow time for the room to cool down.
	Cold air is escaping. • Check for open fumace floor registers and cold air returns.
	Cooling coils have iced up. • See ‘Air conditioner freezing up’ below.
Air conditioner freezing up.	**The cooling coils are iced over.** • Ice may block the air flow and obstruct the air conditioner from properly cooling the room. Set the Fan Speed High at Fan or Cool mode.
Water drips outside.	**Hot, humid weather.** • This is normal.

Problem	Possible Causes & Corrective Action
Water drips Indoors.	**The air conditioner is not tilted to the outside.** • For proper water disposal, make sure the air conditioner slants slightly from the cabinet front to the rear.
Water collects in base pan.	**Moisture removed from air and drains into base pan.** • This is normal for a short period in areas with little humidity; normal for a longer period in very humid areas.
Air conditioner turns on and off rapidly.	**Dirty air filter - air restricted.** • Clean air filter.
	Outside temperature extremely hot. • Refer to installation instructions or check with installer.
Noise when unit is cooling.	**Air movement sound.** • This is normal. If too loud, set to lower FAN Speed.
	Window vibration - poor installation. • Refer to installation instructions or check with installer.
Room too cold.	**Set temperature too low.** • Increase set temperature.
Can’t connect the LG ThinQ App. to the air conditioner.	**Air conditioner is turned off.** • Turn the air conditioner on.
	Wireless router is turned off. • Turn the router on.
The air conditioner is not connecting to the Wi-Fi.	**The Wi-Fi router is too far from the air conditioner.** • Move the router closer to the air conditioner or purchase and install a Wi-Fi repeater (signal booster).
	You do not have permission to use the router or it is incompatible. • Make sure you are selecting the correct wireless router from the list. The router must be set to 2.4 GHz.

Problem	Possible Causes & Corrective Action
Your home appliance and smartphone is not connected to the Wi-Fi network.	**The password for the Wi-Fi that you are trying to connect to is incorrect.** • Find the Wi-Fi network connected to your smartphone and remove it, then register your appliance on LG ThinQ.
	Mobile data for your smartphone is turned on. • Turn off the **Mobile data** of your smartphone and register the appliance using the Wi-Fi network.
	The wireless network name (SSID) is set incorrectly. • The wireless network name (SSID) should be a combination of English letters and numbers. (Do not use special characters.).
	The router frequency is not 2.4 GHz. • Only a 2.4 GHz router frequency is supported. Set the wireless router to 2.4 GHz and connect the appliance to the wireless router. To check the router frequency, check with your Internet service provider or the router manufacturer.
	The distance between the appliance and the router is too far. • If the distance between the appliance and the router is too far, the signal may be weak and the connection may not be configured correctly. Move the location of the router so that it is closer to the appliance.

LG
Life's Good

LG 24 x 7 CUSTOMER CARE

CALL 1800-315-9999
1800-180-9999
(Toll Free)

SMS 5757554
(Send SMS)

CLICK www.lg.com/in/support

LG WhatsApp No.
9711709999

MOBILE APP LG Service India Mobile App
Available at Google Play

www.facebook.com/lghomeappliances

www.twitter.com/LGIndia

To know more about LG,
visit www.lg.com/in

For Corporate/Institutional enquiries,
please write to corp.enquiries@lge.com

Regd. Office: LG Electronics India Pvt. Ltd., A-24/6, Mohan Cooperative Industrial Estate, Mathura Road, New Delhi-110044 CIN NO. U32107DL1997PTC220109