OWNER'S MANUAL

HIGH POWER SPEAKER SYSTEM

Please read this manual carefully before operating your set and retain it for future reference.

MODEL

RL2

MFL71382203
1901_Rev01

www.lg.com

Copyright © 2019 LG Electronics Inc. All Rights Reserved.

Safety Information

CAUTION

RISK OF ELECTRIC SHOCK DO NOT OPEN

CAUTION: TO REDUCE THE RISK OF ELECTRIC SHOCK DO NOT REMOVE COVER (OR BACK) NO USER-SERVICEABLE PARTS INSIDE REFER SERVICING TO QUALIFIED SERVICE PERSONNEL.

This lightning flash with arrowhead symbol within an equilateral triangle is intended to alert the user to the presence of uninsulated dangerous voltage within the product's enclosure that may be of sufficient magnitude to constitute a risk of electric shock to persons.

The exclamation point within an equilateral triangle is intended to alert the user to the presence of important operating and maintenance (servicing) instructions in the literature accompanying the product.

WARNING: TO PREVENT FIRE OR ELECTRIC SHOCK HAZARD, DO NOT EXPOSE THIS PRODUCT TO RAIN OR MOISTURE.

CAUTION: The apparatus should not be exposed to water (dripping or splashing) and no objects filled with liquids, such as vases, should be placed on the apparatus.

WARNING: Do not install this equipment in a confined space such as a book case or similar unit.

CAUTION: Do not use high voltage products around this product. (ex. Electrical swatter) This product may malfunction due to electrical shock.

CAUTION: Do not block any ventilation openings. Install in accordance with the manufacturer's instructions.
Slots and openings in the cabinet are provided for ventilation and to ensure reliable operation of the product and to protect it from over heating. The openings shall never be blocked by placing the product on a bed, sofa, rug or other similar surface. This product should not be placed in a built-in installation such as a bookcase or rack unless proper ventilation is provided or the manufacturer's instruction has been adhered to.

NOTICE: For safety marking information including product identification and supply ratings, please refer to the main label on the bottom or the other surface of the product.

CAUTION concerning the Power Cord

The Power Plug is the disconnecting device. In case of an emergency, the Power Plug must remain readily accessible.

Check the specification page of this owner's manual to be certain of the current requirements.

Do not overload wall outlets. Overloaded wall outlets, loose or damaged wall outlets, extension cords, frayed power cords, or damaged or cracked wire insulation are dangerous. Any of these conditions could result in electric shock or fire. Periodically examine the cord of your device, and if its appearance indicates damage or deterioration, unplug it, discontinue use of the device, and have the cord replaced with an exact replacement part by an authorized service center. Protect the power cord from physical or mechanical abuse, such as being twisted, kinked, pinched, closed in a door, or walked upon. Pay particular attention to plugs, wall outlets, and the point where the cord exits the device.

CAUTION: The ventilation should not be impeded by covering the ventilation openings with items, such as newspapers, table-cloths, curtains, etc.

CAUTION: The apparatus could be used in tropical and moderate climates.

CAUTION: The MAINS plug or the appliance coupler is used as the disconnect device, the disconnect device shall remain readily operable.

CAUTION: No naked flame sources, such as lighted candles, should be placed on the apparatus.

Symbols

~	Refers to alternating current(AC).
⎓	Refers to direct current(DC).
⧈	Refers to class II equipment.
⏻	Refers to stand-by.
I	Refers to “ON” (power).
ϟ	Refers to dangerous voltage.

Precautions on handling a battery

- This unit has a built-in valve regulated lead-acid rechargeable battery. (12 V/7.0 Ah)
- Do not use the battery in a closed room or near fire.
- Charge the battery under the charging condition specified.
- If any corrosion of the terminals, leakage or deformation of the case of the battery is found, do not use the battery.
- If the battery leaks, while protecting your hands or clothing, remove the battery from the device and should be extremely careful not to infect the skin or eyes.
- If the battery leaks and the liquid inside spills on the skin or clothing, immediately wash it off with plenty of clean water.
  If the liquid splashes into eyes, immediately flush the eyes with plenty of clean water and consult a doctor.
- Avoid mixed usage of batteries differing in type, manufacturer or history of use.
- Do not throw the battery in fire nor heat the battery.
- Do not short of battery terminals.
- Do not attempt to disassemble, remodel or destroy the battery.
- Do not place the battery near a child.
- The battery can be replaced. If you need to charge your battery more and more frequently, it might be time to replace it. The battery should be serviced by LG Electronics customer care center.
- Charge fully before storing a battery which has not been in use for a long period and turn ON/OFF switch off (OFF). Store the battery in a cool, dry place.
- During storage of the battery, charge it at least once every three months. If the battery is stored for a long period without being charged, its battery life may be shortened.
- The used battery must be recycled or disposed of separately from household waste.

Table of Contents

1 Getting Started

2 Safety Information
4 – Precautions on handling a battery
6 Unique Features
6 Playable file Requirement
6 – Music file requirement
6 – Compatible USB Devices
6 – USB device requirement
7 Top Panel
8 Rear Panel
9 Carrying the unit
10 Charging Battery

2 Connecting

11 AC Power Cord Connection
12 Optional Equipment Connection
12 – AUX IN Connection
12 – USB Connection

3 Operating

13 Basic Operations
13 – USB Operations
14 Using BLUETOOTH® wireless technology
14 – Listening to music stored on the Bluetooth devices
17 Radio Operations
17 – Listening to the radio
17 – Presetting the Radio Stations
17 – Deleting all the saved stations
18 Sound adjustment
18 – Setting the sound mode
19 Other Operations
19 – Using Microphone
21 – LIGHTING
22 – Auto power down
22 – Auto function change

4 Troubleshooting

23 Troubleshooting
23 – General

5 Appendix

24 General specifications
25 Maintenance
25 – Handling the Unit
25 Trademarks and Licenses

Unique Features

BLUETOOTH®

Listens to music stored on your **Bluetooth** device.

Carrying the unit

The unit has wheels and a handle so you can easily move the unit.

Playable file Requirement

Music file requirement

MP3/WMA file compatibility with this unit is limited as follows.

- Sampling frequency : within 32 to 48 kHz (MP3), within 32 to 48 kHz (WMA)
- Bit rate : within 32 to 320 kbps (MP3), 40 to 192 kbps (WMA)
- Maximum files : 999
- Maximum folders : 99
- File extensions : ".mp3"/ ".wma"
- Certain MP3/WMA files may not be played depending on the type or format of the file.

Compatible USB Devices

- MP3 Player : Flash type MP3 player.
- USB Flash Drive :
  Devices that support USB2.0 or USB1.1.
- The USB function of this unit does not support all USB devices.

USB device requirement

- Devices which require additional program installation when you have connected it to a computer, are not supported.
- Do not extract the USB device while in operation.
- For a large capacity USB, it may take longer than a few minute to be searched.
- To prevent data loss, back up all data.
- If you use a USB extension cable or USB hub, the USB device is not recognized.
- Using NTFS file system is not supported. (Only FAT(16/ 32) file system is supported.)
- This unit recognizes up to 999 files.
- External HDD, SSD, Card readers, Locked devices, or hard type USB devices are not supported.
- USB port of the unit cannot be connected to PC. The unit cannot be used as a storage device.
- Some USB may not work with this unit.

Top Panel

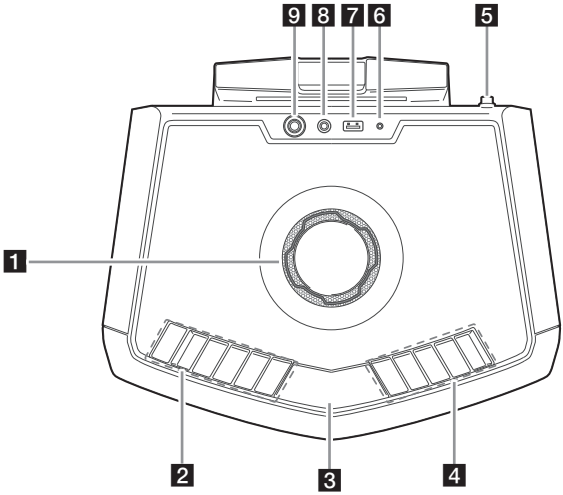

1 **MASTER VOLUME / MULTI JOG**
- Adjusts speaker volume.
- Selects vocal effects.

2 ⏻ (Standby)
Turns the power on or off.

MIC (Microphone) **VOL.** (Volume)
Adjusts microphone volume with **MASTER VOLUME / MULTI JOG**.

VOCAL EFFECTS
Selects various vocal effects mode.

MIC ECHO / VOICE CANCELLER
- Selects ECHO mode.
- You can reduce the vocal tones during music playback from various input sources by pressing and holding.

KEY CHANGER
Changes the key to suit your vocal range with **MASTER VOLUME / MULTI JOG**.

LIGHTING
Selects the lighting mode.

3 Display window

4 **F** (Function)
Selects the function and input source.

Input source / Function	Display
USB	USB
AUX (3.5 mm) input	AUX
Bluetooth	BT
Radio	FM

⏮/⏭ (Skip/Search)
- Skips backward or forward.
- Searches for a section within a file.
- Selects the radio stations.

⏯ (Play/Pause) **PRESET**
- Starts or pauses playback.
- Chooses a preset number for a radio station.
- Stores radio stations.

SOUND EFFECT / REPEAT
- Chooses sound impressions.
- Listens to your files repeatedly or randomly by pressing and holding.

5 FM antenna

6 **BATTERY**
Battery charging indicator

7 USB port
You can play sound files by connecting the USB device.

8 **AUX IN**
Connects a portable device.

9 **MIC** (Microphone) jack
Connects a microphone.

Rear Panel

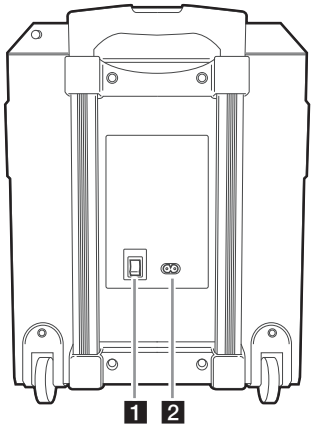

1 Power ON/OFF switch
Switches the unit ON or OFF.
(Battery can be charged even when this unit is in off (OFF) status.)

2 AC in socket

Note

Fully charge the device before using.

Carrying the unit

The unit has wheels and a handle so you can easily move the unit.

1. Press the lock button on the handle.

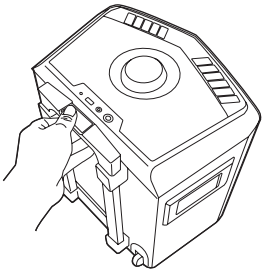

2. Pull the handle up.

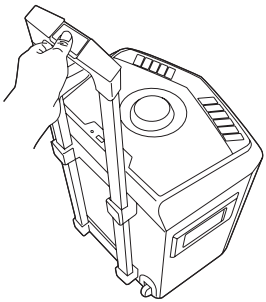

3. Release the lock button to lock the handle in place.

Note

To retract the handle, press the button and push down.

Caution

- Do not shake the handle to hard. Otherwise it may result in the unit will be damaged.
- Do not hang heavy things on the handle. Otherwise it may result in the unit will be damaged.
- Do not draw the unit on the unpaved road or the stair.
- Be careful it does not drop the unit when you carry it.
- Carry the unit, after then disconnect the connected cables.
- Do not step or sit on the unit. Otherwise this unit may fall down and causing personal injury.
- Do not place the unit on an unstable position and place the unit at a safe distance from the child's reach.
- Be careful that the unit should not fall down. Otherwise it may result in malfunction and causing personal injury and/ or property damage.
- Fix the handle when you use the unit.

Charging Battery

This unit has a built-in battery.

- By connecting AC power, battery will start charging.
- If Battery charging indicator is in red, this means that battery is charging now.
- If the battery charging indicator is in green, this means that battery charging is completed. For efficient performance of battery, it is recommended fully charging the device until the green LED goes off.
- Charge battery for about 9 hours before you start using this unit for the first time.

Note

- Operating time is approx. 15 hours. (Based on fully charging the battery and continuous playback using 50 % volume level.) It may vary depending on the battery status and operational conditions.
- If you are listening to the music while charging, it will take longer to charge.
- Charge the battery fully during the recommended time after discharge.

Useful functions for using the unit

Function	Description	To do	Do this
BT Lock On/Off (Page 16)	It allows you to connect a **Bluetooth** device only on BT (**Bluetooth**) functions. Initial setting of this function was set to off.	ON	Press and hold ⏯ **PRESET** for 5 seconds in BT (**Bluetooth**) function.
		OFF	Press and hold ⏯ **PRESET** for 5 seconds in BT (**Bluetooth**) function.

AC Power Cord Connection

1. Connect one end of the AC power cord (included) to the AC IN socket.
2. Plug the other end into the wall outlet.

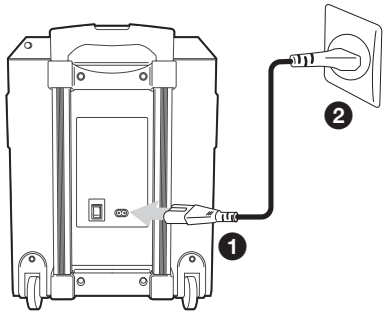

3. Turn ON/OFF Switch on (ON).

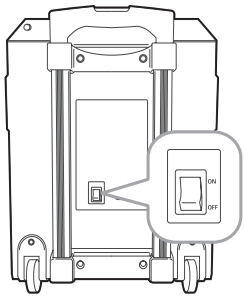

Note

- When you turn ON/OFF Switch on (ON), this unit turns on even if this unit has been turned off. If the battery level is very low, this unit does not turn on even if you turn ON/OFF switch on (ON).
- When the battery level is low, this unit displays LOW BATTERY frequently. And if the battery level becomes even lower, this unit turns off automatically.
- Previous setting may not be saved when you turn ON/OFF switch off (OFF).
- Previous setting may not be saved when the unit's power is shut off due to low battery.
- Unplug the AC power cord from the wall outlet if you do not to use for an extended period of time.

Optional Equipment Connection

AUX IN Connection

Connect an output (earphone or line out) of portable device (MP3 or PMP etc) to the **AUX IN** (3.5 mm) connector.

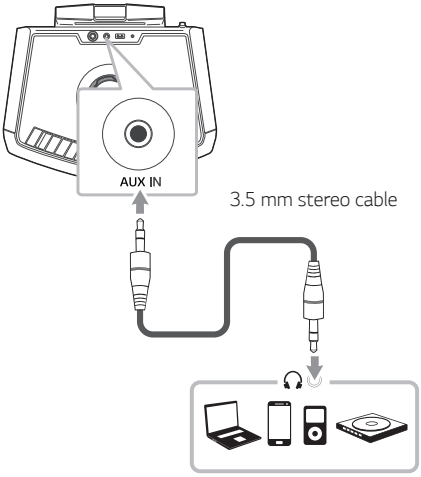

Listening to music from your portable player

The unit can be used to play the music from many types of portable player.

1. Connect the portable player to the **AUX IN** connector of the unit.
2. Turn the power on by pressing ⏻.
3. Press **F** to select AUX function.
4. Turn on the portable player and start it playing.

Note

Automatically switches to the AUX function when you connect the portable device to the **AUX IN** connector.

USB Connection

Connect a USB device (or MP3 player, etc.) to the USB ports on the unit.

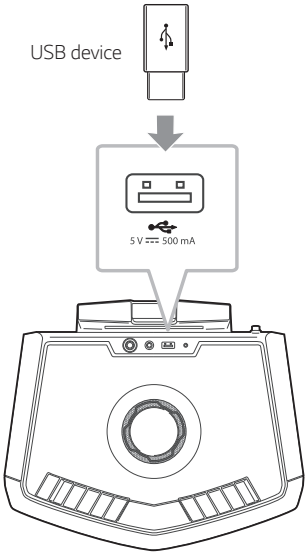

Note

Removing the USB device from the unit :

1. Choose a different function/mode.
2. Remove the USB device from the unit.

Basic Operations

USB Operations

1. Connect the USB device to the USB port.
2. Select USB function by pressing **F**.

To	Do this
Playback	Press ⏯ **PRESET**.
Pause	Press ⏯ **PRESET** during playback.
Searching for a section within a file	Press and hold ⏮/⏭ during playback and release it at the point you want to listen to.
Skipping to the next/ previous file	Press ⏭ to go to the next file. Playing less than 3 seconds, press ⏮ to go to the previous file. Playing after 3 seconds, press ⏮ to go to the beginning of the file.
Playing repeatedly or randomly	Press and hold **SOUND EFFECT / REPEAT** repeatedly. Refer to the note for details about the display change.

Caution

- Do not extract the USB device during operation. (play, etc.)
- Regular back up is recommended to prevent data loss.

Note

- Repeat/Shuffle playback operates as follows.

On Display	Description
OFF	Plays songs in order and stops the playback.
ONE	Plays a same song repeatedly.
ALL	Plays all the songs repeatedly.
SHUFFLE	Plays all the songs once randomly, and stops the playback.

- Even after restarting the unit or switching one function to another, you can listen to music from the point where it's last been played.
- USB Folders/Files are recognized as below.

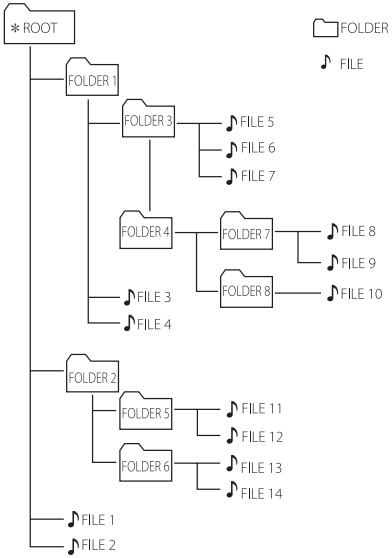

- File will be played from ♪ file No.1 to ♪ file No.14 one by one.
- Files will be presented in order recorded and may be presented differently according to the record circumstances.

*ROOT : The first screen you can see when a computer recognize the USB is "ROOT".

Using BLUETOOTH® wireless technology

About Bluetooth

Bluetooth is wireless communication technology for short range connection.

The sound may be interrupted when the connection interfered by the other electronic wave or you connect the **Bluetooth** in the other rooms.

Connecting individual devices under **Bluetooth** wireless technology does not incur any charges. A mobile phone with **Bluetooth** wireless technology can be operated via the Cascade if the connection was made via **Bluetooth** wireless technology.

- Available Devices : Smart phone, MP3, Notebook, etc.
- Version : 4.0
- Codec : SBC

Bluetooth Profiles

In order to use **Bluetooth** wireless technology, devices must be able to interpret certain profiles. This unit is compatible with following profile.

A2DP (Advanced Audio Distribution Profile)

Listening to music stored on the Bluetooth devices

Pairing your unit and Bluetooth device

Before you start the pairing procedure, make sure the **Bluetooth** feature is activated on your **Bluetooth** device. Refer to your **Bluetooth** device's user guide. Once a pairing operation is performed, it does not need to be performed again.

1. Turn on the unit.

Note

When **Bluetooth** connection lock is activated, you can search **Bluetooth** device in BT function.

2. Operate the **Bluetooth** device and perform the pairing operation. When searching for this unit with the **Bluetooth** device, a list of the devices found may appear in the **Bluetooth** device display depending on the type of **Bluetooth** device. Your unit appears as "LG - RL2(XX)".

Note

- XX means the last two digits of **Bluetooth** address. For example, if your unit has a **Bluetooth** address such as 9C:02:98:4A:F7:08, you will see "LG - RL2(08)" on your **Bluetooth** device.
- Depending on the **Bluetooth** device type, some devices have a different pairing way. For details about **Bluetooth** pairing, refer to your **Bluetooth** device manual.
- You can connect this unit with up to 3 **Bluetooth** devices simultaneously using the same method as described above, only in the **Bluetooth** function.
- The multi phone pairing connection is only supported on Android devices. (Multi phone pairing connection may not be supported depending on the connected device specifications.)
- Removable/detachable **Bluetooth** devices (Ex: Dongle etc.) will not support multi phone pairing.

3. When this unit is successfully connected with your **Bluetooth** device, "PAIRED" appears on the display window and change to **Bluetooth** device name soon. Then "BT" will appear on the display window.

Note

- "PAIRED" will momentarily appear on the display when you connect other devices for multi phone pairing.
- If the device name is unavailable, "_" will be displayed.

4. Listen to music.
   To play a music stored on your **Bluetooth** device, refer to your **Bluetooth** device's user guide.

Note

- When using **Bluetooth** technology, you have to make a connection between the unit and the **Bluetooth** device as close as possible and keep the distance.
  However, it may not work well in certain situations as described below :
  - There is a obstacle between the unit and the **Bluetooth** device.
  - There is a device using same frequency with **Bluetooth** technology such as a medical equipment, a microwave or a wireless LAN device.
- If **Bluetooth** connection does not work well, try pairing it again.
- Even if this unit is connected to up to 3 **Bluetooth** devices in the **Bluetooth** mode, you can play and control music by using only one of the connected devices.

Note

- The sound may be interrupted when the connection has interference from other electronic devices.
- Depending on the type of the device, you may not be able to use the **Bluetooth** function.
- You can enjoy wireless system using phone, MP3, Notebook, etc.
- The more distance between the unit and the **Bluetooth** device, the lower the sound quality becomes.
- **Bluetooth** connection will be disconnected when the unit is turned off or the **Bluetooth** device gets too far from the unit.
- When **Bluetooth** connection is disconnected, connect the **Bluetooth** device to the unit again.
- When a **Bluetooth** device is not connected, "READY" appears on the display window.
- When you use the BT(**Bluetooth**) function, adjust the volume to a proper level on the **Bluetooth** device.
- When entering the **Bluetooth** function, this unit automatically connects to the last connected **Bluetooth** device or the device which played back last.
  (Auto connection may not be supported depending on the connected device specifications.)

Controls connected Bluetooth device

You can control connected **Bluetooth** device by the unit; play, pause, skip.

Note

- Only Android OS and iOS is available to use this function.
- This function may not be supported depending on the **Bluetooth** device, or operated differently.

Bluetooth connection lock (BT LOCK)

You can limit **Bluetooth** connection to only BT (**Bluetooth**) function to prevent unintended **Bluetooth** connections.

To turn this function on, press and hold ⏯ PRESET for about 5 seconds in BT (**Bluetooth**) function. "ON-BT LOCK" appears then you can limit **Bluetooth** connection.

To turn this function off, press and hold ⏯ PRESET for about 5 seconds in BT (**Bluetooth**) function. "OFF-BT LOCK" appears.

Radio Operations

Pull the FM antenna out and adjust the angle and direction for better reception.

Listening to the radio

1. Press **F** on the unit until FM appears in the display window.
   The last received station is tuned in.
2. Auto tuning :
   Press and hold **⏮ / ⏭** until the frequency indication starts to change, then release. Scanning stops when the unit tunes in a station.

   Or

   Manual tuning :
   Press **⏮ / ⏭** repeatedly.
3. Adjust the volume by rotating **MASTER VOLUME / MULTI JOG** knob repeatedly.

Presetting the Radio Stations

You can preset 10 stations for FM.
Before tuning, make sure to turn down the volume.

1. Press **F** until FM appears in the display window.
2. Select the desired frequency by pressing **⏮ / ⏭**.
3. Press and hold **⏯ PRESET**. A preset number will blink in the display window.
4. Press **⏮ / ⏭** to select the preset number you want.
5. Press **⏯ PRESET**.
   The station is stored.
6. Repeat steps 2 to 5 to store other stations.
7. To listen a preset station, press **⏯ PRESET**.

Deleting all the saved stations

1. Press and hold **⏯ PRESET** for five seconds.
   "DEL", "ALL" will flash up alternately on the unit display.
   - If there is no saved radio stations, it displays NONE.
2. Press **⏯ PRESET** to erase all the saved radio stations.
   "DELETED ALL" will scroll on the unit display.

Sound adjustment

Setting the sound mode

This system has a number of pre-set equalizers. The displayed items for the equalizer may be different depending on sound sources and effects.

You can select a desired sound mode by using **SOUND EFFECT / REPEAT**.

On Display	Description
BASS (BASS BLAST) or BASS+ (BASS BLAST+)	Reinforces the bass and powerful sound.
POP CLASSIC ROCK JAZZ	This program lends an enthusiastic atmosphere to the sound, giving you the feeling you are at an actual rock, pop, jazz or classic concert.
STANDARD	You can enjoy optimized sound.

Other Operations

Using Microphone

1. Connect your microphone to the MIC jack.
2. Play the music you want.
3. Sing along with the accompaniment. Adjust the microphone volume by pressing **MIC VOL.** and rotating **MASTER VOLUME / MULTI JOG** clockwise or counterclockwise.

Note

- When not using the microphone, set the MIC volume to minimum or turn off the MIC and remove the microphone from the MIC jack.
- If the microphone is set too near the speaker, a howling sound may be produced. In this case, move the microphone away from the speaker or decrease the sound level by pressing **MIC VOL.** and rotating **MASTER VOLUME / MULTI JOG**.
- If sound through the microphone is extremely loud, it may be distorted. In this case, press **MIC VOL.** and rotate **MASTER VOLUME / MULTI JOG**.
- You can give an echo effect to the sound from the microphones by pressing **MIC ECHO / VOICE CANCELLER**.

VOICE CANCELLER

You can reduce the vocal tones during music playback from various input sources.

Press and hold **MIC ECHO / VOICE CANCELLER** and "ON - VOICE CANCELLER" will appear in display window.

To cancel it, press and hold **MIC ECHO / VOICE CANCELLER** again.

The quality of the VOICE CANCELLER may be different depending on the recording conditions of music files.

Note

- This function is available in the USB or BT (**Bluetooth**) Function.
- If the function is not available, "NOT SUPPORT" appears in the display window.
- This function is available to use only when a microphone is connected.
- If a microphone is not connected, "INSERT MIC" is scrolled in the display window.
- It is not available on the mono source.
- To initialize it, change the function or disconnect the microphone.
- This function may not be initialized depending on the status of connected devices.

KEY CHANGER

You can adjust the key to 9 steps (4 steps higher, 4 steps lower and the original key).

To adjust the key much higher or lower, press **KEY CHANGER**.

- To make the key more sharp (**#**), one by one, rotate the **MASTER VOLUME / MULTI JOG** clockwise during playback.
- To make the key more flatten (**♭**), one by one, rotate the **MASTER VOLUME / MULTI JOG** counterclockwise during playback.

Note

- This function is available in the USB or BT (**Bluetooth**) function.
- To initialize it, change the function, disconnect the microphone.
- This function may not be initialized depending on the status of connected devices.
- If the function is not available, "NOT SUPPORT" appears in the display window.
- If a microphone is not connected, "INSERT MIC" appears in the display window.

VOCAL EFFECTS

When you connect your microphone to the MIC jack, you can enjoy karaoke function by changing voice in the various source.

To select various vocal mode effects, pressing **VOCAL EFFECTS** repeatedly or pressing **VOCAL EFFECTS** and then turning **MASTER VOLUME / MULTI JOG** on the unit when vocal effects mode appears in the display window.

BASS → SOPRANO → HELIUM → ROBOT → DUET MAN → DUET WOMAN → BASS ECHO1 → SOPRANO ECHO1 → HELIUM ECHO1 → ROBOT ECHO1 → DUET MAN1 → DUET WOMAN1 → BASS ECHO2 → SOPRANO ECHO2 → HELIUM ECHO2 → ROBOT ECHO2 → DUET MAN2 → DUET WOMAN2 → OFF

Note

- If a microphone is not connected, "INSERT MIC" appears in the display window.
- If you press **KEY CHANGER** or **MIC ECHO / VOICE CANCELLER** on VOCAL EFFECTS mode, after backing up current VOCAL EFFECTS, turn off VOCAL EFFECTS mode and operate KEY CHANGER or ECHO mode.
- To turn off VOCAL EFFECTS mode, press and hold **VOCAL EFFECTS**.

ECHO

When you connect your microphone to the MIC jack, you can give an echo effect to the sound from the microphones by pressing **MIC ECHO / VOICE CANCELLER**.

ECHO 1 → ECHO 2 → OFF

Note

- If a microphone is not connected, "INSERT MIC" appears in the display window.
- If you press **VOCAL EFFECTS** button on ECHO mode, afters backing up current ECHO, turn off ECHO mode and operate VOCAL EFFECTS mode.
  To operate ECHO mode, press **MIC ECHO / VOICE CANCELLER** again, after backing up current VOCAL EFFECTS.

LIGHTING

This function offers a party atmosphere by operating the lighting on the unit.

To select mode, pressing **LIGHTING** repeatedly.

PARTY → WATER → FOREST → OFF

Note

- Lighting function is available in all functions.
- Lighting mode retains in its previous mode when you first press **LIGHTING**, press again to change modes.
- Do not look directly at the light emitting part when the LIGHTING is turned on.
- If the illumination brightness is glaring, switch on the room lights or turn off the **LIGHTING**.
- To turn off LED lightning, press and hold **LIGHTING** for 3 seconds.

Auto power down

This unit will turn itself off to save electricity in the case were the main unit is not connected to an external device and is not used for 15 minutes.
The unit will also turns itself off after six hours if the main unit has been connected to another device using the analog inputs.

Auto function change

This unit recognizes input signals such as BT(**Bluetooth**) and AUX then automatically changes to the suitable function.

When you try to connect Bluetooth device

When you try to connect your **Bluetooth** device to this unit, **Bluetooth** function is selected.
Play your music on the **Bluetooth** device.

When AUX IN (3.5 mm stereo cable) is connected

When you connect the portable device to the **AUX IN** connector, AUX function is selected.
Play your music on the portable device.

Note

- This function only works with devices that were previously connected.
- If the **Bluetooth** connection lock function is set, **Bluetooth** connection will be only available on **Bluetooth** function. (page 16)

Troubleshooting

General

Problem	Cause & Solution
The unit does not work properly.	• Turn off the power of this unit and the connected external device (TV, Woofer, DVD-player, Amplifier, etc.) and turn them on again. • Disconnect the power cord of this unit and the connected external device (TV, Woofer, DVD-player, Amplifier, etc.) and then try connecting again. • Previous setting may not be saved when device power is shut off. • Turn ON/OFF switch off (OFF) and on (ON).
No Power	• The battery is discharged. Recharge the battery. • Check whether the ON/OFF switch is on (ON). • The power cord is not plugged in. Plug in the power cord. • Check whether electricity failed. Check the condition by operating electronic devices using the same AC outlet.
No sound.	• Check whether you select right function. Press function button and check if you have selected the right function.
Radio stations cannot be tuned in properly.	• The antenna is positioned poorly. Adjust the angle and direction for better reception. • The signal strength of the radio station is too weak. Tune to the station manually. • No stations have been preset or preset stations have been cleared (when tuning by scanning preset channels). Preset some radio stations, see page 17 for details.
No speaker light	• Check the light effects by pressing **LIGHTING** (Page 21).

General specifications

General	
Power requirements	Refer to the main label on the unit.
Power consumption	Refer to the main label on the unit.
Dimensions (W x H x D)	Approx. 353 mm x 420 mm x 292 mm
Operating temperature	5 °C to 35 °C
Operating humidity	60 %

Inputs	
Portable in (AUX IN)	2.0 Vrms (3.5 mm stereo jack) x 1
Microphone (MIC)	Sensitivity 20 mV (1 kHz), 6.3 mm jack x 1

Tuner	
FM Tuning Range	87.5 to 108.0 MHz or 87.50 to 108.00 MHz

System	
Frequency Response	40 to 20,000 Hz
Signal-to-noise ratio	More than 75 dB
Dynamic range	More than 80 dB
Bus Power Supply (USB)	5 V ⎓ 500 mA

Amplifier (RMS Output power)	
Total output	50 W RMS (4 Ω at 1 KHz, 10 % THD)

Battery	
Battery type	12 V/7.0 Ah (Valve Regulated Lead-Acid rechargeable battery)
Operating time	Approx. 15 hours (Based on fully charging the battery and continuous playback using 50 % volume level.) It may vary depending on the battery status and operational conditions.
Charging time	Approx. 9 hours It may vary depending on the battery status and operational conditions.

- Design and specifications are subject to change without notice.

Maintenance

Handling the Unit

When shipping the unit

Please save the original shipping carton and packing materials. If you need to ship the unit, for maximum protection, re-pack the unit as it was originally packed at the factory.

Keeping the exterior surfaces clean

Do not use volatile liquids such as insecticide spray near the unit. Wiping with strong pressure may damage the surface. Do not leave rubber or plastic products in contact with the unit for a long period of time.

Cleaning the unit

To clean the player, use a soft, dry cloth. If the surfaces are extremely dirty, use a soft cloth lightly moistened with a mild detergent solution. Do not use strong solvents such as alcohol, benzine, or thinner, as these might damage the surface of the unit.

Trademarks and Licenses

The **Bluetooth®** word mark and logos are registered trademarks owned by the Bluetooth SIG, Inc. and any use of such marks by LG Electronics is under license. Other trademarks and trade names are those of their respective owners.

LG

Life's Good