LG

MFL72063753 2404REV01

43NANO81* 65NANO81*
50NANO81* 75NANO81*
55NANO81* 86NANO81*





www.lg.com

Printed in Korea
Imprimé en Corée

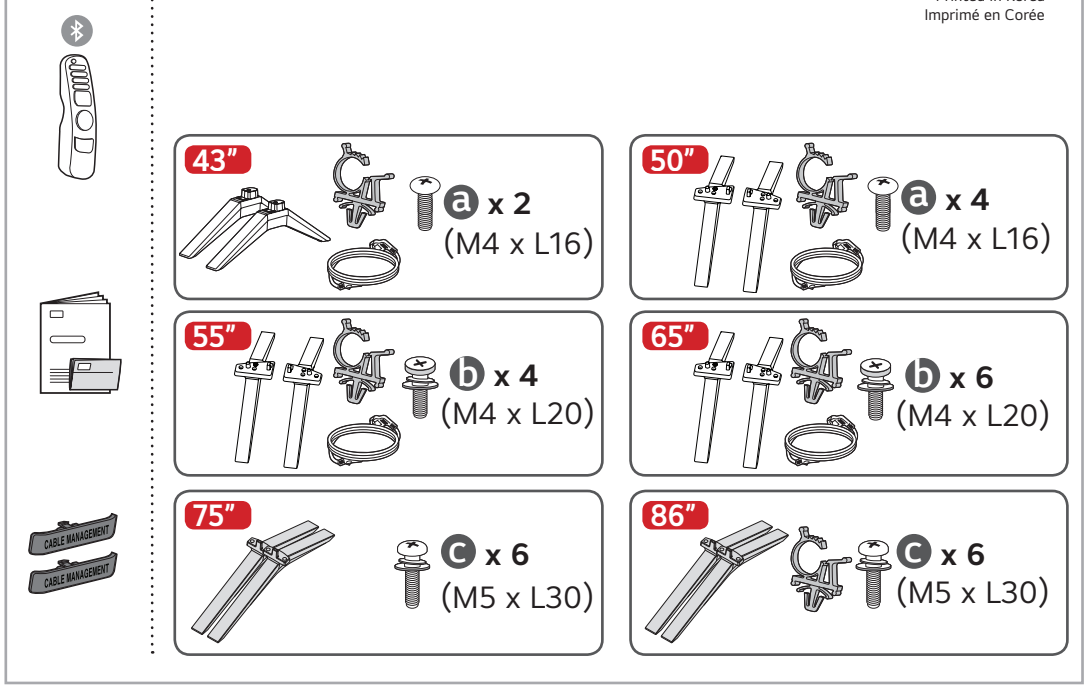

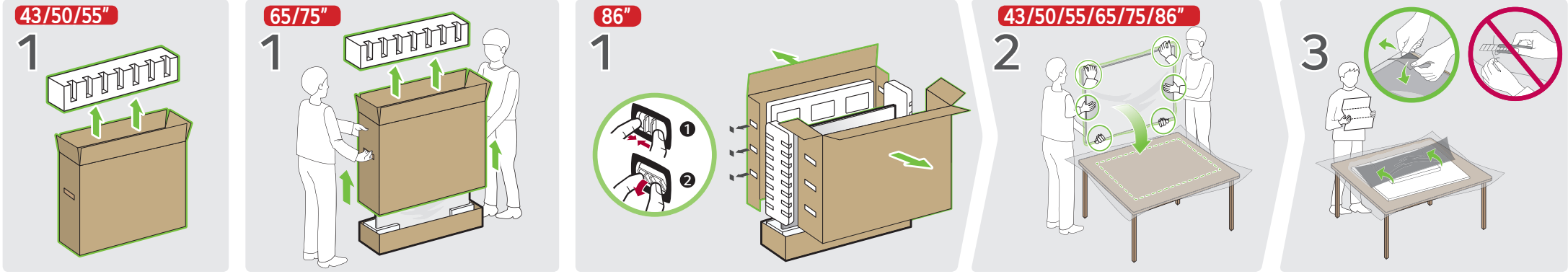

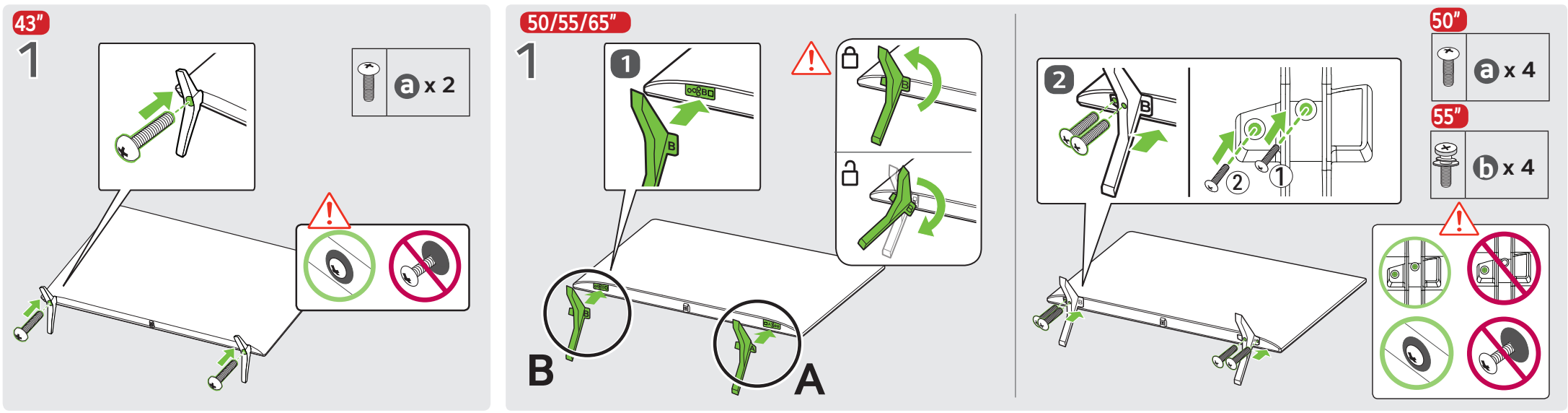

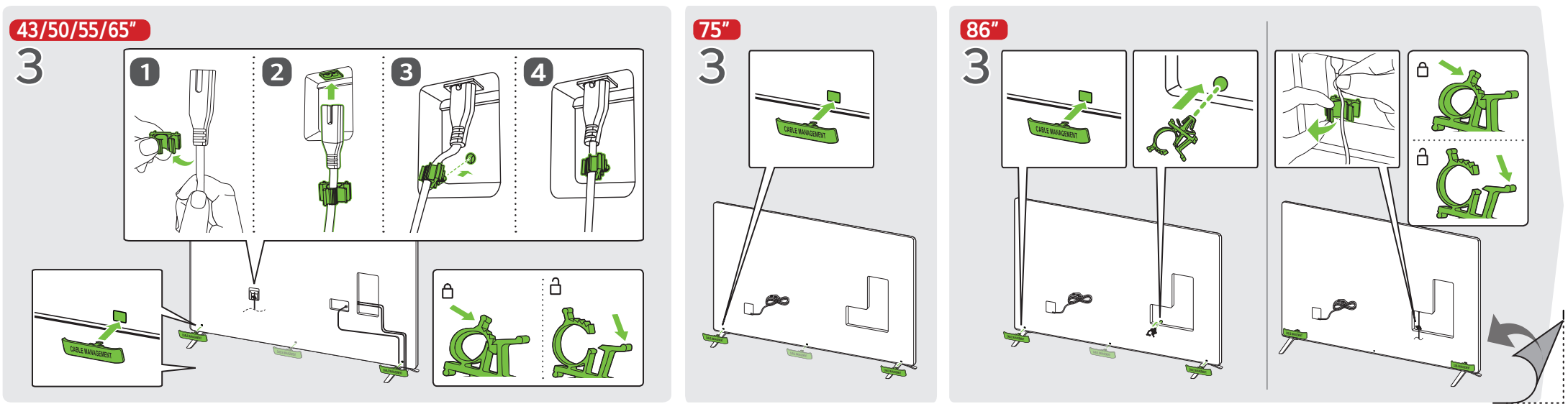

43/50/55/65"

4

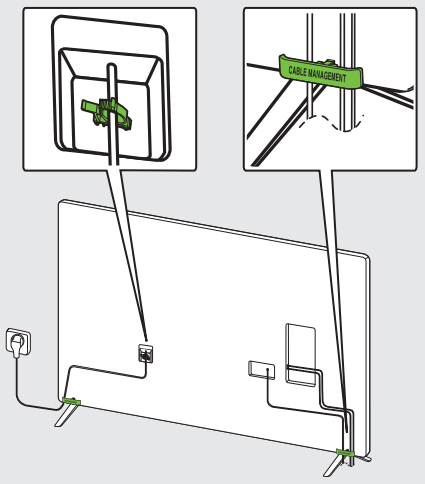

75"

4

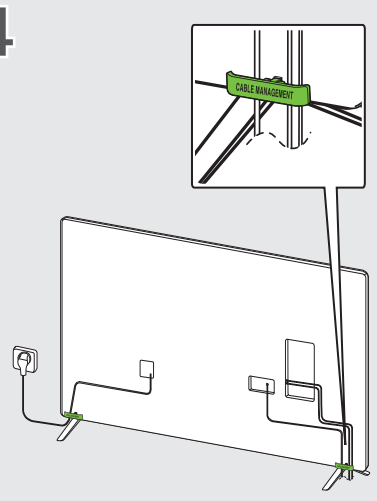

86"

4

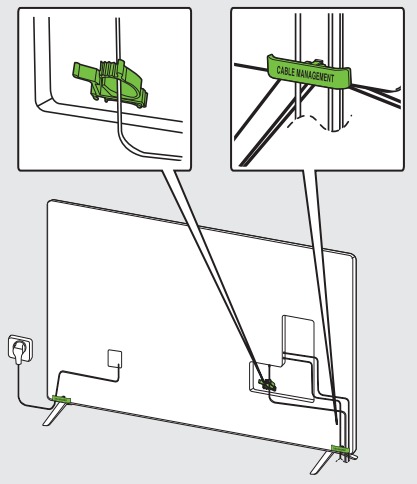

43/50/55/65/75/86"

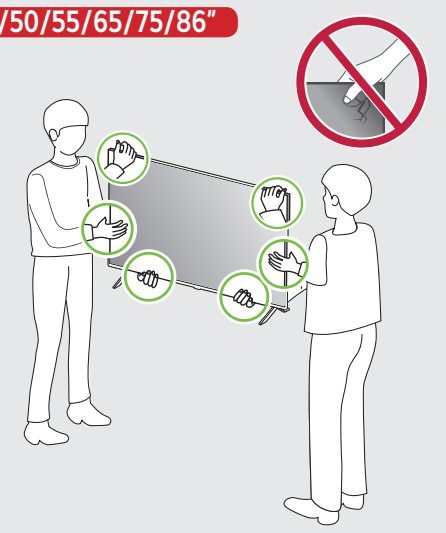

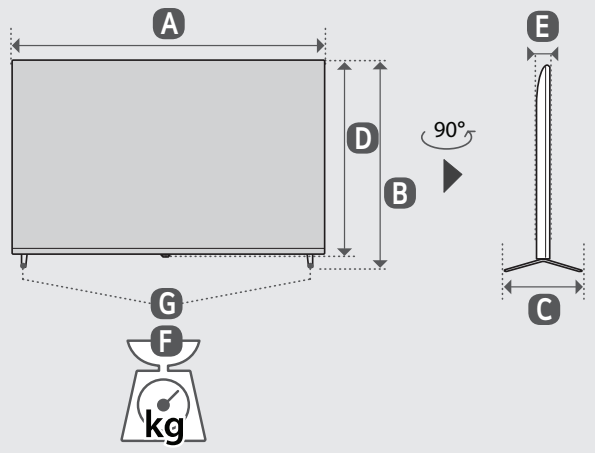

mm (inches / pulgadas / po)
kg (lbs / libras / lb)

	A	B	C	D	E	F	F-G	
43NANO81*	967 mm (38.0) inches	620 mm (24.4) inches	200 mm (7.8) inches	564 mm (22.2) inches	57.7 mm (2.2) inches	9.3 kg (20.5) lbs	9.2 kg (20.2) lbs	115 W
50NANO81*	1 121 mm (44.1) inches	716 mm (28.1) inches	230 mm (9.0) inches	651 mm (25.6) inches	57.7 mm (2.2) inches	12.3 kg (27.1) lbs	12.2 kg (26.8) lbs	135 W
55NANO81*	1 235 mm (48.6) inches	780 mm (30.7) inches	230 mm (9.0) inches	715 mm (28.1) inches	58.1 mm (2.2) inches	14.7 kg (32.4) lbs	14.6 kg (32.1) lbs	160 W
65NANO81*	1 454 mm (57.2) inches	902 mm (35.5) inches	269 mm (10.5) inches	838 mm (32.9) inches	58.4 mm (2.2) inches	22.8 kg (50.2) lbs	22.6 kg (49.8) lbs	200 W
75NANO81*	1 678 mm (66.0) inches	1 027 mm (40.4) inches	361 mm (14.2) inches	964 mm (37.9) inches	59.9 mm (2.3) inches	31.8 kg (70.1) lbs	31.4 kg (69.2) lbs	245 W
86NANO81*	1 927 mm (75.8) inches	1 167 mm (45.9) inches	362 mm (14.2) inches	1 104 mm (43.4) inches	59.9 mm (2.3) inches	45.9 kg (101.1) lbs	45.2 kg (99.6) lbs	335 W

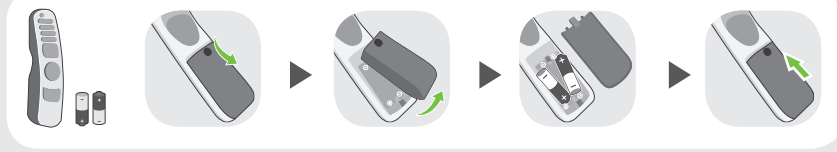

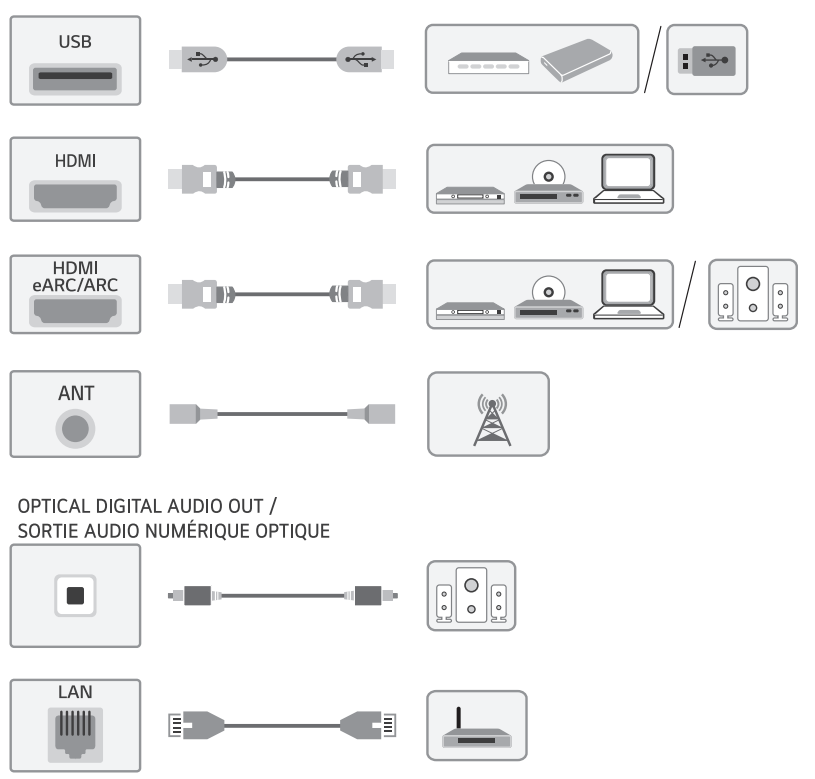

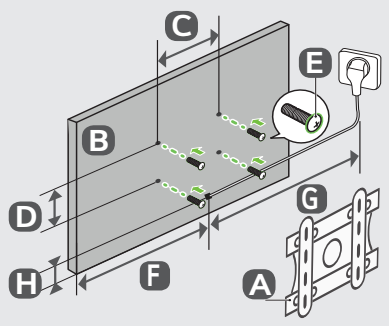

mm (inches / pulgadas / po)

A	B	C x D	E	F	G	H
LSW240B MSW240	43NANO81*	200 x 200 mm (7.8 x 7.8) inches	M6	306 mm (12.0) inches	≧ 1.5 m (59.0) inches	214 mm (8.4) inches
	50NANO81*			384 mm (15.1) inches		254 mm (10.0) inches
WB24GCB MSW240	55NANO81*	300 x 300 mm (11.8 x 11.8) inches	M6	371 mm (14.6) inches		230 mm (9.0) inches
WB24GCB	65NANO81*	300 x 300 mm (11.8 x 11.8) inches	M6	480 mm (18.8) inches		240 mm (9.4) inches
WB24GCB	75NANO81*	400 x 400 mm (15.7 x 15.7) inches	M6	559 mm (22.0) inches		212 mm (8.3) inches
WB24GDB	86NANO81*	600 x 400 mm (23.6 x 15.7) inches	M8	599 mm (23.5) inches		215 mm (8.4) inches

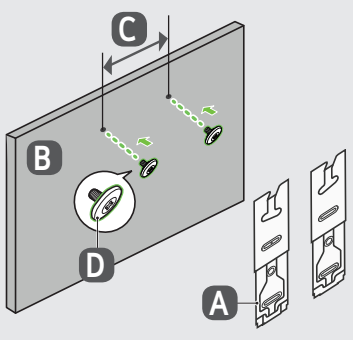

mm (inches / pulgadas / po)

A	B	C	D
WB21LMB	43NANO81* 50NANO81*	200 mm (7.8) inches	M6
	55NANO81* 65NANO81*	300 mm (11.8) inches	

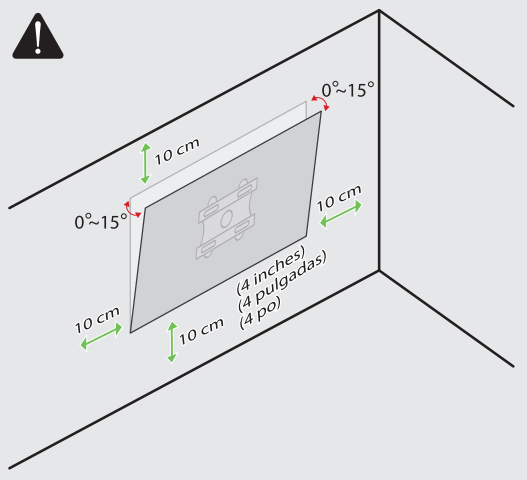

* : 0~9, A~Z