LG
Life's Good

LG Digital Signage

(MONITOR SIGNAGE)

42LS75C 49LS75C 55LS75C
42LS73C 49LS73C 55LS73C
42LS73D 49LS73D 55LS73D

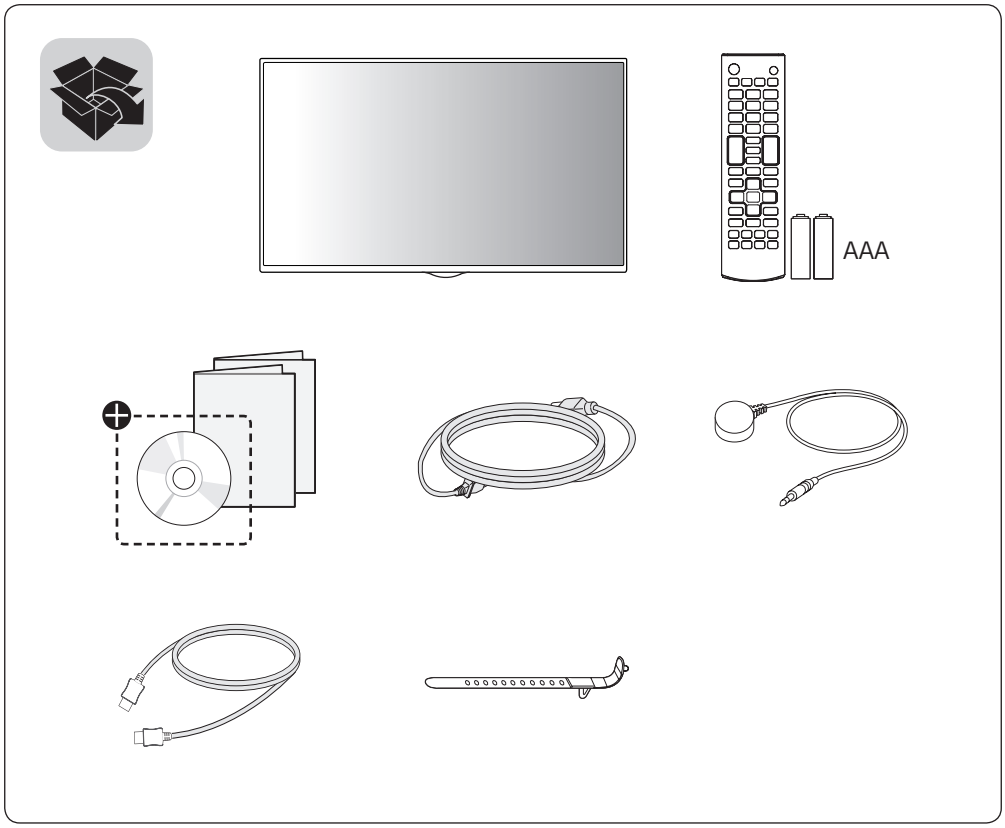

⊕ Depending upon country / Závisí na zemi / Afhængigt af landet / En función del país / Maan mukaan / Selon pays / Abhängig vom Land / Ανάλογα με τη χώρα / Országfüggő / Tergantung pada negaranya / A seconda del Paese / Елге байланысты / 지역에 따라 다름 / Afhankelijk van het land / Avhengig av land / Zależnie od kraju / Dependendo do país / В зависимости от страны / Závisí od krajiny / Beroende på land / 視國家/地區而定 / Ülkeye bağlı / Залежно від країни / Mamlakatga bog'liq ravishda / 国によって異なります / Depende do país / תיולת הנידמב / حسب البلد

MFL69703701

P/No: MFL69703701 (1703-REV02)
Printed in Korea

English	You can download the web manuals for this product at the following websites. (Keyword : LS75C, LS73C, LS73D)
Česky	Můžete si stáhnout webové návody k obsluze tohoto produktu z následujících webových stránek. (Klíčové slovo : LS75C, LS73C, LS73D)
Dansk	Du kan downloade webvejledningen til dette produkt på følgende websteder. (Nøgleord : LS75C, LS73C, LS73D)
Español	Puede descargar los manuales web de este producto en los siguientes sitios web. (Palabra clave : LS75C, LS73C, LS73D)
Suomi	Voit ladata tuotteen verkko-oppaat seuraavilta verkkosivuilta. (Avainsana : LS75C, LS73C, LS73D)
Français	Vous pouvez télécharger le guide Web pour ce produit sur les sites suivants. (Mot-clé : LS75C, LS73C, LS73D)
Deutsch	Sie können die Webhandbücher für dieses Produkt auf den folgenden Websites herunterladen. (Schlüsselwort : LS75C, LS73C, LS73D)
Ελληνικα	Μπορείτε να κατεβάσετε τα εγχειρίδια web για αυτό το προϊόν στις παρακάτω τοποθεσίες web. (Λέξη-κλειδί : LS75C, LS73C, LS73D)
Magyar	A termék internetes útmutatóját a következő weboldalakról töltheti le. (Kulcsszó : LS75C, LS73C, LS73D)
Bahasa Indonesia	Anda dapat mengunduh manual web untuk produk ini di situs web berikut. (Kata kunci : LS75C, LS73C, LS73D)
Italiano	È possibile scaricare i manuali online di questo prodotto dai seguenti siti Web. (Parola chiave : LS75C, LS73C, LS73D)
Қазақша	Бұл өнімге арналған пайдаланушы нұсқаулығын төмендегі веб-сайттарынаң жүктеп алуға болады. (Негізгі сөз : LS75C, LS73C, LS73D)
한국어	웹 매뉴얼은 동해 보다 상세한 제품정보를 확인 할 수 있습니다. 아래의 사이트를 참조하세요. (키워드 : LS75C, LS73C, LS73D)
Nederlands	U kunt de internethandleidingen voor dit product vanaf de volgende websites downloaden. (Term : LS75C, LS73C, LS73D)
Norsk	Du kan laste ned webhåndbøker for dette produktet fra de følgende webområdene. (Nøkkelord : LS75C, LS73C, LS73D)

- World Wide : www.lg.com
- 한국 : www.lge.co.kr
- Brazil : www.lg.com/br
- 日本 : www.lg.com/jp

Polski Instrukcje obsługi tego produktu można pobrać na następujących stronach internetowych. (Słowo kluczowe : LS75C, LS73C, LS73D)

Português Pode transferir os manuais na Internet deste produto nos websites que se seguem. (Palavra-chave : LS75C, LS73C, LS73D)

Русский Онлайн-руководства для данного устройства можно скачать на следующих веб-сайтах.
(Ключевое слово : LS75C, LS73C, LS73D)

Slovenčina Webové príručky pre tento výrobok môžete stiahnuť na nasledujúcich webových stránkach. (Kľúčové slovo : LS75C, LS73C, LS73D)

Svenska Du kan hämta produktens onlinehandböcker på följande webbplatser. (Nyckelord : LS75C, LS73C, LS73D)

台灣語 您可以於下列網站下載本產品的網頁手冊。
(關鍵字 : LS75C, LS73C, LS73D)

Türkçe Bu ürünün web kılavuzlarını aşağıdaki web sitelerinden indirebilirsiniz. (Anahtar sözcük : LS75C, LS73C, LS73D)

Українська Завантажити веб-посібники для цього виробу можна на веб-сайтах, поданих нижче. (Ключове слово : LS75C, LS73C, LS73D)

O'zbekcha Ushbu mahsulot uchun qo'llanmalarni quyidagi veb-saytlarda yuklab olishingiz mumkin. (Kalit so'z : LS75C, LS73C, LS73D)

日本語 この製品のWeb版取扱説明書は次のWebサイトからダウンロードできます。（キーワード : LS75C, LS73C, LS73D)

Português Do Brasil Você pode fazer download dos manuais na Web deste produto nos seguintes sites. (Palavra-chave : LS75C, LS73C, LS73D)

עברית באפשרותך להוריד את מדריכי ההפעלה שבאינטרנט עבור מוצר זה מאתרי האינטרנט הבאים. (מילת מפתח: LS75C, LS73C, LS73D)

العربية يمكنك تنزيل دلائل هذا المنتج الموجودة على الويب من مواقع الويب التالية.
(الكلمة الرئيسية : LS75C, LS73C, LS73D)

- World Wide : www.lg.com
- 한국 : www.lge.co.kr
- Brazil : www.lg.com/br
- 日本 : www.lg.com/jp

SuperSign : http://partner.lge.com

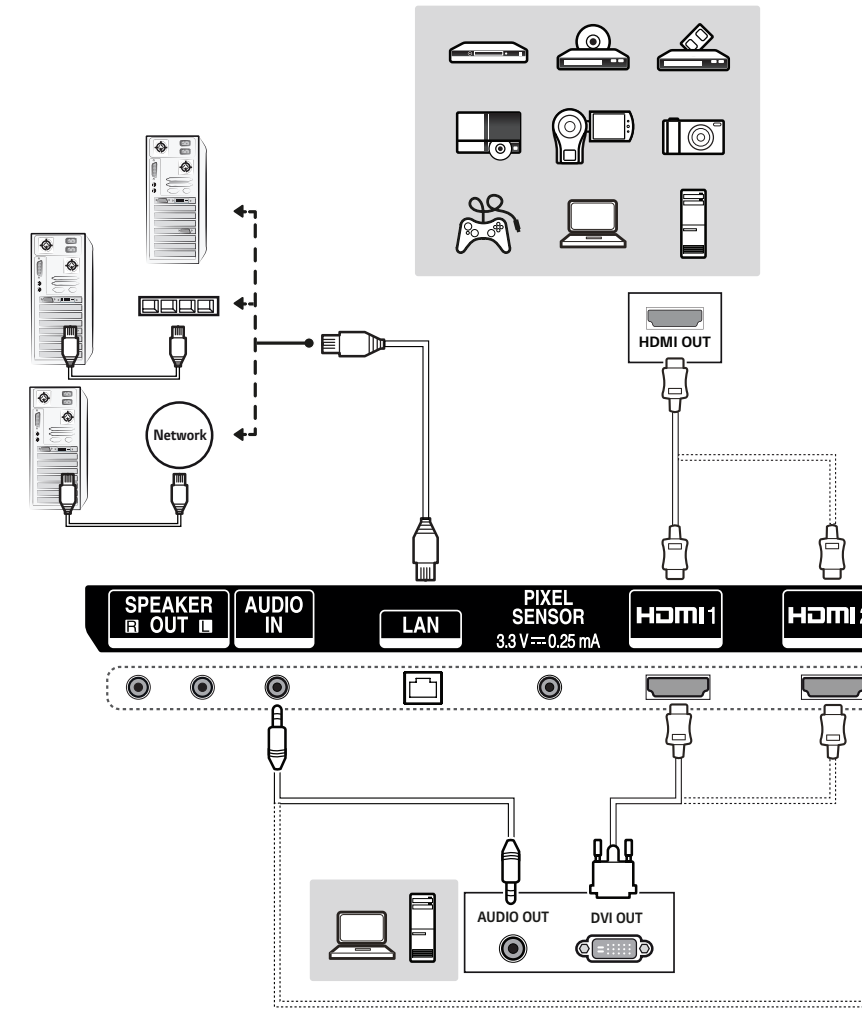
HDMI OUT
Network
SPEAKER
R OUT L
AUDIO
IN
LAN
PIXEL
SENSOR
3.3 V ⎓ 0.25 mA
HDMI1
AUDIO OUT
DVI OUT

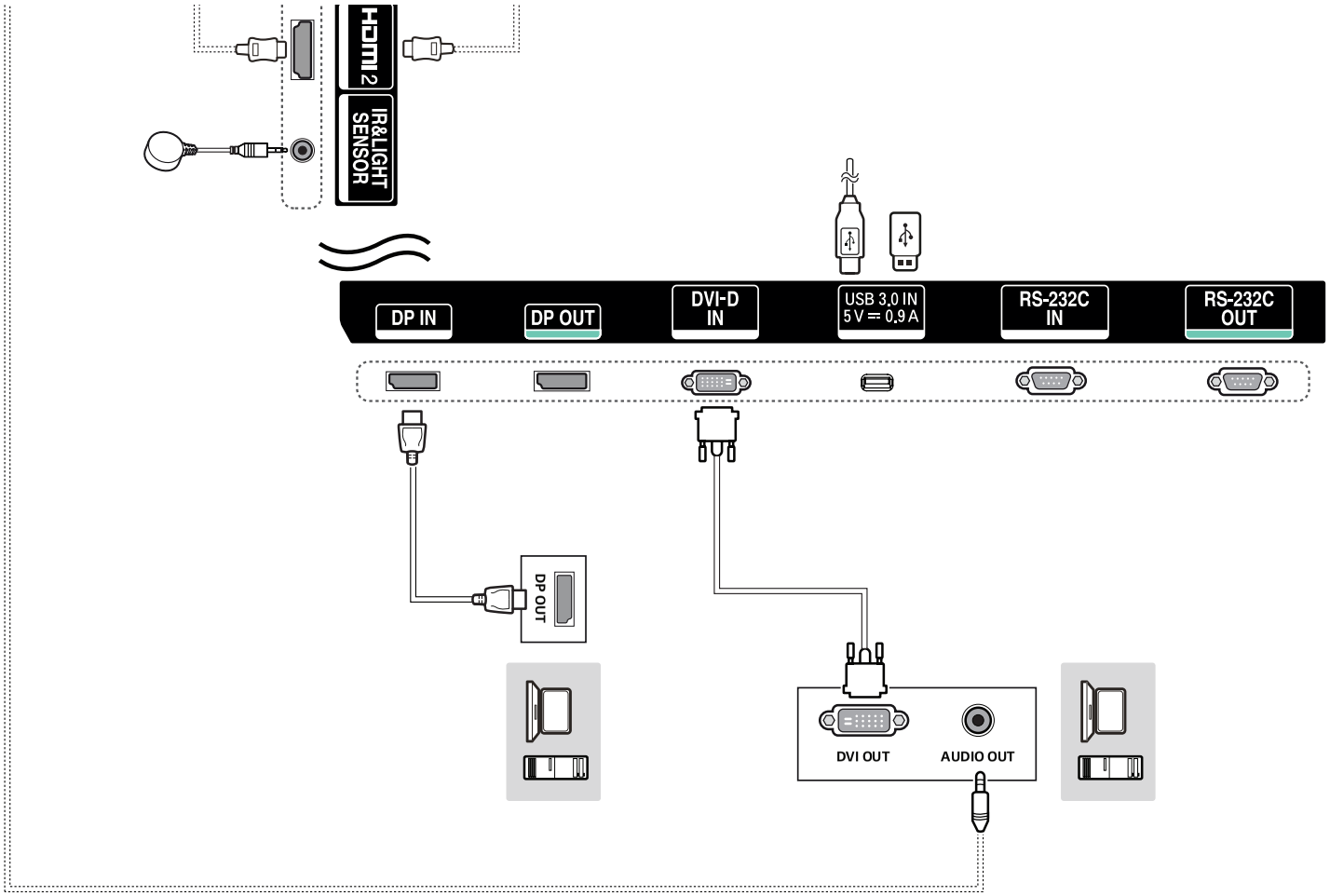
HDMI 2
IR&LIGHT SENSOR
DP IN
DP OUT
DVI-D IN
USB 3.0 IN 5 V ⎓ 0.9 A
RS-232C IN
RS-232C OUT
DP OUT
DVI OUT
AUDIO OUT

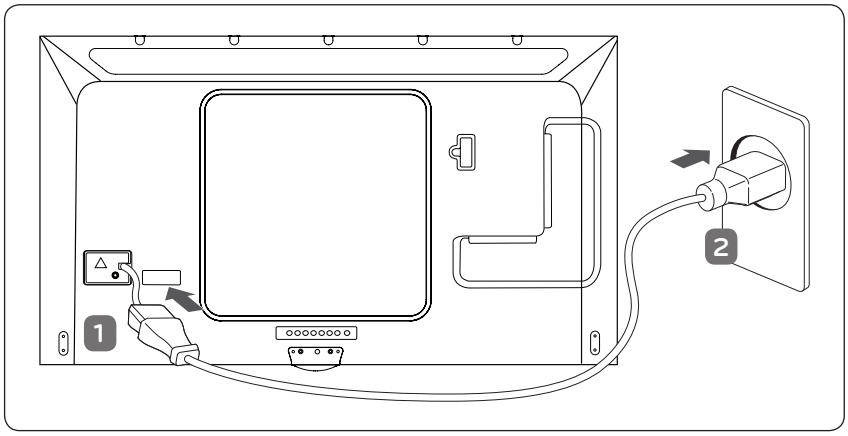
1
2

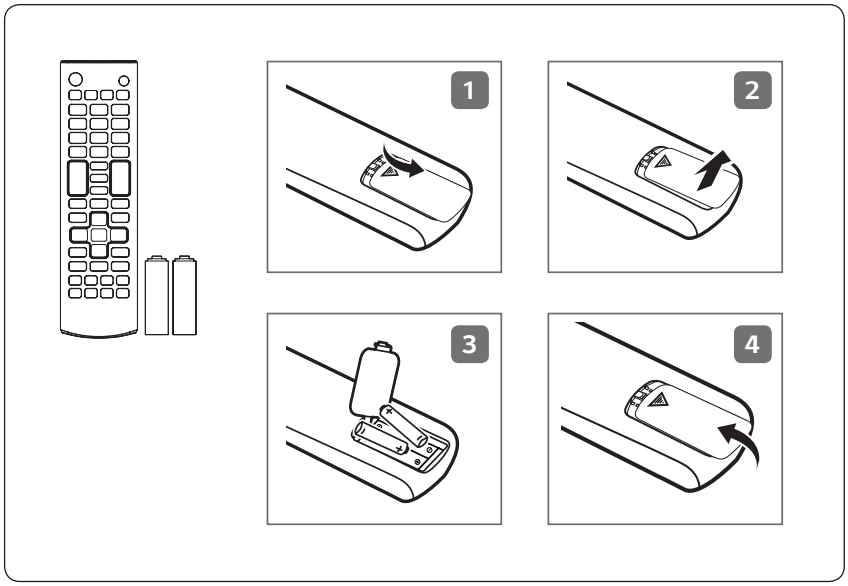
1
2
3
4

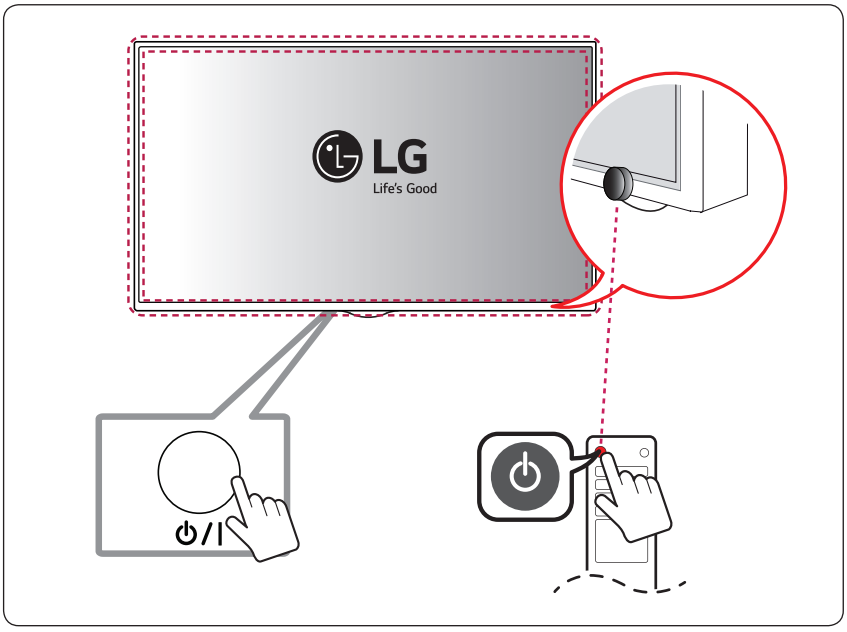
LG
Life's Good

(TAIWAN ONLY)

限用物質含有情況標示聲明書

設備名稱：液晶彩色顯示器，型號（型式）：						
單元	限用物質及其化學符號					
	鉛 (Pb)	汞 (Hg)	鎘 (Cd)	六價鉻 (Cr+6)	多溴聯苯 (PBB)	多溴二苯醚 (PBDE)
電路板	-	○	○	○	○	○
外殼, 支架	○	○	○	○	○	○
玻璃面板	-	○	○	○	○	○
配件(例：纜線)	-	○	○	○	○	○

備考1.〝超出0.1 wt %〞及〝超出0.01 wt %〞係指限用物質之百分比含量超出百分比含 量基準值。

備考2.〝○〞係指該項限用物質之百分比含量未超出百分比含量基準值。

備考3.〝-〞係指該項限用物質為排除項目。

LG
Life's Good

LG
Life's Good

OWNER'S MANUAL

LG Digital Signage

(MONITOR SIGNAGE)

Please read this manual carefully before operating your set and retain it for future reference.

42LS73D
49LS73D
55LS73D

www.lg.com

ENGLISH

TABLE OF CONTENTS

SAFETY PRECAUTIONS 3

- Precautions In Installing the Product.....3
- Precautions to the AC Adapter and Electrical Power.....5
- Precautions In Moving the Product.....7
- Precautions In Using the Product.....8
- Mounting on a Wall.....9

LICENSES..... 10

ASSEMBLY AND PREPARATION 11

- Optional Accessories.....12
- Parts and Buttons.....14
- Connecting the Stand.....15
- Connecting the Speakers.....16
- IR & Light Sensor Connection.....17
- Portrait Layout.....18
- Attaching and removing the LG Logo Bracket.....19
- Installing on a Wall.....21

REMOTE CONTROL..... 24

MAKING CONNECTIONS..... 26

- Connecting to a PC.....26
- External Device Connection.....26
- Daisy Chain Monitors.....28
- Using the Input List.....29

TROUBLESHOOTING..... 30

PRODUCT SPECIFICATIONS..... 33

WARNING - This is a class A product. In a domestic environment this product may cause radio interference in which case the user may be required to take adequate measures.

SAFETY PRECAUTIONS

Please read these safety precautions carefully before using the product.

⚠ WARNING

If you ignore the warning message, you may be seriously injured or there is a possibility of accident or death.

⚠ CAUTION

If you ignore the caution message, you may be slightly injured or the product may be damaged.

⚠ WARNING

- Indoor Use Only.

Precautions In Installing the Product

⚠ WARNING

- Keep away from heat sources like electrical heaters.
  - Electrical shock, fire, malfunction, or deformation may occur.
- Keep the packing anti-moisture material or vinyl packing out of the reach of children.
  - Anti-moisture material is harmful if swallowed. If swallowed by mistake, force the patient to vomit and visit the nearest hospital. Additionally, vinyl packing can cause suffocation. Keep it out of the reach of children.
- Do not put heavy objects on the product or sit upon it.
  - If the product collapses or is dropped, you may be injured. Children must pay particular attention.
- Do not leave the power or signal cable unattended on the pathway.
  - The passerby can trip or fall, which can cause electrical shock, fire, product breakdown, or injury.
- Install the product in a neat and dry place.
  - Dust or moisture can cause electrical shock, fire or product damage.
- If you can smell smoke or other odors or hear a strange sound unplug the power cord and contact the service center.
  - If you continue to use without taking proper measures, electrical shock or fire can occur.
- If you dropped the product or the case is broken, turn off the product and unplug the power cord.
  - If you continue to use without taking proper measures, electrical shock or fire can occur. Contact the service center.

- Do not drop an object on or apply impact to the product. Do not throw any toys or objects on the product screen.
  - It can cause injury to human, problem to product and damage the display.
- Do not let the product fall or drop when connecting it with an external device.
  - This may cause injury and/or damage to the product.
- When connecting it to a game device, keep a distance of four times the diagonal measurement of the screen from the device.
  - If the product falls because of the short cable, this may cause injury and/or damage to the product.
- Leaving a fixed image on the screen for a long time may cause damage to the screen and cause image burn-in. To use the product for a long period of time, use a screen saver on the PC or utilize the residual image prevention function on the product, and when the product is not used, turn off the power. Burn-in and related problems are not covered by the warranty on this product.
- Do NOT install this product on a wall where there is high risk of exposure to oil fumes or mist.
  - This may damage product and cause it to fail.

⚠ CAUTION

- Make sure the product ventilation holes are not blocked. Install the product in a suitably wide place (more than 100 mm from the wall).
  - If you install the product too close to the wall, it may be deformed or fire can break out due to internal heat.
- Do not block the ventilation hole of the product by a tablecloth or curtain.
  - The product can be deformed or fire can break out due to overheating inside the product.
- Install the product on a flat and stable place that has no risk of dropping the product.
  - If the product is dropped, you may be injured or the product may be broken.
- Install the product where no EMI occurs.
- Keep the product away from direct sunlight.
  - The product can be damaged.
- If you install the product in a place that does not meet the recommended conditions, this may cause serious damage to the product's picture quality, life cycle, and appearance. Please check with LG or a qualified installer before installing. This caution applies to a place where there is an abundance of fine dust or oil mist, chemical substances are used, the temperature is very high or low, the humidity is very high, or the product is likely to remain turned on for a long period of time (airport and train station), failure to do so will invalidate the warranty.
- Do not install the product in an area with poor ventilation (e.g.on a bookshelf, in a closet) or outside and avoid placing on cushions or carpets.
- In addition, do not install it where there are heating objects such as lighting equipment.

Precautions to the AC Adapter and Electrical Power

⚠ WARNING

- If water or any foreign substance goes inside the product (TV, monitor, power cord, or AC adapter), disconnect the power cord immediately and contact the service center.
  - Otherwise, this may cause a fire or electric shock due to damage to the product.
- Do not touch the power plug or AC adapter with wet hands. If the pins of the plug are wet or dusty, wipe and dry them before use.
  - Otherwise, this may cause a fire or electric shock.
- Make sure to completely insert the power cord into the AC adapter.
  - If loosely connected, the poor connection may cause a fire or electric shock.
- Be sure to use power cords and AC adapters provided or approved by LG Electronics, Inc.
  - The use of non-approved products may cause a fire or electric shock.
- When unplugging the power cord, always pull it by the plug. Do not bend the power cord with excessive force.
  - The power line can be damaged, which may cause electric shock or fire.
- Be careful not to step or place heavy objects (electronic appliances, clothing, etc.) on the power cord or AC adapter. Be careful not to damage the power cord or AC adapter with sharp objects.
  - Damaged power cords may cause a fire or electric shock.
- Never disassemble, repair or modify the power cord or AC adapter.
  - This may cause a fire or electric shock.
- Make sure to connect the power cable to the grounded current.
  - You may be electrocuted or injured.
- Use the rated voltage only.
  - The product can be damaged, or you may be electrocuted.
- In the presence of thunder and lightning, never touch the power cord and signal cable because it can be very dangerous.
  - It can cause electric shock.
- Do not connect several extension cords, electrical appliances, or electrical heaters to a single outlet. Use a power strip with a grounding terminal designed for exclusive use with the computer.
  - A fire can break out due to overheating.
- Do not touch the power plug with wet hands. Additionally, if the cord pin is wet or covered with dust, dry the power plug completely or wipe dust off.
  - You may be electrocuted due to excess moisture.

- If you don't intend to use the product for a long time, unplug the power cable from the product.
  - Covering dust can cause a fire, or insulation deterioration can cause electric leakage, electric shock or fire.
- Fix the power cable completely.
  - If the power cable is not fixed completely, a fire can break out.
- Do not insert a conductor (like a metal chopstick) into one end of the power cable while the other end is connected to the input terminal on the wall. Additionally, do not touch the power cable right after plugging into the wall input terminal.
  - You may be electrocuted.
- The appliance coupler is used as the disconnect device.
- Please make sure the device is installed near the wall outlet to which it is connected and that the outlet is easily accessible.
- As long as this unit is connected to the AC wall outlet, it is not disconnected from the AC power source even if the unit is turned off.

⚠ CAUTION

- Be sure to keep the outlet, AC adapter, and pins of the power plug clean from dust and etc.
  - This may cause a fire.
- Do not unplug the power cord while the product is in use.
  - Electrical shock can damage the product.
- Use only the power cord supplied with the unit. If you use another power cord, make sure that it is certified by the applicable national standards when not provided by the supplier. If the power cable is faulty in any way, please contact the manufacturer or the nearest authorized repair service provider for a replacement.

Precautions In Moving the Product

WARNING

- Make sure to turn off the product.
  - You may be electrocuted or the product can be damaged.
- Make sure to remove all cables before moving the product.
  - You may be electrocuted or the product can be damaged.
- Make sure the panel faces forward and hold it with both hands to move. If you drop the product, the damaged product can cause electric shock or fire. Contact an authorized the service center for repair.
- Make sure the product is turned off, unplugged, and all cables have been removed. It may take 2 or more people to carry larger apparatus. Do not press against or put stress on the front panel of the apparatus.

CAUTION

- Do not shock the product when moving it.
  - You may be electrocuted or the product can be damaged.
- Do not dispose the product-packing box. Use it when you move.

Precautions In Using the Product

⚠ WARNING

- Do not disassemble, repair or modify the product at your own discretion.
  - Fire or electric shock accident can occur.
  - Contact the service center for check, calibration or repair.
- When the display is to be left unattended for an extended period of time, unplug it from the wall outlet.
- Keep the product away from water.
  - Fire or electric shock accident can occur.
- Do not shock or scratch the front and sides of the screen with metallic objects.
  - Otherwise, it may cause damage to the screen.
- Avoid high temperatures and humidity.

⚠ CAUTION

- Do not put or store inflammable substances near the product.
  - There is a danger of explosion or fire due to careless handling of the inflammable substances.
- When cleaning the product, unplug the power cord and scrub gently with a soft cloth to prevent scratching. Do not clean with a wet cloth or spray water or other liquids directly onto the product. An electric shock may occur. (Do not use chemicals such as benzene, paint thinners, or alcohol.)
- Take a rest from time to time to protect your vision.
- Keep the product clean at all times.
- Take a comfortable and natural position when working with a product to relax the muscles.
- Take a regular break when working with a product for a long time.
- Do not press strongly upon the panel with a hand or sharp object such as nail, pencil, or pen, or make a scratch on it.
- Keep the proper distance from the product.
  - Your vision may be impaired if you look at the product too closely.
- Set the appropriate resolution and clock by referring to the User's Guide.
  - Your vision can be impaired.
- Use authorized detergent only when cleaning the product. (Do not use benzene, thinner, or alcohol.)
  - Product can be deformed.
- Do not expose to dripping or splashing and do not place objects filled with liquids, such as vases, cups, etc. on or over the apparatus (e.g. on shelves above the unit).
- Batteries should not be exposed to excessive heat. For example, keep away from direct sunlight, open fireplace, and electric heaters.
- Do NOT place non-rechargeable batteries in charging device.
- Using headsets (earphones) for a long time or listening loudly can cause damage to your hearing.

- Spray water onto a soft cloth 2 to 4 times, and use it to clean the front frame; wipe in one direction only. Too much moisture may cause staining.

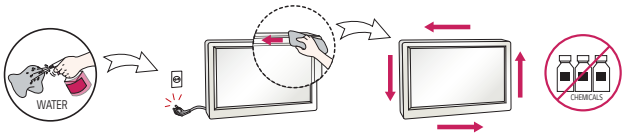

- Do not use products using high voltage around the Monitor. (e.g., a bug zapper)
  - Monitor may have malfunction as its electrical shock.

Mounting on a Wall

- Do NOT install this product by yourself as you may injure yourself or cause damage to product. Please contact service personnel authorised by manufacturer.

LICENSES

Supported licenses may differ by model. For more information of the licenses, visit *www.lg.com*.



The terms HDMI and HDMI High-Definition Multimedia Interface, and the HDMI logo are trademarks or registered trademarks of HDMI Licensing LLC in the United States and other countries.



Manufactured under license from Dolby Laboratories. Dolby, Dolby Vision, Dolby Audio, and the double-D symbol are trademarks of Dolby Laboratories.



For DTS patents, see *http://patents.dts.com*. Manufactured under license from DTS Licensing Limited. DTS, DTS-HD, the Symbol, & DTS or DTS-HD and the Symbol together are registered trademarks of DTS, Inc. © DTS, Inc. All Rights Reserved.

ASSEMBLY AND PREPARATION

⚠ CAUTION

- Always use genuine components to ensure safety and product performance.
- The product warranty will not cover damage or injury caused by the use of counterfeit components.

NOTE

- The accessories provided with your product may vary depending on the model or region.
- Product specifications or contents in this manual may be changed without prior notice due to upgrade of product functions.
- SuperSign Software & Manual
  - Downloading from the LG Electronics website.
  - Visit the LG Electronics website (*http://partner.lge.com*) and download the latest software for your model.
- The warranty will not cover any damage caused by using the product in an excessively dusty environment.

Optional Accessories

Without prior notice, optional accessories are subject to change to improve the performance of the product, and new accessories may be added. The illustrations in this manual may differ from the actual product and accessories.

Stand kit

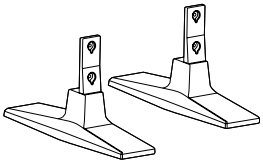

Stand
ST-200T



Screws
Diameter 4.0 mm x Pitch 0.7 mm x Length 10 mm
(including spring washer)

Speaker kit

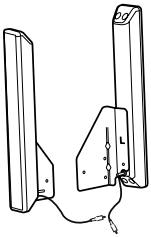

Speakers
SP-2100



Cable holder/
Cable Tie

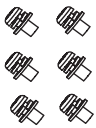

Screws
Diameter 4.0 mm x
Pitch 0.7 mm x Length 8 mm
(including spring washer)

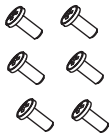

Screws
Diameter 4.0 mm x
Pitch 1.6 mm x Length 10 mm

Media Player kit

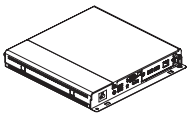

Media Player
MP500/ MP700



Screws



CD (Owner's Manual)/ Cards

OPS kit

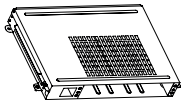

KT-OPSA

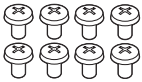

Screws

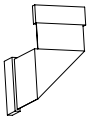

Connecting Cable



Card (Easy Setup Guide)

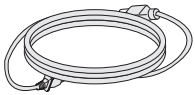

Power Cord

Pixel sensor kit

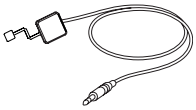

KT-SP0

Wi-Fi Dongle kit

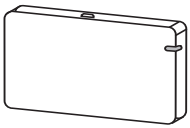

AN-WF500

NOTE

- Cable holder/cable tie may not be available in some areas or for some models.
- Optional accessories are available for some models. If necessary, please purchase them separately.
- Pixel sensor is sold separately. You can obtain additional accessories from your local retail store.
- Before you attach the OPS kit or Media Player, connect the cable to the port.
- Please turn off the power before connecting or removing the Wi-Fi dongle kit.

Parts and Buttons

The image may be different according to the model.

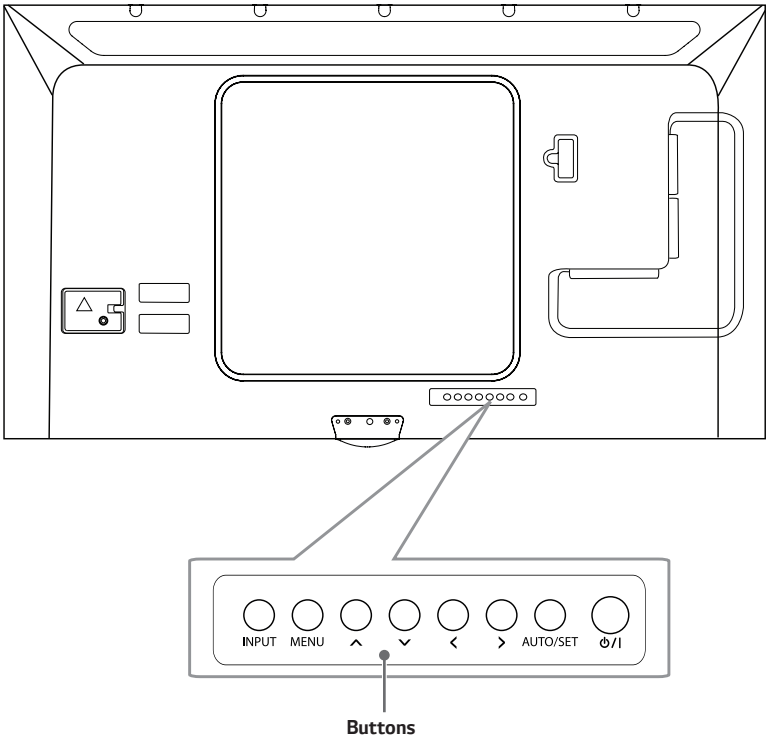

- **INPUT**: Changes the input source.
- **MENU**: Accesses the main menus, or saves your input and exits the menus.
- ∧∨: Adjust the up and down.
- < >: Moves left and right.
- **AUTO/SET**: Displays the current signal and mode.
- ⏻/I: Turns the power on or off.

Connecting the Stand

- For certain models only.
- The image may be different according to the model.

1

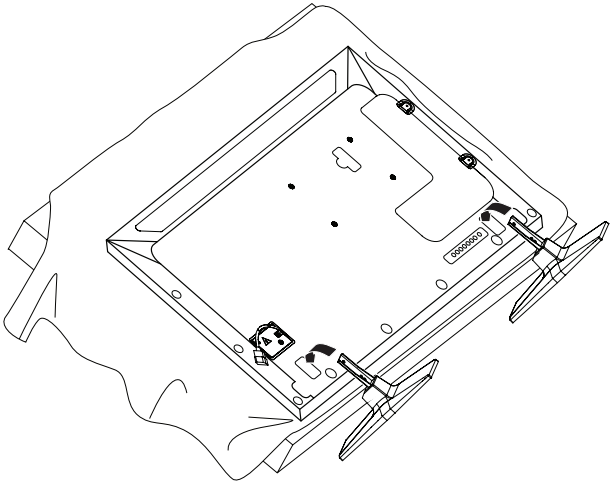

2

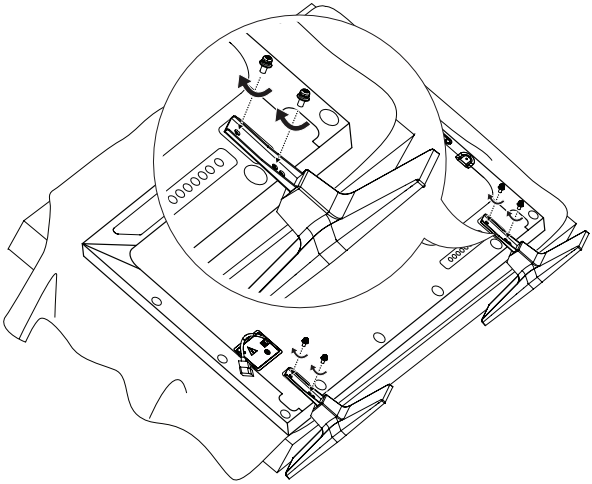

Connecting the Speakers

- For certain models only.
- The image may be different according to the model.

1 Connect an input signal cable before installing the speakers.

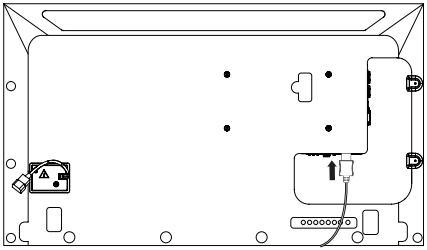

2 Mount the speakers by using screws as shown below. Make sure the power cable is disconnected before making a connection.

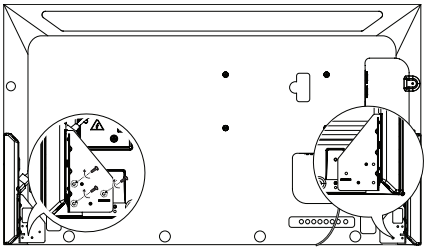

3 Then connect the speaker cable. After installing your speakers, use the cable holders and cable ties to arrange the speaker cables.

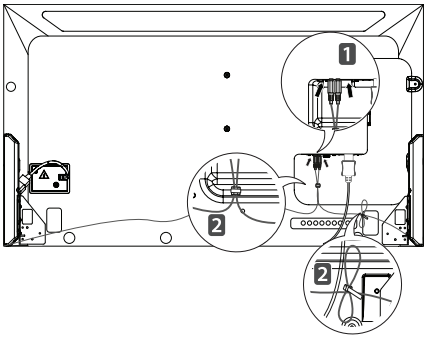

NOTE

- Please turn off the power before removing the cable. Connecting or removing the speaker cable while turned on may result in no sound.

IR & Light Sensor Connection

When the cable is connected to the product, the feature for receiving remote control signals is activated. The IR & Light sensor is magnetic. Attach it to the corner of the front side of the product for use.

[Front]

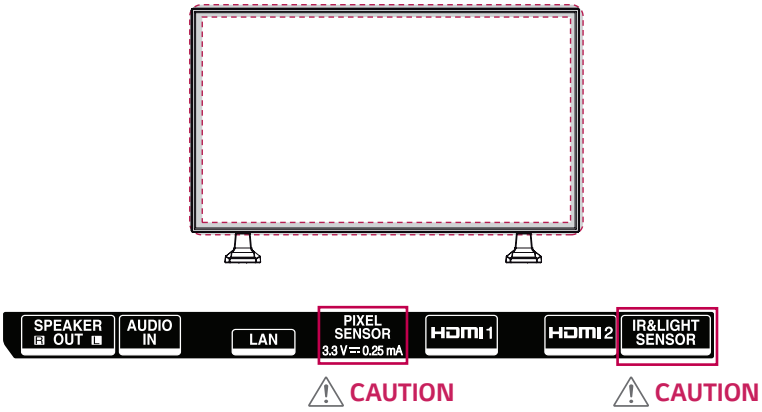

NOTE

- The signal strength of the IR & Light sensor will decrease if it is not attached to the front of the product.

Portrait Layout

When installing in a portrait layout, rotate the monitor counterclockwise 90 degrees (when facing the screen).

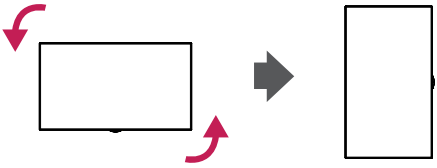

Using Kensington Lock

(This is not available for all models.)

The Kensington security system connector is located at the back of the monitor. For more information on installation and use of this system, refer to the manual provided with the Kensington security system or visit *http://www.kensington.com*.

Connect the Kensington security system cable between the monitor and a table.

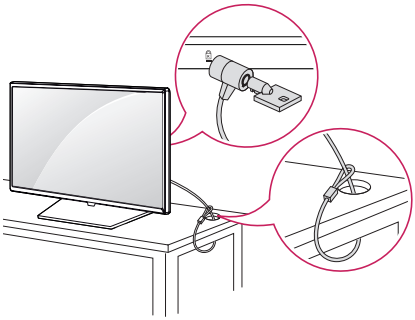

NOTE

- The Kensington security system is optional. You can obtain additional accessories from most electronics retail stores.
- The illustration shows a general example of installation and may look different from the actual product.

Attaching and removing the LG Logo Bracket

- For certain models only.
- The image may be different according to the model.

Removing the LG Logo Bracket

1 Lay a clean cloth on the floor, and then put the monitor on it with the screen face down. Remove the two screws that secure the LG Logo Bracket to the bottom of the rear side of the monitor using a screwdriver.

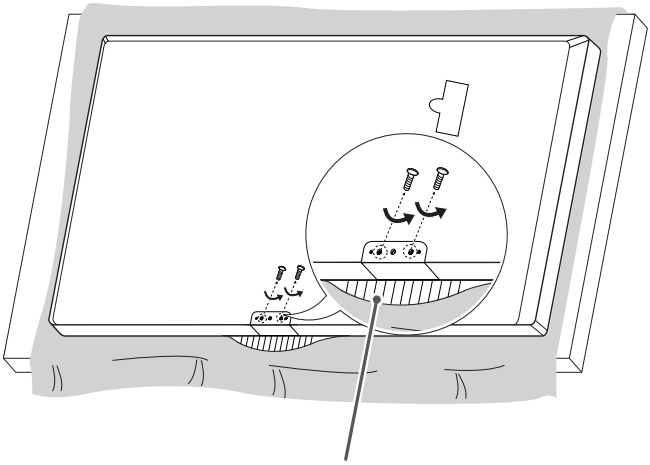

LG Logo Bracket

2 After removing the screws, remove the LG Logo Bracket. When re-attaching the LG Logo Bracket, repeat the process in reverse order.

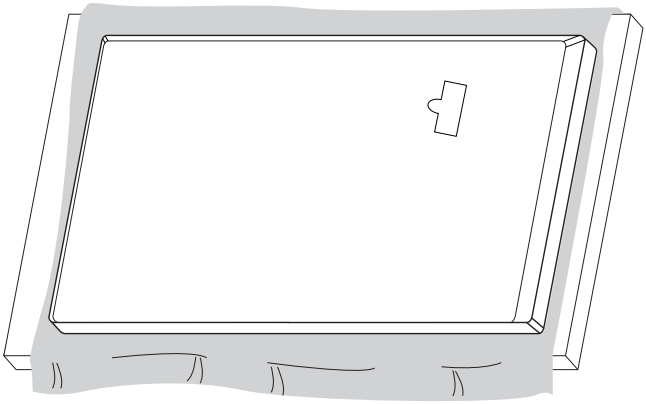

Attaching the LG Logo Bracket on the right side

1 Lay a clean cloth on the floor, and then put the monitor on it with the screen face down. Remove the two screws that secure the LG Logo Bracket to the bottom of the rear side of the monitor using a screwdriver.

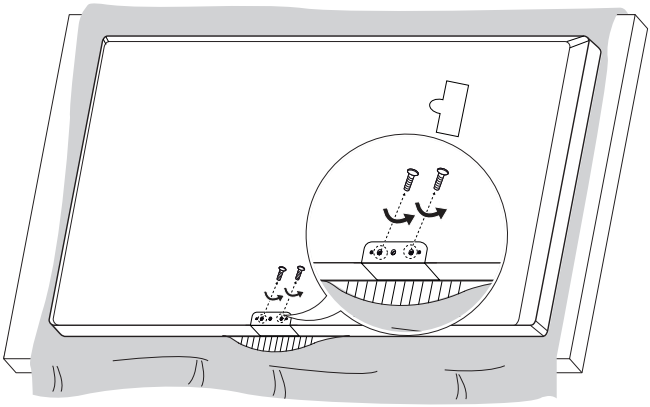

2 After removing the screws, remove the LG Logo Bracket. Align the LG Logo Bracket with the holes on the right side and then attach it using the two screws.

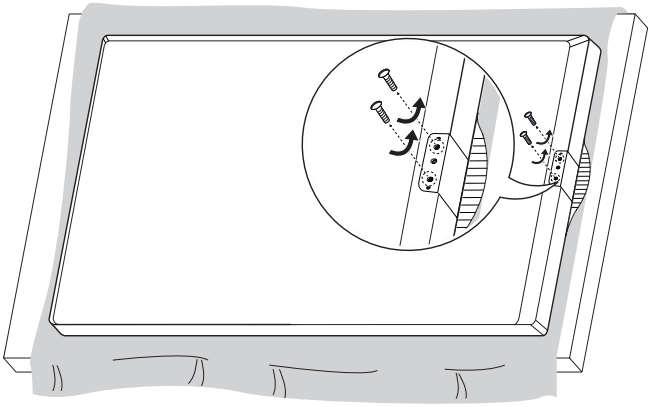

Installing on a Wall

For proper ventilation, allow a clearance of 100 mm on each side and from the wall. Detailed installation instructions are available from your dealer, see the optional Tilt Wall Mounting Bracket Installation and Setup Guide.

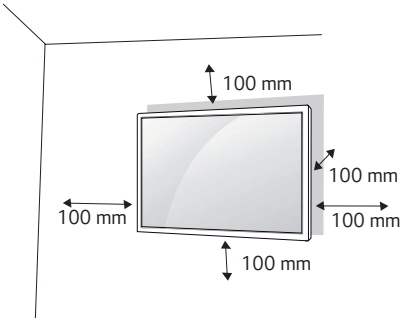

To install your monitor on a wall, attach a wall mounting bracket (optional part) to the back of the monitor.
Make sure that the wall mounting bracket is securely fixed to the monitor and to the wall.

1 Use only screws and wall mounting brackets that conform to VESA standards.
2 Screws which are longer than standard length may damage the inside of the monitor.
3 A non-VESA standard screw may damage the product and cause the monitor to fall. LG Electronics is not liable for any accidents related to the use of non-standard screws.
4 Please use VESA standard as below.

- 785 mm and above

  * Fixing screws: Diameter 6.0 mm x Pitch 1.0 mm x Length 12 mm

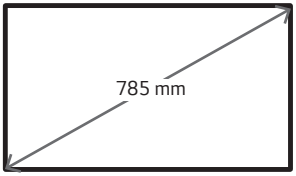

CAUTION

- Disconnect the power cord before moving or installing the monitor to avoid risk of electric shock.
- If you install the monitor on a ceiling or slanted wall, it may fall and result in injury. Use an authorized LG wall mount and contact your local dealer or qualified personnel to assist with the installation.
- Do not over tighten the screws as this may damage the monitor and void your warranty.
- Use only screws and wall mounting brackets that meet the VESA standard. Any damage or injuries caused by misuse or use of improper accessories are not covered by the warranty.
- To prevent injury, this apparatus must be securely attached to the wall in accordance with the installation instructions. (This pertains only to Australia and New Zealand.)

NOTE

- The wall mount kit includes the installation guide and all necessary parts.
- The wall mounting bracket is optional. You can obtain additional accessories from your local dealer.
- The length of screws required may differ depending on the wall mount. Be sure to use the correct length.
- For more information, please refer to the guide provided with the wall mount.

Securing the monitor to a wall (optional)

(Procedure may differ depending on the model.)

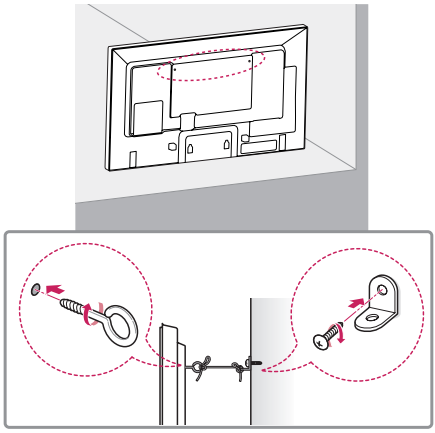

1 Insert and tighten the eyebolts, or brackets and bolts on the back of the monitor.
   - If there are already bolts inserted in the eyebolts' position, remove the other bolts first.
2 Mount the wall brackets with the bolts to the wall. Match the location of the wall bracket and the eyebolts on the rear of the monitor.
3 Connect the eyebolts and wall brackets tightly with a sturdy cord.
   Make sure the securing cord is horizontal with the flat surface.

WARNING

- If the monitor is not positioned in a sufficiently stable location, there is a danger that it will fall. Many injuries, particularly to children, can be avoided by taking simple precautions such as:
  - Using cabinets or stands recommended by the manufacturer.
  - Only using furniture that can safely support the monitor.
  - Ensuring the monitor is not overhanging the edge of the supporting furniture.
  - Not placing the monitor on tall furniture (for example, cupboards or bookcases) without anchoring both the furniture and the monitor to a suitable support.
  - Not placing cloth or other materials between the monitor and supporting furniture.
  - Educating children about the dangers of climbing on furniture to reach the monitor or its controls.

CAUTION

- Make sure that children do not climb on or hang from the monitor.

NOTE

- Use a platform or cabinet that is large and strong enough to support the monitor securely.
- Brackets, bolts, and cords are sold separately. You can obtain additional accessories from your local retail store.
- The illustration shows a general example of installation and may look different from the actual product.

REMOTE CONTROL

The descriptions in this manual are based on the buttons on the remote control. Please read this manual carefully to use the monitor correctly. To install batteries, open the battery cover, place batteries (1.5 V AAA) matching ⊕ and ⊖ terminals to the labels inside the compartment, and close the battery cover. To remove the batteries, perform the installation actions in reverse. The illustrations may differ from the actual accessories.

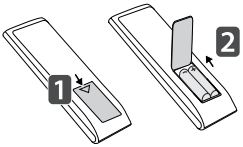

⚠ CAUTION

- Do not mix old and new batteries, as this may damage the remote control.
- Be sure to point the remote control toward the remote control sensor on the monitor.
- Some features of the remote control may not be supported in certain models.

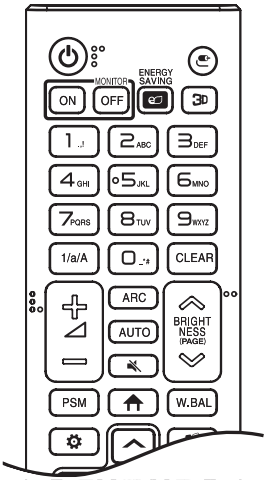

(POWER) Turns the monitor on or off.

MONITOR ON Turns the monitor on.

MONITOR OFF Turns the monitor off.

ENERGY SAVING Adjusts the brightness of the picture to reduce energy consumption.

(INPUT) Selects the input mode.

3D Used for viewing 3D videos.

1/a/A Toggles between numerical and alphabetical.

Number and Alphabet buttons Enters numerical or alphabetical characters depending upon the setting.

CLEAR Deletes the entered numerical or alphabetical character.

Volume Up/Down Button Adjusts the volume.

ARC Selects the Aspect Ratio mode.

AUTO Automatically adjusts picture position and minimizes image instability (available for RGB input only).

(MUTE) Mutes all sounds.

BRIGHTNESS Adjusts the brightness of the display. PAGE function is not supported in this model.

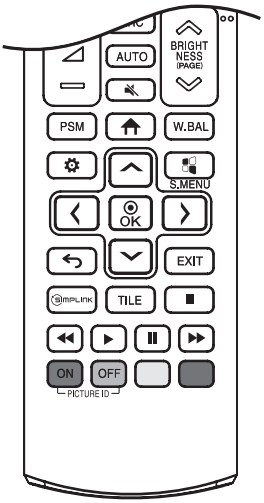

PSM Selects the Picture Mode.

(HOME) Activates the Launcher.

W.BAL Enters the White Balance menu.

(SETTINGS) Accesses the main menus or saves your input and exit menus.

S.MENU SuperSign menu key.

Navigation Buttons Scrolls through menus or options.

OK Selects menus or options and confirms your input.

(BACK) Allows you to move back one step in the user interaction function.

EXIT Quit all OSD tasks and applications.

SIMPLINK Allows you to control various multimedia devices to enjoy multimedia simply by using the remote control through the SimpLink menu.

TILE Selects the TILE Mode.

PICTURE ID ON/OFF When the Picture ID number matches the Set ID number, you can control whichever monitor you want in multi-display format.

USB Menu Control Buttons Controls media playback.

MAKING CONNECTIONS

You can connect various external devices to your monitor. Change the input mode and select the external device you want to connect. For more information about external device connections, see the user manual provided with each device.

Connecting to a PC

Some of the cables are not provided.

This monitor supports the Plug and Play* feature.

* Plug and Play: a feature that enables a PC to recognize devices attached by the user without device configuration or user intervention when powering up.

External Device Connection

Connect a HD receiver, DVD, or VCR player to the monitor and select an appropriate input mode.

Some of the cables are not provided. For the best picture and sound quality, connecting external devices to your monitor using HDMI cables is recommended.

NOTE

- For the best image quality, using the monitor with HDMI connection is recommended.
- To comply with the specifications of the product, use a shielded interface cable with ferrite core, such as a D-sub 15-pin cable and DVI-D/HDMI cable.
- If you turn the monitor on when the set is cold, the screen may flicker. This is normal.
- Sometimes red, green, or blue spots may appear on the screen. This is normal.
- Use a High Speed HDMI®/™ cable.
- Use a certified cable with the HDMI logo attached. If you do not use a certified HDMI cable, the screen may not display or a connection error may occur.
- Recommended HDMI Cable Types
  - High-Speed HDMI®/™ Cable
  - High-Speed HDMI®/™ Cable with Ethernet
- If you cannot hear any sound in HDMI mode please check your PC settings. Some PCs require you to manually change the default audio output to HDMI.
- If you want to use HDMI-PC mode, you must set your PC/DTV to PC mode.
- You may experience compatibility issues if you use HDMI-PC mode.
- Make sure the power cable is disconnected.
- If you connect a gaming device to the monitor, use the cable provided with the gaming device.
- It is recommended to use the speakers that are provided as optional accessories.
- High Speed HDMI®/™ cables transmit a HD signal up to 1080p and higher.

CAUTION

- Connect the signal input cable and tighten it by turning the screws clockwise.
- Do not press the screen with your finger for a prolonged period as this may result in temporary distortion on the screen.
- Avoid displaying static images on the screen for a long period of time to prevent image burn. Use a screensaver if possible.
- A wireless communication device near your monitor can affect the image.

Daisy Chain Monitors

To use different products connected to each other, connect one end of the signal input cable (DP Cable) to the DP Out connector of Monitor 1 and connect the other end to the DP In connector of the other product.

* DP Cable - Use a DP cable that is certified to DP1.1a (SST), DP1.2 (MST) or higher.

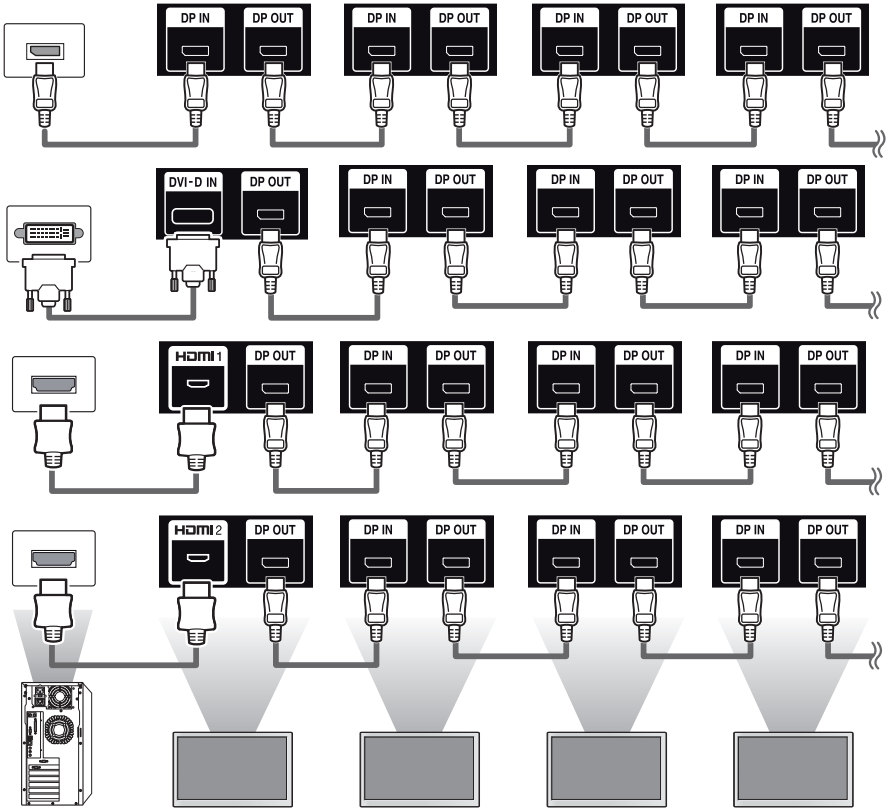

NOTE

- If the signal is stable and there is no cable loss, in general, up to 100 monitors can be connected via the DP Out port (at the recommended resolution). If you want to connect more than this number of monitors, use a booster.
- If you set the tile mode using DVI-D or HDMI, you will not be able to watch HDCP-encrypted content.
- If the signal cable between the product and your PC is too long, make sure to use the Booster or optical cable.

Using the Input List

(HOME) → 

- HDMI1 → HDMI2 → DISPLAYPORT → OPS/DVI-D

TROUBLESHOOTING

No image is displayed.

Problem	Action
Is the product power cord connected?	• Check if the power cord is correctly plugged into the power outlet.
Does the “Invalid Format” message appear?	• The signal from the PC (Graphics card) is out of the vertical or horizontal frequency range of the product. Adjust the frequency range by referring to the Specifications in this manual.
Does the “No Signal” message appear?	• The signal cable between PC and product is not connected. Check the signal cable. • Press the INPUT menu in the remote control to check the input signal.

The Unknown Product message appears when the product is connected.

Problem	Action
Did you install the driver?	• Check if the Plug and Play function is supported by referring to the graphics card user manual.

The screen image looks abnormal.

Problem	Action
Is the screen position wrong?	• Check if the graphics card resolution and frequency are supported by the product. If the frequency is out of range, set to the recommended resolution in the [Control Panel] → [Display] → [Setting] menu. (The settings may differ depending on your operating system.)
The screen is displayed abnormally.	• The proper input signal is not connected to the signal port. Connect the signal cable that matches with the source input signal.

After-image appears on the product.

Problem	Action
After-image appears when the product is turned off.	• If you use a fixed image for a long time, the pixels may be damaged. Use the screen-saver function. • When a dark image is displayed on the screen after an image with high contrast (black and white or gray), this may cause image sticking. This is normal for LCD screen products.

The audio function does not work.

Problem	Action
No sound?	• See if the audio cable is connected properly. • Adjust the volume. • See if the sound is set properly.
Sound is too dull.	• Select the appropriate equalizer sound.
Sound is too low.	• Adjust the volume.

Screen color is abnormal.

Problem	Action
Screen has poor color resolution (16 colors).	• Set the number of colors to more than 24 bits (true color). Select [Control Panel] → [Display] → [Settings] → [Color Table] in Windows. (The settings may differ depending on your operating system.)
Screen color is unstable or mono-colored.	• Check the connection status of the signal cable. Or, re-insert the PC graphics card.
Do black spots appear on the screen?	• Several pixels (red, green, blue, white, or black color) may appear on the screen, which can be attributable to the unique characteristics of the LCD panel. This is not a malfunction of the LCD.

The operation does not work normally.

Problem	Action
The power suddenly turned off.	• Is the Timer set? • Check the power control settings. Power interrupted.

⚠ CAUTION

- Image sticking does not occur when using constantly changing images but may occur when using a fixed image for an extended period of time. Therefore, it is recommended that you use the instructions below to decrease the likelihood of image sticking occurring when using a fixed image. It is recommended that you change the screen at least once every 12 hours at the very minimum; if done more frequently, the prevention of image sticking is more effective.

Recommended operating conditions

1 Change the background and the character colors using the same time interval.

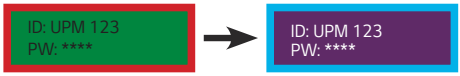

When changing colors, using complementary colors helps to prevent image sticking.

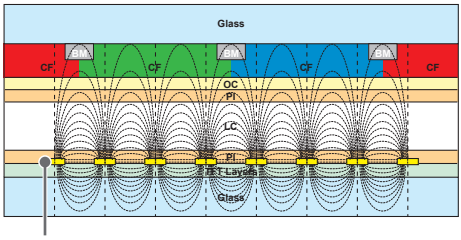

ITO or MoTi Pixel Layer

2 Change the image using the same time interval.



Make sure that the characters or images before changing the image remain in the same location after changing the image.

What is image sticking?

When the LCD panel displays a static image for an extended period of time, it can cause a voltage difference between the electrodes that operate the liquid crystals. When the voltage difference between the electrodes builds up over time, liquid crystals have a tendency to remain aligned in one direction. During this process, a previously displayed image remains visible. This phenomenon is referred to as image sticking.

PRODUCT SPECIFICATIONS

The product specifications below may be changed without prior notice due to upgrade of product functions.
" ~ " refers to alternating current (AC), and " ⎓ " refers to direct current (DC).

LCD screen	Screen type	Thin Film Transistor (TFT) Liquid Crystal Display (LCD) Screen
Video signal	Maximum resolution	1920 x 1080 @ 60 Hz - This may not be supported on some OS or graphics card types.
	Recommended resolution	1920 x 1080 @ 60 Hz - This may not be supported on some OS or graphics card types.
	Horizontal frequency	HDMI/ DVI-D/ DisplayPort: 30 kHz to 83 kHz
	Vertical frequency	HDMI/ DVI-D/ DisplayPort: 56 Hz to 60 Hz
	Synchronization	Separate Sync, Digital
Input/output ports		SPEAKER OUT, AUDIO IN, LAN, PIXEL SENSOR, HDMI1, HDMI2, IR&LIGHT SENSOR, DP IN/OUT, DVI-D IN, USB 3.0 IN, RS-232C IN/OUT
Embedded battery		Applied
Environmental Conditions	Operating Temperature Operating Humidity	0 °C to 40 °C 10 % to 80 %
	Storage Temperature Storage Humidity	-20 °C to 60 °C 5 % to 85 %

* Applicable only for models that support the speakers

Audio	RMS Audio Output	10 W + 10 W (R + L)
	Input Sensitivity	0.7 Vrms
	Speaker Impedance	8 Ω

42LS73D

LCD screen	Pixel pitch	0.4833 mm (H) x 0.4833 mm (V)
Power	Rated power	AC 100-240 V~ 50/60 Hz 1.2 A
	Power consumption	On Mode: 80 W (Typ.) Sleep Mode: ≤ 0.5 W Off Mode: ≤ 0.5 W
Dimensions (Width x Height x Depth) / Weight	Head	948.7 mm x 555.3 mm x 31.7 mm / 12.5 kg
	Head + Stand	948.7 mm x 617.7 mm x 298.3 mm / 13.9 kg
	Head + Speaker	948.7 mm x 555.3 mm x 81.3 mm / 13.3 kg
	Head + Speaker + Stand	948.7 mm x 617.7 mm x 298.3 mm / 14.7 kg

49LS73D

LCD screen	Pixel pitch	0.55926 mm (H) x 0.55926 mm (V)
Power	Rated power	AC 100-240 V~ 50/60 Hz 1.6 A
	Power consumption	On Mode: 105 W (Typ.) Sleep Mode: ≤ 0.5 W Off Mode: ≤ 0.5 W
Dimensions (Width x Height x Depth) / Weight	Head	1094.6 mm x 637.4 mm x 31.7 mm / 15.6 kg
	Head + Stand	1094.6 mm x 699.7 mm x 298.3 mm / 17.0 kg
	Head + Speaker	1094.6 mm x 637.4 mm x 81.3 mm / 16.4 kg
	Head + Speaker + Stand	1094.6 mm x 699.7 mm x 298.3 mm / 17.8 kg

55LS73D

LCD screen	Pixel pitch	0.630 mm (H) x 0.630 mm (V)
Power	Rated power	AC 100-240 V~ 50/60 Hz 1.7 A
	Power consumption	On Mode: 120 W (Typ.) Sleep Mode: ≤ 0.5 W Off Mode: ≤ 0.5 W
Dimensions (Width x Height x Depth) / Weight	Head	1230.4 mm x 713.7 mm x 31.7 mm / 20.7 kg
	Head + Stand	1230.4 mm x 776.1 mm x 298.3 mm / 22.1 kg
	Head + Speaker	1230.4 mm x 713.7 mm x 81.3 mm / 21.5 kg
	Head + Speaker + Stand	1230.4 mm x 776.1 mm x 298.3 mm / 22.9 kg

HDMI/ DVI-D/ DisplayPort/ OPS (PC) Support mode

Resolution	Horizontal frequency (kHz)	Vertical frequency (Hz)
800 x 600	37.879	60.317
1024 x 768	48.363	60
1280 x 720	44.772	59.855
1366 x 768	47.712	60
1280 x 1024	63.981	60.02
1680 x 1050	65.290	59.954
1920 x 1080	67.5	60

HDMI/ DisplayPort/ OPS (DTV) Support Mode

Resolution	Horizontal frequency (kHz)	Vertical frequency (Hz)
480/60p	31.5	60
576/50p	31.25	50
720/50p	37.5	50
720/60p	45	60
1080/50i	28.1	50
1080/60i	33.75	60
1080/50p	56.25	50
1080/60p	67.5	60

NOTE

- Vertical frequency: The product display functions by the screen image changing dozens of times every second like a fluorescent lamp. The vertical frequency or refresh rate is the number of image displays per second. The unit is Hz.
- Horizontal frequency: The horizontal interval is the time taken to display one horizontal line. When 1 is divided by the horizontal interval, the number of horizontal lines displayed every second can be tabulated as the horizontal frequency. The unit is kHz.





ENERGY STAR® is a set of power-saving guidelines issued by the U.S.Environmental Protection Agency (EPA).
As an ENERGY STAR® Partner LGE U. S. A., Inc. has determined that this product meets the ENERGY STAR® guidelines for energy efficiency.
Refer to ENERGYSTAR.gov for more information on the ENERGY STAR® program.

Make sure to read the Safety Precautions before using the product.
The model and serial numbers of the SET are located on the back and one side of the SET. Record it below should you ever need service.

MODEL _____
SERIAL _____

Temporary noise is normal when powering ON or OFF this device.

LG
Life's Good

USER GUIDE

LG Digital Signage
(MONITOR SIGNAGE)

Please read this manual carefully before operating your set and retain it for future reference.

webOS 3.0

www.lg.com

ENGLISH

TABLE OF CONTENTS

USER SETTINGS 3

- Main Menu Settings 3

Picture Settings

Sound Settings

Network Settings

General Settings

ENTERTAINMENT 14

- Using Multimedia Features 14

Connecting USB/SD Storage Devices

- Photo & Video 16

Supported Photo & Video Files

Viewing Photos and Videos

Scheduled Playing

Export

Delete

- Music 20

Supported Music Files

Playing Music

Delete

- SuperSign Contents 21
- Information 21
- Local Contents Scheduler 22

Setting a Scheduled Playing

- Screen Share 23
- Group Manager 24
- Leveler Tool 26
- Control Manager 27

How to Use

Follow the steps below if you encounter issues with your security certificate while attempting to access.

- Multi-Screen 32
- PICTURE ID Settings 33

IR CODES 34

TO CONTROL MULTIPLE PRODUCTS 36

- Connecting the Cable 36
- Communication Parameter 37
- Command Reference List 38
- Transmission/Reception Protocol 41

To obtain the source code under GPL, LGPL, MPL, and other open source licenses, that is contained in this product, please visit *http://opensource.lge.com*.

In addition to the source code, all referred license terms, warranty disclaimers and copyright notices are available for download.

LG Electronics will also provide open source code to you on CD-ROM for a charge covering the cost of performing such distribution (such as the cost of media, shipping, and handling) upon email request to *opensource@lge.com*. This offer is valid for three (3) years from the date on which you purchased the product.

NOTE

- The software-related contents may be changed without prior notice due to upgrade of the product functions.
- Some features described in the User Guide may not be supported in certain models.
- SNMP 2.0 is supported.

USER SETTINGS

Main Menu Settings

Picture Settings

To Select Picture Mode

SETTINGS / ⚙ → ⋮ → Picture → Picture Mode Settings → Picture Mode

Select the picture mode that is best suited to the video type.

- **Vivid**: adjusts the video image for a retail environment by enhancing the **contrast**, **brightness**, and **sharpness**.
- **Standard**: adjusts the video image for a normal environment.
- **APS**: APS (Auto power saving) mode reduces power consumption by dimming control.
- **Cinema**: optimizes the video image for watching movies.
- **Sports**: optimizes the video image for watching sports. Even fast actions such as kicking or throwing a ball are rendered clearly on the screen.
- **Game**: optimizes the video image for playing videogames.
- **Photo**: Optimizes the screen for viewing photos. (This feature is available only with certain models.)
- **Expert/Calibration**: allows an expert, or anyone interested in high quality pictures, to manually tune the picture for the best picture quality.

NOTE

- Depending on the input signal, the available **Picture Mode**s may differ.
- **Expert** is an option that allows a picture quality expert to fine-tune the picture quality using a specific image. Thus, it may not be effective for a normal picture.

To fine-tune the picture mode

SETTINGS / ⚙ ➔ ⋮ ➔ Picture ➔ Picture Mode Settings ➔ Customize

- **Backlight/OLED LIGHT**: adjusts the brightness of the screen by controlling the LCD backlight. The closer the value is to 100, the brighter the screen is.
- **Contrast**: adjusts the difference between the light and dark areas of the picture. The closer the value is to 100, the greater the difference is.
- **Brightness**: adjusts the overall brightness of the screen. The closer the value is to 100, the brighter the screen is.
- **Sharpness**: adjusts the sharpness of the edges of objects. The closer the value is 50, the clearer and the sharper the edge becomes.
- **H Sharpness**: adjusts the sharpness of the contrast edges on the screen from a horizontal point of view.
- **V Sharpness**: adjusts the sharpness of the contrast edges on the screen from a vertical point of view.
- **Color**: softens or deepens the tints on the screen. The closer the value is 100, the deeper the colors become.
- **Tint**: adjusts the balance between red and green levels displayed on the screen. The closer the value is to Red 50, the deeper the color red becomes, and the closer the value is to Green 50, the deeper the color green becomes.
- **Color Temperature**: adjusts the tints of the screen to evoke feelings of warmth or coolness.
- **Advanced Controls/Expert Control**: customizes the advanced options.
  - **Dynamic Contrast**: Optimizes the difference between the light and dark parts of the screen according to the brightness of the image.
  - **Super Resolution**: Sharpens the blurry or indistinguishable parts of the picture.
  - **Color Gamut**: Selects the range of colors to display.
  - **Dynamic Color**: Adjusts the tint and saturation of the image for a more vivid and lively display.
  - **Edge Enhancer**: Provides much sharper and clearer edges to the picture.
  - **Color Filter**: Accurately adjusts color and tint by filtering a specific color area of RGB space.
  - **Preferred Color**: Adjusts the skin tint, grass tint, and sky tint to your preference.
  - **Gamma**: Adjusts the medium brightness of the image.
  - **White Balance**: Adjusts the overall tint of the picture to your preference. In Expert mode, you can fine-tune the picture using the Method/Pattern options.
  - **Color Management System**: Experts use the color management system when they adjust the colors by using the test pattern. The color management system allows you to make an adjustment by selecting from among 6 different color spaces (Red/Yellow/Blue/Cyan/Magenta/Green) without affecting other colors. You may not see tints change in a normal picture even after adjustment.

- **Picture Options:** customizes the picture options.
  - **Noise Reduction:** Removes irregularly generated tiny dots for a clear picture.
  - **MPEG Noise Reduction:** Reduces the noise produced while creating digital video signals.
  - **Black Level:** Adjusts the black level of the picture to correct the brightness and contrast of the picture. (Recommended settings according to input signal: RGB 0–255: High, RGB 16–235: Low, YCbCr: Low)
  - **Real Cinema:** Optimizes the video image for a cinematic look.
  - **Motion Eye Care:** Reduces eye fatigue by adjusting brightness levels and lessening blurriness based on the displayed image.
  - **LED Local Dimming**: Brightens the brighter parts of the image and darkens the darker parts, maximizing contrast. Turning this feature off may lead to increased power consumption. (Only applies to certain models.)
  - **TruMotion:** Reduces image shaking and image sticking that can occur with moving images.

NOTE

- You can adjust advanced settings only in the **User** mode.
- Depending upon the input signal or the selected picture mode, the available options may differ.

To set the aspect ratio,

(Some features may not be supported in certain models.)

SETTINGS / ⚙ ➔ ⋮ ➔ Picture ➔ Aspect Ratio

Changes the aspect ratio to view the image in its optimal size.

- **16:9**: displays the image with a 16:9 aspect ratio.
- **Just Scan**: displays the image in the original size without cutting off the edges. Original is available in HDMI (720p or higher) mode. (On 58:9 models, this option can be selected regardless of the input signal.)
- **Original**: automatically changes the aspect ratio to 4:3 or 16:9 depending on the input video signal.
- **4:3**: displays the image with a 4:3 aspect ratio.
- **58:9**: Displays the screen with a 58:9 aspect ratio.
- **Vertical Zoom**: Adjusts the height and vertical position of the displayed image.
- **All-Direction Zoom**: Adjusts the horizontal/vertical/diagonal dimensions and horizontal/vertical position of the displayed image.

CAUTION

- If a fixed image is displayed on the screen for a long period of time, it will be imprinted and become a permanent disfigurement on the screen. This image burn or burn-in is not covered by the warranty.
- If the aspect ratio is set to **4:3** for a long period of time, image burn may occur on the letterboxed area of the screen.
- The options may differ depending on the model.
- Depending on the input signal, the available aspect ratio may differ.
- When you adjust **Vertical Zoom** or **All-Direction Zoom**, the screen may flicker for some input signals.

To use the Energy Saving function

SETTINGS / ⚙ → ⋮ → Picture → Energy Saving

Reduces power consumption by adjusting peak screen brightness.

- **Auto**: adjusts the brightness of the monitor according to ambient light. (This feature is available only with certain models.)
- **Off**: disables the Energy Saving mode.
- **Minimum/Medium/Maximum**: uses the Energy Saving according to the Energy Saving level specified for your monitor.
- **Screen Off**: turns off the screen. You will only hear audio. You can turn on the screen again by pressing any button on the remote control except the power button.

To use the Smart Energy Saving function

(Only applies to certain models.)

SETTINGS / ⚙ → ⋮ → Picture → Smart Energy Saving

According to picture brightness, the brightness of the monitor will be adjusted automatically to save energy.

- **Off**: disables the Smart Energy Saving function.
- **On**: enables the Smart Energy Saving function.

Configuring the OLED Display

[For OLED models only]

SETTINGS / ⚙ → ⋮ → Picture → OLED Panel Settings

- **Clear Panel Noise**: Corrects issues that may arise when the screen is turned on for a long period of time.

To use the SCREEN(RGB-PC) function

(Only applies to certain models.)

SETTINGS / ⚙ → ⋮ → Picture → SCREEN(RGB-PC)

Customizes the PC display options in RGB mode.

- **Set Automatically**: Sets to adjust the screen position, clock, and phase automatically. The displayed image may be unstable for a few seconds while the configuration is in progress.
- **Resolution**: Selects a proper resolution.
- **Position/Size/Phase**: Adjusts the options when the picture is not clear, especially when characters are shaky, after the auto configuration.
- **Reset**: Restores the options to the default setting.

Sound Settings

- Only applies to certain models.

To select a Sound Mode

SETTINGS / ⚙ → ⋮ → Sound → Sound Mode

The best sound quality will be selected automatically depending on the video type currently being watched.

- **Standard**: this sound mode works well for content of all types.
- **Cinema**: optimizes sound for watching movies.
- **Clear Voice III**: Enhances voices so they can be heard more clearly.
- **Sports**: optimizes sound for watching sports.
- **Music**: optimizes sound for listening to music.
- **Game**: optimizes sound for playing videogames.

To use the Sound Effects function

SETTINGS / ⚙ → ⋮ → Sound → Sound Mode Settings

- **Equalizer**: manually adjust sound by using the equalizer.
- **Balance**: adjust the output volume for the left speaker and the right speaker.
- **Reset**: reset the sound settings.

Selecting Sound Output Device

SETTINGS / ⚙ → ⋮ → Sound → Sound Out

- **Signage Speaker**: You can output sound through the signage monitor's internal speakers. This feature is available only for models with built-in signage speakers.
- **LG Sound Sync / Bluetooth**: You can connect Bluetooth audio devices or Bluetooth headsets wirelessly to enjoy richer sound from the signage monitor conveniently.

NOTE

- Some recently connected devices may automatically attempt to reconnect to the Signage monitor when it is turned on.
- It is recommended that you set LG audio devices that support LG Sound Sync to LG TV mode or LG Sound Sync mode before connecting.
- This feature is only available on certain models.
- Press **Device Selection** to view the devices that are or that can be connected and connect other devices.
- You can use the signage remote control to adjust the volume of the connected device.
- If the audio device fails to connect, check that it is switched on and available for connection.
- Depending on the type of Bluetooth device, the device may not connect correctly or a malfunction such as unsynchronized video and audio may occur.
- Sound may stutter or sound quality may be reduced if:
  - The Bluetooth device is too far from the signage monitor.
  - There are objects obstructing the Bluetooth device and signage monitor.
  - The device is used in proximity to other radio devices such as a microwave oven or wireless LAN router.

To select a Volume Increase Rate,

SETTINGS / ⚙ → ⋮ → Sound → Volume Mode → Volume Increase Amount

You can set the volume range by selecting any of **Low**/ **Medium**/ **High**.

To sync audio with video

SETTINGS / ⚙ → ⋮ → Sound → AV Sync Adjustment

- **Signage Speaker**: adjusts the sync between video and audio coming from external speakers, such as those connected to the digital audio output port, LG audio equipment, or headphones. From the default value, the closer the value is to -, the faster the sound output becomes, and the closer the value is to +, the slower the sound output becomes.
- **Bypass**: audio coming from external devices without delay. Audio may be outputted earlier than video due to the processing time for video that is inputted into the monitor.

Network Settings

To Set a Signage Monitor Name

SETTINGS / ⚙ → ⋮ → Network → Signage Name

You can set a name for Signage Monitor that will be used on the network by using the on-screen keyboard.

To Set Your Wired Network

SETTINGS / ⚙ → ⋮ → Network → Wired Connection (Ethernet)

- **Connecting to a wired network**: Connect your monitor to a local area network (LAN) via the LAN port, and configure the network settings. Only wired network connections are supported. After making a physical connection, a small number of networks may require the display network settings to be adjusted. For most networks, the display will automatically make a connection without any adjustments. For detailed information, contact your Internet provider or consult your router manual.

Setting a Wireless Network

(Only applies to certain models.)

SETTINGS / ⚙ → ⋮ → Network → Wi-Fi Connection

If you have set the monitor up for a wireless network, you can check and connect to the available wireless Internet networks.

- **Add a Hidden Wireless Network**: If you input the name of network directly, you can add a wireless network.
- **WPS PBS connection**: Press the button on the wireless router that supports PBC to easily connect to the router.
- **WPS PIN Code connection**: Enter the PIN number in the web page of the PIN-supporting wireless router to connect to the router in a simple manner.
- **Wi-Fi advanced settings**: Manually input the network information to connect to a wireless network. When a usable wireless network does not appear, press Wi-Fi advanced settings. You will be able to add a network.

Setting up a SoftAP

(Only applies to certain models.)

SETTINGS / ⚙ → ⋮ → Network → SoftAP

If you set up a SoftAP, you can connect many devices via a Wi-Fi connection without a wireless router and use wireless Internet.

- To use SIGNAGE, you must have an Internet connection.
- You cannot use the SoftAP feature and the Screen Share feature at the same time.
- On models that support Wi-Fi dongles, the SoftAP menu is enabled only when a Wi-Fi dongle is connected to the product.
- SoftAP connection information
  - SSID: A unique identifier necessary to make a wireless Internet connection
  - Security key: The security key you enter to connect to the desired wireless network
  - Number of connected devices: Shows the number of devices currently connected to your Signage device via a Wi-Fi connection. Up to 10 devices are supported.

Tips for Network Setting

- Use a standard LAN cable (Cat5 or higher with a RJ45 connector) with this display.
- Many network connection problems during set-up can often be fixed by re-setting the router or modem. After connecting the display to the home network, quickly power off and/or disconnect the power cable of the home network router or cable modem, then power on and/or connect the power cable again.
- Depending on the Internet Service Provider (ISP), the number of devices that can receive Internet service may be limited by the applicable terms of service. For details, contact your ISP.
- LG is not responsible for any malfunction of the display and/or the Internet connection feature due to communication errors/malfunctions associated with your Internet connection, or other connected equipment.
- LG is not responsible for problems with your Internet connection.
- You may experience undesired results if the network connection speed does not meet the requirements of the content being accessed.
- Some Internet connection operations may not be possible due to certain restrictions set by the Internet Service Provider (ISP) supplying your Internet connection.
- Any fees charged by an ISP including, without limitation, connection charges are your responsibility.

NOTE

- If you want to access the Internet directly on your display, the Internet connection should always be on.
- If you cannot access the Internet, check the network conditions from a PC on your network.
- When you use Network Setting, check the LAN cable or check if DHCP in the router is turned on.
- If you do not complete the network settings, the network may not function correctly.

CAUTION

- Do not connect a modular telephone cable to the LAN port.
- Since there are various connection methods, please follow the specifications of your telecommunication carrier or Internet Service Provider.
- Network Setting menu will not be available until the display is connected to a physical network.

Tips for Wireless Network Setting

- Wireless networks can be subject to interference from other devices operating at a frequency of 2.4 GHz (wireless phones, Bluetooth devices or microwave ovens). There may also be interference from devices with a frequency of 5 GHz, same as other Wi-Fi devices.
- The surrounding wireless environment can cause the wireless network service to run slowly.
- If you do not turn off the entire local home network, network traffic may occur on some devices.
- For an AP connection, an access point device that supports wireless connection is required and the wireless connection feature must be enabled on the device. Contact your service provider regarding availability of wireless connection on your access point.
- Check the SSID and security settings of the AP for AP connection. Refer to the appropriate documentation for SSID and security settings of the AP.
- Invalid settings on network devices (wired/wireless line sharer, hub) can cause the monitor to run slowly or not operate properly. Install the devices correctly according to the appropriate manual and set the network.
- Connection method may differ according to the AP manufacturer.

General Settings

To configure the language

SETTINGS / ⚙ → ⋮ → General → Menu Language

Select one of the languages on the menu displayed on the screen.

- **Menu Language:** sets a language for Signage.

Setting up the keyboard language

SETTINGS / ⚙ → ⋮ → General → Keyboard Languages

Select the language you wish to show on the keyboard.

- **Keyboard Languages:** Sets the keyboard language.

To set the time/date

SETTINGS / ⚙ → ⋮ → General → Time & Date

You can check or change the time.

- **Set Automatically:** You can set Time and Date.
- **Daylight Saving Time:** You can set Start Time and End Time for Daylight Saving Time. The DST start/end settings work only when you set them more than one day apart from each other.
- **Time zone:** You can change the settings for Continent, Country/Territory, and City.

To turn your monitor on or off automatically

SETTINGS / ⚙ → ⋮ → General → Timers

You can set the On/Off Timer for your monitor.

- **On Timer:** you can set the time when your monitor turns on.
- **Off Timer:** you can set the time when your monitor turns off.
- **No Signal Power Off (15Min):** When there is no input source, the monitor will automatically turn off after 15 minutes. If you don't want it to turn off automatically, set No Signal Power Off to **Off**.
- **Auto Power Off:** When there is no key input, the monitor will automatically turn off.

NOTE

- On Time/Off Time can be saved for up to seven schedules; the monitor is turned on or off at the preset time in the schedule list. If multiple preset times are stored in the schedule list, this function works at the nearest time from the current time.
- Once the on or off time is set, these functions operate daily at the preset time.
- The scheduled power-off function works properly only when the device time is set correctly.
- When the scheduled power-on and power-off times are the same, the power-off time has priority over the power-on time if the set is turned on, and vice versa if the set is turned off.

Configuring Set ID

SETTINGS / ⚙ → ⋮ → General → Set ID

- **Set ID (1 to 1000)**: Assigns a unique Set ID number to each product when several products are connected for display. Assign numbers ranging from 1 to 1000 and exit the option. You can control each product separately by using the Set ID you assigned to each product.
- **Auto Set ID**: Automatically assigns a unique Set ID number to each set when several products are connected for display.
- **Reset Set ID**: Resets the Set ID of the product to 1.

NOTE

- When using automatic ID settings, the IR signal only needs to be transmitted to the first set. Malfunctions could occur when the IR signal is transmitted to other sets.

Using Tile Mode

(Only applies to certain models.)

SETTINGS / ⚙ → ⋮ → General → Tile Mode

You can configure the integrated screen in the same way as each screen is configured.

- **Row (1 to 15)**: Sets the number of tile rows.
- **Column (1 to 15)**: Sets the number of tile columns.
- **Tile ID (1 to 225)**: Sets the Tile ID. The ID you selected will be displayed on the screen.
- **Natural**: For a more natural display, the image is partly omitted to account for the distance between the screens.
- **Natural Size**: Sets the distance between screens for Natural mode.
- **Reset**: Resets the tile settings to 2 x 2.

NOTE

- If Tile mode is set to On, Smart Energy Saving mode will be disabled to provide the same picture quality as other displays.
- The maximum number of columns and lines that can be set may differ by model.
- To use this function, the product:
  - Must be displayed with other products.
  - Must be operated by connecting to each display via a distributor or DP daisy chain.
  - Tile Mode: Horizontal x Vertical (Horizontal = 1 to 15, Vertical = 1 to 15)
  - 15 x 15 is available

Configuring the Dual-View Screen

[For double-sided flat OLED models only]

SETTINGS / ⚙ → ⋮ → General → Dual-View Screen Setting

- **Front Screen Name**: Sets the name of the front screen.
- **Back Screen Name**: Sets the name of the back screen.
- **Screen Swap**: Swaps the images on the front and back side of the screens.
- **Screen Mirroring**: Copies the image of the current screen to the opposite screen.
- **Screen Off**: Turns off the front or back screen.
- **Clone All Settings**: Copies all settings for the front screen to those for the back screen. This option is only enabled for the front screen.

To reset your monitor settings

SETTINGS / ⚙ → ⋮ → General → Reset to Initial Settings

Resets all monitor settings.

Using UHD Deep Color

[For Ultra HD models only]

SETTINGS / ⚙ → ⋮ → General → UHD Deep Color

If you connect an HDMI or DP device to one of the Deep Color adjustable ports, you can select between Ultra Deep Color On (6G) or Off (3G) in the UHD Deep Color settings menu.
If a compatibility issue occurs with the graphics card when the Deep Color option is set to On at 3840 x 2160 @ 60 Hz, set the Deep Color option to Off.

- HDMI and DP specifications may vary depending on the input port. Check the specifications of each device before connecting.
- HDMI input ports 1 and 2 are best suited for specifications for high definition 4K @ 60 Hz (4:4:4, 4:2:2) video. However, video or audio may not be supported depending on the specifications of the external devices. If this is the case, please connect to a different HDMI port.

ENTERTAINMENT

Using Multimedia Features

Connecting USB/SD Storage Devices

Connect a USB storage device such as a USB flash memory, SD storage devices or an external hard drive to the display and use multimedia features.

CAUTION

- Do not turn the monitor off or remove the USB storage device while **Photo & Video** or **Music** is playing.
- Back up files you have saved on a USB storage device frequently, as loss or damage to the files may be not covered by the warranty.

Tips for using USB/SD storage devices

- Only a USB storage device can be recognized.
- A USB device does not work effectively when it is connected via a USB hub.
- A USB storage device using an automatic recognition program may not be recognized.
- A USB storage device using its own driver may not be recognized.
- The recognition speed of a USB storage device may depend on each device.
- Please do not turn off the display or unplug the USB storage device when the connected device is working. If the USB storage device is suddenly disconnected, the stored files or the device itself may be damaged.
- Please do not connect a USB storage device which was modified to work on a PC. The device may cause the monitor to malfunction or the content fail to be played. Use only a USB storage device which contains normal music, image or video files.
- A USB storage device formatted as a utility program not supported by Windows may not be recognized.
- A USB storage device (over 0.5 A) which requires an external power supply must be connected to a power supply separately. If it is not, the device may not be recognized.
- Please connect the USB storage device using the cable provided by the device manufacturer.
- Some USB storage devices may not be supported or operate smoothly.
- File alignment method of USB storage devices is similar to that of Window XP and filenames can recognize up to 100 English characters.
- Back up important files regularly as data stored on a USB storage device may be damaged. We will not be responsible for any data loss.
- If the USB HDD does not have an external power source, the USB device may not be detected. To ensure the device is detected, connect the external power source.
  - Please use a power adapter for an external power source. We do not provide a USB cable for an external power source.
- If your USB storage device has multiple partitions, or if you use a USB multi-card reader, you can use up to four partitions or USB storage devices.
- If a USB storage device is connected to a USB multi-card reader, its volume data may not be detected.
- If the USB storage device does not work properly, disconnect and reconnect it.
- Detection speed differs from device to device.
- If the USB storage device is connected in Standby Mode, the specific hard disk will automatically be loaded when the display is turned on.
- The recommended capacity is 1 TB or less for a USB external hard drive and 32 GB or less for USB memory stick.
- Any device with more than the recommended capacity may not work properly.
- If a USB external hard drive with an “Energy Saving” function does not work, try turning the hard drive off and on again.
- USB storage devices below USB 2.0 are also supported but may not function correctly in the Videos.
- A maximum of 999 sub-folders or files can be recognized under one folder.
- The SDHC type for SD cards is supported. To use an SDXC card, format it to the NTFS file system first.
- The exFAT file system is not supported for SD cards and USB storage devices.
- Certain models do not support SD cards.

Photo & Video

• The photo feature is not supported in OLED models.

Supported Photo & Video Files

Supported External Subtitle Format

• *.smi, *.srt, *.sub (MicroDVD, SubViewer 1.0/2.0), *.ass, *.ssa, *.txt (TMPlayer), *.psb (PowerDivX), *.dcs (DLP Cinema)

NOTE

• Subtitles are not supported in certain models.
• Embedded subtitles are not supported.

Supported Video Codecs

Extension	Codec	
.asf .wmv	Video	VC-1 Advanced Profile (excluding WMVA), VC-1 Simple and Main Profiles
	Audio	WMA Standard (excluding WMA v1 / WMA Speech)
.avi	Video	Xvid (excluding 3 warp-point GMC), H.264/AVC, Motion Jpeg, MPEG-4
	Audio	MPEG-1 Layer I, II, MPEG-1 Layer III (MP3), Dolby Digital, LPCM, ADPCM, DTS
.mp4 .m4v .mov	Video	H.264/AVC, MPEG-4, HEVC
	Audio	Dolby Digital, Dolby Digital Plus, AAC, MPEG-1 Layer III (MP3)
.3gp .3g2	Video	H.264/AVC, MPEG-4
	Audio	AAC, AMR-NB, AMR-WB
.mkv	Video	MPEG-2, MPEG-4, H.264/AVC, VP8, VP9, HEVC
	Audio	Dolby Digital, Dolby Digital Plus, AAC, PCM, DTS, MPEG-1 Layer I, II, MPEG-1 Layer III (MP3)
.ts .trp .tp .mts	Video	H.264/AVC, MPEG-2, HEVC
	Audio	MPEG-1 Layer I, II, MPEG-1 Layer III (MP3), Dolby Digital, Dolby Digital Plus, AAC, PCM
.mpg .mpeg .dat	Video	MPEG-1, MPEG-2
	Audio	MPEG-1 Layer I, II, MPEG-1 Layer III (MP3)
.vob	Video	MPEG-1, MPEG-2
	Audio	Dolby Digital, MPEG-1 Layer I, II, DVD-LPCM

NOTE

• 3D videos are not supported.

Maximum data transfer rate

- Full HD video
  H.264 1920 x 1080@60P BP/MP/HP@L4.2 40 Mbps
  HEVC 1920 x 1080@60P MP@L4.1, Main10 Profile@L4.1 40 Mbps
- Ultra HD [Applies only to Ultra HD models]
  H.264 1920 x 1080@60P 4096 x 2160@30P BP/MP/HP@L5.1 50 Mbps
  HEVC 4096 x 2160@60P MP@L5.1, Main10 Profile@L5.1 50 Mbps

Supported Photo File

File Format	Format	Item
jpeg, jpg, jpe	**JPEG**	• Minimum : 64 x 64 • Maximum - Normal Type: 15360 (W) x 8640 (H) - Progressive Type: 1920 (W) x 1440 (H)
.png	**PNG**	• Minimum : 64 x 64 • Maximum: 5760 (W) x 5760 (H)
.bmp	**BMP**	• Minimum : 64 x 64 • Maximum: 1920 (W) x 1080 (H)

Viewing Photos and Videos

HOME / 

1 Select your desired storage device.
2 Select and view your desired photo or video.

Tips for Playing Video Files

- Some user-created subtitles may not work properly.
- Some special characters in subtitles are not rendered.
- HTML tags are not supported in subtitles.
- Subtitles in languages other than the supported languages are not available.
- The screen may suffer temporary interruptions (image stoppage, faster playback, etc.) when the audio language is changed.
- A damaged video file may not play correctly, or some player functions may not be usable.
- Video files produced with some encoders may not be played correctly.
- If the video and audio structure of a recorded file is not interleaved, either video or audio is outputted.
- Video files other than the specified types and formats may not play correctly.
- Maximum bit rate of playable video file is 20 Mbps. (Motion JPEG: 10 Mbps only)
- We cannot guarantee smooth playback of files encoded level 4.1 or higher in H.264 / AVC.
- Video files more than 30 GB in file size are not supported.
- A video file and its subtitle file must be located in the same folder. A video file name and its subtitle file name must be identical in order to display the subtitle properly.
- Playing a video via a USB connection that does not support high-speed connection may not function correctly.
- Subtitles on a Network Attached Storage (NAS) device may not be supported depending on the manufacturer and model.
- Streaming of files encoded by GMC (Global Motion Compensation) or Qpel (Quarterpel Motion Estimation) is not supported.
- [For Ultra HD models only] Ultra HD image: 3840 X 2160
  Some HEVC-encoded Ultra HD videos other than the content officially provided by LG Electronics may not be played. Some codecs can be used after upgrading software.

Extension	Codec	
.mkv .mp4 .ts	**Video**	H.264/AVC, HEVC
	Audio	Dolby Digital, Dolby Digital Plus, AAC, HE-AAC

- Playable file sizes may vary depending on the encoding condition.
- The AAC Main profile is not supported.
- Video files created by some encoders may not play.

Scheduled Playing

• Only applies to certain models.

You can schedule your selected content to play at a certain time. (Scheduled playing is available with external inputs.)

HOME / → 

1 Select your desired storage device.
2 Enter the folder that contains the file you wish to schedule.
3 Click the **NEW SCHEDULED PLAYING** button in the upper right.
4 Select the content that you would like to schedule to play.
5 Enter schedule details to create a new schedule.
6 Watch your selected content play at the set time.

Export

• Only applies to certain models.

HOME / → 

1 Select your desired storage device.
2 Enter the folder that contains the file you wish to export.
3 Click the **EXPORT** button in the upper right.
4 Select the file you wish to export.
5 Click the **COPY** / **MOVE** button in the upper right and select the device to which you would like to export the file.
6 Check that the file has been copied or moved to the selected device.

Delete

HOME / → 

1 Select your desired storage device.
2 Enter the path to the file you wish to delete.
3 Click the Delete button.
4 Select the file you wish to delete.
5 Click the Delete button at the top right.
6 Check that the file has been deleted from the list.

Music

Supported Music Files

File Format	Item	Information
.mp3	Bit rate	32 Kbps to 320 Kbps
	Sample freq.	16 KHz to 48 KHz
	Support	MPEG1, MPEG2
	Channels	Mono, Stereo
.wav	Bit rate	-
	Sample freq.	8 kHz to 48 kHz
	Support	PCM
	Channels	Mono, Stereo
.ogg	Bit rate	64 Kbps to 320 Kbps
	Sample freq.	8 kHz to 48 kHz
	Support	Vorbis
	Channels	Mono, Stereo
.wma	Bit rate	128 Kbps to 320 Kbps
	Sample freq.	8 kHz to 48 kHz
	Support	WMA
	Channels	Up to 6 channels

Playing Music

HOME / → 

1 Select your desired storage device. You can select the songs you would like to play across all storage devices in **My playlist**.

2 Select the desired music content and enjoy.

Delete

HOME / → 

1 Select your desired storage device.

2 Enter the path to the file you wish to delete.

3 Click the Delete button.

4 Select the file you wish to delete.

5 Click the Delete button at the top right.

6 Check that the file has been deleted from the list.

SuperSign Contents

Plays stored files using the Export option in SuperSign Editor.

To play back the stored files using the Export option

HOME / ⌂ → 

Only contents distributed by SuperSign Manager are displayed and selectable. If there is a USB/SD storage device connected, the image on the USB/SD device is outputted additionally.

NOTE

- If a folder named normal or AutoPlay exists on the USB/SD card and there are playable files, the files will play automatically when the USB/SD card is connected.
- OLED product types do not play content types other than single video or single flash files. Content produced via SuperSign Editor is not played either.

Information

To check the basic information of Signage Monitor

HOME / ⌂ →

You can see the basic information on Signage Monitor.

You can also switch to **Smart Energy Saving Mode** or configure **Fail Over** settings. (You can switch to **Smart Energy Saving Mode** only when **Energy Saving Mode** is set to Off. The Smart Energy Saving mode is not available on OLED models.)

Local Contents Scheduler

- Only applies to certain models.
- The recommended resolution for scheduled photo playback is 4096 x 2160 or below.

Setting a Scheduled Playing

You can create a scheduled playing using the **Local Contents Scheduler** and the **Photo & Video** app.

Scheduled Playing with Photo & Video

- 1st Method: Refer to the scheduled playing section in Photo & Video app.
- 2nd Method: **HOME /** → 

1. Press the **NEW SCHEDULED PLAYING** button in the upper right.
2. Press the **LOCAL CONTENTS** button.
3. Select the storage device that you would like to schedule to play.
4. Select the content that you would like to schedule to play after navigating to the **Photo & Video** app.
5. Enter schedule details to create a new schedule.
6. Watch your selected content play at the set time.

Scheduled Playing with External Input

HOME / → 

1. Press the **NEW SCHEDULED PLAYING** button in the upper right.
2. Select the **INPUT SOURCE**.
3. Enter schedule details to create a new schedule.
4. Watch your selected external input play at the set time.

Screen Share

• Only applies to certain models.

Allows the screens of devices such as a mobile device or Windows PC to be displayed on the monitor via wireless connections such as WiDi or Miracast.

Using Screen Share

HOME / → 

1 Connect according to the instructions provided by the guide that can be accessed through the **CONNECTION GUIDE** button in the upper right.

2 Once the connection is established, Screen Share between the user device and the monitor is enabled.

NOTE

Configuring WiDi (Wireless Display)

WiDi, which is short for Wireless Display, is a system that wirelessly transmits video and sound files from a laptop that supports Intel WiDi to the display.
This is available only in certain input modes (Composite/Component/RGB/HDMI/DP/OPS/DVI-D).
Other than these modes, LG Signage cannot be detected by your PC.

1 Connect your laptop to an AP. (This feature can be used without an AP, but it is recommended that you connect to it for optimal performance.)
Run the Intel WiDi () program on your laptop.

2 Any nearby LG Signages supporting WiDi are detected. In the list of detected displays, select a Signage to connect to and then, click Connect.
Enter the 8-digit PIN number (ⓐ) displayed on the Signage in the input field of your laptop (ⓑ) and click Continue.

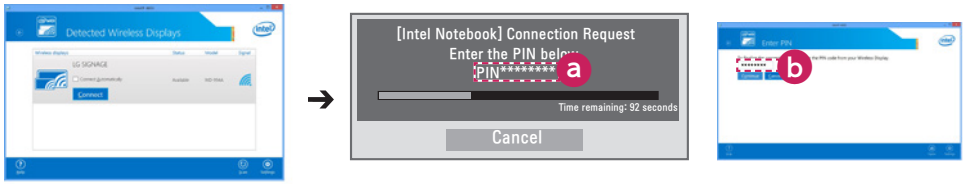

Signage screen Laptop screen

3 The laptop screen appears in the Signage screen within 10 seconds. The wireless environment may affect the screen from displaying.
If the connection is poor, the Intel WiDi connection may be lost.

• LG Signage does not need to be registered.
• For more information on how to use Intel WiDi, visit *http://intel.com/go/widi*.
• This works normally with WiDi 3.5 or later versions.

Group Manager

• Only applies to certain models.

Using this template-based content editing program, you can produce, manage and play content. There are three modes: Master, Slave and StandAlone. The program can be used to distribute and play schedules between the Master and Slave. It also provides access from mobile device or PC.

CAUTION

- A maximum of 5,000 images stored on a USB drive/SD card can be displayed from your PC or mobile device. Images more than 5,000 cannot be displayed from your PC or mobile device. In addition, we recommend you store no more than 1,000 images for use on your USB drive or SD card. If you use more than 1,000 images, the images may not be displayed smoothly depending on your environment.
- Supported devices (Some features may not be available depending on the type or version of your device or browser.)
  - Android 4.4 or later (Chromium v.38.0)
  - iOS 8 or later (Safari v.600.1.4 or later)
  - PC: Chromium v.38.0
- Supported resolutions (this program is optimized for the following resolutions):
  - 360 x 640, 600 x 960, 375 x 667, 768 x 1024 and 1920 x 1080
- If you play UHD videos on a UHD model, videos with a high bitrate may not play properly due to the limitations of the processing speed.
- You can select Slave mode in Master mode when the monitors are connected to the same network.
- Video files larger than 50 MB may not upload properly from mobile devices. We recommend that you play such files via USB/SD storage devices.

Function

The following functions are provided according to the mode selected by the user. However, Slave mode is automatically set to the monitor selected in Master mode.

- Master
  - Group: Add / Edit / Delete / Control (Volume, Backlight, Reboot, Exit)
  - Content: Add / Edit / Delete
  - Schedule: Add / Edit / Delete / Distribute / Play
  - Edit PIN Number / Automatic USB Backup / USB Backup Restoration / Mail Settings / QR Code / Device Mode
- Slave
  - Plays the schedule distributed by the Master
- StandAlone
  - Content: Add / Edit / Delete
  - Schedule: Add / Edit / Delete / Distribute / Play
  - Edit PIN Number / QR Code / Device Mode

How to Use

- Monitors: Run the app in the Launcher bar and add/edit/delete the desired content.
- Mobile devices: Run the app in the Launcher bar and get access using the QR code or URL provided.

NOTE

- If you use a mobile device, you need to go through an authorization process using a PIN code. The default PIN code is '000000'.
- When using a PC, use the full screen (F11) feature in 1920 x 1080 (Full HD) resolution to view the same screen as the monitor.
- To delete a distributed schedule, disable the schedule and redistribute.

Supported Photo Files

File Format	Format	Item
jpeg, jpg	JPEG	• Minimum: 64 x 64 • Maximum: 1920 (W) x 1080 (H)
.png	PNG	• Minimum: 64 x 64 • Maximum: 1920 (W) x 1080 (H)

Supported Video Codecs

Refer to the 'Supported Video Codecs' table of **Photo & Video** app.

Tips for Playing Video Files

Refer to the 'Tips for Playing Video Files' subsection of **Photo & Video** app.

Leveler Tool

• Only applies to certain models.

You can check whether the product is horizontally and vertically level when installing the product outdoors in an enclosure.

Accessing the Leveler Tool

HOME / → 

You can check whether the product is horizontally and vertically level.

Exiting the Leveler Tool

Exit the Leveler Tool by pressing the **EXIT** key on your remote control.

Checking the Angle of the Product

HOME / → 

- You can check the tilt of the product using the bubble in the leveler and the angle indication.
- The left/right tilt is indicated by the leveler and angle indication on the left side of the screen.
- The front/back tilt is indicated by the leveler and angle indication on the right side of the screen.

NOTE

- If the product is tilted more than five degrees in any direction, an arrow will flash in the direction the product needs to be adjusted to.

Control Manager

• Only applies to certain models.

You can control and check the status of the display through web browser.

This function is available on PC and mobile device.

CAUTION

- Supported resolutions (this program is optimized for the following resolutions):
  - 1280 x 1024 / 375 x 667
- Supported browsers (this program is optimized for the following browsers):
  - IE 11 or later / Chrome 50 or later / Firefox 38 or later
- If set to OSD Portrait Mode, the OSD menu that appears on the captured screen will be in Landscape orientation.

Function

- **Dashboard** – Shows a summary of the product's status and provides links to each page.
- **Device Control** – Adjusts screen brightness, sound and input, reboots, etc.
- **Virtual Controller** – Shows the image displayed on the product in real time and enables remote control.
- **Picture** – Sets Picture Mode, Energy Saving, OSD Portrait, etc.
- **Network** – Sets Signage Name, IP Address, etc.
- **Time** – Enables or disables Set Automatically and shows the current time set for the product.
- **Check Screen** – Shows the product's current image output.
- **Door Monitor** – Shows whether the product is open or closed and provides controls for screen Mute for each status.
- **S/W update** – Provides firmware updates.
- **Charts** – Outputs information on the product's temperature, fan status, etc. in chart form.
- **Fan Status** – Shows the status of the fan installed in the product.
- **Log** – Displays product malfunction records.
- **System Information** – Outputs the product's S/W version, model name, etc.
- **Media Library** – Uploads media files to the product and outputs the uploaded file.

How to Use

On a PC

1 Enter 'https://Product IP address:3737' in the browser's address bar to access the Control Manager login page.

2 Enter the password in the Password window (The default password is '000000').

3 Click the **Login** button after entering the password to access the **Dashboard**.

4 Click the face-shaped image to access the User Menu (Change Password, Logout).

On a Mobile Device (by entering IP address)

1 Enter 'https://Product IP address:3737' in the browser's address bar to access the Control Manager login page.

2 Enter the password in the Password window (The default password is '000000').

3 Click the **Login** button after entering the password to access the **Dashboard**.

4 Click the Menu button in the upper left to expand the menu.

5 Click the face-shaped image to access the User Menu (**Change Password**, **Logout**).

On a Mobile Device (by QR code recognition)

1 Launch the Control Manager App.

2 Scan the QR Code with your smartphone to access the Login Page.

3 Click the **Login** button after entering the password to access the **Dashboard**.

4 Click the Menu button in the upper left to expand the menu.

5 Click the face-shaped image to access the User Menu (**Change Password**, **Logout**).

CAUTION

- For apps that do not support security protocols, access the Control Manager by entering the address displayed on the app's screen in your browser.

Follow the steps below if you encounter issues with your security certificate while attempting to access.

On Chrome

1 Click **ADVANCED**

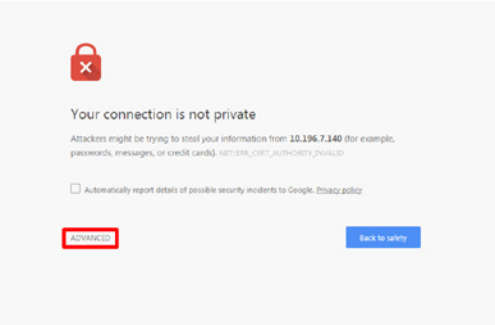

2 Click **Proceed to product IP address (unsafe)**

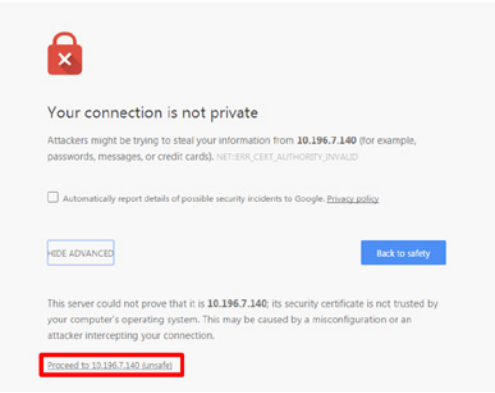

On FireFox

1 Click **Advanced**

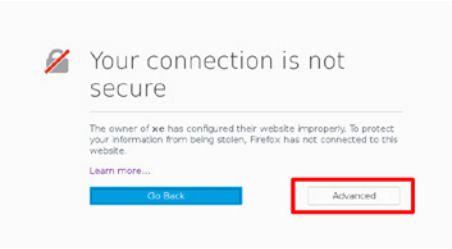

2 Click **Add Exception...**

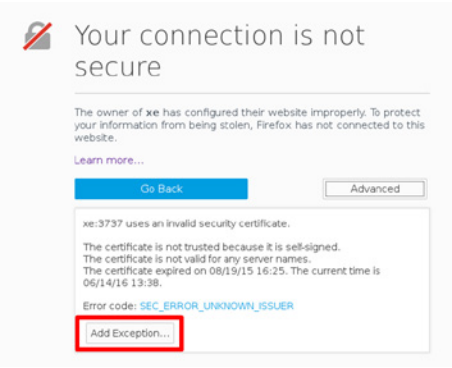

3 Click **Confirm Security Exception**

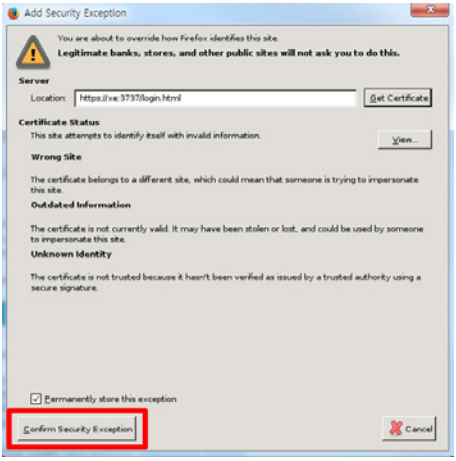

On Internet Explorer

1 Click **Continue to this website (not recommended).**

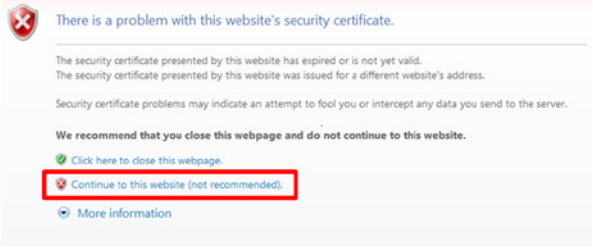

*The text of the links and buttons may differ depending on the OS (Operating System) or language settings used.

Multi-Screen

• Only applies to certain models.

This feature allows you to view multiple external inputs and videos on a single screen.

Accessing Multi-Screen

HOME / ⌂ → 

Enter **Multi-screen** to select the screen layout.

NOTE

• When entering **Multi-screen**, the screen may flicker and the picture may appear abnormal on certain devices while the optimal resolution is selected automatically. If this happens, please restart the monitor.

Selecting Screen Layout

When you enter **Multi-screen** without having set any screen layout, the screen layout selection menu appears.

If the screen layout menu does not appear, you can press the up arrow key on the remote control to go to the screen layout menu bar and select it to show the screen layout menu.

Closing Screen Layout Menu

From the screen layout menu, press the up arrow key on the remote control to go to the screen layout menu bar and select it or press the **BACK** key to close the screen layout menu.

Changing Screen Input

Press the  button on the top right of each split screen to select the desired input.

NOTE

• Inputs which have already been selected for other split screens cannot be selected again. To select them, press the **RESET** button to reset the inputs for all screens first.

• PIP mode is only available when Content Rotation and OSD Portrait are set to 0.

Playing Videos on Split Screens

Press the  button on the upper right of each split screen, select **Video File**, and then select a storage device to view the list of videos in the selected device. Next, select your desired video from the list to play it.

NOTE

• Videos created with HEVC, MPEG-2, H.264, or VP9 codecs can be played on split screens. When using PIP mode, the following combinations cannot be used.

Main	Sub
HEVC	HEVC
H.264	HEVC
MPEG-2	HEVC
VP9	VP9

PICTURE ID Settings

• Only applies to certain models.

PICTURE ID is used to change the settings of a specific set (display) using a single IR receiver for multi-vision. Communication is possible between a monitor with an IR receiver and other monitors using RS-232C cables. Each monitor is identified by a **Set ID**. If you assign the **PICTURE ID** using the remote control, only displays with matching **PICTURE ID** and **Set ID** can be controlled remotely.

1 Assign the **Set ID** to the installed monitors as shown below.

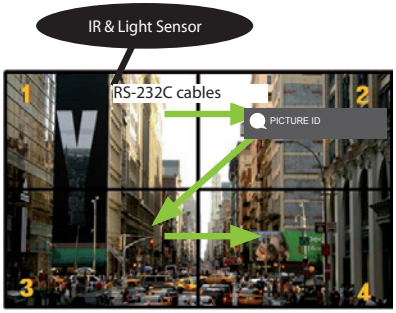

2 Press the red **ON** button on the remote control to assign the **PICTURE ID**.

3 Assign the **Set ID** to the selection of your choice.

• A set with a different **Set ID** from the **PICTURE ID** cannot be controlled by IR signals.

NOTE

• If **PICTURE ID** is set to 2, only the upper right monitor, which has a **Set ID** of 2, can be controlled by IR signals.

• If you press the green **OFF** button for **PICTURE ID**, the **PICTURE ID**s for all monitors are turned off. If you then press any button on the remote control, all monitors can be controlled by IR signals regardless of **Set ID**.

IR CODES

All models do not support the HDMI/USB function.
Some key codes may not be supported depending on the model.

Code (Hex)	Function	Remarks
08	⏻ (POWER)	Remote control button
C4	MONITOR ON	Remote control button
C5	MONITOR OFF	Remote control button
95	Energy Saving	Remote control button
0B	INPUT	Remote control button
10	Number Key 0	Remote control button
11	Number Key 1	Remote control button
12	Number Key 2	Remote control button
13	Number Key 3	Remote control button
14	Number Key 4	Remote control button
15	Number Key 5	Remote control button
16	Number Key 6	Remote control button
17	Number Key 7	Remote control button
18	Number Key 8	Remote control button
19	Number Key 9	Remote control button
02	Volume (+)	Remote control button
03	Volume (-)	Remote control button
E0	BRIGHTNESS ^ (Page Up)	Remote control button
E1	BRIGHTNESS ˅ (Page Down)	Remote control button
DC	3D	Remote control button
32	1/a/A	Remote control button
2F	CLEAR	Remote control button
7E	SIMPLINK	Remote control button
79	ARC(MARK) (Aspect Ratio)	Remote control button
4D	PSM (Picture Mode)	Remote control button
09	MUTE	Remote control button
43	SETTINGS (Menu)	Remote control button
99	Auto Config.	Remote control button
40	Up ▲	Remote control button
41	Down ▼	Remote control button
06	Right ►	Remote control button
07	Left ◄	Remote control button
44	OK	Remote control button
28	BACK	Remote control button

Code (Hex)	Function	Remarks
7B	TILE	Remote control button
5B	EXIT	Remote control button
72	PICTURE ID ON (RED)	Remote control button
71	PICTURE ID OFF (GREEN)	Remote control button
63	YELLOW	Remote control Button
61	BLUE	Remote control button
B1	■	Remote control button
B0	▶	Remote control button
BA	⏸	Remote control button
8F	⏪	Remote control button
8E	⏩	Remote control button
5F	W.BAL	Remote control button
3F	S.MENU	Remote control button
7C	HOME	Remote control button
97	SWAP	Remote control button
96	MIRROR	Remote control button

* Some key codes are not supported depending on the model.

TO CONTROL MULTIPLE PRODUCTS

• Only applies to certain models.

Use this method to connect several products to a single PC. You can control several products at a time by connecting them to a single PC.

In the Option menu, the Set ID must be between 1 and 1000 without being duplicated.

Connecting the Cable

• The image may be different according to the model.

Connect the RS-232C cable as shown in the picture.

The RS-232C protocol is used for communication between the PC and product. You can turn the product on or off, select an input source or adjust the OSD menu from your PC.

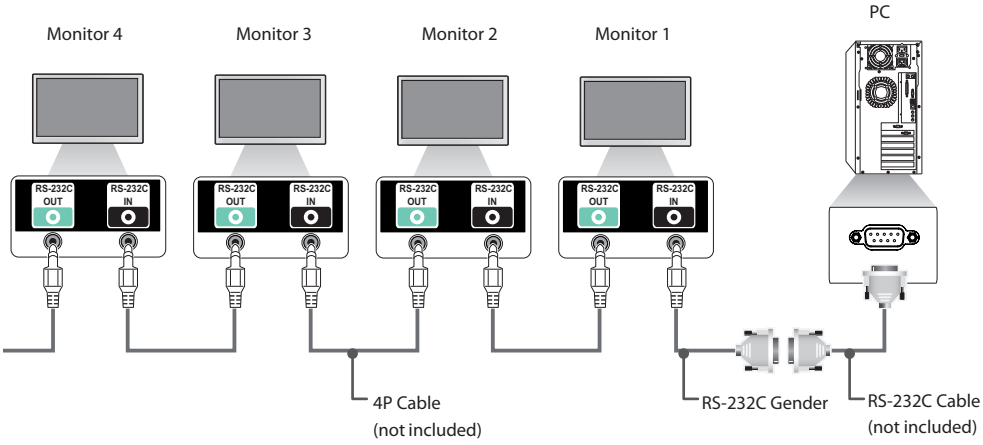

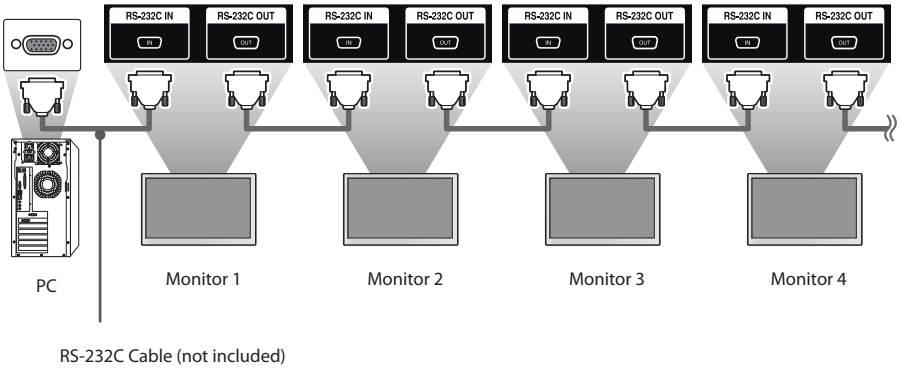

Communication Parameter

Baud Rate: 9600 BPS

Data Length: 8 bit

Parity Bit: None

Stop Bit: 1 bit

Flow Control: None

Communication Code: ASCII code

NOTE

- When using three-wire connections (non-standard), an IR daisy chain cannot be used.
- Be sure to only use the provided gender to connect properly.
- When monitors connected via Daisy Chain (that controls multiple monitors) are turned off and on successively, some monitors may not turn on. In this case, you can turn those monitors on by pressing the **MONITOR ON** button, not the **POWER** button.

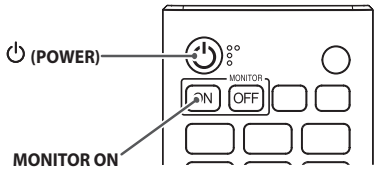

Command Reference List

		COMMAND		DATA
		1	2	(Hexadecimal)
01	Power	k	a	00 to 01
02	Select input	x	b	See Select Input
03	Aspect Ratio	k	c	See Aspect Ratio
04	Energy Saving	j	q	See Energy Saving
05	Picture Mode	d	x	See Picture Mode
06	Contrast	k	g	00 to 64
07	Brightness	k	h	00 to 64
08	Sharpness	k	k	00 to 32
09	Color	k	i	00 to 64
10	Tint	k	j	00 to 64
11	Color temperature	x	u	00 to 64
12	Balance	k	t	00 to 64
13	Sound Mode	d	y	See Sound Mode
14	Mute	k	e	00 to 01
15	Volume Control	k	f	00 to 64
16	Time 1 (year/month/day)	f	a	See Time 1
17	Time 2 (hour/minute/second)	f	x	See Time 2
18	Off time schedule	f	c	00 to 01
19	On Time Schedule	f	b	00 to 01
20	Off Timer (Repeat/Time)	f	e	See Off Timer
21	On Timer (Repeat/Time)	f	d	See On Timer
22	On Timer Input	f	u	Refer to On Timer Input.
23	No Signal Power Off (15Min)	f	g	00 to 01
24	Auto Power Off (4 Hours)	m	n	00 to 01
25	Language	f	i	See Language
26	Reset	f	k	00 to 02
27	Current Temperature	d	n	FF
28	Key	m	c	See Key
29	Time Elapsed	d	l	FF
30	Product Serial Number	f	y	FF
31	Software Version	f	z	FF
32	White Balance Red Gain	j	m	00 to FE
33	White Balance Green Gain	j	n	00 to FE
34	White Balance Blue Gain	j	o	00 to FE
35	White Balance Red Offset	s	x	00 to 7F
36	White Balance Green Offset	s	y	00 to 7F
37	White Balance Blue Offset	s	z	00 to 7F
38	Backlight	m	g	00 to 64

		COMMAND		DATA
		1	2	(Hexadecimal)
39	Screen off	k	d	00 to 01
40	Tile Mode	d	d	00 to FF
41	Check Tile Mode	d	z	FF
42	Tile ID	d	i	See Tile ID
43	Natural Mode	d	j	00 to 01
44	DPM Select	f	j	00 to 07
45	Remote Control/Local Key Lock	k	m	00 to 01
46	Power On Delay	f	h	00 to FA
47	Fail Over Select	m	i	00 to 02
48	Fail Over Input Select	m	j	See Fail Over Input Select
49	IR Operation	t	p	00 to 02
50	Local Key Operation	t	o	00 to 02
51	Check the status	s	v	See Check the status
52	Check Screen	t	z	00 to 01
53	Speakers	d	v	00 to 01
54	Daylight Saving Time	s	d	Refer to ‘Daylight Saving Time’
55	PM Mode	s	n, 0c	00 to 03
56	ISM Method	j	p	See ISM Method
57	Network Settings	s	n, 80(81)(82)	See Network Settings
58	Auto-adjustment	j	u	01
59	H Position	f	q	00 to 64
60	V Position	f	r	00 to 64
61	H Size	f	s	00 to 64
62	Power On Status	t	r	00 to 02
63	Wake On LAN	f	w	00 to 01
64	Intelligent Auto	t	i	00 to 01
65	OSD Portrait Mode	t	h	00 to 02
66	Reset to Initial Settings	t	n	00 to 01
67	Time Sync	s	n, 16	00 to 01
68	Contents Sync	t	g	00 to 01
69	Pivot Mode	t	a	00 to 01
70	Studio Mode	s	n, 83	00 to 01
71	LAN Daisy Chain	s	n, 84	00 to 01
72	Content Rotation	s	n, 85	00 to 02
73	DPM Wake up Control	s	n, 0b	00 to 01
74	Scan Inversion	s	n, 87	00 to 01
75	Beacon	s	n, 88	00 to 01

		COMMAND		DATA
		1	2	(Hexadecimal)
76	Aspect Ratio(Rotation)	s	n, 89	00 to 01
77	Easy Brightness Control Mode	s	m	00 to 01
78	Easy Brightness Control Schedule	s	s	See Easy Brightness Control Schedule
79	MultiScreen Mode & Input	x	c	See MultiScreen Mode & Input
80	Aspect Ratio(MultiScreen)	x	d	See Aspect Ratio(MultiScreen)
81	Screen Mute(MultiScreen)	x	e	See Screen Mute(MultiScreen)
82	Screen Off Always	s	n, 0d	00 to 01
83	Screen Video Freeze	k	x	00 to 01
84	Wireless Wake On LAN	s	n, 90	00 to 01
85	JustScan Toggle	s	n, 91	00 to 01
86	Holiday Schedule Mode	s	n, 1a	00 to 01
87	Holiday Schedule	s	n, 1b	See Holiday Schedule section
88	Dual Screen Off	s	n, 92	00 to 02
89	Fan Control	d	o	00 to 03
90	Fan Failure Check	d	w	FF
91	Luminance Value Read	m	u	FF
92	BLU Maintenance	m	t	00 to 01
93	Power Indicator Settings	f	o	00 to 01
94	OSD Display	k	l	00 to 01
95	Semi-Transparent Brightness	s	n, 95	00 to 64
96	Hybrid Mode	s	n, 96	00 to 02
97	Return Interval	s	n, 97	00 to 0a
98	Proximity Sensitivity	s	n, 98	00 to 02
99	HDMI IT Contents	s	n, 99	00 to 01
100	UPnP Mode	s	n, 9c	00 to 01
101	Model Name check	f	v	FF
102	No Signal Image	s	n, a9	00 to 01

* Note: Commands may not work when the external input is not used.

** Some commands may not be supported depending on the model.

Transmission/Reception Protocol

Transmission

[Command1][Command2][ ][Set ID][ ][Data][Cr]

* [Command1]: identifies between the factory setting and the user setting modes.
* [Command2]: controls monitor sets.
* [Set ID]: Used for selecting a set you want to control. A unique Set ID can be assigned to each set ranging from 1 to 1000(01H~3E8H) under Settings in the OSD menu.
  Selecting '00H' for Set ID allows the simultaneous control of all connected monitors.
  (The maximum value may differ depending on the model.)
* [Data]: Transmits command data.
  Data count may increase depending on the command.
* [Cr]: Carriage Return. Corresponds to '0x0D' in ASCII code.
* [ ]: White Space. Corresponds to '0x20' in ASCII code.

Acknowledgement

[Command2][ ][Set ID][ ][OK/NG][Data][x]

* The Product transmits ACK (acknowledgement) based on this format when receiving normal data. At this time, if the data is FF, it indicates the present status data. If the data is in data write mode, it returns the data of the PC computer.
* If a command is sent with Set ID '00' (=0x00), the data is reflected to all monitor sets and each monitor set does not send an acknowledgement (ACK).
* If the data value 'FF' is sent in control mode via RS-232C, the current setting value of a function can be checked (only for some functions).
*Some commands are not supported depending on the model.

01. Power (Command: k a)

Controls the power on/off of the set.

Transmission

[k][a][ ][Set ID][ ][Data][Cr]

Data 00: Off
01: On

Acknowledgement

[a][ ][Set ID][ ][OK/NG][Data][x]

*The acknowledgement signal is returned properly only when the monitor is fully powered on.

* There may be a delay between the transmission and acknowledgement signals.

02. Select Input (Command: x b)

Selects an input signal.

Transmission

[x][b][ ][Set ID][ ][Data][Cr]

Data 20: AV
40: COMPONENT
60: RGB
70: DVI-D (PC)
80: DVI-D (DTV)
90: HDMI1 (DTV)
A0: HDMI1 (PC)
91: HDMI2/OPS (DTV)
A1: HDMI2/OPS (PC)
92: OPS/HDMI3/DVI-D (DTV)
A2: OPS/HDMI3/DVI-D (PC)
95: OPS/DVI-D (DTV)
A5: OPS/DVI-D (PC)
96: HDMI3/DVI-D (DTV)
A6: HDMI3/DVI-D (PC)
98: OPS (DTV)
A8: OPS (PC)
C0: DISPLAYPORT (DTV)
D0: DISPLAYPORT (PC)
E0: SuperSign webOS Player
E1: Others
E2: Multi Screen

Acknowledgement

[b][ ][Set ID][ ][OK/NG][Data][x]

* Some input signals may not be supported depending on the model.

** Returns to NG if the webOS Player is not distributed from SuperSign W or SuperSign Premium.

03. Aspect Ratio (Command: k c)

Adjusts the aspect ratio.

Transmission

[k][c][ ][Set ID][ ][Data][Cr]

Data 01: 4:3
02: 16:9
04: Zoom
06: Set by Program
09: Just Scan (720p or higher)
10 to 1F: Cinema Zoom 1 to 16
21: 58:9
30: Vertical Zoom
31: All-Direction Zoom

* Available data types differ depending on the input signal. For more information, see the aspect ratio section of the owner's manual.

* The aspect ratio may differ depending on the model's input configuration.

Acknowledgement

[c][ ][Set ID][ ][OK/NG][Data][x]

04. Energy Saving (Command: j q)

Sets the Energy Saving.

Transmission

[j][q][ ][Set ID][ ][Data][Cr]

Data 00: Off
01: Minimum
02: Medium
03: Maximum
04: Automatic
05: Screen off

Acknowledgement

[q][ ][Set ID][ ][OK/NG][Data][x]

** This may not be supported depending on the model.

05. Picture Mode (Command: d x)

Selects a picture mode.

Transmission

[d][x][ ][Set ID][ ][Data][Cr]

Data 00: Vivid
01: Standard
02: Cinema
03: Sports
04: Game
05: Expert 1
06: Expert 2
08: APS
09: Photos
10: Touch
11: Calibration

Acknowledgement

[x][ ][Set ID][ ][OK/NG][Data][x]

* Depending on the model, some picture modes may not be supported.

06. Contrast (Command: k g)

Adjusts the screen contrast.

Transmission

[k][g][ ][Set ID][ ][Data][Cr]

Data 00 to 64: Contrast 0 to 100

Acknowledgement

[g][ ][Set ID][ ][OK/NG][Data][x]

07. Brightness (Command: k h)

Adjusts the screen brightness.

Transmission

[k][h][ ][Set ID][ ][Data][Cr]

Data 00 to 64: Brightness 0 to 100

Acknowledgement

[h][ ][Set ID][ ][OK/NG][Data][x]

08. Sharpness (Command: k k)

Adjusts the screen sharpness.

Transmission

[k][k][ ][Set ID][ ][Data][Cr]

Data 00 to 32: Sharpness 0 to 50

Acknowledgement

[k][ ][Set ID][ ][OK/NG][Data][x]

09. Color (Command: k i)

Adjusts the screen color.

Transmission

[k][i][ ][Set ID][ ][Data][Cr]

Data 00 to 64: Color 0 to 100

Acknowledgement

[i][ ][Set ID][ ][OK/NG][Data][x]

10. Tint (Command: k j)

Adjusts the screen tint.

Transmission

[k][j][ ][Set ID][ ][Data][Cr]

Data 00 to 64: Tint red 50 to green 50

Acknowledgement

[j][ ][Set ID][ ][OK/NG][Data][x]

11. Color Temperature (Command: x u)

Adjusts the screen color temperature.

Transmission

[x][u][ ][Set ID][ ][Data][Cr]

Data 00 to 64: warm 50 to cool 50

Acknowledgement

[u][ ][Set ID][ ][OK/NG][Data][x]

12. Balance (Command: k t)

Adjusts the sound balance.

Transmission

[k][t][ ][Set ID][ ][Data][Cr]

Data 00 to 64: left 50 to right 50

Acknowledgement

[t][ ][Set ID][ ][OK/NG][Data][x]

* It may not be supported depending on the model.

13. Sound mode (Command: d y)

Selects a sound mode.

Transmission

[d][y][ ][Set ID][ ][Data][Cr]

Data 01: Standard
02: Music
03: Cinema
04: Sports
05. Game
07: News (Clear Voice III)

Acknowledgement

[y][ ][Set ID][ ][OK/NG][Data][x]

* It may not be supported depending on the model.

14. Mute (Command: k e)

Mutes/unmutes the sound.

Transmission

[k][e][ ][Set ID][ ][Data][Cr]

Data 00: Mute
01: Unmute

Acknowledgement

[e][ ][Set ID][ ][OK/NG][Data][x]

* It may not be supported depending on the model.

15. Volume Control (Command: k f)

Adjusts the playback volume.

Transmission

[k][f][ ][Set ID][ ][Data][Cr]

Data 00 to 64: Volume 0 to 100

Acknowledgement

[f][ ][Set ID][ ][OK/NG][Data][x]

* It may not be supported depending on the model.

16. Time 1 (year/month/day) (Command: f a)

Sets the values of the Time 1 (year/month/day), or sets the Auto time.

Transmission

1. [f][a][ ][Set ID][ ][Data1][ ][Data2][ ][Data3][Cr]

2. [f][a][ ][Set ID][ ][0][0][ ][Data1][ ][Cr]

1. Setting the Time 1 (year/month/day)

Data1 04~1B: year 2014 to 2037

Data2 01 to 0C: January to December

Data3 01 to 1F: 1st to 31st

* Enter "fa [Set ID] ff" to view the Time 1 (year/month/day) settings.

2. Setting the Auto time

Data1 00: Auto
01: Manual

* To view the set value of the Auto time, enter “fa [Set ID] 00 ff”.

Acknowledgement

1. [a][ ][Set ID][ ][OK/NG][Data1][Data2][Data3][x]

2. [a][ ][Set ID][ ][OK/NG][0][0][Data1][x]

17. Time 2 (hour/minute/second) (Command: f x)

Adjusts the Time 2 (hour/minute/second) value.

Transmission

[f][x][ ][Set ID][ ][Data1][ ][Data2][ ][Data3][Cr]

Data1 00 to 17: 00 to 23 hours

Data2 00 to 3B: 00 to 59 minutes

Data3 00 to 3B: 00 to 59 seconds

* Enter “fx [Set ID] ff” to view the Time 2 (hour/minute/second) settings.

** This function is only available when Time 1 (year/month/day) is set.

Acknowledgement

[x][ ][Set ID][ ][OK/NG][Data1][Data2][Data3][x]

18. Off Time Schedule (Command: f c)

Enables/disables the Off Time Schedule.

Transmission

[f][c][ ][Set ID][ ][Data][Cr]

Data 00: Off
01: On

Acknowledgement

[c][ ][Set ID][ ][OK/NG][Data][x]

19. On Time Schedule (Command: f b)

Enables/disables the On Time schedule.

Transmission

[f][b][ ][Set ID][ ][Data][Cr]

Data 00: Off
01: On

Acknowledgement

[b][ ][Set ID][ ][OK/NG][Data][x]

20. Off Timer (Repeat/Time) (Command: f e)

Configures Off Timer (Repeat/Time) settings.

Transmission

[f][e][ ][Set ID][ ][Data1][ ][Data2][ ][Data3][Cr]

Data1

1. f1h to f7h (reading data)

F1: reads the 1st Off Timer data

F2: reads the 2nd Off Timer data

F3: reads the 3rd Off Timer data

F4: reads the 4th Off Timer data

F5: reads the 5th Off Timer data

F6: reads the 6th Off Timer data

F7: reads the 7th Off Timer data

2. e1h-e7h (delete one index), e0h (delete all indexes)

E0: erases all Off Timer settings

E1: erases the 1st Off Timer setting

E2: erases the 2nd Off Timer setting

E3: erases the 3rd Off Timer setting

E4: erases the 4th Off Timer setting

E5: erases the 5th Off Timer setting

E6: erases the 6th Off Timer setting

E7: erases the 7th Off Timer setting

3. 01h to 0Ch (sets the day of the week for the Off Timer)

01: Once

02. Daily

03: Mon - Fri

04: Mon - Sat

05: Sat - Sun

06. Every Sunday

07. Every Monday

08. Every Tuesday

09. Every Wednesday

0A. Every Thursday

0B. Every Friday

0C. Every Saturday

Data2 00 to 17: 00 to 23 hours

Data3 00 to 3B: 00 to 59 minutes

* To read or delete the Off Time Schedule list, [Data2][Data3] must be set to FFH.

Example 1: fe 01 f1 ff ff – reads the first index data in Off Timer.

Example 2: fe 01 e1 ff ff - deletes the first index data from Off Timer.

Example 3: fe 01 04 02 03 - sets Off Timer to 02:03 from Monday to Saturday.

* This function is only available when Time 1 (year/month/day) and Time 2 (hour/minute/second) are set.

Acknowledgement

[e][ ][Set ID][ ][OK/NG][Data1][Data2][Data3][x]

21. On timer (Repeat/Time) (Command: f d)

Configures On Timer (Repeat/Time) settings.

Transmission

[f][d][ ][Set ID][ ][Data1][ ][Data2][ ][Data3][Cr]

Data1

1. f1h to f7h (reading data)

F1: reads the 1st On Timer data

F2: reads the 2nd On Timer data

F3: reads the 3rd On Timer data

F4: reads the 4th On Timer data

F5: reads the 5th On Timer data

F6: reads the 6th On Timer data

F7: reads the 7th On Timer data

2. e1h-e7h (delete one index), e0h (delete all indexes)

E0: erases all On Timer settings

E1: erases the 1st On Timer setting

E2: erases the 2nd On Timer setting

E3: erases the 3rd On Timer setting

E4: erases the 4th On Timer setting

E5: erases the 5th On Timer setting

E6: erases the 6th On Timer setting

E7: erases the 7th On Timer setting

3. 01h to 0Ch (sets the day of the week for the On Timer)

01: Once

02. Daily

03: Mon - Fri

04: Mon - Sat

05: Sat - Sun

06. Every Sunday

07. Every Monday

08. Every Tuesday

09. Every Wednesday

0A. Every Thursday

0B. Every Friday

0C. Every Saturday

Data2 00 to 17: 00 to 23 hours

Data3 00 to 3B: 00 to 59 minutes

* To read or delete an On Time schedule list, [Data2][Data3] must be set to FF.

Example 1: fd 01 f1 ff ff - reads the first index data from On Timer.

Example 2: fd 01 e1 ff ff - deletes the first index data from On Timer.

Example 3: fd 01 04 02 03 - sets On Timer to 02:03 from Monday to Saturday.

* This function is only available when Time 1 (year/month/day) and Time 2 (hour/minute/second) are set.

* This feature functions normally only after 22. On Timer Input has been entered.

Acknowledgement

[d][ ][Set ID][ ][OK/NG][Data1][Data2][Data3][x]

22. On Timer Input (Command: f u)

Select an external input for the current On Time setting and add a new schedule.

Transmission

[f][u][ ][Set ID][ ][Data1][Cr]

[f][u][ ][Set ID][ ][Data1][][Data2][Cr]

Data (adding schedule)

40: COMPONENT

60: RGB

70: DVI-D

A0: HDMI1

A1: HDMI2/OPS

A2: OPS/HDMI3/DVI-D

A5: OPS/DVI-D

A6: HDMI3/DVI-D

A8: OPS

D0: DISPLAYPORT

Data1 (Read schedule)

1. f1h to f7h (Read data)

F1: Select the 1st schedule input

F2: Select the 2nd schedule input

F3: Select the 3rd schedule input

F4: Select the 4th schedule input

F5: Select the 5th schedule input

F6: Select the 6th schedule input

F7: Select the 7th schedule input

Data2 (Read schedule)

FF

* To read the schedule input, enter FF for [Data2].

If no schedule is available for [Data1] when attempting to read the schedule data, the text 'NG' will be displayed and the operation will fail.

(Example 1: fu 01 90 - Move each schedule input down one row and save the 1st schedule input in HDMI mode.)

(Example 2: fu 01 f1 ff - Read the 1st schedule input.)

* This function is only supported when 1 (year/month/date), 2 (hour/minute/second) and On Time (repeat mode/time) are set.

* This feature operates as the last input.

* Input is possible in PC or DTV format during transmission and output is in PC format for acknowledgment.

(e.g. For HDMI1, both 0x90 and 0xA can be input, while 0xA0 is printed for acknowledgment.)

** This may not be supported on some models.

Acknowledgement

[u][ ][Set ID][ ][OK/NG][Data][x]

[u][ ][Set ID][ ][OK/NG][Data1][Data2][x]

23. No Signal Power Off (15Min) (Command: f g)

Sets the monitor to enter Automatic Standby mode if there is no signal for 15 minutes.

Transmission

[f][g][ ][Set ID][ ][Data][Cr]

Data 00: Off
01: On

Acknowledgement

[g][ ][Set ID][ ][OK/NG][Data][x]

24. Auto Power Off (4 Hours) (Command: m n)

Sets the monitor to enter Auto Power Off after 4 hours.

Transmission

[m][n][ ][Set ID][ ][Data][Cr]

Data 00: Off
01: 4 hours

Acknowledgement

[n][ ][Set ID][ ][OK/NG][Data][x]

25. Language (Command: f i)

Sets the OSD language.

Transmission

[f][i][ ][Set ID][ ][Data][Cr]

Data 00: Czech
01: Danish
02: German
03: English
04: Spanish (Europe)
05: Greek
06: French
07: Italian
08: Dutch
09: Norwegian
0A: Portuguese
0B: Portuguese (Brazil)
0C: Russian
0D: Finnish
0E: Swedish
0F: Korean
10: Chinese (Mandarin)
11: Japanese
12: Chinese (Cantonese)
13: Arabic

Acknowledgement

[i][ ][Set ID][ ][OK/NG][Data][x]

26. Reset (Command: f k)

Performs the reset function.

Screen Reset can only be performed in RGB input mode.

Transmission

[f][k][ ][Set ID][ ][Data][Cr]

Data 00: Picture Reset
01: Screen reset
02: Initial Settings

Acknowledgement

[k][ ][Set ID][ ][OK/NG][Data][x]

** It may not be supported depending on the model.

27. Current temperature (Command: d n)

Checks the inside temperature.

Transmission

[d][n][ ][Set ID][ ][Data][Cr]

Data FF: Check the status

Acknowledgement

[n][ ][Set ID][ ][OK/NG][Data][x]

* Temperature is displayed as a hexadecimal value.

28. Key (Command: m c)

Sends a key code for the IR remote control.

Transmission

[m][c][ ][Set ID][ ][Data][Cr]

Data IR_KEY_CODE

Acknowledgement

[c][ ][Set ID][ ][OK/NG][Data][x]

For key codes, see IR Codes.

* Some key codes are not supported depending on the model.

29. Time Elapsed (Command: d l)

Checks the elapsed time.

Transmission

[d][l][ ][Set ID][ ][Data][Cr]

Data FF: Read status

Acknowledgement

[l][ ][Set ID][ ][OK/NG][Data][x]

* The data received is shown as a hexadecimal value.

30. Product serial number (Command: f y)

Checks the serial number of the product.

Transmission

[f][y][ ][Set ID][ ][Data][Cr]

Data FF: Check product serial number

Acknowledgement

[y][ ][Set ID][ ][OK/NG][Data][x]

* Data is in ASCII code.

31. Software Version (Command: f z)

Checks the software version of the product.

Transmission

[f][z][ ][Set ID][ ][Data][Cr]

Data FF: Check software version

Acknowledgement

[z][ ][Set ID][ ][OK/NG][Data][x]

32. White balance red gain (Command: j m)

Adjusts the white balance red gain value.

Transmission

[j][m][ ][Set ID][ ][Data][Cr]

Data 00 to FE: Red Gain 0 to 254
FF: checks the red gain value

Acknowledgement

[m][ ][Set ID][ ][OK/NG][Data][x]

33. White Balance Green Gain (Command: j n)

Adjusts the white balance green gain value.

Transmission

[j][n][ ][Set ID][ ][Data][Cr]

Data 00 to FE: Green Gain 0 to 254
FF: checks the green gain value

Acknowledgement

[n][ ][Set ID][ ][OK/NG][Data][x]

34. White Balance Blue Gain (Command: j o)

Adjusts the white balance blue gain value.

Transmission

[j][o][ ][Set ID][ ][Data][Cr]

Data 00 to FE: Blue Gain 0 to 254
FF: checks the blue gain value

Acknowledgement

[o][ ][Set ID][ ][OK/NG][Data][x]

35. White Balance Red Offset (Command: s x)

Adjusts the white balance red offset value.

Transmission

[s][x][ ][Set ID][ ][Data][Cr]

Data 00 to 7F: Red Offset 0 to 127
FF: checks the red offset value

Acknowledgement

[x][ ][Set ID][ ][OK/NG][Data][x]

36. White Balance Green Offset (Command: s y)

Adjusts the white balance green offset value.

Transmission

[s][y][ ][Set ID][ ][Data][Cr]

Data 00 to 7F: Green Offset 0 to 127
FF: checks the green offset value

Acknowledgement

[y][ ][Set ID][ ][OK/NG][Data][x]

37. White Balance Blue Offset (Command: s z)

Adjusts the white balance blue offset value.

Transmission

[s][z][ ][Set ID][ ][Data][Cr]

Data 00 to 7F: Blue Offset 0 to 127
FF: checks the blue offset value

Acknowledgement

[z][ ][Set ID][ ][OK/NG][Data][x]

38. Backlight (Command: m g)

Adjusts the backlight brightness.

Transmission

[m][g][ ][Set ID][ ][Data][Cr]

Data 00 to 64: Backlight 0 to 100

Acknowledgement

[g][][set ID][][OK/NG][Data][x]

39. Screen Off (Command: k d)

Turns the screen on or off.

Transmission

[k][d][ ][Set ID][ ][Data][Cr]

Data 00: turns the screen on
01: turns the screen off

Acknowledgement

[d][ ][Set ID][ ][OK/NG][Data][x]

** This may not be supported on some models.

** Dual-screen models must use the screen off commands in 88. Dual Screen Off.

40. Tile Mode (Command: d d)

Sets the Tile Mode and sets values for the tile rows and columns.

Transmission

[d][d][ ][Set ID][ ][Data][Cr]

Data 00 to FF: The first byte - tile column
The second byte - tile row

* 00, 01, 10, and 11 mean that the tile mode is off

** The maximum value may differ depending on the model.

Acknowledgement

[d][ ][Set ID][ ][OK/NG][Data][x]

* It may not be supported depending on the model.

41. Check Tile Mode (Command: d z)

Checks the tile mode.

Transmission

[d][z][ ][Set ID][ ][Data][Cr]

Data FF: checks the tile mode

Acknowledgement

[z][ ][Set ID][ ][OK/NG][Data1][Data2][Data3][x]

Data1 00: tile mode off
01: tile mode on

Data2 00 to 0F: tile column

Data3 00 to 0F: tile row

* It may not be supported depending on the model.

42. Tile ID (Command: d i)

Sets the tile ID value of the product.

Transmission

[d][i][ ][Set ID][ ][Data][Cr]

Data 01 to E1: Tile ID 1 to 225**

FF: checks the tile ID

** The data value cannot exceed the value of row x column.

Acknowledgement

[i][ ][Set ID][ ][OK/NG][Data][x]

* When a data value that exceeds the value of row x column is entered (except 0xFF),

ACK becomes NG.

* It may not be supported depending on the model.

43. Natural Mode (in Tile mode) (Command: d j)

When displaying the image naturally, the part of the image that would normally be displayed in the gap between the monitors is omitted.

Transmission

[d][j][ ][Set ID][ ][Data][Cr]

Data 00: Off
01: On

Acknowledgement

[j][ ][Set ID][ ][OK/NG][Data][x]

* It may not be supported depending on the model.

44. DPM Select (Command: f j)

To set the DPM (Display Power Management) function.

Transmission

[f][j][ ][Set ID][ ][Data][Cr]

Data 00: Off
01: 5 seconds
02: 10 seconds
03: 15 seconds
04: 1 minutes
05: 3 minutes
06: 5 minutes
07: 10 minutes

Acknowledgement

[j][ ][Set ID][ ][OK/NG][Data][x]

45. Remote Control/Local Key Lock (Command: k m)

Adjusts the remote control/local key (front) lock.

Transmission

[k][m][ ][Set ID][ ][Data][Cr]

Data 00: Off (Lock Off)
01: On (Lock On)

* When the monitor is turned off, the power key works even in On (01) mode.

Acknowledgement

[m][ ][Set ID][ ][OK/NG][Data][x]

46. Power On Delay (Command: f h)

Sets the schedule delay when the power turns on. (unit: seconds).

Transmission

[f][h][ ][Set ID][ ][Data][Cr]

Data 00 to FA: min. 0 to maximum 250 (seconds)

* The maximum value may differ depending on the model.

Acknowledgement

[h][ ][Set ID][ ][OK/NG][Data][x

47. Fail Over Select (Command: m i)

Selects an input mode for auto switch.

Transmission

[m][i][ ][Set ID][ ][Data][Cr]

Data 00: Off
01: Auto
02: Manual

Acknowledgement

[i][ ][Set ID][ ][OK/NG][Data][x]

48. Fail Over Input Select (Command: m j)

Selects an input source for auto switch.

* This command is only available when the Fail Over (auto) mode is set to Custom.

Transmission

[m][j][ ][Set ID][ ][Data1][ ][Data2][ ][Data3][ ] [Data4]...[ ][DataN][Cr]

Data 1 to N-1 (Input priority: 1 to N-1)
40: COMPONENT
60: RGB
70: DVI-D
90: HDMI1
91: HDMI2/OPS
92: OPS/HDMI3/DVI-D
95: OPS/DVI-D
96: HDMI3/DVI-D
98: OPS
C0: DISPLAYPORT

Data N: E0: INTERNAL Memory
E1: USB
E2: SD CARD

Acknowledgement

[j][ ][SetID][ ][OK/NG][Data1][Data2][Data3][Data4] ...[DataN] [x]

* Some input signals may not be supported on some models.
* The data number (N) may vary depending on the model. (The data number depends on the number of supported input signals.)
* Only values under Data N (e.g. E0, E1, E2) are allowed as the last data value and may not be supported depending on the model.
* This feature operates as the last input and supports data in DTV format.

49. IR Operation (Command: t p)

Configures the IR operation settings of the product.

Transmission

[t][p][ ][Set ID][ ][Data][Cr]

Data 00: locks off all of the keys
01: locks on all of the keys except the Power key
02: locks on all of the keys

Acknowledgement

[x][ ][Set ID][ ][OK/NG][Data][x]

* When the monitor is turned off, the power key works even in the locks on all of the keys (02) mode.

50. Local Key Operation (Command: t o)

Configures the local key operation settings of the product.

Transmission

[t][o][ ][Set ID][ ][Data][Cr]

Data 00: locks off all of the keys
01: locks on all of the keys except the Power key
02: locks on all of the keys

Acknowledgement

[o][ ][Set ID][ ][OK/NG][Data][x]

* When the monitor is turned off, the power key works even in the locks on all of the keys (02) mode.

51. Status (Command: s v)

Checks the current signal status of the product.

Transmission

[s][v][ ][Set ID][ ][Data][ ][FF][Cr]

Data 02: checks whether there is a signal or not
03: check the PM mode.
05: Checks whether luminance sensors 1 and 2 work properly.
06: Luminance sensor being used:
07: Checks whether the Top, Bottom and Main temperature sensors are functioning normally.
08: The temperature of each temperature sensor when the monitor set was last powered off.
09: Fan Speed
10: RGB sensing OK/NG (Check Screen)

Acknowledgement

[v][ ][Set ID][ ][OK/NG][Data][Data1][x]

Data: 02 (when a signal is found)
Data1 00: no signal
01: there is a signal

Data: 03 (when checking the PM mode)
Data1 00: The PM mode is set to Screen On
01: The PM mode is set to Screen Off
02: The PM mode is set to Screen Off Always
03: In Sustain Aspect Ratio mode.
04: Screen Off & Backlight status (Outdoor mode)

Data: 05 (In the case of checking whether the luminance sensors work properly)
Data1 00: All normal
01: BLU sensor 1 normal, BLU sensor 2 down
02: BLU sensor 1 down, BLU sensor 2 normal
03: All sensors down

Data: 06 (In the case of the luminance sensors being used)
Data1 00: Luminance sensor 1 is being used
01: Luminance sensor 2 is being used

Data: 07 (In the case of checking whether the Top, Bottom and Main temperature sensors are functioning normally)
Data1 00: All temperature sensors are faulty.
01: Top normal, Bottom faulty, Main faulty
02: Top faulty, Bottom normal, Main faulty
03: Top normal, Bottom normal, Main faulty
04: Top faulty, Bottom faulty, Main normal
05: Top normal, Bottom faulty, Main normal
06: Top faulty, Bottom normal, Main normal
07: All temperature sensors are normal
Data: 10 (Check Screen)
Data1 00: Check Screen result NG
07: Check Screen result OK

*In 75XE3C models, the status will be displayed as normal if both the Top (Panel) and Top (PSU) are normal.

* Sets to NG when Check Screen is set to Off or not supported.

Data: 08 (In the case of checking the temperature of each temperature sensor when the monitor set was last powered off)

Acknowledgement

[v][ ][Set ID][ ][OK/NG][Data][Data1][Data2][Data3][x]

Data1: The temperature of the Top sensor when the monitor set was last powered off.
Data2: The temperature of the Bottom sensor when the monitor set was last powered off.
Data3: The temperature of the Main sensor when the monitor set was last powered off.

Data: 09 (In the case of Fan Speed)

Acknowledgement

[v][ ][Set ID][ ][OK/NG][Data][Data1][Data2][x]

Data1: 00-ff: The upper 1-byte of the fan speed
Data2: 00-ff: The lower 1-byte of the fan speed
Fan speed: 0 to 2008 in hexadecimal and 0 to 8200 in decimal

** This may not be supported on some models.

52. Check Screen (Command: t z)

Sets Check Screen.

Transmission

[t][z][ ][Set ID][ ][Data][Cr]

Data 00: Off
01: On

Acknowledgement

[z][ ][Set ID][ ][OK/NG][Data][x]

** It may not be supported depending on the model.

53. Speaker (Command: d v)

Sets the speaker function.

Transmission

[d][v][ ][Set ID][ ][Data][Cr]

Data 00: Off
01: On

Acknowledgement

[v][ ][Set ID][ ][OK/NG][Data][x]

** It may not be supported depending on the model.

54. Daylight Saving Time (Command: s d)

To set the Daylight Saving Time function.

Transmission

[s][d][ ][Set ID][ ][Data1][ ][Data2][ ][Data3][ ][Data4][ ][Data5][Cr]

Data 00: Off (Data2~5: FFH)
01: Start Time
02: End Time

Data2 01~0C: January to December

Data3 01~06: 1 ~ 6th week

* The maximum number of [Data3] differs depending on Date.

Data4 00~06 (Sun. ~ Sat.)

Data5 00~17: 00 ~ 23 hours

* To read the Start Time/End Time, enter FFH for [Data2]~[Data5].

(ex1: sd 01 01 ff ff ff ff - To check the Start Time

ex2: sd 01 02 ff ff ff ff - To check the End Time)

* This function is supported only when 1 (Year/Month/ Day) and 2 (Hour/Minute/Second) are set.

Acknowledgement

[d][ ][Set ID][ ][OK/NG][Data1][Data2][Data3][Data4][Data5][x]

** It may not be supported depending on the model.

55. PM Mode (Command: s n, 0c)

Selects the desired PM mode option.

Transmission

[s][n][ ][Set ID][ ][0c][ ][Data][Cr]

Data 00: Sets the Power Off mode.
01: Sets the Sustain Aspect Ratio mode.
02: Sets the Screen Off mode.
03: Sets the Screen Off Always mode.
04: Sets the Screen Off & Backlight mode (Outdoor mode)

Acknowledgement

[n][ ][Set ID][ ][OK/NG][0c][Data][x]

* It may not be supported depending on the model.

56. ISM Method (Command: j p)

Selects the ISM Method option.

Transmission

[j][p][ ][Set ID][ ][Data][Cr]

Data 01: Inversion
02: Orbiter
04: White Wash
08: Normal
20: Color Wash
80: Washing Bar
90: User Image
91: User Video

** The jp command works when Timer is set to Immediately.

Acknowledgement

[p][ ][Set ID][ ][OK/NG][Data][x]

* It may not be supported depending on the model.

57. Network Settings (Command: s n, 80 or 81 or 82)

Configures network and DNS settings.

Transmission

[s][n][ ][Set ID][ ][Data1][ ][Data2][ ][Data3][ ][Data4][ ] [Data5][Cr]

Data1 80: Configures/views the temporary IP mode (Auto/Manual), subnet mask, and gateway.
81: Configures/views the temporary DNS address.
82: Saves temporary settings and views information about the current network.

* If Data1 is 80,

Data2 00: Auto
01: Manual
FF: Views the temporary IP mode (Auto/Manual), subnet mask, and gateway.

** If Data2 is 01 (Manual),

Data3 : Manual IP address
Data4 : Subnet mask address
Data5 : Gateway address

* If Data1 is 81,

Data2 : DNS address
FF: Views the temporary DNS address.

* If Data1 is 82,

Data2 80: Applies the temporarily saved IP mode (Auto/Manual), subnet mask, and gateway.
81: Applies the temporary DNS address
FF: Information on the current network (IP, subnet gateway, DNS)

*** Examples of settings

1. Auto: sn 01 80 00
2. Manual: sn 01 80 01 010177223241 255255254000 010177222001 (IP: 10.177.223.241, subnet: 255.255.254.0, gateway: 10.177.222.1)
3. Network read: sn 01 80 ff
4. DNS setting: sn 01 81 156147035018 (DNS: 156.147.35.18)
5. Applying the settings: sn 01 82 80 (applies the saved IP mode (auto/manual), subnet mask, and gateway)
   sn 01 82 81 (applies the saved DSN)

**** Each IP address contains 12 decimal digits .

Acknowledgement

[n][ ][Set ID][ ][OK/NG][Data1][Data][x]

* It may not be supported depending on the model.

** This feature is available only for wired networks.

58. Auto-adjustment (Command: j u)

Automatically corrects the position and shaking of the picture. (Works only in RGB-PC input mode.)

Transmission

[j][u][ ][Set ID][ ][Data][Cr]

Data 01: Execution

Acknowledgement

[u][ ][Set ID][ ][OK/NG][Data][x]

* It may not be supported depending on the model.

59. H Position (Command: f q)

Adjusts the horizontal position of the screen. This feature only works when the Tile Mode is set to Off.

* The operational range varies depending on the RGB input resolution. (Works only in RGB-PC input mode.)

Transmission

[f][q][ ][Set ID][ ][Data][Cr]

Data 00-64: Min -50 (Left) to Max 50 (Right)

Acknowledgement

[q][ ][Set ID][ ][OK/NG][Data][x]

* It may not be supported depending on the model.

60. V Position (Command: f r)

Adjusts the vertical position of the screen. This feature only works when the Tile Mode is set to Off.
* The operational range varies depending on the RGB input resolution. (Works only in RGB-PC input mode.)

Transmission
[f][r][ ][Set ID][ ][Data][Cr]

Data 00-64: Min -50 (Down) to Max 50 (Up)

Acknowledgement
[r][ ][Set ID][ ][OK/NG][Data][x]

* It may not be supported depending on the model.

61. H Size (Command: f s)

Adjusts the horizontal size of the screen. This feature only works when the Tile Mode is set to Off.
* The operational range varies depending on the RGB input resolution. (Works only in RGB-PC input mode.)

Transmission
[f][s][ ][Set ID][ ][Data][Cr]

Data 00-64: Min -50 (Small) to Max 50 (Large)

Acknowledgement
[s][ ][Set ID][ ][OK/NG][Data][x]

* It may not be supported depending on the model.

62. Power On Status (Command: t r)

Selects the desired Power On status option.

Transmission
[t][r][ ][Set ID][ ][Data][Cr]

Data 00: LST (Stays in the previous status)
01: STD (Stays powered off)
02: PWR (Stays powered on)

Acknowledgement
[r][ ][Set ID][ ][OK/NG][Data][x]

63. Wake On LAN (Command: f w)

Selects the desired Wake On LAN option.

Transmission
[f][w][ ][Set ID][ ][Data][Cr]

Data 00: Off
01: On

Acknowledgement
[w][ ][Set ID][ ][OK/NG][Data][x]

64. Intelligent Auto (Command: t i)

Selects the desired Intelligent Auto option.

Transmission
[t][i][ ][Set ID][ ][Data][Cr]

Data 00: Off
01: On

Acknowledgement
[i][ ][Set ID][ ][OK/NG][Data][x]

* It may not be supported depending on the model.

65. OSD Portrait Mode (Command: t h)

Selects the desired Portrait mode option.

Transmission
[t][h][ ][Set ID][ ][Data] [Cr]

Data 00: Off
01: 90 degrees
02: 270 degrees
03: 180 degrees

Acknowledgement
[h][ ][Set ID][ ][OK/NG][Data] [x]

* It may not be supported depending on the model.

66. Reset to Initial Settings (Command: t n)

Enables/disables the Reset to Initial settings.

Transmission

[t][n][ ][Set ID][ ][Data] [Cr]

Data 00: Disables the settings.
01: Enables the settings.

Acknowledgement

[n][ ][Set ID][ ][OK/NG][Data] [x]

* It may not be supported depending on the model.

67. Time Sync (Command: s n, 16)

Configures the Time Sync.

Transmission

[s][n][ ][Set ID][ ][1][6][ ][Data][Cr]

Data 00: Off
01: On

* This feature works in the Master mode.
** This feature does not work if the current time is not set.

Acknowledgement

[n][ ][Set ID][ ][OK/NG][ ][1][6][ ][Data][x]

* It may not be supported depending on the model.

68. Contents Sync (Command: t g)

Configures the Contents Sync.

Transmission

[t][g][ ][Set ID][ ][Data][Cr]

Data 00: Off
01: On

Acknowledgement

[g][ ][Set ID][ ][OK/NG][Data][x]

* It may not be supported depending on the model.

69. Pivot Mode (Command: t a)

Sets Pivot Mode to on/off.

Transmission

[t][a][ ][Set ID][ ][Data][Cr]

Data 00: Off
01: On

Acknowledgement

[a][ ][Set ID][ ][OK/NG][Data][x]

* This feature may not be supported in certain models.

70. Studio Mode (Command: s n, 83)

Sets Studio Mode to on/off.

Transmission

[s][n][ ][Set ID][ ][8][3][ ][Data][Cr]

Data 00: Off
01: On

Acknowledgement

[n][ ][Set ID][ ][OK/NG][8][3][Data][x]

* This feature may not be supported in certain models.

71. LAN Daisy Chain (Command: s n, 84)

Sets LAN Daisy Chain to on/off.

Transmission

[s][n][ ][Set ID][ ][8][4][ ][Data][Cr]

Data 00: Off
01: On

Acknowledgement

[n][ ][Set ID][ ][OK/NG][8][4][Data][x]

* This feature may not be supported in certain models.

72. Content Rotation (Command: s n, 85)

Sets Content Rotation to on/off.

Transmission

[s][n][ ][Set ID][ ][8][5][ ][Data][Cr]

Data 00: Off
01: 90 degrees
02: 270 degrees
03: 180 degrees

Acknowledgement

[n][ ][Set ID][ ][OK/NG][8][5][Data][x]

* This feature may not be supported in certain models.

73. DPM Wake up Control (Command: s n, 0b)

Sets the DPM Wake up Control Mode.

Transmission

[s][n][ ][Set ID][ ][0][b][ ][Data][Cr]

Data 00: Clock
01: Clock+DATA

Acknowledgement

[n][ ][Set ID][ ][OK/NG][0][b][Data][x]

* This feature may not be supported in certain models.

74. Scan Inversion (Command: s n, 87)

Sets Scan Inversion to on/off.

Transmission

[s][n][ ][Set ID][ ][8][7][ ][Data][Cr]

Data 00: Off
01: On

Acknowledgement

[n][ ][Set ID][ ][OK/NG][8][7][Data][x]

* This feature may not be supported in certain models.

75. Beacon (Command: s n, 88)

Sets Beacon to on/off.

Transmission

[s][n][ ][Set ID][ ][8][8][ ][Data][Cr]

Data 00: Off
01: On

Acknowledgement

[n][ ][Set ID][ ][OK/NG][8][8][Data][x]

* This feature may not be supported in certain models.

76. Aspect Ratio (Rotation) (Command: s n, 89)

Controls the Aspect Ratio (Rotation) screen.

(This command works only when Content Rotation is on.)

Transmission

[s][n][ ][Set ID][ ][8][9][ ][Data][Cr]

Data 00: Full
01: Original

Acknowledgement

[n][ ][Set ID][ ][OK/NG][8][9][Data][x]

* This feature may not be supported in certain models.

77. Easy Brightness Control Mode (Command: s m)

Selects whether to turn on/off Easy Brightness Control Mode.

Transmission

[s][m][ ][Set ID][ ][Data][Cr]

Data 00: Easy Brightness Control off
01: Easy Brightness Control on

* This feature does not work if the current time is not set.

** This may not be supported on some models.

Acknowledgement

[m][ ][Set ID][ ][OK/NG][Data][x]

78. Easy Brightness Control Schedule (Command: s s)

Sets Easy Brightness Control schedules.

Transmission

[s][s][ ][Set ID][ ][Data1][ ][Data2][ ][Data3][Cr]

Data1

1. F1–F6 (reads data)

F1: Reads the 1st data from the Easy Brightness Control

F2: Reads the 2nd data from the Easy Brightness Control

F3: Reads the 3nd data from the Easy Brightness Control

F4: Reads the 4th data from the Easy Brightness Control

F5: Reads the 5th data from the Easy Brightness Control

F6: Reads the 6th data from the Easy Brightness Control

2. FF: Reads all stored lists

3. e1-e6 (deletes one index); e0 (deletes all indexes)

E0: Deletes all Easy Brightness Control.

E1: Deletes the 1st Easy Brightness Control.

E2: Deletes the 2nd Easy Brightness Control.

E3: Deletes the 3rd Easy Brightness Control.

E4: Deletes the 4th Easy Brightness Control.

E5: Deletes the 5th Easy Brightness Control.

E6: Deletes the 6th Easy Brightness Control.

4. 00 to 17: 00th to 23th hour

Data2 00 to 3B: 00th to 59th minute

Data3 00 to 64: Backlight, 0 to 100

* If you want to read or delete the configured Easy Brightness Control lists, set [Data2][Data3] to FF.

* If you want to import all the configured Easy Brightness Control lists through FF, do not enter any values in [Data2] [Data3].

* When all the configured Easy Brightness Control lists are imported through FF, OK is acknowledged even if there is no stored list.

Example 1: ss 01 f1 ff ff - Reads the first index data from the Easy Brightness Control.

Example 2: ss 01 ff - Reads all index data from the Easy Brightness Control.

Example 3: ss 01 e1 ff ff - Deletes the first index data from the Easy Brightness Control.

Example 4: ss 01 07 1E 46 - Adds a schedule whose time is 07:30 and whose backlight is 70.

Acknowledgement

[s][ ][Set ID][ ][OK/NG][Data1][Data2][Data3][x]

* This feature may not be supported in certain models.

79. MultiScreen Mode & Input (Command: x c)

Saves or controls the MultiScreen Mode and input.

Transmission

[x][c][ ][Set ID][ ][Data1][ ][Data2][ ][Data3[ ][Data4] [ ][Data5[ ]Cr]

Data1 (sets the MultiScreen Mode)

10: PIP

22: PBP2

23: PBP3

24: PBP4

Data2 (sets the MultiScreen Main Input)

Data3 (sets the MultiScreen Sub1 Input)

Data4 (sets the MultiScreen Sub2 Input)

Data5 (sets the MultiScreen Sub3 Input)

20: AV

40: COMPONENT

60: RGB

80: DVI-D

90: HDMI1

91: HDMI2/OPS

92: OPS/HDMI3/DVI-D

95: OPS/DVI-D

96: HDMI3/DVI-D

98: OPS

C0: DISPLAYPORT

Acknowledgement

[c][ ][Set ID][ ][OK/NG][ ][Data1][Data2][Data3] [Data4] [Data5][x]

* This feature may not be supported in certain models.

** Only the input modes supported by the model works.

*** This feature operates as the last input, and supports data in DTV format.

80. Aspect Ratio (MultiScreen) (Command: x d)

Saves or controls the Aspect Ratio (MultiScreen) screen.

Transmission

[x][d][ ][Set ID][ ][Data1][ ][Data2][Cr]

Data1 01: Controls the Main input

02: Controls the Sub1 input

03: Controls the Sub2 input

04: Controls the Sub3 input

Data2 00: Full

01: Original

Acknowledgement

[d][ ][Set ID][ ][OK/NG][Data1][Data2][x]

* This feature may not be supported in certain models.

81. Screen Mute (MultiScreen) (Command: x e)

Turns on/off each screen in MultiScreen.

Transmission

[x][e][ ][Set ID][ ][Data1][ ][Data2][Cr]

Data1 01: Controls the Main input
02: Controls the Sub1 input
03: Controls the Sub2 input
04: Controls the Sub3 input

Data2 00: Turns the screen on.
01: Turns the screen off.

* This function works when the Multi Screen App is running.

** This function may not work properly if there is no signal.

Acknowledgement

[e][ ][Set ID][ ][OK/NG][Data1][Data2][x]

* This feature may not be supported in certain models.

82. Screen Off Always (Command: s n, 0d)

Screen Off Always has the same effect as entering the Screen Off menu regardless of the PM Mode setting.

Transmission

[s][n][ ][Set ID][ ][0][d][ ][Data][Cr]

Data 00: Off
01: On

Acknowledgement

[n][ ][Set ID][ ][OK/NG][0][d][Data][x]

* This feature may not be supported in certain models.

83. Screen Video Freeze (Command: k x)

Turns on/off the video freeze function.

Transmission

[k][x][ ][Set ID][ ][Data][Cr]

Data 00: Turns on the freeze function.
01: Turns off the freeze function.

* Available in single input mode.

Acknowledgement

[x][ ][Set ID][ ][OK/NG][Data][x]

* This feature may not be supported in certain models.

84. Wireless Wake-on-LAN (Command: s n, 90)

Sets Wireless Wake-on-LAN.

Transmission

[s][n][ ][Set ID][ ][9][0][ ][Data][Cr]

Data 00: Off
01: On

Acknowledgement

[n][ ][Set ID][ ][OK/NG][9][0][Data][x]

* This feature may not be supported in certain models.

85. JustScan Toggle (Command: s n, 91)

Sets JustScan.

Transmission

[s][n][ ][Set ID][ ][9][1][ ][Data][Cr]

Data 00 : Off
01 : On

Acknowledgement

[n][ ][Set ID][ ][OK/NG][9][1][Data][x]

* This feature may not be supported in certain models.

86. Holiday Schedule Mode (Command: s n, 1a)

Turns Holiday Schedule mode on or off.

Transmission

[s][n][ ][Set ID][ ][1][a][ ][Data][Cr]

Data 00: Holiday Schedule off
01: Holiday Schedule on

* This feature does not work if the current time is not set.

** Depending on the model, this feature may not be supported.

Acknowledgement

[n][ ][Set ID][ ][OK/NG][ ][1][a][ ][Data][x]

87. Holiday Schedule (Command: s n, 1b)

Configures the Holiday Schedule.

Transmission

[s][n][ ][Set ID]][ ][1][a]

[ ][Data1][ ][Data2][ ][Data3] [ ][Data4] [Cr]

Data1

1. f1–f7 (Data Reading Functions)

f1: Reads data of 1st Holiday Schedule

f2: Reads data of 2nd Holiday Schedule

f3: Reads data of 3rd Holiday Schedule

f4: Reads data of 4th Holiday Schedule

f5: Reads data of 5th Holiday Schedule

f6: Reads data of 6th Holiday Schedule

f7: Reads data of 7th Holiday Schedule

2. FF: Reads all stored lists

3. e1–e7 (Deletes one index), e0 (Deletes all indexes)

e0: Deletes all Holiday Schedules

e1: Deletes 1st Holiday Schedule

e2: Deletes 2nd Holiday Schedule

e3: Deletes 3rd Holiday Schedule

e4: Deletes 4th Holiday Schedule

e5: Deletes 5th Holiday Schedule

e6: Deletes 6th Holiday Schedule

e7: Deletes 7th Holiday Schedule

4. 01–0c: Month 01 to 12 (Start Month)

Data2 01–1F: Day 01 to 31 (Start Day)

Data3 01–0c: Month 01 to 12 (End Month)

Data4 01–1F: Day 01 to 31 (End Day)

* If you want to read or delete the configured Holiday Schedule lists, set [Data2][Data3][Data4] to FF.

* When reading all configured Holiday Schedule lists, set [Data1][Data2][Data3][Data4] to FF.

ex1: sn 01 1b f1 ff ff ff – Reads the 1st index data in the Holiday Schedule.

ex2: sn 01 1b ff ff ff ff – Reads all index data in the Holiday Schedule.

ex3: sn 01 1b e1 ff ff ff – Deletes the 1st index data in the Holiday Schedule.

ex4: sn 01 1b 01 07 0c 18 – Adds Holiday Schedule from January 7 to December 24.

* Schedules set beforehand are not added.

* This feature does not work if the current time is not set.

** Depending on the model, this feature may not be supported.

Acknowledgement

[s][ ][Set ID][ ][OK/NG][Data1][Data2][Data3][x]

88. Dual Screen Off (Command: s n, 92)

Turn Dual Screen On or Off.

Transmission

[s][n][ ][Set ID][ ][9][2][ ][Data][Cr]

Data 00 : MainScreen – On / SubScreen – On

01 : MainScreen – Off / SubScreen – On

02 : MainScreen – On / SubScreen – Off

Acknowledgement

[n][ ][Set ID][ ][OK/NG][9][2][Data][x]

* This feature may not be supported in certain models.

89. Fan control (Command: d o)

Sets the fan mode.

Transmission

[d][o][ ][Set ID][ ][Data][Cr]

Data 00: Auto

01: On

02: Manual

03: Off

** This may not be supported on some models.

Acknowledgement

[o][ ][Set ID][ ][OK/NG][Data][x]

90. Fan Failure Check (Command: d w)

Checks for fan failures.

Transmission

[d][w][ ][Set ID][ ][Data][Cr]

Data FF: Read status

Acknowledgement

[w][ ][Set ID][ ][OK/NG][Data1] [Data2] [x]

Data 1 00: One or more fans are faulty.

01: All fans are normal.

02: The model has no fan.

Data2 00: No fan is faulty (all fans are normal).

01: 1 fan is faulty.

02: 2 fans are faulty.

03: 3 fans are faulty.

04: 4 fans are faulty.

05: 5 fans are faulty.

06: 6 fans are faulty.

07: 7 fans are faulty.

08: 8 fans are faulty.

09: 9 fans are faulty.

0A: 10 fans are faulty.

91. Luminance Value Read (Command: m u)

Reads luminance value.

Transmission

[m][u][ ][Set ID][ ][FF][Cr]

Acknowledgement

[u][][SetID][][OK/NG][Data1][Data2][Data3]
[Data4][Data5][Data6][Data7][x]

Data1 00–64: The Backlight PWM value (0 to 100)

Data2 00–ff: The upper 1-byte of the value measured by the CA210.

Data3 00–ff: The lower 1-byte of the value measured by the CA210.

CA210 measurement: 0000 to ffff in hexadecimal and 0 to 65535 in decimal.

Data4 00–ff: The upper 1-byte of the value measured by BLU 1 sensor.

Data5 00–ff: The lower 1-byte of the value measured by BLU 1 sensor.

Data6 00–ff: The upper 1-byte of the value measured by BLU 2 sensor.

Data7 00–ff: The lower 1-byte of the value measured by BLU 2 sensor.

BLU measurement: 0000 to ffff in hexadecimal and 0 to 65535 in decimal.

* During final assembly, a CA210 measurement is entered through the calibration procedure. The default value, before calibration, is 0.

** This may not be supported on some models.

92. BLU Maintenance (Command: m t)

Selects whether to turn on/off BLU Maintenance.

Transmission

[m][t][ ][Set ID][ ][Data][Cr]

Data 00: BLU Maintenance Off
01: BLU Maintenance On

** This may not be supported on some models.

Acknowledgement

[t][ ][Set ID][ ][OK/NG][Data][x]

93. Power Indicator (Command: f o)

Sets the Power Indicator Settings.

Transmission

[f][o][ ][Set ID][ ][Data][Cr]

Data 00: Off
01: On

** This may not be supported on some models.

Acknowledgement

[o][ ][Set ID][ ][OK/NG][Data][x]

94. OSD Display (Command: k l)

Selects the desired OSD Display option.

Transmission

[k][l][ ][Set ID][ ][Data][Cr]

Data 00: No (Off)
01: Yes (On)

Acknowledgement

[l][ ][Set ID][ ][OK/NG][Data][x]

* This feature may not be supported for certain models.

95. Semi-Transparent Brightness (Command: s n, 95)

Controls semi-transparent mode LED brightness.

Transmission

[s][n][ ][Set ID][ ][9][5][ ][Data][Cr]

Data 00 to 64: LED brightness 0 to 100

Acknowledgment

[n][ ][Set ID][ ][OK/NG][9][5][Data][x]

* This feature may not be supported for some models.

96. Hybrid Mode (Command: s n, 96)

Sets display's transparency mode.

Transmission

[s][n][ ][Set ID][ ][9][6][ ][Data][Cr]

Data 00 : Hybrid (effect: Off)
01 : Hybrid (effect: Full white)
02 : Semi-Transparent

Acknowledgment

[n][ ][Set ID][ ][OK/NG][9][6][Data][x]

* This feature may not be supported for some models.

97. Return Interval (Command: s n, 97)

Controls length of time transparent mode is maintained.

Transmission

[s][n][ ][Set ID][ ][9][7][ ][Data][Cr]

Data 00 to 0a: Time maintained 0 to 10

Acknowledgment

[n][ ][Set ID][ ][OK/NG][9][7][Data][x]

* This feature may not be supported for some models.

98. Proximity Sensitivity (Command: s n, 98)

Sets proximity sensor sensitivity.

Transmission

[s][n][ ][Set ID][ ][9][8][ ][Data][Cr]

Data 00 : High
01 : Mid
02: Low

Acknowledgment

[n][ ][Set ID][ ][OK/NG][9][8][Data][x]

* This feature may not be supported for some models.

99. HDMI IT Contents (Command: s n, 99)

Uses HDMI data to automatically set Picture Mode.

Transmission

[s][n][ ][Set ID][ ][9][9][ ][Data][Cr]

Data 00: Off

01: On

Acknowledgment

[n][ ][Set ID][ ][OK/NG][9][9][Data][x]

* This feature may not be supported for some models.

100. UPnP Mode (Command: s n, 9c)

Sets the desired UPnP mode.

Transmission

[s][n][ ][Set ID][ ][9][c][ ][Data][Cr]

Data 00: Off
01: On

Acknowledgment

[n][ ][Set ID][ ][OK/NG][9][c][Data][x]

*This feature may not be supported on some models.
*If the UPnP Mode is changed, a reboot will occur.

101. Model Name check (Command: f v)

Checks the Model Name.

Transmission

[f][v][ ][Set ID][ ][Data][Cr]

Data FF: Check product serial number

Acknowledgment

[v][ ][Set ID][ ][OK/NG][Data][x]

*Data is in hexadecimal ASCII code.

102. No Signal Image (Command: s n, a9)

Turns No Signal Image On or Off.

Transmission

[s][n][ ][Set ID][ ][a][9][ ][Data][Cr]

Data 00: Off
01: On

Acknowledgment

[n][ ][Set ID][ ][OK/NG][a][9][Data][x]

*This feature may not be supported on some models.


LG
Life's Good