LG
Life's Good

QNED86*

www.lg.com

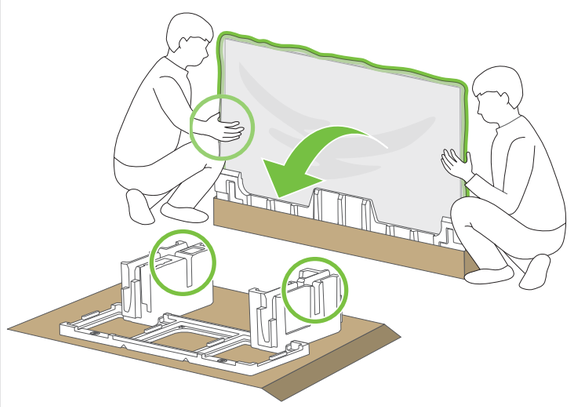

MFL71949153230 5REV02

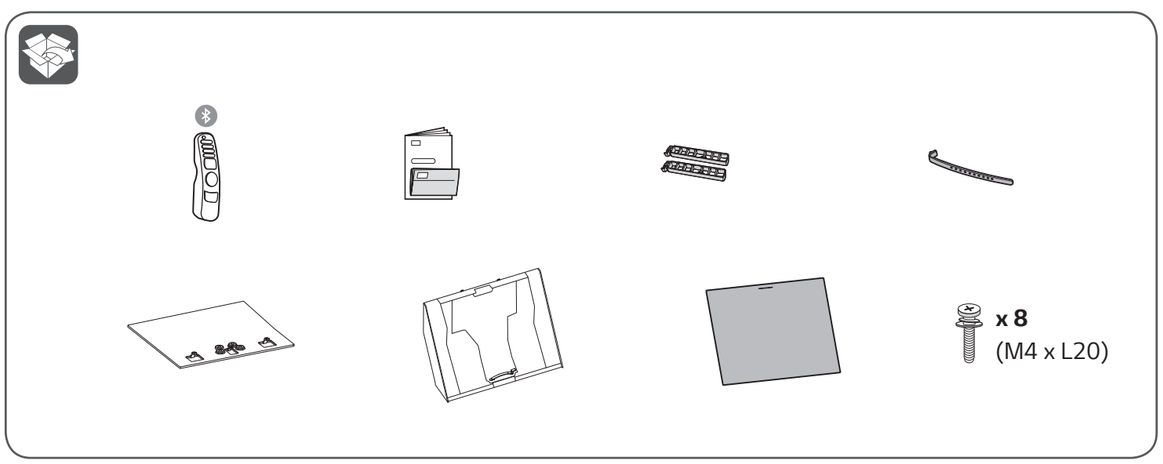

1-A
75QNED86*

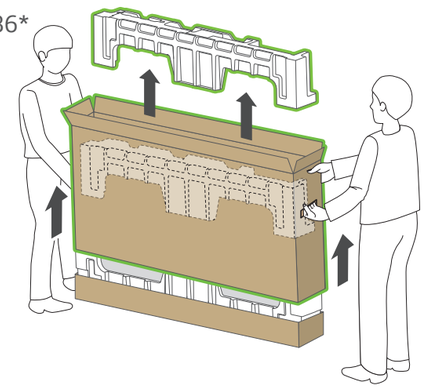

1-B
86QNED86*

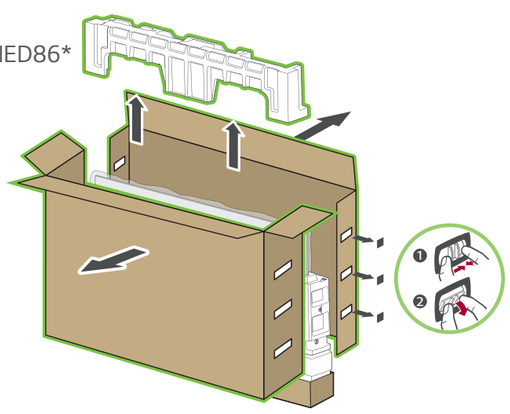

2

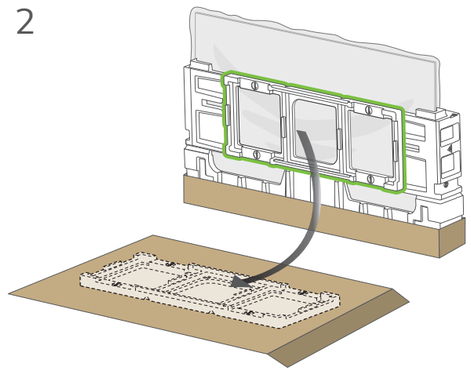

3

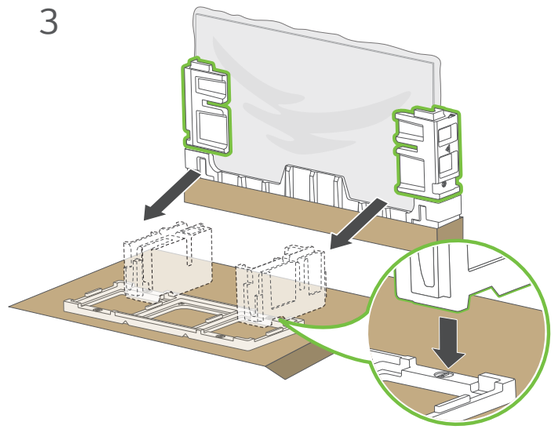

4

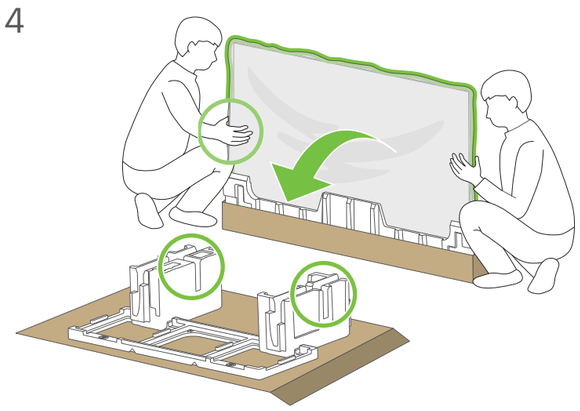

5

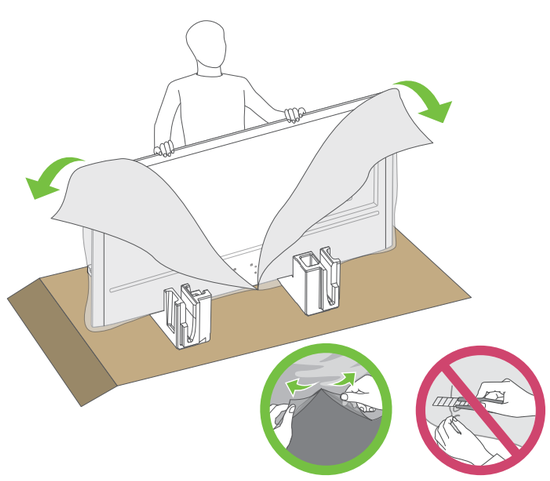

6

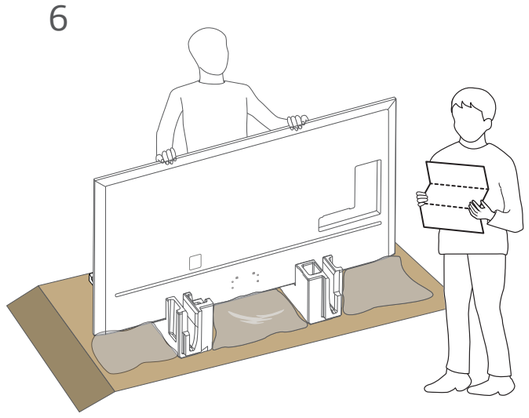

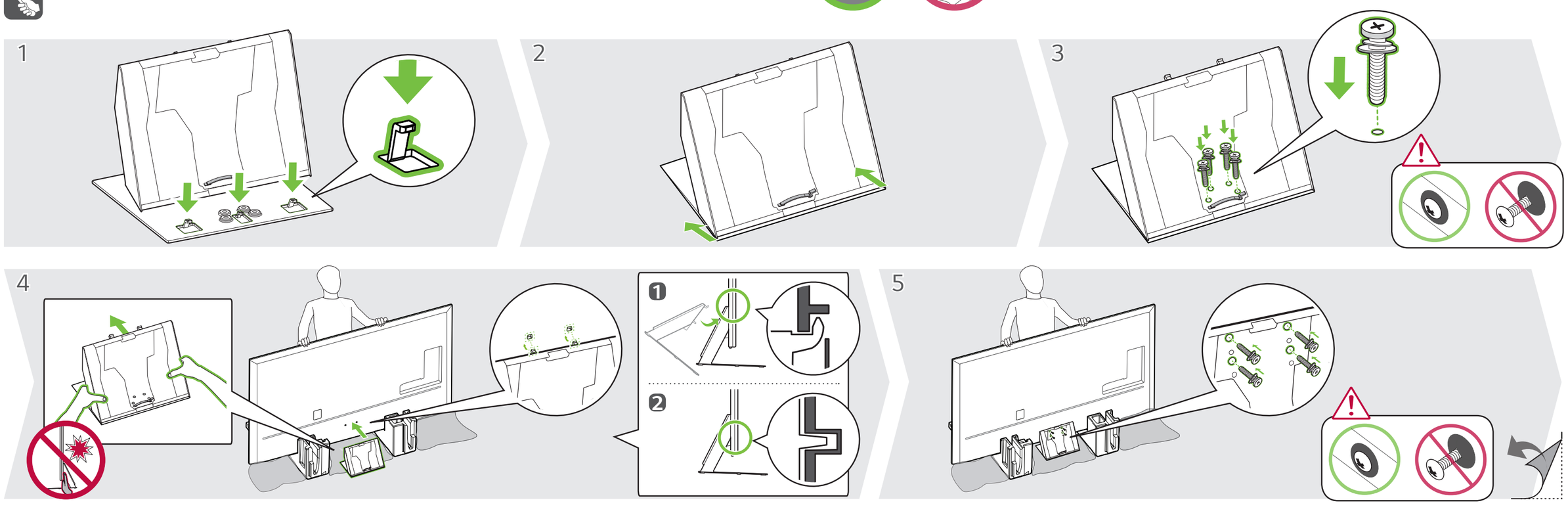

6

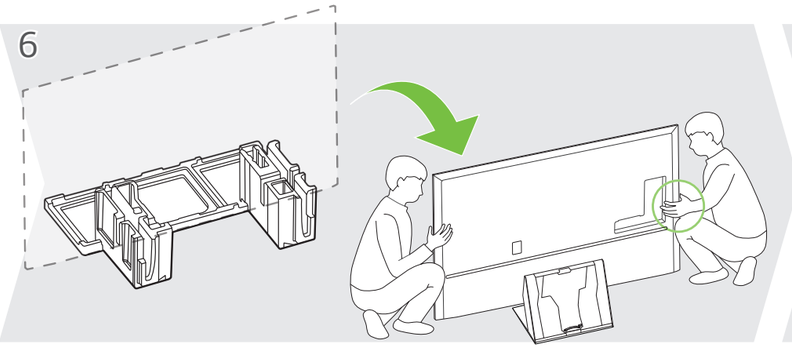

7

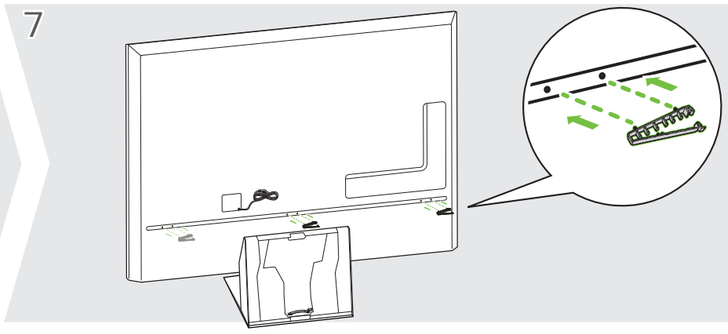

8

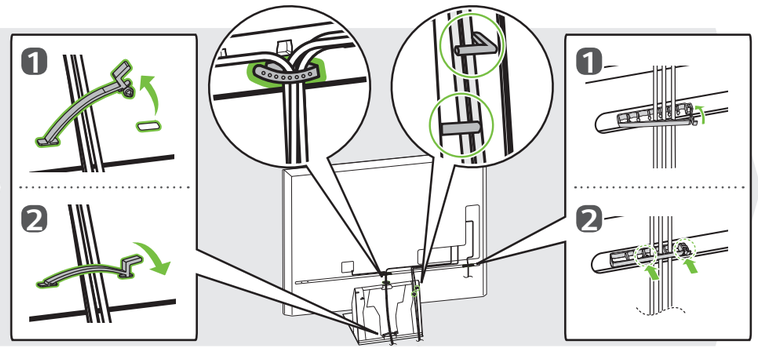

9

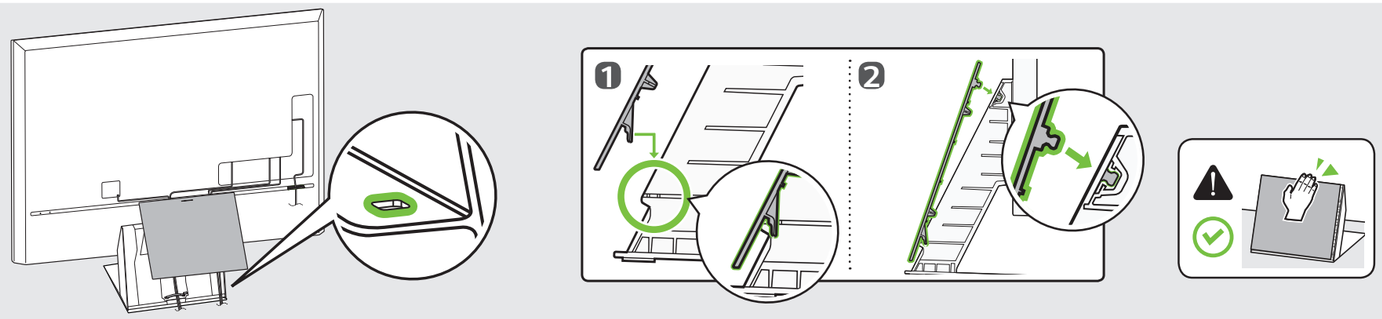

10

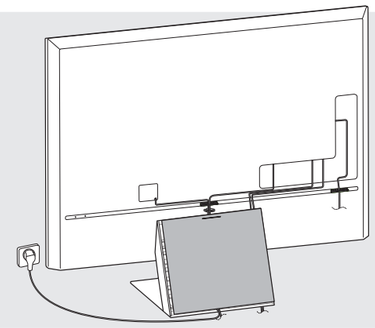

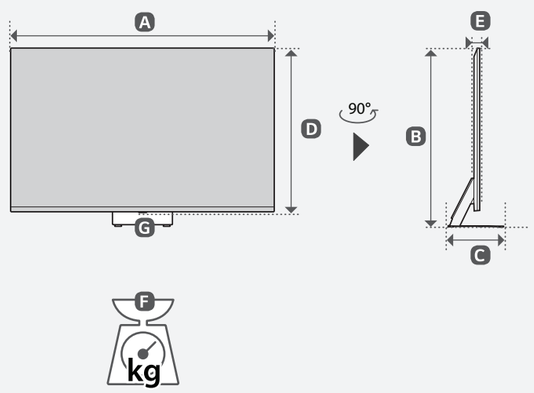

	A	B	C	D	E	F	F - G
	(mm)					(kg)	
75QNED86SRA 75QNED863RE 75QNED866RA 75QNED866RE	1673	1040	370	963	44.9	50.1	41.9
86QNED86SRA 86QNED863RE 86QNED866RE	1925	1174	370	1105	46.1	67.9	59.7

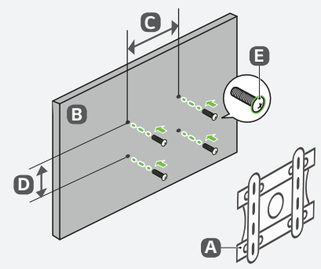

A	B	C × D (mm)	E
LSW430B	75QNED86*	400 x 400	M6
LSW640B	86QNED86*	600 x 400	M8

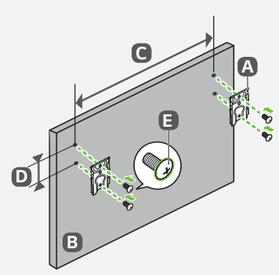
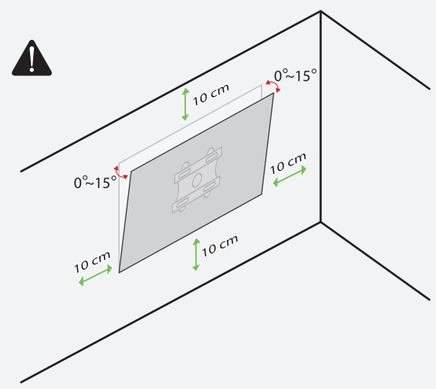
A	B	C × D (mm)	E
WB21LGB	75QNED86*	1281 x 125	M8
WB21LGB	86QNED86*	1586 x 125	M8