LG
Life's Good

LED LCD COMPUTER MONITOR (LED Computer Monitor)

27UN880
27BN88U

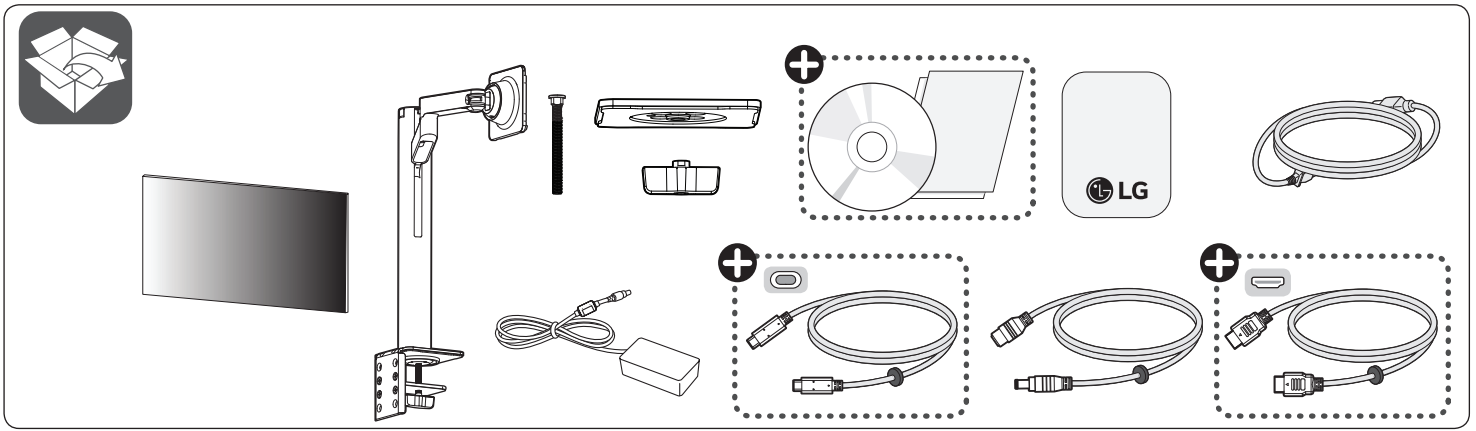

Depending on country

It is recommended that use the supplied components.

www.lg.com

You can download manuals from the LGE website.
OWNER'S MANUAL AND REGULATORY INFO. are available at *https://www.lg.com/au/support/manuals*.
PLEASE READ SAFETY INFORMATION BEFORE INSTALLATION AND USE. SCAN QR CODE TO ACCESS.

MBM65349830
(2401-REV00)

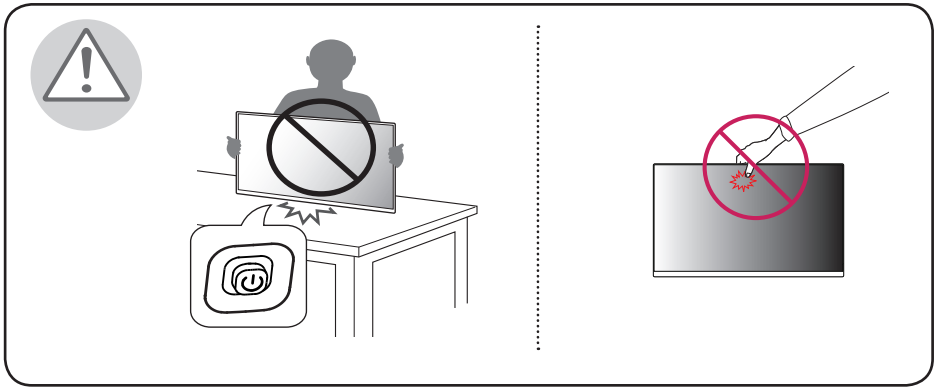

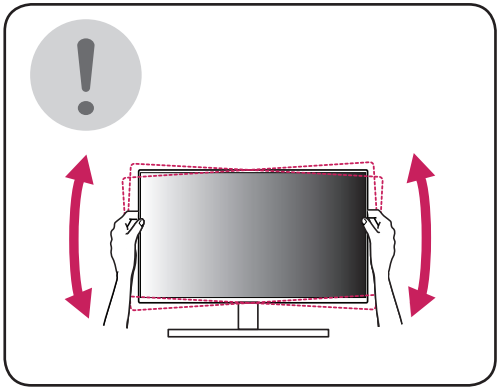

A-Type

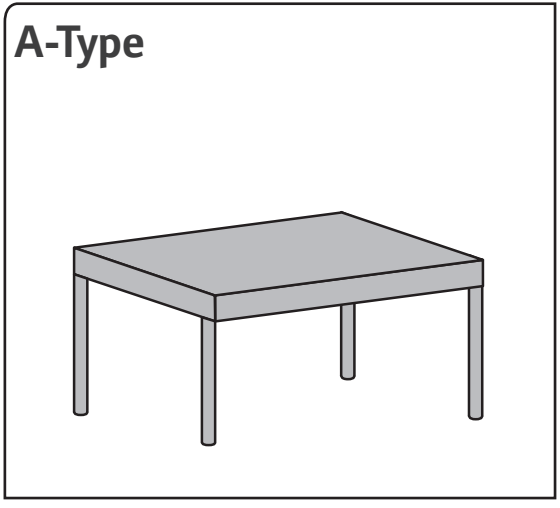

B-Type

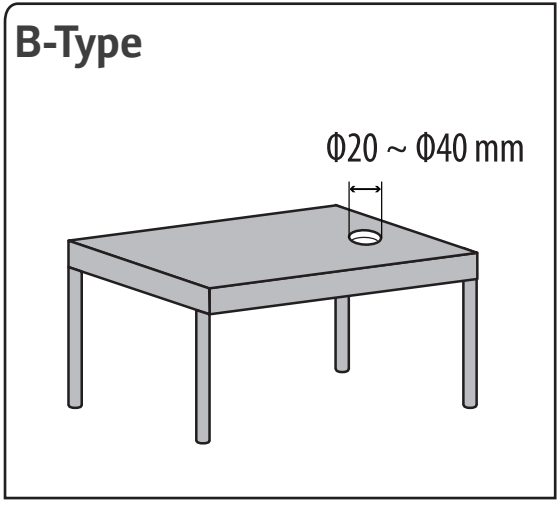

A-Type

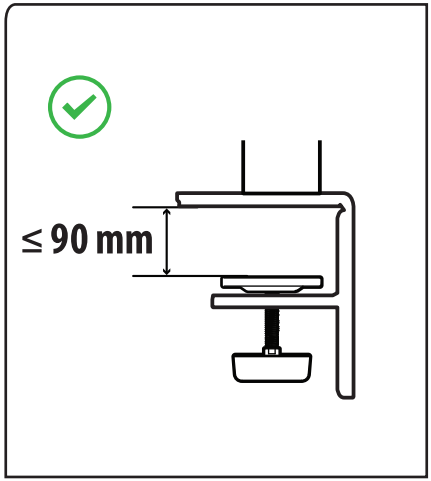

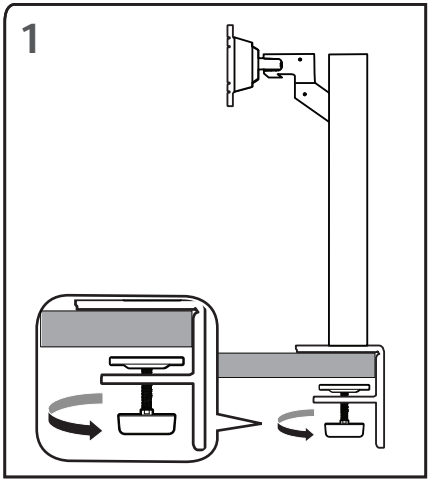

B-Type

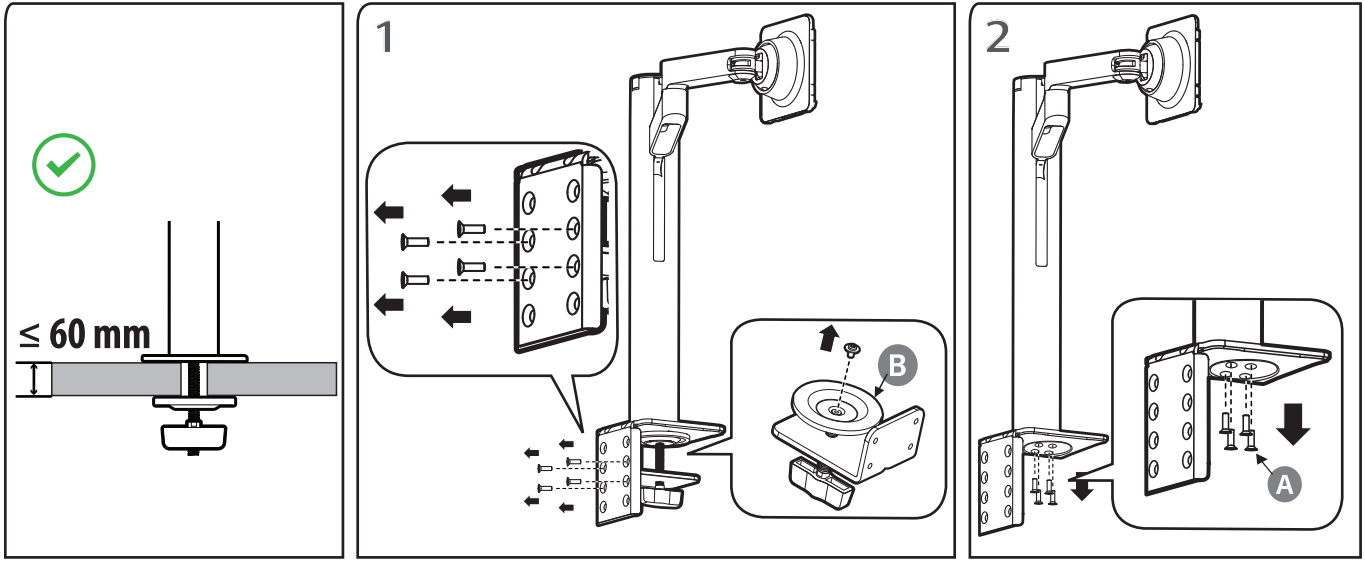

B-Type

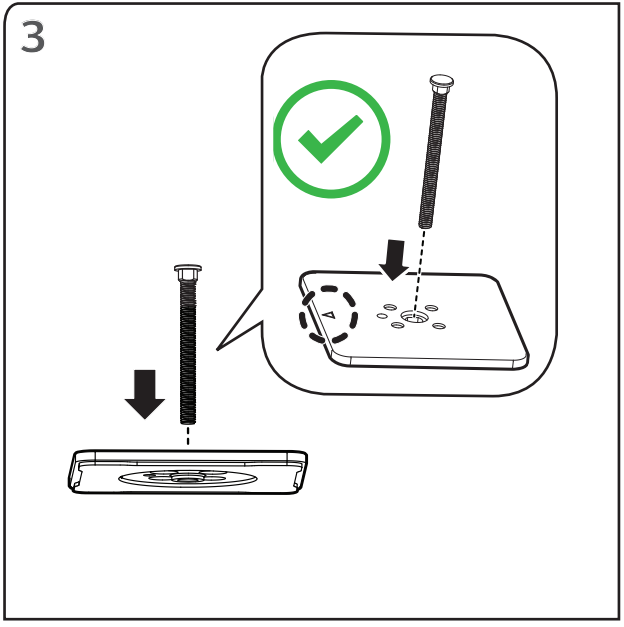

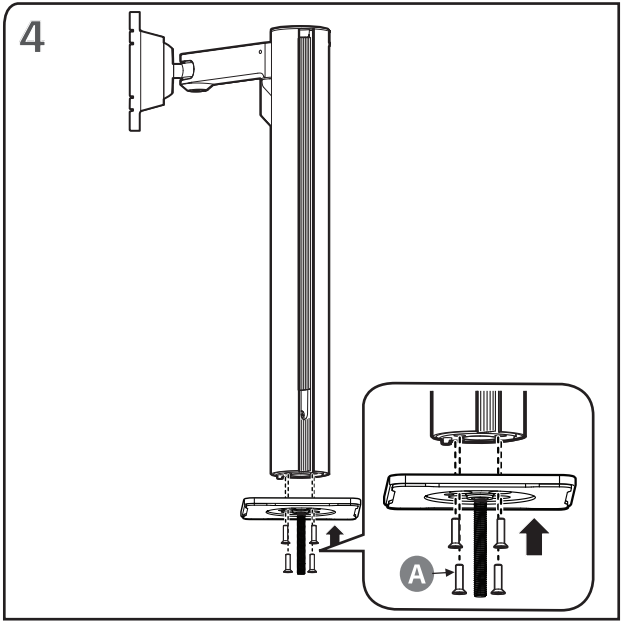

B-Type

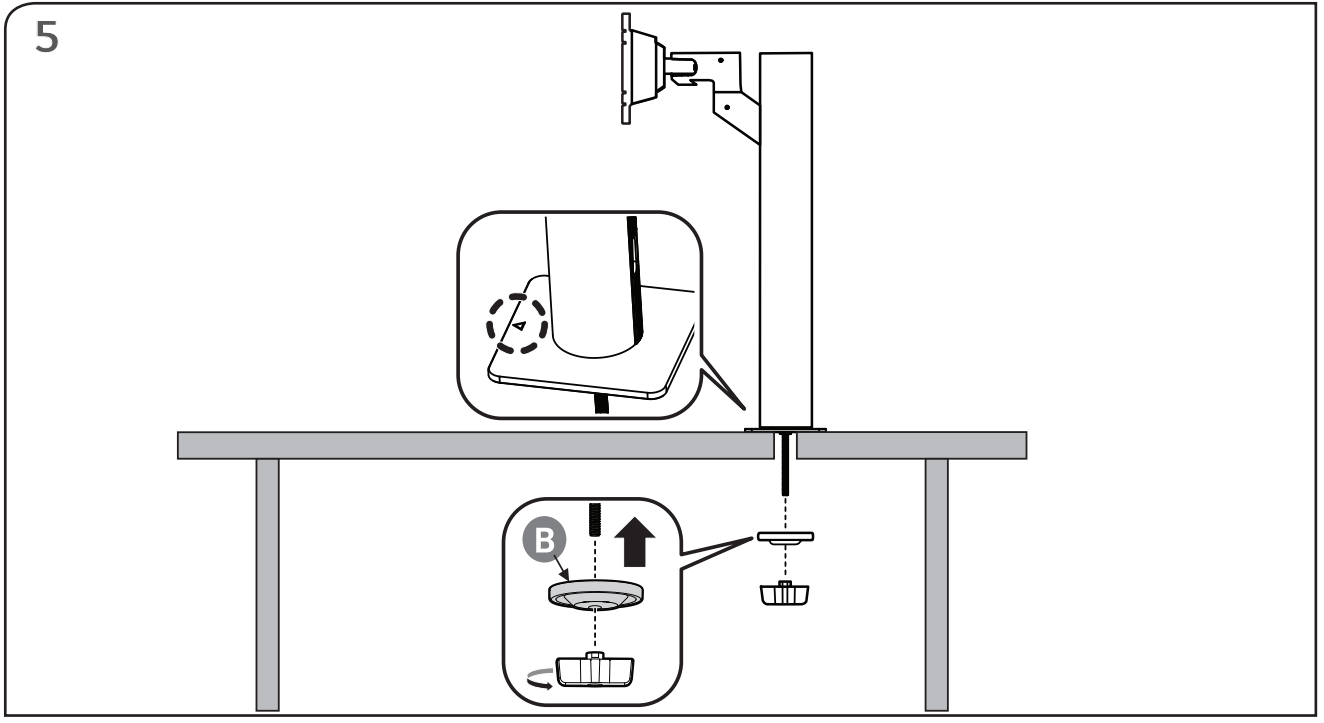



6

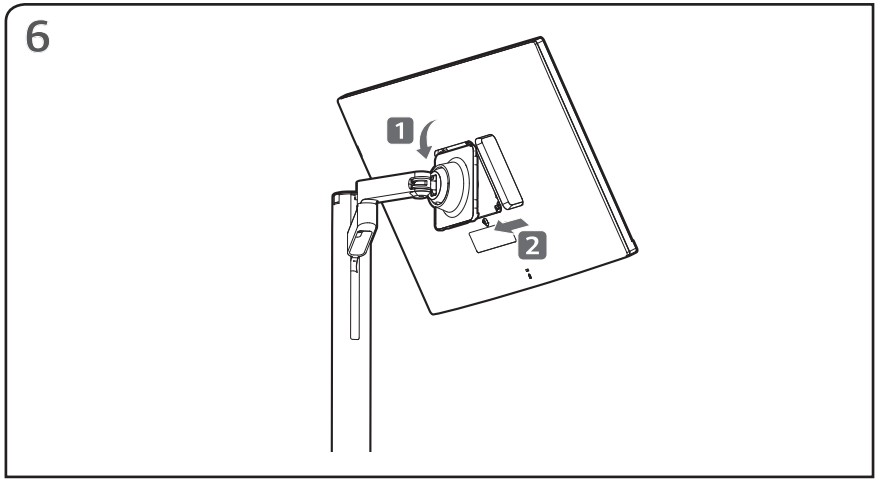

7

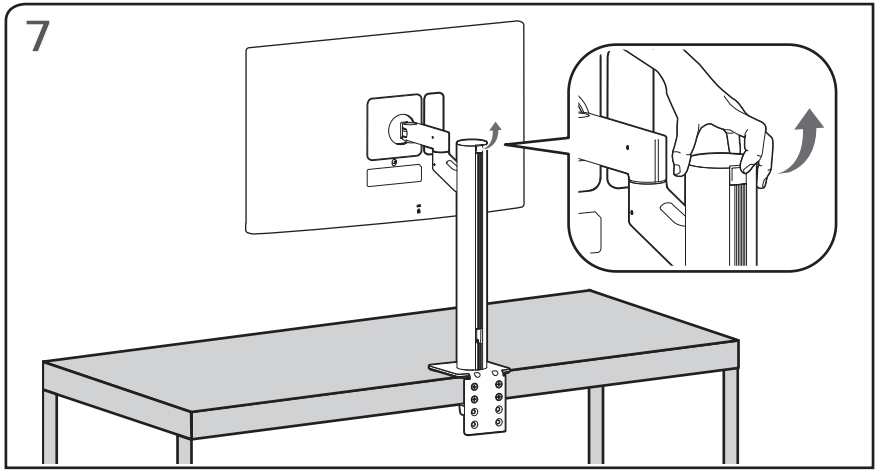



8

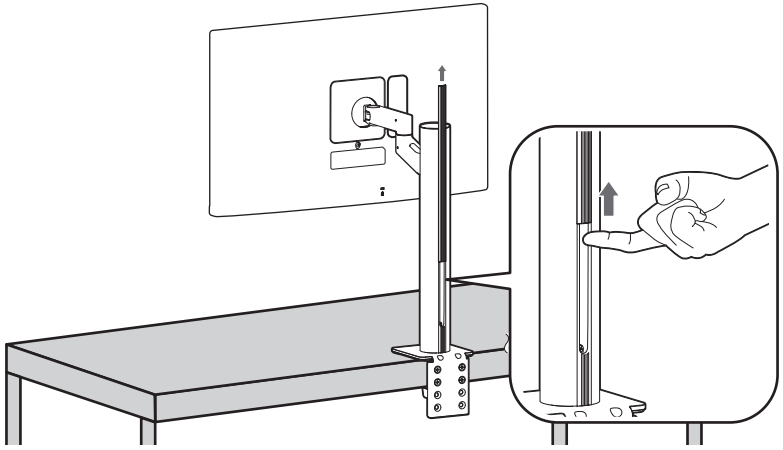

9

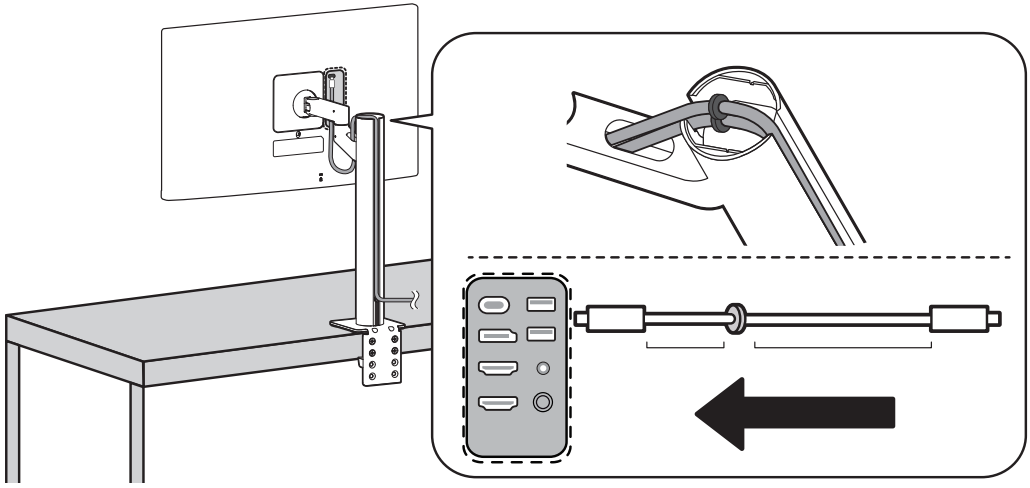

10

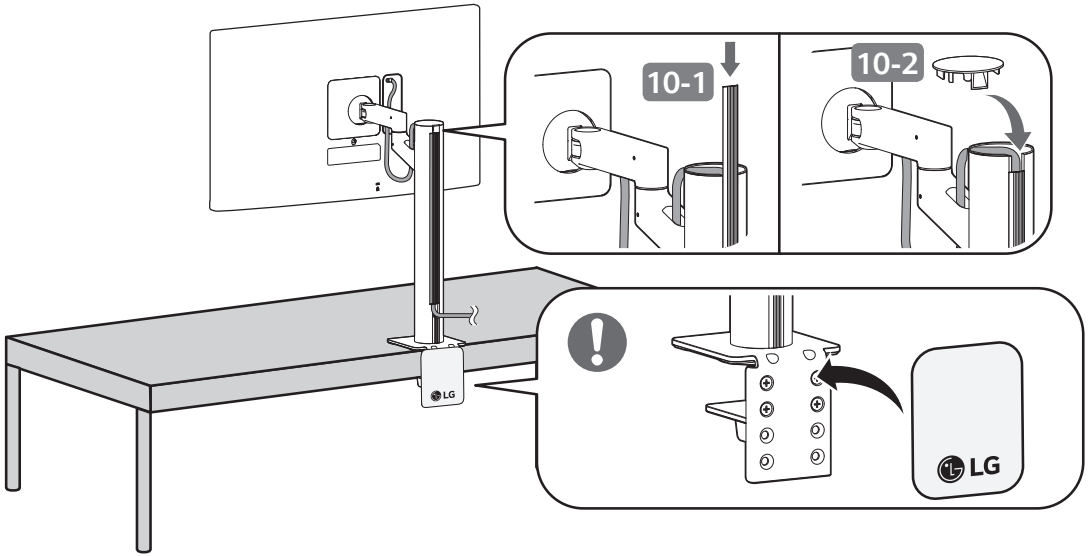

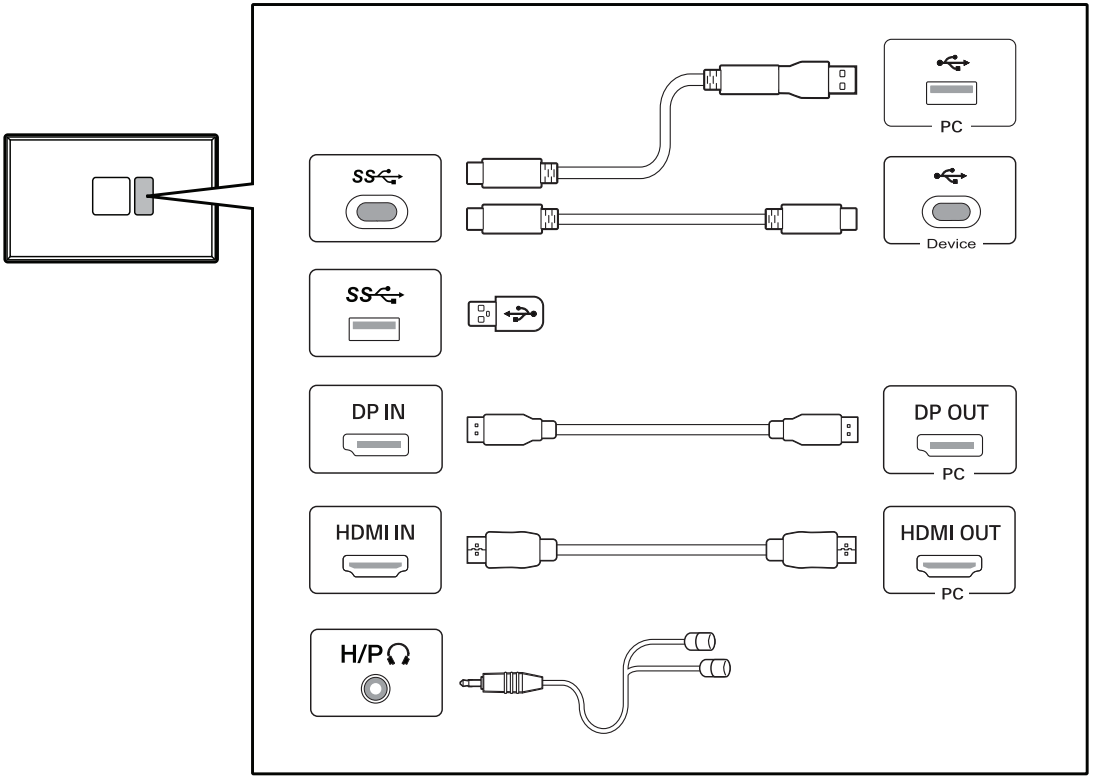

- Using a DVI to HDMI / DP (DisplayPort) to HDMI cable may cause compatibility issues.
- The USB port on the product functions as a USB hub.
- Make sure to use the supplied cable. Otherwise, this may cause the device to malfunction.

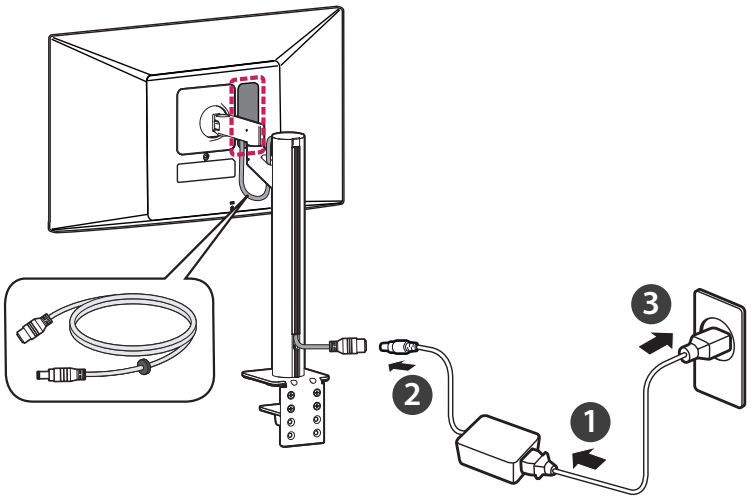
3
2
1

