ENGLISH

INSTALLATION MANUAL

AIR CONDITIONER

Please read this installation manual completely before installing the product.
Installation work must be performed in accordance with the national wiring standards by authorized personnel only.
Please retain this installation manual for future reference after reading it thoroughly.

CEILING CONCEALED DUCT-LOW STATIC

P/NO : MFL65224902

www.lg.com

TIPS FOR SAVING ENERGY

Here are some tips that will help you minimize the power consumption when you use the air conditioner. You can use your air conditioner more efficiently by referring to the instructions below:

- Do not cool excessively indoors. This may be harmful for your health and may consume more electricity.
- Block sunlight with blinds or curtains while you are operating the air conditioner.
- Keep doors or windows closed tightly while you are operating the air conditioner.
- Adjust the direction of the air flow vertically or horizontally to circulate indoor air.
- Speed up the fan to cool or warm indoor air quickly, in a short period of time.
- Open windows regularly for ventilation as the indoor air quality may deteriorate if the air conditioner is used for many hours.
- Clean the air filter once every 2 weeks. Dust and impurities collected in the air filter may block the air flow or weaken the cooling / dehumidifying functions.

For your records

Staple your receipt to this page in case you need it to prove the date of purchase or for warranty purposes. Write the model number and the serial number here:

Model number : _____

Serial number : _____

You can find them on a label on the side of each unit.

Dealer's name : _____

Date of purchase : _____

IMPORTANT SAFETY INSTRUCTIONS

READ ALL INSTRUCTIONS BEFORE USING THE APPLIANCE.

Always comply with the following precautions to avoid dangerous situations and ensure peak performance of your product

WARNING

It can result in serious injury or death when the directions are ignored

CAUTION

It can result in minor injury or product damage when the directions are ignored

WARNING

- Installation or repairs made by unqualified persons can result in hazards to you and others.
- Installation MUST conform with local building codes or, in the absence of local codes, with the Nation Electrical Code NFPA 70/ANSI C1-1003 or current edition and Canadian Electrical Code Part1 CSA C.22.1.
- The information contained in the manual is intended for use by a qualified service technician familiar with safety procedures and equipped with the proper tools and test instruments.
- Failure to carefully read and follow all instructions in this manual can result in equipment malfunction, property damage, personal injury and/or death.

Installation

- Do not use a defective or underrated circuit breaker. Use this appliance on a dedicated circuit.
  - There is risk of fire or electric shock.
- For electrical work, contact the dealer, seller, a qualified electrician, or an Authorized Service Center.
  - Do not disassemble or repair the product. There is risk of fire or electric shock.
- Always ground the product.
  - There is risk of fire or electric shock.
- Install the panel and the cover of control box securely.
  - There is risk of fire or electric shock.
- Always install a dedicated circuit and breaker.
  - Improper wiring or installation may cause fire or electric shock.
- Use the correctly rated breaker or fuse.
  - There is risk of fire or electric shock.
- Do not modify or extend the power cable.
  - There is risk of fire or electric shock.
- Do not let the air conditioner run for a long time when the humidity is very high and a door or a window is left open.
  - Moisture may condense and wet or damage furniture.
- Be cautious when unpacking and installing the product.
  - Sharp edges could cause injury. Be especially careful of the case edges and the fins on the condenser and evaporator.
- For installation, always contact the dealer or an Authorized Service Center.
  - There is risk of fire, electric shock, explosion, or injury.

- Do not install the product on a defective installation stand.
  - It may cause injury, accident, or damage to the product.
- Be sure the installation area does not deteriorate with age.
  - If the base collapses, the air conditioner could fall with it, causing property damage, product failure, and personal injury.
- Do not use the aluminum pipe.
  - It will cause gas leakage.
- Use a vacuum pump or Inert (nitrogen) gas when doing leakage test or air purge. Do not compress air or Oxygen and Do not use Flammable gases. Otherwise, it may cause fire or explosion.
  - There is the risk of death, injury, fire or explosion.

Operation

- Do not store or use flammable gas or combustibles near the product.
  - There is risk of fire or failure of product.

⚠ CAUTION

Installation

- Always check for gas (refrigerant) leakage after installation or repair of product.
  - Low refrigerant levels may cause failure of product.
- Install the drain hose to ensure that water is drained away properly.
  - A bad connection may cause water leakage.
- Keep level even when installing the product.
  - To avoid vibration or water leakage.
- Do not install the product where the noise or hot air from the outdoor unit could damage the neighborhoods.
  - It may cause a problem for your neighbors.
- Use two or more people to lift and transport the product.
  - Avoid personal injury.
- Do not install the product where it will be exposed to sea wind (salt spray) directly.
  - It may cause corrosion on the product. Corrosion, particularly on the condenser and evaporator fins, could cause product malfunction or inefficient operation.

TABLE OF CONTENTS

2 TIPS FOR SAVING ENERGY

3 IMPORTANT SAFETY INSTRUCTIONS

6 INTRODUCTION

6 Features

7 INSTALLATION

7 Selection of the best location

8 Ceiling dimension and hanging bolt location

10 Insulation, others

11 Checking the Drainage

11 Indoor Unit Drain Piping

12 -Drain test

13 Wiring Connection

13 Test running

15 INSTALLATION INSTRUCTIONS

15 Installer Setting - How to enter installer setting mode

15 -Installer Setting Code Table

17 HOW TO SET E.S.P?

19 DIP SWITCH SETTING

INTRODUCTION

Features

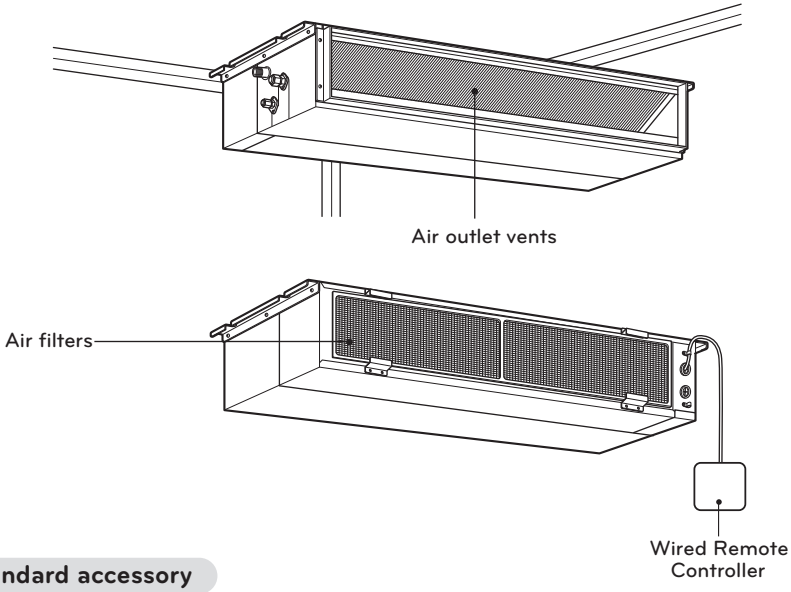

Standard accessory

Name	Quantity	Shape	Other
Clamp metal	2 EA		• Owner's manual • Installation manual
Drain hose	1 EA		
Insulation for fitting	1 set	for gas pipe for liquid pipe	
Washer for hanging bracket	8 EA		
Clamp (Tie Wrap)	4 EA		

INSTALLATION

Selection of the best location

Indoor unit

Install the air conditioner in the location that satisfies the following conditions.

- The place shall easily bear a load exceeding four times the indoor unit's weight.
- The place shall be able to inspect the unit as the figure.
- The place where the unit shall be leveled.
- The place shall easily connect with the outdoor unit.
- The place where the unit is not affected by an electrical noise.
- The place where air circulation in the room will be good .
- There should not be any heat source or steam near the unit

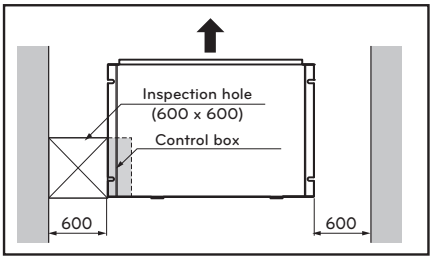

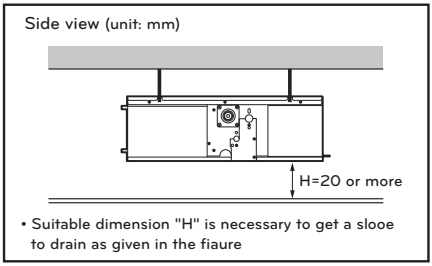

Confirm the positional relationship between the unit and suspension bolts.

- Installation the ceiling opening to clean the filter or service under the product.

(Length: mm)

Capacity(Btu/h)	A	B
9/12k	600	900
18/24k	600	1100

Low static Duct type

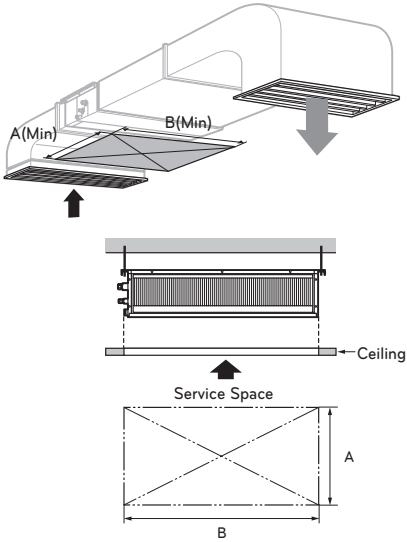

Ceiling dimension and hanging bolt location

Case1

Position of suspension Bolt

- Apply a joint-canvas between the unit and duct to absorb unnecessary vibration.
- Apply a filter Accessory at air return hole.

Dimension / Capacity(Btu/h)	A	B	C	D	E	F	G	H	I	J
9/12k	850	900	383	575	93	190	21	795	163	820
18/24k	1130	1180	383	575	93	190	21	1065	163	1100

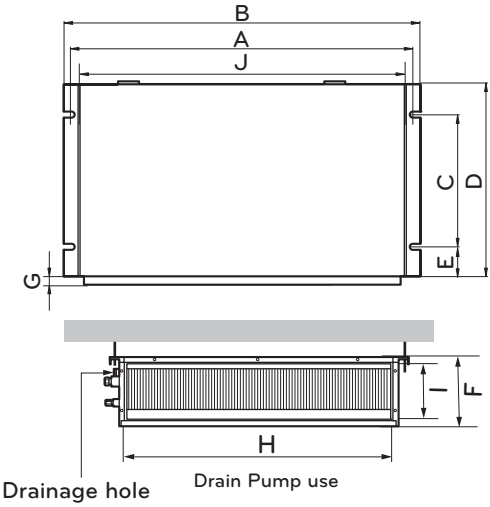

Case2

Position of console Bolt

- A place where the unit will be leveled and that can support the weight of the unit.
- A place where the unit can withstand its vibration.
- A place where service can be easily performed.

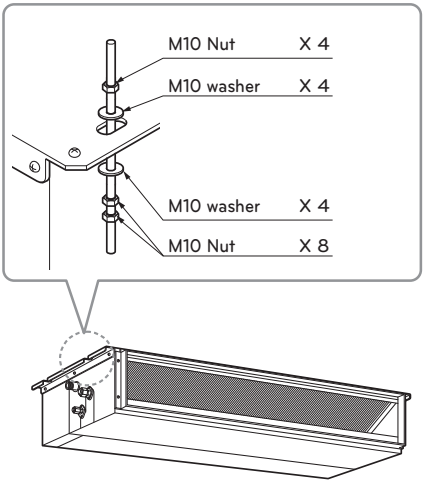

- Insert the set anchor and washer onto the suspension bolts for locking the suspension bolts on the ceiling.
- Mount the suspension bolts to the set anchor firmly.

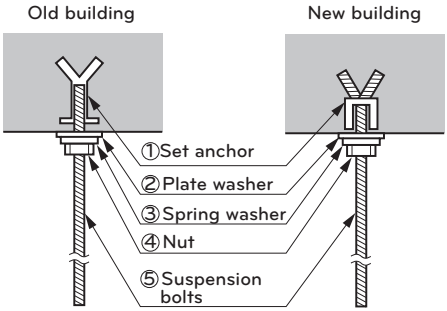

CAUTION

Tighten the nut and bolt to prevent unit falling.

Insulation, others

Insulate the joint and tubes completely.

Thermal insulation

All thermal insulation must comply with local requirement.

INDOOR UNIT

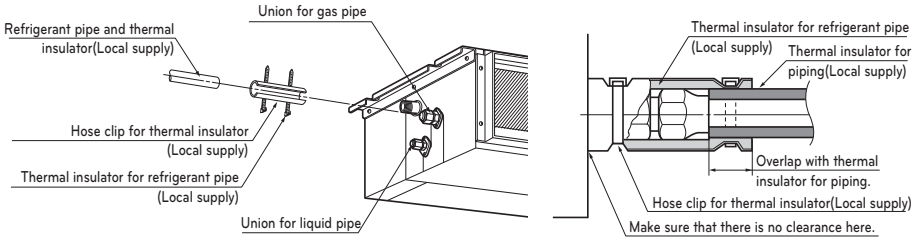

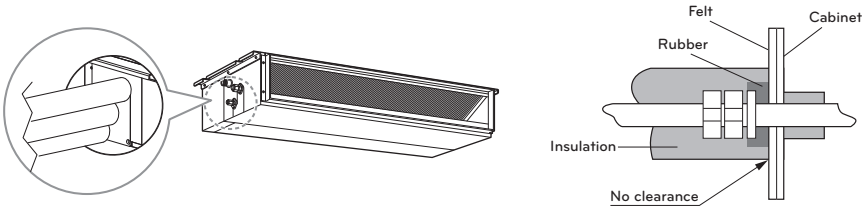

Checking the Drainage

1 Remove the Air Filter.

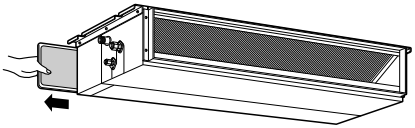

2 Check the drainage.

- Spray one or two glasses of water upon the evaporator.
- Ensure that water flows drain hose of indoor unit without any leakage.

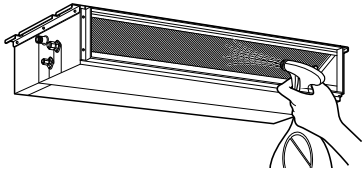

CAUTION

- Install declination of the indoor unit is very important for the drain of the duct type air conditioner.
- Minimum thickness of the insulation for the connecting pipe shall be 19mm.

Front of view

- The unit must be horizontal or declined to the drain hose connected when finished installation.

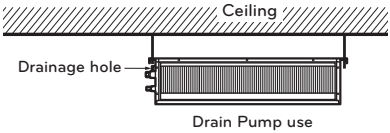

Indoor Unit Drain Piping

- Drain piping must have down-slope (1/50 to 1/100): be sure not to provide up-and-down slope to prevent reversal flow.
- During drain piping connection, be careful not to exert extra force on the drain port on the indoor unit.
- The outside diameter of the drain connection on the indoor unit is 32mm.

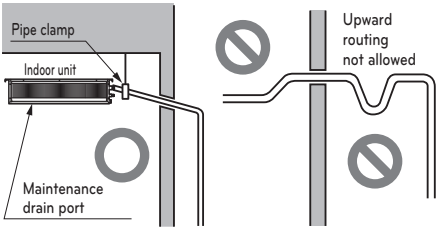

Piping material: Polyvinyl chloride pipe inner diometes Ø 25mm and pipe fittings

- Be sure to install heat insulation on the drain piping.

Heat insulation material: Polyethylene foam with thickness more than 8 mm.

Drain test

The air conditioner uses a drain pump to drain water.

Use the following procedure to test the drain pump operation:

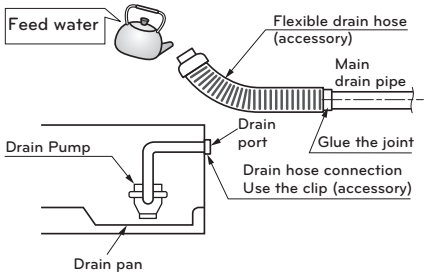

CAUTION

The supplied flexible drain hose should not be strained. A strained hose may cause leakage of water.

- Connect the main drain pipe to the exterior and leave it provisionally until the test comes to an end.
- Feed water to the flexible drain hose and check the piping for leakage.
- Be sure to check the drain pump for normal operation and noise when electrical wiring is complete.
- When the test is complete, connect the flexible drain hose to the drain port on the indoor unit.

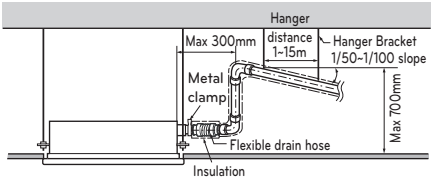

CAUTION

After the confirmation of the above conditions, prepare the wiring as follows:

1. Never fail to have an individual power specialized for the air conditioner. As for the method of wiring, be guided by the circuit diagram posted on the inside of control box cover.
2. Provide a circuit breaker switch between power source and the unit.
3. The screws which fasten the wiring in the casing of electrical fittings are liable to come loose from vibrations to which the unit is subjected during the course of transportation. Check them and make sure that they are all tightly fastened. (If they are loose, it could give rise to burn-out of the wires.)
4. Specification of power source
5. Confirm that electrical capacity is sufficient.
6. Be sure that the starting voltage is maintained at more than 90 percent of the rated voltage marked on the name plate.
7. Confirm that the cable thickness is as specified in the power sources specification. (Particularly note the relation between cable length and thickness.)
8. Never fail to equip a leakage breaker where it is wet or moist.
9. The following troubles would be caused by voltage drop-down.
   - Vibration of a magnetic switch, damage on the contact point, fuse breaking, disturbance by the normal function of an overload protection device.
   - Proper starting power is not given to the compressor.

Wiring Connection

Connect the wires to the terminals on the control board individually according to the outdoor unit connection.

- Ensure that the color of the wires of outdoor unit and the terminal No. are the same as those of indoor unit respectively.

Terminal Block of Indoor Unit			
1(L)	2(N)	⏚	3

Connected to outdooor unit

Precautions when laying power wiring

- Use round pressure terminals for connections to the power terminal block.

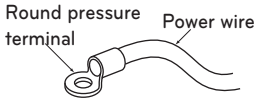

When none are available, follow the instructions below.

- Do not connect wiring of different thicknesses to the power terminal block. (Slack in the power wiring may cause abnormal heat.)
- When connecting wiring which is the same thickness, do as shown in the figure below.

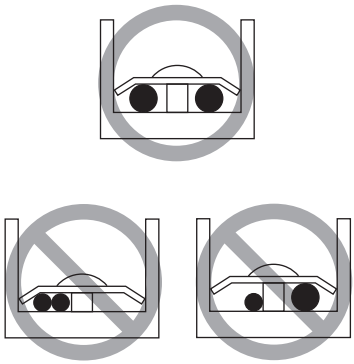

WARNING

Make sure that the screws of the terminal are free from looseness.

Test running

Precautions in test run

- The initial power supply must provide at least 90% of the rated voltage.
  Otherwise, the air conditioner should not be operated.

CAUTION

- For test run, carry out the cooling operation firstly even during heating season. If heating operation is carried out firstly, it leads to the trouble of compressor. Then attention must be paid.
- Test run will be cancelled 18 minutes later automatically.

Test run mode by remote controller

1 If pressing ⚙ button long for 3 seconds, it enters into remote controller setter setup mode.
   - If pressing once shortly, it enters into user setup mode. Please press more than 3 seconds for sure.
   - Please cancel the right and left of wind direction for RAC product.

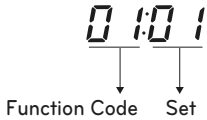

2 Setup figure '01' blinks at the lower part of indication window.

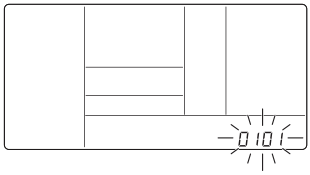

3 Press OK/CLEAR button to start.

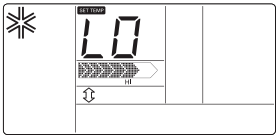

4 During the test run, pressing the below button will exit the test run.
- Select operation, temperature up/down, wind flow control, wind direction, start/stop button.

Connection of power supply

- Connect the power supply cord to the independent power supply.
  Circuit breaker is required.

Evaluation of the performance

- Measure the pressure of the gas side service valve.
- Measure the air temperature from inlet and outlet of air conditiioner.
- Ensure the difference between the inlet and outlet temperature is more than 8°C.
- For reference; the gas side pressure at optimum condition is shown on table (cooling).

Refrigerant	Outside ambient TEMP.	The pressure of the gas side service valve
R22	35°C(95°F)	4~5 kg/cm^{2}G (56.8~71.0 P.S.I.G.)
R410A	35°C(95°F)	8.5~9.5 kg/cm^{2}G (120~135 P.S.I.G.)

NOTE

- If the actual pressure is higher than shown, the system is most likely overcharged, and charge should be removed. If the actual pressure are lower than shown, the system is most likely undercharged, and charge should be added.

INSTALLATION INSTRUCTIONS

Installer Setting - How to enter installer setting mode

CAUTION

Installer setting mode is to set the detail function of the remote controller.
If the installer setting mode is not set correctly, it can cause problems to the product, user injury or property damage. This must be set by an certificated installer, and any installation or change that is carried out by a non-certificated person should be responsible for the results. In this case, free service cannot be provided.

1 If pressing button long for 3 seconds, it enters into remote controller setter setup mode.
- If pressing once shortly, it enters into user setup mode. Please press more than 3 seconds for sure.

2 When you enter the setting mode initially, function code is displayed on the bottom of the LCD screen.

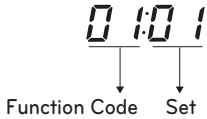

NOTE

- Some categories of the menu may not be displayed according to the function of the product, or the menu name may be different.

Installer Setting Code Table

General air-conditioner product

No.	Function	Code	Value
1	Test Run	01	01:Set
2	Address Setting	02	00~FF : Address
3	E.S.P. Valu e	03	<ESP Step> 01:VeryLow 02:Low 03:Med 04:High 05:Very High <ESP Value> 0 ~ 255 <Example> 03:01 00 (Function Code, ESP step, ESP value)
4	Thermistor	04	01:Remo 02:Indoor 03:2TH
5	Ceiling Height	05	01:Med 02:Low 03:High 04:Very High

6	Static Pressure	06	01:V-H 02:F-H 03:V-L 04:F-L
7	Master Setting	07	00:Slave 01:Master
8	Override Setting	08	00:Slave 01:Master
9	Dry Contact	09	00:Auto-Off 01:Auto-On
10	Release 3 Min. Delay	10	01:Set
11	Zone State	11	01:Variable 02:Fixed
12	Celsius Fahrenheit Switching	12	00:Celsius 01:Fahrenheit (Optimized only for U.S.A)
13	Zone Type	13	00:Zone Controller 01:Damper Controller
14	Zone Number	14	02~04(Zone number)
15	Plasma	20	00: Not Installed 01: Installed
16	Electric heater	21	
17	Humidifier	22	
18	Elevation Grill	23	
19	Ventilation Kit	24	

NOTE

- Some contents may not be displayed depending on the product function
- Please refer to the wired remote controller accessory manual for more details

HOW TO SET E.S.P?

What is an E.S.P function?

This is the function that decides the strength of the wind for each wind level and because this function is to make the installation easier, please do not use this function when using the remote controller.

CAUTION

- If you set ESP incorrectly, the air conditioner may malfunction. This setting must be carried out by a certificated-technician.
  This function is using for only duct product.

1 If pressing button long for 3 seconds, it enters into remote controller setter setup mode.
   - If pressing once shortly, it enters into user setup mode. Please press more than 3 seconds for sure.

2 If entering into ESP setup mode by using button, it indicates as the picture below.

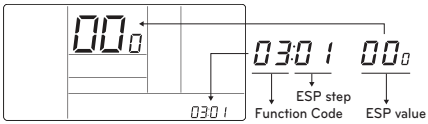

3 Select ESP fan step by pressing button. (01: very low, 02: low, 03: medium, 04: high, 05: power)

4 Move to ESP value setting by pressing button. (It is 000 when delivering from the factory.)

5 Press button to setup ESP value. (It is possible to setup ESP value from 1 to 255, and 1 is the smallest and 255 is the biggest.)

6 Select ESP fan step again by using button and setup ESP value, as No. 4 and 5, that corresponds each wind flow.

7 Press button to save.

8 Press button to exit.
   * After setup, it automatically gets out of setup mode if there is no button input for 25 seconds.
   * When exiting without pressing set button, the manipulated value is not reflected.

NOTE

- When setting ESP value on the product without very weak wind or power wind function, it may not work.
- Please be careful not to change the ESP value for each fan step.
- ESP value is available for specific range belongs to the product.

Table 1

Static Pressure (mmAq/ Pa)			0 / 0	1 / 10	2 / 20	3 / 30	4 / 40
Model(Btu/h)	Step	CMM/ CFM (l/s)	Setting Value				
9k	High	8.5 / 300 (142)	75	84	94	104	114
	Med	7.5 / 265 (125)	69	77	88	99	110
	Low	6.5 / 230 (108)	62	71	83	95	106
12k	High	9.5 / 336 (158)	82	90	99	109	118
	Med	8.5 / 300 (142)	75	84	94	104	114
	Low	7.5 / 265 (125)	69	77	88	99	110
18k	High	15.0 / 530 (250)	90	97	105	114	122
	Med	13.5 / 477 (255)	82	90	99	109	119
	Low	11.5 / 406 (192)	75	84	93	103	114
24k	High	17.0 / 600 (283)	110	117	125	129	-
	Med	15.0 / 530 (250)	100	107	115	121	127
	Low	13.5 / 477 (225)	90	97	105	114	122

NOTE

- Be sure to set the value refering table 1. Unexpected set value will cause mal-function.
- Table 1 is based at 230V. According to the fluctuation of voltage, air flow rate varies.

DIP SWITCH SETTING

Dip Switch Setting of Indoor unit PCB

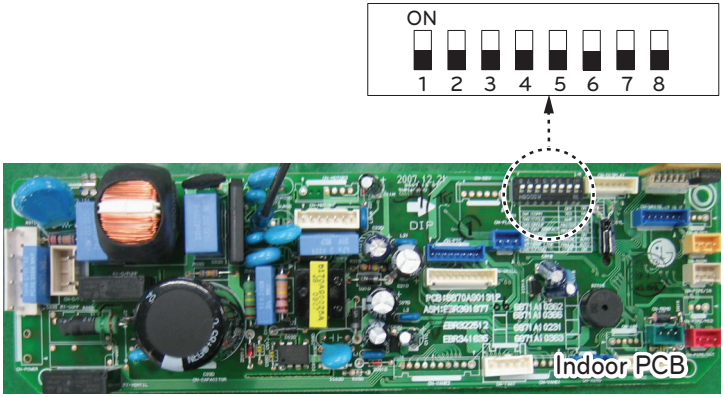

	Function	Description	Setting Off	Setting On	Default
SW3	Group Control	Selection of Master or Slave	Master	Slave	Off
SW4	Dry Contact Mode	Selection of Dry Contact Mode	Wired/Wireless remote controller Selection of Manual or Auto operation Mode	Auto	Off

NOTE

- Please refer to the wired remote controller accessory manual for more details about ‘Group Control’ & ‘Dry Contact Mode’.

LG

Life's Good