global_main.book.book Page 1 Wednesday, June 4, 2025 12:58 PM

Scan the QR code to see the manual.

OWNER'S MANUAL

# FRIDGE & FREEZER

Before beginning installation, read these instructions carefully. This will simplify installation and ensure that the product is installed correctly and safely. Leave these instructions near the product after installation for future reference.

**ENGLISH**

MFL71664438
Rev.00_060425

www.lg.com

Copyright © 2025 LG Electronics. All Rights Reserved

# TABLE OF CONTENTS

This manual may contain images or content that may be different from the model you purchased.

This manual is subject to revision by the manufacturer.


## SAFETY INSTRUCTIONS

READ ALL INSTRUCTIONS BEFORE USE ..... 3
WARNING ..... 3
CAUTION ..... 9

## INSTALLATION

Before Installation ..... 11
Levelling the Appliance ..... 11
Turning on the Power ..... 12
Moving the Appliance for Relocation ..... 12

## OPERATION

Before Use ..... 14
Product Features ..... 17
Control Panel ..... 19
Icemaker ..... 22
Fridge Drawer ..... 23
Door Basket ..... 24
Shelf ..... 24

## SMART FUNCTIONS

LG ThinQ Application ..... 25
Smart Diagnosis ..... 26

## MAINTENANCE

Cleaning ..... 28
Deodorizer ..... 28

## TROUBLESHOOTING

Before Calling for Service ..... 30

global_main.book.book Page 3 Wednesday, June 4, 2025 12:58 PM





# SAFETY INSTRUCTIONS

## READ ALL INSTRUCTIONS BEFORE USE

The following safety guidelines are intended to prevent unforeseen risks or damage from unsafe or incorrect operation of the appliance. The guidelines are separated into 'WARNING' and 'CAUTION' as described below.

### Safety Messages

| | |
|---|---|
| ⚠ | This symbol is displayed to indicate matters and operations that can cause risk. Read the part with this symbol carefully and follow the instructions in order to avoid risk. |
| ⚠ | **WARNING**<br><br>This indicates that the failure to follow the instructions can cause serious injury or death. |
| ⚠ | **CAUTION**<br><br>This indicates that the failure to follow the instructions can cause the minor injury or damage to the product. |

## WARNING

### ⚠ WARNING

- To reduce the risk of explosion, fire, death, electric shock, injury or scalding to persons when using this product, follow basic precautions, including the following:

### Technical Safety

- This appliance is not intended for use by persons (including children) with reduced physical, sensory or mental capabilities, or lack of experience and knowledge, unless they have been given supervision or instruction concerning use of the appliance by a person

global_main.book.book Page 4 Wednesday, June 4, 2025 12:58 PM



responsible for their safety. Children should be supervised to ensure that they do not play with the appliance.

- This appliance is intended to be used in household and similar applications such as:
  - staff kitchen areas in shops, offices and other working environments;
  - farm houses and by clients in hotels, motels and other residential type environments;
  - bed and breakfast type environments;
  - catering and similar non-retail applications.
- This appliance is not for use in portable or mobile installations, such as marine or RV uses, where it will be in motion while operating.

This symbol alerts you to flammable materials that can ignite and cause a fire if you do not take care.

- This appliance contains a small amount of isobutane refrigerant (R600a), but it is also combustible. When transporting and installing the appliance, care should be taken to ensure that no parts of the refrigerating circuit are damaged.
- The refrigerant and insulation blowing gas used in the appliance require special disposal procedures. Consult with service agent or a similarly qualified person before disposing of them.
- Do not damage the refrigerant circuit.
- If the power cord is damaged or the hole of the outlet socket is loose, it must be replaced. Do not use the power cord and contact an authorized service centre in order to avoid a hazard.
- Do not locate multiple portable socket-outlets or portable power supplies at the rear of the appliance.
- Securely plug the power plug in the outlet socket after completely removing any moisture and dust.
- Never unplug the appliance from the power supply by pulling on the power cable. Always grip the power plug firmly and pull straight out from the outlet socket.

global_main.book.book Page 5 Wednesday, June 4, 2025 12:58 PM





- Keep ventilation openings, in the appliance enclosure or in the built-in structure, clear of obstruction.
- Do not store explosive substances such as aerosol cans with a flammable propellant in this appliance.
- Do not tilt the appliance to pull or push it when transporting.
- When positioning the appliance, ensure the supply cord is not trapped or damaged.
- Do not use mechanical devices or other means to accelerate the defrosting process.
- Do not use a hair drier to dry the inside of the appliance or place a candle inside to remove the odours.
- Do not use electrical appliances inside the food storage compartments of the appliance, unless they are of the type recommended by the manufacturer.
- Make sure not to get a body part such as a hand or foot stuck while moving the appliance.
- Disconnect the power cord before cleaning the appliance interior or exterior.
- Do not spray water or inflammable substances (toothpaste, alcohol, thinner, benzene, flammable liquid, abrasive, etc.) over the interior or exterior of the appliance to clean it.
- Do not clean the appliance with brushes, cloths or sponges with rough surfaces or which are made of metallic material.
- Only qualified service personnel from LG Electronics service centre should disassemble or repair the appliance.

## Risk of Fire and Flammable Materials

- If a leak is detected, avoid any naked flames or potential sources of ignition and air the room in which the appliance is standing for several minutes. In order to avoid the creation of a flammable gas air mixture if a leak in the refrigerating circuit occurs, the size of the room in which the appliance is used should correspond to the amount of refrigerant used. The room must be 1 $m^2$ in size for every 8 g of R600a refrigerant inside the appliance.

global_main.book.book Page 6 Wednesday, June 4, 2025 12:58 PM



- Refrigerant leaking out of the pipes could ignite or cause an explosion.
- The amount of refrigerant in your particular appliance is shown on the identification plate inside the appliance.

## Installation

- This appliance should only be transported by two or more people holding the appliance securely.
- Install the appliance on a firm and level floor.
- Do not install the appliance in a damp and dusty place. Do not install or store the appliance in any outdoor area, or any area that is subject to weathering conditions such as direct sunlight, wind, rain, or temperatures below freezing.
- Do not place the appliance in direct sunlight or expose it to the heat from heating appliances such as stoves or heaters.
- Be careful not to expose the rear of the appliance when installing.
- Install the appliance in a place where it is easy to unplug the power plug of the appliance.
- Be careful not to let the appliance door fall during assembly or disassembly.
- Be careful not to pinch, crush, or damage the power cable during assembly or disassembly of the appliance door.
- Be careful not to point the power plug up or let the appliance lean against the power plug.
- Do not modify or extend the power cable.
- Ensure that the outlet socket is properly grounded, and that the earth pin on the power cord is not damaged or removed from the power plug. For more details on grounding, inquire at an LG Electronics customer information centre.
- This appliance is equipped with a power cord having an equipment-grounding conductor and a grounding power plug. The power plug must be plugged into an appropriate outlet socket that is installed and grounded in accordance with all local codes and ordinances.

global_main.book.book Page 7 Wednesday, June 4, 2025 12:58 PM





- Never start up an appliance showing any signs of damage. If in doubt, consult your dealer.
- Dispose of all packaging materials (such as plastic bags and styrofoam) away from children. The packaging materials can cause suffocation.
- Do not plug the appliance into a multi socket adapter which does not have a power cable (mounted).
- The appliance should be connected to a dedicated power line which is separately fused.
- Do not use a multi-socket outlet which is not properly grounded (portable). It must comply with the technical specifications of the appliance and may only be used for the appliance.

## Operation

- Do not use the appliance for any purpose (storage of medical or experimental materials or shipping) other than any domestic household food storage use.
- If water penetrates electrical parts of the appliance, disconnect power plug and contact an LG Electronics customer information centre.
- Unplug the power plug during a severe thunderstorm or lightening or when not in use for a long period of time.
- Do not touch the power plug or the appliance controls with wet hands.
- Do not bend the power cable excessively or place a heavy object on it.
- Immediately unplug the power plug and contact an LG Electronics customer information centre if you detect a strange sound, odour, or smoke coming from the appliance.
- Do not place hands or metallic objects inside the area emitting the cold air, cover or heat releasing grille on the back.
- Do not apply excessive force or impact to the back cover of the appliance.
- Be careful of nearby children when you open or close the appliance door. The door may bump the child and cause injury.

global_main.book.book Page 8 Wednesday, June 4, 2025 12:58 PM



- Avoid the danger of children getting trapped inside the appliance. A child trapped inside the appliance can cause suffocation.
- Do not put animals, such as pets into the appliance.
- Do not place heavy or fragile objects, containers filled with liquid, combustible substances, flammable objects (such as candles, lamps, etc.), or heating devices (such as stoves, heaters, etc.) on the appliance.
- Do not place any electronic appliance (such as heater and mobile phone) inside the appliance.
- If there is a gas leakage (isobutane, propane, natural gas, etc.), do not touch the appliance or power plug and ventilate the area immediately. This appliance uses a refrigerant gas (isobutane, R600a). Although it uses a small amount of the gas, it is still combustible gas. Gas leakage during appliance transport, installation or operation can cause fire, explosion or injury if sparks are caused.
- Do not use or store flammable or combustible substances (ether, benzene, alcohol, chemical, LPG, combustible spray, insecticide, air freshener, cosmetics, etc.) near the appliance.
- This appliance incorporates an earth connection for functional purposes.
- Connect to potable water supply only.
  - If connected to a water supply, connect to a potable water supply only.
- Fill with potable water only.
  - If using an icemaker or dispenser water tank, make sure to fill it with potable water only.

## Disposal

- When discarding the appliance, remove the door gasket while leaving the shelves and baskets in place and keep children away from the appliance.

global_main.book.book Page 9 Wednesday, June 4, 2025 12:58 PM





# CAUTION

## ⚠ CAUTION

- To reduce the risk of minor injury to persons, malfunction, or damage to the product or property when using this product, follow basic precautions, including the following:

### Installation

- After unpacking, check the appliance for any damage that may have occurred during transit.
- Wait for at least 3 to 4 hours in order to ensure the refrigerant circuit is fully efficient.
- Move the appliance carefully on sensitive floors to avoid damage to the floor.

### Operation

- Do not touch frozen food or the metal parts in the freezer compartment with wet or damp hands. It may cause frostbite.
- Do not place glass containers, bottles or cans (especially those containing carbonated drinks) in the freezer compartment, shelves or ice bucket that will be exposed to temperatures below freezing. Contents may expand when frozen, break the container and cause injury.
- The tempered glass on the front side of the appliance door or the shelves can be damaged by an impact. If it is broken, do not touch it with hands.
- Do not hang from the appliance doors, storage room, shelf or climb up into it.
- Do not store an excessive amount of water bottles or containers for side dishes on the door baskets.
- Do not open or close the appliance door with excessive force.
- If the hinge of the appliance door is damaged or operates improperly, stop using the appliance and contact an authorized service centre.

global_main.book.book Page 10 Wednesday, June 4, 2025 12:58 PM



- Prevent animals from nibbling on the power cable or water hose.
- Never eat frozen foods immediately after they have been taken out in the freezer compartment. There is a risk of freezing or the formation of frost blisters. FIRST AID: Immediately hold it under cold running water. Do not pull it away.
- Make sure not to get a hand or foot stuck upon opening or closing the appliance door or door in door.

## Maintenance

- This appliance is equipped with maintenance-free LED interior light. Do not remove cover or LED lamp in any attempt to repair or change it. Contact an LG Electronics customer information centre.
- Do not clean glass shelves or covers with warm water when they are cold. They may shatter if exposed to sudden temperature changes.
- Do not insert the shelves upside down. The shelves may fall.
- If ice forms in the freezer compartment, please contact LG Electronics customer service. Do not use sharp-edged objects to remove any frost or ice build-up. Do not use sprays, electric heating devices such as fan heaters, hair dryers, steam cleaners or other heat sources for defrosting. Plastic parts could deform.
- Dispose of the ice inside the ice bucket in the freezer compartment during an extended power outage.

global_main.book.book Page 11 Wednesday, June 4, 2025 12:58 PM





# INSTALLATION

## Before Installation

### Ambient Temperature

- The appliance is designed to operate within a limited range of ambient temperatures, depending on the climate zone.
- The internal temperatures could be affected by the location of the appliance, the ambient temperature, the frequency of door opening and so on.
- The climate class can be found on the rating label.

| Climate Class | Ambient Temperature Range ºC |
|---|---|
| SN (Extended Temperate) | +10 - +32 |
| N (Temperate) | +16 - +32 |
| ST (Subtropical) | +16 - +38 / +18 - +38** |
| T (Tropical) | +10 - +43* / +16 - +43 / +18 - +43** |

* Australia, India, Kenya

** Argentina

**NOTE**

- The appliances rated from SN to T are intended to be used at an ambient temperature between 10 ºC and 43 ºC.

### Dimensions and Clearances

Too small of a distance from adjacent items may result in the degradation of freezing capability and increased electricity costs. Allow over 50 mm of clearance between the back of the appliance and the wall when installing the appliance.

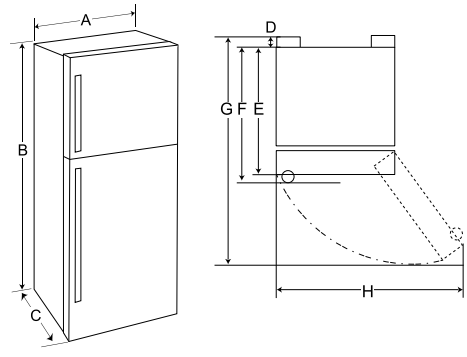


| - | Size (mm) | | | |
|---|---|---|---|---|
| | Type A | Type B | Type C | Type D |
| A | 555 | 700 | 700 | 700 |
| B | 1575 | 1760 | 1720 | 1845 |
| C | 637 | 680 | 680 | 725 |
| D | 5 | 5 | 5 | 5 |
| E | 632 | 675 | 675 | 720 |
| F | 632 | 675 | 675 | 720 |
| G | 875 | 1309 | 1309 | 1354 |
| H | 1037 | 1212 | 1212 | 1212 |

**NOTE**

- You can determine what type of appliance it is by looking at the label inside the appliance.

## Levelling the Appliance

### Adjusting the Levelling Leg

If the appliance seems unsteady, or the doors do not close easily, adjust the appliance's tilt using the instructions below.

global_main.book.book Page 12 Wednesday, June 4, 2025 12:58 PM



1 Turn the levelling leg clockwise to raise that side of the appliance or counterclockwise to lower it.

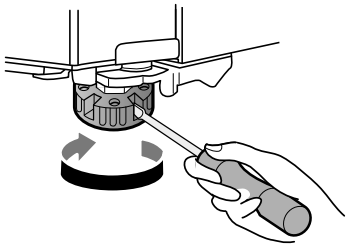

2 Open the doors and check to make sure that they close easily.

**NOTE**

- Leveling the doors may not be possible when the floor is not leveled, or is of weak or poor construction.
- The refrigerator is heavy and should be installed on a rigid and solid surface.
- Some timber flooring may cause levelling difficulties if it flexes excessively.

# Turning on the Power

## Connecting the Appliance

To turn on the appliance, connect the power plug into the outlet socket. Do not double up with other appliances on the same outlet.

**NOTE**

- After connecting the power supply cord (or plug) to the outlet, wait enough time before you put food into the appliance. If you add food before the appliance has cooled completely, your food may spoil.
- To turn off the appliance, disconnect the power plug from the outlet socket.

# Moving the Appliance for Relocation

## Moving the Appliance

1 Remove all food from inside the appliance.

2 Fix the power plug.

- Models with a power plug hook:

  Pull the power plug out, insert and fix it into the power plug hook at the rear or on top of the appliance.
- Models without a power plug hook:

  Pull the power plug out and fix the power supply cable with a tape to the side of the appliance where the power socket is located at the installation site.

3 Tape parts such as shelves and the door handle to prevent from falling off while moving the appliance.

4 Move the appliance with more than two people carefully. When transporting the appliance over a long distance, keep the appliance upright.

**⚠ CAUTION**

- Move the appliance carefully on sensitive floors to avoid damage to the floor.
  - Use cardboard, floor mat or carpet to prevent scratches on the floor when installing or moving the appliance.

global_main.book.book Page 13 Wednesday, June 4, 2025 12:58 PM





- Do not move the appliance in zigzags.

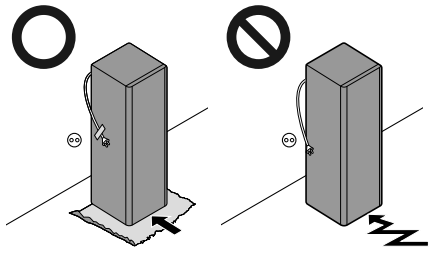

**5** After installing the appliance, connect the power plug into a mains outlet socket and switch it on.

global_main.book.book Page 14 Wednesday, June 4, 2025 12:58 PM



# OPERATION

## Before Use

### Notes for Operation

- Before placing food in the appliance, clean the inside and outside of the appliance with warm water and a mild washing-up liquid to remove manufacturing residues.
- Users should keep in mind that frost can form if the door is not closed completely or if the humidity is high during the summer.
- Ensure there is sufficient space between food stored on the shelf or door basket to allow the door to close completely.
- Opening the door for long periods can cause a significant increase of the temperature in the compartments of the appliance.
- If the refrigerating appliance is left empty for long periods, switch off, defrost, clean, dry, and leave the door open to prevent mould developing within the appliance.
- Note that a temperature rise after defrosting has a permissible range in the appliance specifications. If you wish to minimise the impact on the food storage due to a temperature rise, seal or wrap the stored food in several layers.

### Door Open Alarm

This feature is only available on some models.

The alarm sounds if the door is left open or not completely closed.

**NOTE**

- Contact the LG Electronics customer information centre if the alarm sound continues even after closing all doors.

### Failure Detection

The appliance can automatically detect problems during the operation.

**NOTE**

- If a problem is detected, the appliance may not operate and an error code is displayed even when any button is pressed.
- If an error code is indicated on the display, do not turn off the power. Immediately contact the LG Electronics customer information centre and report the error code. If you turn off the power, the repair technician from the our information centre may have difficulty finding the problem.

### Suggestion for Energy Saving

- For the most efficient use of energy, keep all inner parts (e.g. door bins, drawers and shelves) on their original location. Altering their positions may result in less efficient energy consumption or performance.
- Ensure there is sufficient space between stored foods. This allows cold air to be circulated evenly and lowers electricity bills.
- Store hot food only after it has cooled in order to prevent dew or frost.
- When storing food in the freezer compartment, set the freezer temperature lower than the temperature indicated on the food.
- Do not set the temperature of the appliance lower than needed.
- Do not put food near the temperature sensor of the fridge compartment. Keep a distance of at least 3 cm from the sensor.

### Storing Foods Effectively

- Food may freeze or spoil if stored at the wrong temperature. Set the refrigerator to the correct temperature for the food being stored.
- Store frozen food or refrigerated food inside sealed containers.
- Check the expiration date and label (storage instructions) before storing food in the appliance.

global_main.book.book Page 15 Wednesday, June 4, 2025 12:58 PM





- Do not store food for a long period of time if it spoils easily at a low temperature.
- Do not place unfrozen food in direct contact with food that is already frozen. Do not store excessive amounts of fresh food.
- Freeze food in portion-sized quantities for faster freezing, easier thawing and processing.
- Place the refrigerated food or frozen food in each fridge or freezer compartment immediately after purchasing.
- Store raw meat and fish in suitable containers in the refrigerator, so that it is not in contact with or drip onto other food.
- Refrigerated foods and other food items can be stored on top of the vegetable drawer.
- Avoid refreezing any food which has been completely thawed. Freezing any food which has been completely thawed again will lower its taste and nutrition.
  - Only take out the amount of food that you need. Consume thawed food quickly. It can only be refrozen after being cooked.
- Cool hot food before storing. If too much hot food is placed inside, the internal temperature of the appliance can increase and negatively affect other foods stored in the appliance.
- Do not overfill the appliance. Cold air can not circulate properly if the appliance is overfilled.
- If you set an excessively low temperature for food, it may become frozen. Do not set a temperature lower than the required temperature for the food to be stored correctly.
- If there are chill compartments in the appliance, do not store vegetables and fruits with higher moisture content in the chill compartments as they may freeze due to the lower temperature.
- Always follow the food manufacturer's instructions on the permissible storage duration of frozen food. Do not exceed the recommended storage time of food.
  - Mark the storage date, permissible storage duration, and the food name on the packaging to prevent it from exceeding the storage time limit.
- In the event of a blackout, call the electricity company and ask how long it is going to last.
  - You should avoid door openings while the power is off.
  - When the power supply gets back to normal, check the condition of the food.
  - If the power outage lasts longer, especially during the summer months, please follow these guidelines:

    - Do not place additional food into the appliance during the power outage.

    - If the power outage is announced and is expected to last for more than 10 hours, prepare some ice and put it in a container on the top shelf of the fridge.

    - Due to the temperature increase in the appliance during a power outage or other malfunction, the shelf life of the food will be reduced and its quality will decrease. If necessary, process thawed food and freeze it again in the cooked state.

## Maximum Freezing Capacity

- For maximum freezing capacity, set the freezer temperature to the coldest temperature setting.
- **Express Freeze** function will allow the freezer to reach its maximum freezing capacity. This generally takes up to 21 hours and automatically switches off.
- **Express Freeze** must be switched on when fresh products are placed in the freezer compartment.
- To freeze food items quickly, store the food in the center of upper compartment. Food items will freeze most quickly in the zone.
- For models with **Control Panel 2 (Type B)**
  - To freeze food items quickly, store the food in the left of lower compartment. Food items will freeze most quickly in the zone.
- To get better air circulation, insert all inner parts like baskets, drawers, and shelves.

## Freezing the Maximum Amount of Food

If large quantities of food are to be stored, the icemaker should be taken out of the appliance and

global_main.book.book Page 16 Wednesday, June 4, 2025 12:58 PM



the food should be stacked directly on the freezer shelves in the freezer compartment.

**NOTE**

- Insert the icemaker in the right position.

## Two Star Compartment

This feature is only available on some models.

- Two star (**) basket or drawer can be used to store ice and food from -12 °C to -18 °C for short periods.
- Two star frozen food compartments are suitable for storing pre-frozen food, storing or making icecream and making ice cubes.
- Two star compartments are not suitable for the freezing of fresh food.
- The number of freezer door baskets and freezer drawers with two star sections may vary depending on the model purchased.

global_main.book.book Page 17 Wednesday, June 4, 2025 12:58 PM





# Product Features

The appearance or components of the appliance may differ from model to model.

## Interior

*1 This feature is only available on some models.

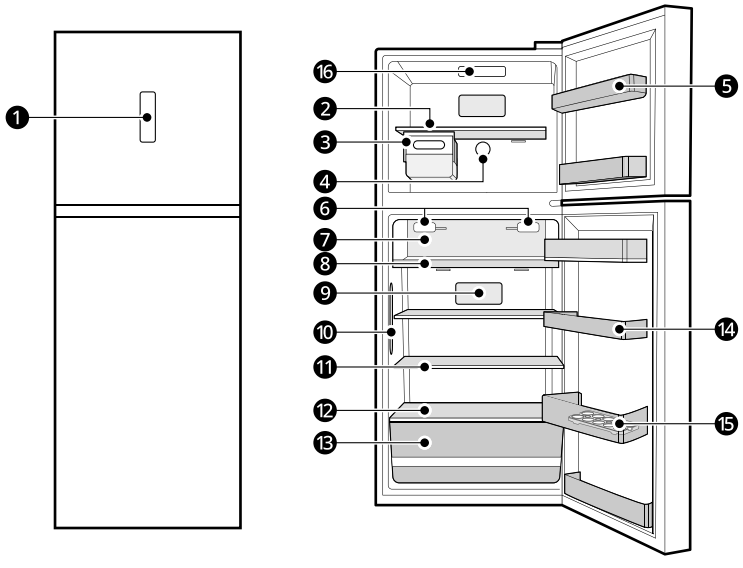


❶ **Control Panel***1

Sets the fridge temperature.

❷ **Freezer Shelf**

Stores frozen foods such as meat, fish, and ice cream.

❸ **Moving Icemaker***1

This is where ice is manually produced and stored.

- You can slide the icemaker along the shelf from side to side to any desired position.

❹ **Freezer Temperature Controller (Micom/Knob Dial)***1

This controller regulates the air flow to the freezer compartment by setting it to a suitable balance.

❺ **Freezer Door Basket**

Stores small packages of frozen food. Do not store ice cream or food which will be stored for a long period of time.

### NOTE

- The number of freezer door baskets with two star section may vary depending on model purchased.

global_main.book.book Page 18 Wednesday, June 4, 2025 12:58 PM



❻ **Air filter**

Reduces odours inside the fridge compartment.

❼ **Fresh Room**[*1]

This is where food items are stored at a colder temperature than the regular fridge area.

❽ **Pull Out Tray**

❾ **Fridge Temperature Control Panel**[*1]

Sets the fridge temperature.

❿ **Door Cooling+**[*1]

Cold air comes out to keep the fridge door basket cool.

⓫ **Fridge Shelf**

Stores refrigerated foods and fresh foods.
Stores the foods with higher moisture content at the front of the shelf.
The shelf height can be adjusted by inserting the shelf in another groove of different height.

⓬ **Bottom Shelf**

Stores refrigerated foods and fresh foods.

## ⚠ CAUTION

- Do not store any items at the front of the bottom shelf. The items may fall and cause an injury or appliance damage.

⓭ **Fridge Drawer**

Stores fruits and vegetables.

⓮ **Fridge Door Basket**[*1]

Stores small packages of refrigerated foods, drinks and sauce containers.

⓯ **Movable Egg Tray**

This is where eggs are stored.

- You can move it to and use it at a desired position as needed. However, do not use it as the ice bin or place it on the shelf on top of the fridge or the vegetables drawer.

⓰ **LED Lamp**[*1]

The LED lamps inside the appliance light up when you open the door.

global_main.book.book Page 19 Wednesday, June 4, 2025 12:58 PM





# Control Panel

The actual control panel may differ from model to model.

## Control Panel and Functions

*1 This control panel is only available on some models.

**Control Panel 1: On the Freezer Door*1**

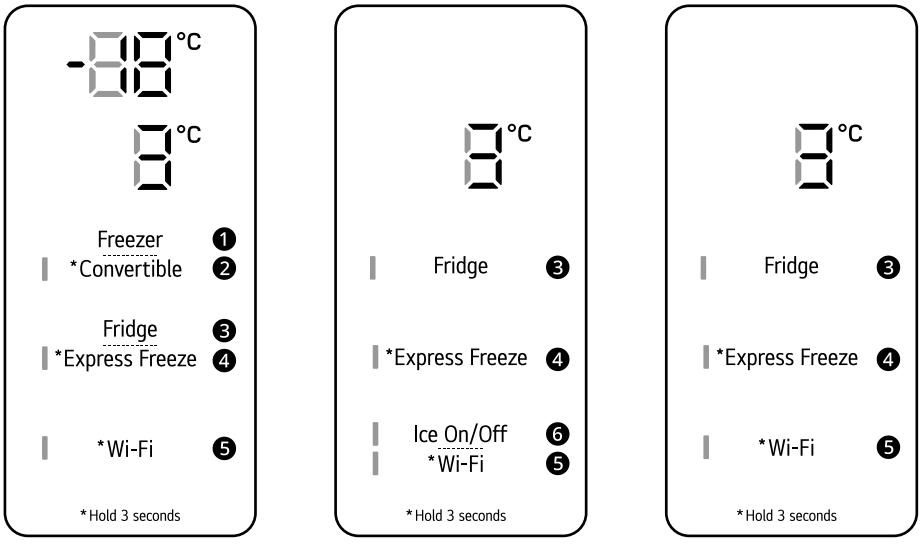


❶ **Freezer**

Press this button repeatedly to select a desired temperature between -23 °C and -15 °C.

- The default freezer temperature is -18 °C.

❷ **Convertible**

You can set the freezer temperature to the same range as the fridge temperature.

- Press this button for 3 seconds. When the left LED light lit, press the **Fridge** button repeatedly to select a desired temperature between 1 °C and 7 °C.
- Press this button for 3 seconds to disable Convertible function, as LED light off.

**NOTE**

- When in Convertible mode, **Express Freeze** and **Freezer** buttons become inactive.

❸ **Fridge**

Press this button repeatedly to select a desired temperature between 1 °C and 7 °C.

- The default fridge temperature is 3 °C.

global_main.book.book Page 20 Wednesday, June 4, 2025 12:58 PM



## NOTE

- The actual inner temperature varies depending on the food status, as the indicated setting temperature is a target temperature, not actual temperature within the appliance.

❹ **Express Freeze**

This function can quickly freeze a large amount of ice or frozen foods.

- This function is enabled and disabled in turn each time you press the button for 3 seconds.
- This function automatically terminates after a specific period has passed.

❺ **Wi-Fi**

This button allows the appliance to connect to a home Wi-Fi network. Refer to Smart Functions for information on the initial setup of the **LG ThinQ** application.

❻ **Ice On/Off**

Press the **Ice On/Off** button to turn the icemaker on/off.

## NOTE

- For optimal food preservation, increasing or decreasing 1 °C from the default temperature is recommended for each compartment.
- The control panel will turn off automatically for energy saving.
- If any finger or skin comes into contact with the control panel while cleaning it, the button function may operate.

**Control Panel 2: Inside the Fridge*1**
**Type A**

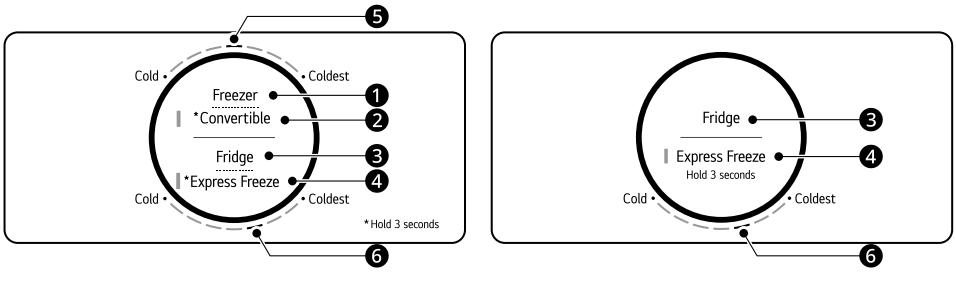


❶ **Freezer**

Press this button repeatedly to select a desired temperature between **Cold** and **Coldest**.

- The default freezer temperature is ❺.

❷ **Convertible**

You can set the freezer temperature to the same range as the fridge temperature.

- Press this button for 3 seconds. When the left LED light lit, press the **Fridge** button repeatedly to select a desired temperature between **Cold** and **Coldest**.
- Press this button for 3 seconds to disable Convertible function, as LED light off.

global_main.book.book Page 21 Wednesday, June 4, 2025 12:58 PM





❸ **Fridge**

Press this button repeatedly to select a desired temperature between **Cold** and **Coldest**.

- The default fridge temperature is ❻.

❹ **Express Freeze**

This function can quickly freeze a large amount of ice or frozen foods.

- This function is enabled and disabled in turn each time you press the button for 3 seconds.
- This function automatically terminates after a specific period has passed.

**Type B**

Turn the dial to select a desired temperature between **Cold** and **Coldest**.

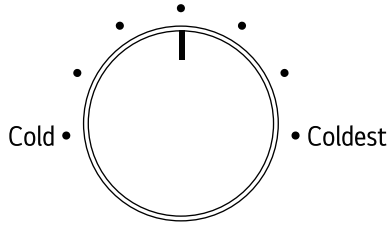


**Type C**

Turn the dial to select a desired temperature between **Cold** and **Coldest**.

To quickly freeze a large quantity of ice or frozen foods, adjust the knob to the **Express Freeze** setting.

- This function automatically terminates after 21 hours have passed.

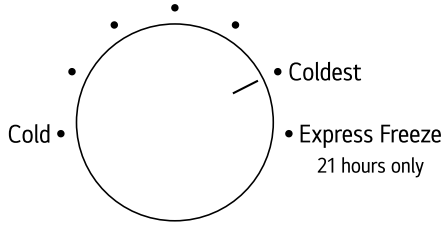


## NOTE

- For optimal food preservation, increasing or decreasing one level from the default temperature is recommended.
- After the **Express Freeze** function is deactivated, the controller will still indicate the **Express Freeze** mode, but the temperature setting will automatically revert to the medium level temperature setting.

global_main.book.book Page 22 Wednesday, June 4, 2025 12:58 PM



**Control Panel 3: Inside the Freezer*1**
Turn the dial to select a desired temperature between **Min** and **Max**.

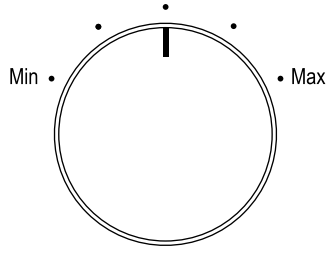


**NOTE**

- For optimal food preservation, increasing or decreasing one level from the default temperature is recommended.

## Setting the Freezer Temperature Level (1-5)

The temperature can be adjusted from level 1 to level 5. Level 3 is recommended.

- You can lower the temperature by turning the controller to the right and raise the temperature by turning the controller to the left.
- Setting the controller at level 4-5 will maintain a low temperature in the freezer. When the quick freezing is finished (level 5), set the controller to the recommended level.

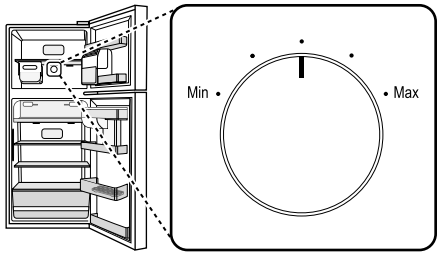


**NOTE**

- For optimal food preservation, increasing or decreasing one level from the default temperature is recommended.
- Wait until 2 or 3 hours have passed after connecting the appliance to the outlet before storing food in the appliance.
- The internal temperatures could be affected by the location of the appliance, the ambient temperature, the frequency of door opening and so on.

# Icemaker

This feature is only available on some models.

## Using the Moving Icemaker

This is where ice is manually produced and stored.

1 Pull out the ice tray from the Icemaker.

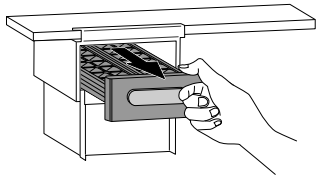

global_main.book.book Page 23 Wednesday, June 4, 2025 12:58 PM





2 Fill the ice tray with water up to the marked water line.

3 Hold and push the ice tray back to its original position.

4 Hold the lever of the ice tray and turn it clockwise to release the ice cubes.

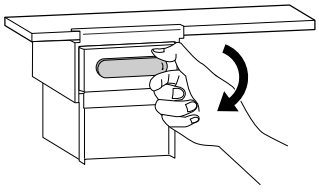

5 Hold the handle of the ice bucket and pull out it.

**⚠ WARNING**

- Fill with potable water only.

**⚠ CAUTION**

- Be careful not to spill water when pushing the ice tray.
- Be careful not to twist the ice tray with force as it can be broken.
- If you open and close the freezer door frequently, it may take longer for water to be frozen.
- Do not fill the ice bucket with water.

**NOTE**

- You can remove the ice maker to create more space inside the freezer compartment if you do not use it.
- If the ice tray is overfilled, the ice cubes may stick together and be difficult to remove.
- Ice can be removed more easily by pouring water on the ice tray.

## Using the Ice Tray

This is where ice is manually produced.

Fill the ice tray with water up to the marked water line.

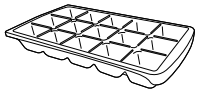

**⚠ WARNING**

- Fill with potable water only.

**⚠ CAUTION**

- Be careful not to twist the ice tray with force as it can be broken.
- If you open and close the freezer door frequently, it may take longer for water to be frozen.

**NOTE**

- If the ice tray is overfilled, the ice cubes may stick together and be difficult to remove.
- Ice can be removed more easily by pouring water on the ice tray.

# Fridge Drawer

## Removing and Refitting the Fresh Vegetable Drawer

1 Remove the contents of the drawer. Hold the handle of the vegetable drawer and gently pull it out outward until the drawer stops completely.

global_main.book.book Page 24 Wednesday, June 4, 2025 12:58 PM



2 Lift the vegetable drawer up and remove it by pulling it out.

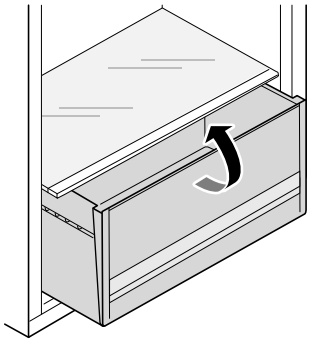

3 Mount the vegetable drawer in the reverse order of the removal process.

**⚠ CAUTION**

- Remove all food from inside the appliance, otherwise injuries can be caused by the weight of stored foods.

# Door Basket

## Removing/Refitting the Door Basket

1 Hold both edges of the basket and remove it by lifting it upward.

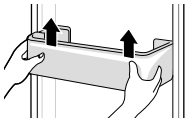

2 Refit the door basket in the reverse order of the removal process.

# Shelf

## Removing/Refitting the Shelf

1 Hold the both side of the shelf. Lift the shelf up and remove it by pulling it out.

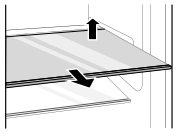

2 Refit the shelf by sliding it inward until the shelf snaps into the frame.

**⚠ CAUTION**

- Do not place food on the marked area ❶ of the bottom shelf. The fridge door may not close completely.

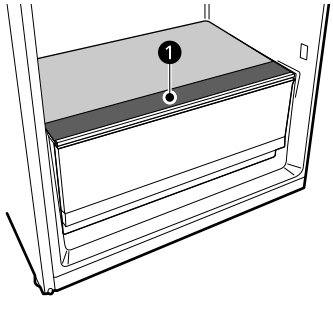

global_main.book.book Page 25 Wednesday, June 4, 2025 12:58 PM



# SMART FUNCTIONS

## LG ThinQ Application

This feature is only available on models with Wi-Fi.

The **LG ThinQ** application allows you to communicate with the appliance using a smartphone.

### LG ThinQ Application Features

Communicate with the appliance from a smartphone using the convenient smart features.

**Smart Diagnosis**

- If you experience a problem while using the appliance, this smart diagnosis feature will help you diagnose the problem.

**Settings**

- Allows you to set various options on the appliance and in the application.

**NOTE**

- In the following cases, you must update the network information for each appliance in the **LG ThinQ** application under **Device Cards** > **Settings** > **Change Network**.
  - wireless router is changed
  - wireless router password is changed
  - Internet service provider is changed
- The application is subject to change for appliance improvement purposes without notice to users.
- Functions may vary by model.

### Installing LG ThinQ Application and Connecting an LG Appliance

ENGLISH

#### Models with QR Code

Scan the QR code attached to the product using the camera or a QR code reader application on your smartphone.

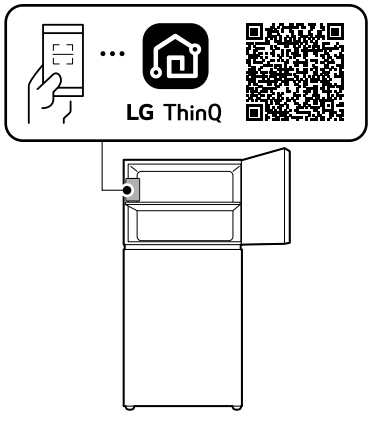


#### Models without QR Code

1. Search for and install the **LG ThinQ** application from the Google Play Store or Apple App Store on a smartphone.
2. Run the **LG ThinQ** application and sign in with your existing account or create an LG account to sign in.
3. Touch the add (+) button on the **LG ThinQ** application to connect your LG appliance. Follow the instructions in the application to complete the process.

**NOTE**

- To verify the Wi-Fi connection, check that the Wi-Fi indicator on the control panel is lit.

global_main.book.book Page 26 Wednesday, June 4, 2025 12:58 PM



**NOTE**

- The appliance supports 2.4 GHz Wi-Fi networks only. To check your network frequency, contact your Internet service provider or refer to your wireless router manual.
- **LG ThinQ** is not responsible for any network connection problems or any faults, malfunctions, or errors caused by network connection.
- The surrounding wireless environment can make the wireless network service run slowly.
- If the distance between the appliance and the wireless router is too far, the signal strength becomes weak. It may take a long time to connect or installation may fail.
- If the appliance is having trouble connecting to the Wi-Fi network, it may be too far from the router. Purchase a Wi-Fi repeater (range extender) to improve the Wi-Fi signal strength.
- The network connection may not work properly depending on the Internet service provider.
- The Wi-Fi connection may not connect or may be interrupted because of the home network environment.
- The appliance cannot be connected due to problems with the wireless signal transmission. Unplug the appliance and wait about a minute before trying again.
- If the firewall on your wireless router is enabled, disable the firewall or add an exception to it.
- The wireless network name (SSID) should be a combination of English letters and numbers. (Do not use special characters.)
- Smartphone user interface (UI) may vary depending on the mobile operating system (OS) and the manufacturer.
- If the security protocol of the router is set to **WEP**, you may fail to set up the network. Please change it to other security protocols (**WPA2** is recommended) and connect the product again.
- To disable the Wi-Fi function, press and hold the **Wi-Fi** button for 3 seconds. The Wi-Fi indicator will be turned off.
- To reconnect the appliance or add another user, press and hold the **Wi-Fi** button for 3 seconds to temporarily turn it off. Run the **LG ThinQ** application and follow the instructions in the application to connect the appliance.

## Open Source Software Notice Information

To obtain the source code that is contained in this product, under GPL, LGPL, MPL, and other open source licenses that have the obligation to disclose source code, and to access all referred license terms, copyright notices and other relevant documents, please visit https://opensource.lge.com.

LG Electronics will also provide open source code to you on CD-ROM for a charge covering the cost of performing such distribution (such as the cost of media, shipping, and handling) upon email request to opensource@lge.com.

This offer is valid to anyone in receipt of this information for a period of three years after our last shipment of this product.

# Smart Diagnosis

This feature is only available on some models.

Use this feature to help you diagnose and solve problems with your appliance.

**NOTE**

- For reasons not attributable to LGE's negligence, the service may not operate due to external factors such as, but not limited to, Wi-Fi unavailability, Wi-Fi disconnection, local app store policy, or app unavailability.
- The feature may be subject to change without prior notice and may have a different form depending on where you are located.

## Using LG ThinQ to Diagnose Issues

If you experience a problem with your Wi-Fi equipped appliance, it can transmit troubleshooting data to a smartphone using the **LG ThinQ** application.

global_main.book.book Page 27 Wednesday, June 4, 2025 12:58 PM





- Launch the **LG ThinQ** application and select the **Smart Diagnosis** feature in the menu. Follow the instructions provided in the **LG ThinQ** application.

## Using Audible Diagnosis to Diagnose Issues

Follow the instructions below to use the audible diagnosis method.

- Launch the **LG ThinQ** application and select the **Smart Diagnosis** feature in the menu. Follow the instructions for audible diagnosis provided in the **LG ThinQ** application.

1 Open the fridge door.

2 Close and open the fridge door 5 times within 8 seconds.

**NOTE**

- If you do not close and open the door 5 times within 8 seconds, the time will be reset. Then you have to close and open the door 5 times again.

3 If the buzzer sounds 4 times, open the freezer door and hold the phone near the speaker hole.

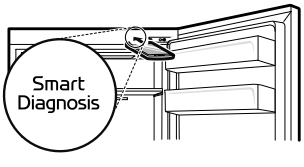


4 After the data transfer is complete, the diagnosis will be displayed in the application.

**NOTE**

- For best results, do not move the phone while the tones are being transmitted.

global_main.book.book Page 28 Wednesday, June 4, 2025 12:58 PM



# MAINTENANCE

## Cleaning

### General Cleaning Tips

- Performing manual defrosting, maintenance or cleaning of the appliance while food is stored in the freezer can raise the temperature of the food and reduce its storage life.
- Regularly clean any surfaces that can come in contact with food.
- When cleaning the inside or outside of the appliance, do not wipe it with a rough brush, toothpaste, or flammable materials. Do not use cleaning agents containing flammable substances. This may cause discolouration or damage to the appliance.
  - Flammable substances: alcohol (ethanol, methanol, isopropyl alcohol, isobutyl alcohol, etc.), thinner, bleach, benzene, flammable liquid, abrasive, etc.
- After cleaning, check if the power cable is damaged.

### Cleaning the Exterior

- When cleaning the outside air vents of the appliance by means of vacuuming, then the power cord should be unplugged from the outlet to avoid any static discharge that can damage the electronics or cause an electric shock. Regular cleaning of the rear and side ventilation covers is recommended to maintain reliable and economical operation of the unit.
- Keep the air vents on the exterior of the appliance clean. Blocked air vents can cause fire or appliance damage.
- For the appliance exterior, use a clean sponge or soft cloth and a mild detergent in warm water. Do not use abrasive or harsh cleaners. Dry thoroughly with a soft cloth. Do not use contaminated cloths when cleaning the stainless steel doors. Always use a dedicated cloth and wipe in the same direction as the grain. This helps reduce surface staining and tarnishing.

### Cleaning the Interior

- Before removing a shelf or drawer from inside the appliance, remove all stored foods from the shelf or drawer to prevent injury or damage to the appliance. Otherwise, injury may occur due to the weight of stored foods.
- Detach the shelves and drawers and clean them with water and a mild detergent, and then dry them sufficiently, before replacing them.
- Regularly wipe the door gaskets and door seals with water and a mild detergent.
- Door basket spills and stains should be cleaned as they can compromise storage ability of the basket and could even be damaged.
- Never clean the shelves, door baskets, or containers in the dishwasher or in hot water. The parts may become deformed, and glass may shatter due to the heat.
- The automatic defrosting system in the appliance ensures that the compartment remains free of ice buildup under normal operating conditions. Users do not need to defrost it manually.

## Deodorizer

This feature is only available on some models.

### Reusing the Deodorizer

The deodorizer reduces unpleasant odours in the fresh food compartment without harming you or the food.

1 Remove the deodorizer from the ceiling of the refrigerator compartment.

**⚠ CAUTION**

- Do not use a sharp tool as it could damage the deodorizer.

global_main.book.book Page 29 Wednesday, June 4, 2025 12:58 PM





**2** Remove moisture and odors from the deodorizer with the heat of a hair dryer or leave it in a sunny spot and let the UV in sunlight do it for you.

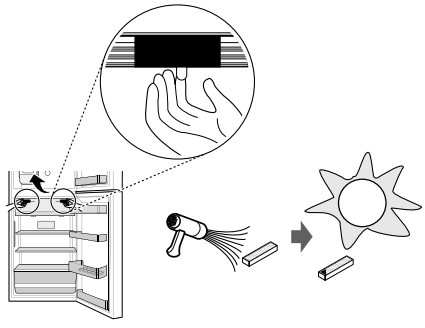

global_main.book.book Page 30 Wednesday, June 4, 2025 12:58 PM



# TROUBLESHOOTING

## Before Calling for Service

### Cooling

| Symptoms | Possible Cause & Solution |
|---|---|
| **There is no refrigeration or freezing.** | **Is there a power interruption?**<br>• Check the power of other appliances. |
| | **Appliance is unplugged.**<br>• Plug the power plug in the outlet properly. |
| | **A fuse in your home may be blown or the circuit breaker tripped. Or the appliance is connected to a GFCI (Ground Fault Circuit Interrupter) outlet, and the outlet's circuit breaker has tripped.**<br>• Check the main electrical box and replace the fuse or reset the circuit breaker. Do not increase fuse capacity. If the problem is a circuit overload, have it corrected by a qualified electrician.<br>• Reset the circuit breaker on the GFCI. If the problem persists, contact an electrician. |
| **There is poor refrigeration or freezing.** | **Is the fridge or freezer temperature set to its warmest setting?**<br>• Set the fridge or freezer temperature to a colder setting. |
| | **Is the appliance in direct sunlight, or is it near a heat generating object such as cooking oven or heater?**<br>• Check the installation area and reinstall it away from heat generating objects. |
| | **Did you store hot food without cooling it first?**<br>• Cool the hot food first before putting it in the fridge or freezer compartment. |
| | **Did you put in too much food?**<br>• Maintain an appropriate space between food. |
| | **Are the appliance doors completely closed?**<br>• Completely close the door and make sure that stored food is not obstructing in the door. |
| | **Is there enough space around the appliance?**<br>• Adjust the installation position to make enough space around the appliance. |
| **The appliance contains a bad smell.** | **Is the fridge or freezer temperature set to 'Warm'?**<br>• Set the fridge or freezer temperature to a colder setting. |

global_main.book.book Page 31 Wednesday, June 4, 2025 12:58 PM





| Symptoms | Possible Cause & Solution |
|---|---|
| **The appliance contains a bad smell.** | **Did you put in food with a strong smell?**<br>• Store foods with strong smells in sealed containers. |
| | **Vegetables or fruit may have spoiled in the drawer.**<br>• Throw away rotten vegetables and clean the vegetable drawer. Do not store vegetables too long in the vegetable drawer. |

## Condensation & Frost

| Symptoms | Possible Cause & Solution |
|---|---|
| **There is condensation inside the appliance or on the bottom of the vegetable drawer cover.** | **Did you store hot food without cooling it first?**<br>• Cool the hot food first before putting it inside the fridge or freezer. |
| | **Did you leave the appliance door open?**<br>• Although the condensation will disappear soon after you close the appliance door, you can wipe it with a dry cloth. |
| | **Do you open and close the appliance door too frequently?**<br>• Condensation can form due to the temperature difference from the outside. Wipe out the dampness with a dry cloth. |
| | **Did you put warm or moist food inside without sealing it in a container?**<br>• Store food in a covered or sealed container. |

## Parts & Features

| Symptoms | Possible Cause & Solution |
|---|---|
| **The inside lamp in the appliance does not turn on.** | **Lamp failure**<br>• Close the door and re-open. If the lamp does not turn on, please contact the LG Electronics customer information centre. Do not attempt removal of the lamp. |

## Noises

| Symptoms | Possible Cause & Solution |
|---|---|
| **The appliance is noisy and generates abnormal sounds.** | **Is the appliance installed on a weak floor or improperly levelled?**<br>• Install the appliance on a solid and flat area. |

global_main.book.book Page 32 Wednesday, June 4, 2025 12:58 PM



| Symptoms | Possible Cause & Solution |
|---|---|
| **The appliance is noisy and generates abnormal sounds.** | **Does the rear of the appliance touch the wall?**<br>• Adjust the installation position to allow enough clearance around the appliance. |
| | **Are objects scattered behind the appliance?**<br>• Remove the scattered objects from behind the appliance. |
| | **Is there an object on top of the appliance?**<br>• Remove the object on top of the appliance. |

## Wi-Fi

| Symptoms | Possible Cause & Solution |
|---|---|
| **Your home appliance and smartphone are not connected to the Wi-Fi network.** | **The password for the Wi-Fi that you are trying to connect to is incorrect.**<br>• Find the Wi-Fi network connected to your smartphone and remove it, then register your appliance on **LG ThinQ**. |
| | **Mobile data for your smartphone is turned on.**<br>• Turn off the **Mobile data** of your smartphone and register the appliance using the Wi-Fi network. |
| | **The wireless network name (SSID) is set incorrectly.**<br>• The wireless network name (SSID) should be a combination of English letters and numbers. (Do not use special characters.) |
| | **The router frequency is not 2.4 GHz.**<br>• Only a 2.4 GHz router frequency is supported. Set the wireless router to 2.4 GHz and connect the appliance to the wireless router. To check the router frequency, check with your Internet service provider or the router manufacturer. |
| | **The distance between the appliance and the router is too far.**<br>• If the distance between the appliance and the router is too far, the signal may be weak and the connection may not be configured correctly. Move the location of the router so that it is closer to the appliance. |

## Memo

## Memo

## Memo

LG