www.lg.com

MFL71833936220 3REV00

UQ80*
UQ90*

Quick Start Guide

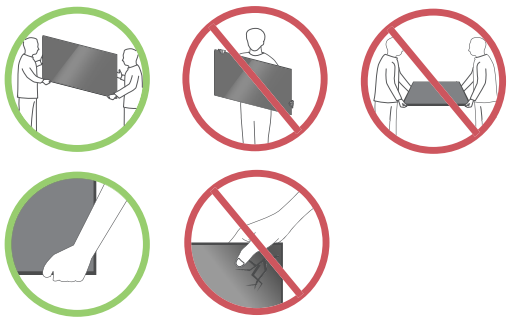

Images shown in manual may vary depending on model

Unpacking

Check your product box for the following items.
If there are any missing accessories, contact the local dealer where you purchased your product.
The illustrations in this manual may differ from the actual product and item.

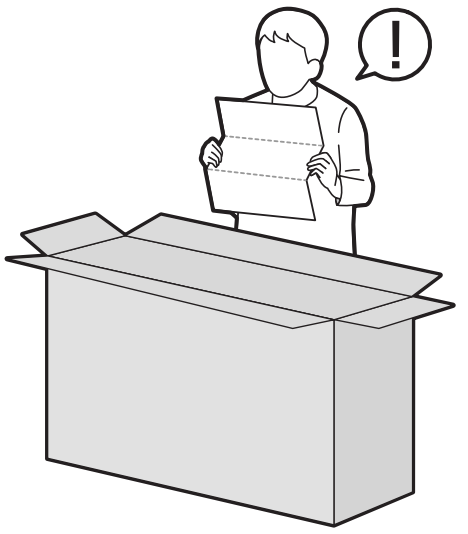

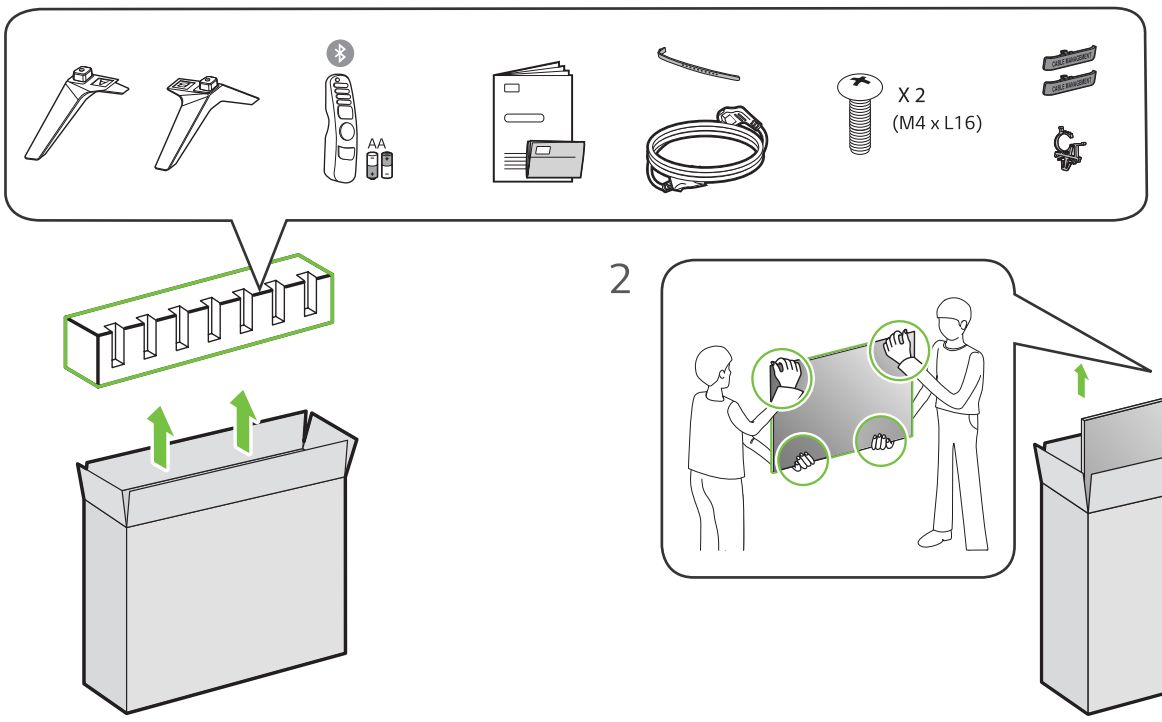

1

2

3

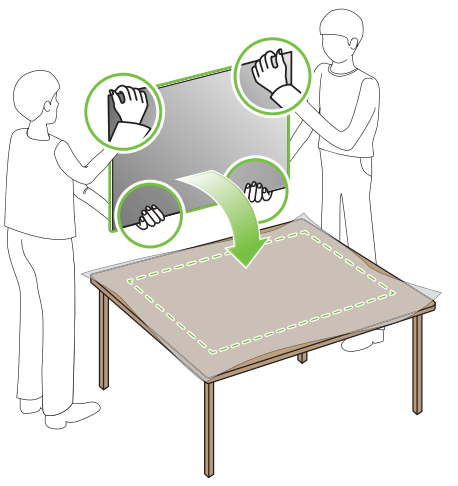

CAUTION

Image shown may differ from your TV

When attaching the stand to the TV set, place the screen facing down on a cushioned table or flat surface to protect the screen from scratches.

1

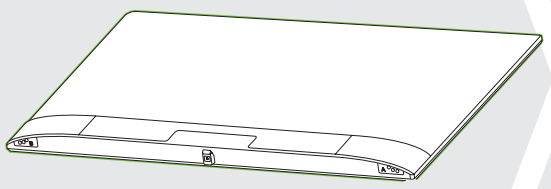

2

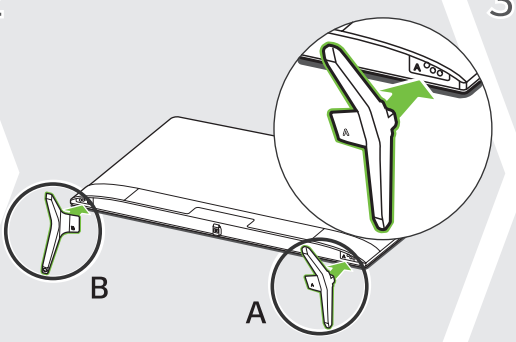

3

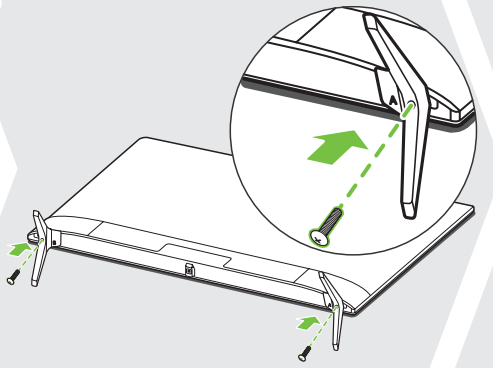

4

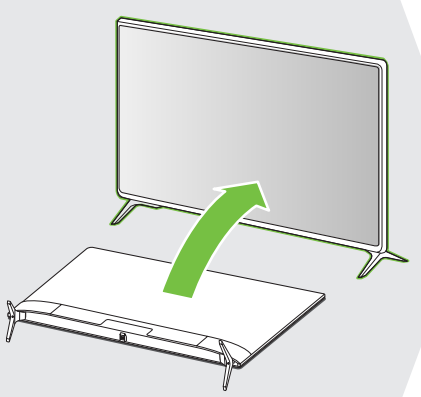

5

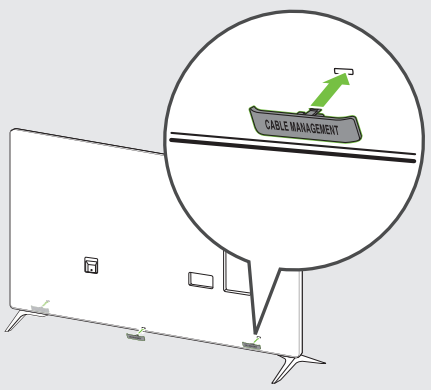

6

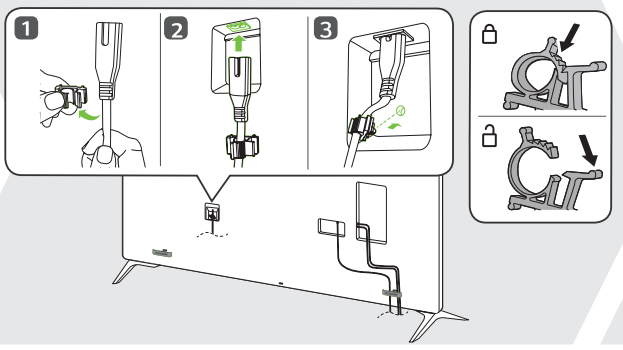

7

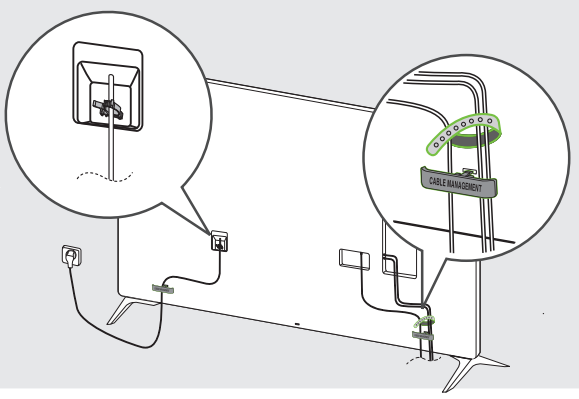

IN020222



NOTE

- Do not look into the optical output ports, looking at the laser beam may damage your vision
- Audio with ACP (Audio Copy Protection)function may block digital audio output.

NOTE

- Some USB Hubs may not work, if a USB device connected using a USB Hub is not detected, connect it to the USB port on the TV directly
- Connect the external power source if your USB is needed.

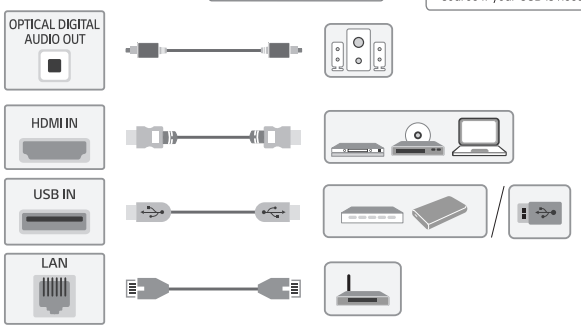

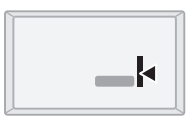

ARC (Audio Return Channel)
An external audio device that supports SIMPLINK and ARC must be connected using HDMI IN eARC/ARC port.

When connected with a high-speed HDMI cable, the external audio device that supports ARC outputs SPDIF audio without additional audio cable and supports the SIMPLINK function.

NOTE

- Some USB Hubs may not work, if a USB device connected using a USB Hub is not detected, connect it to the USB port on the TV directly
- Connect the external power source if your USB is needed.

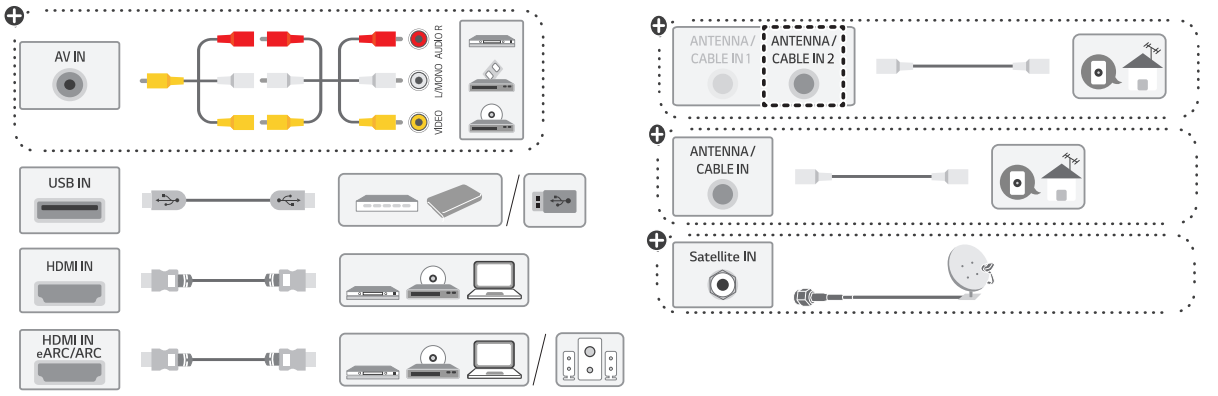

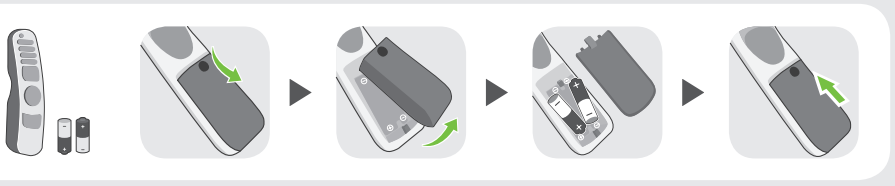



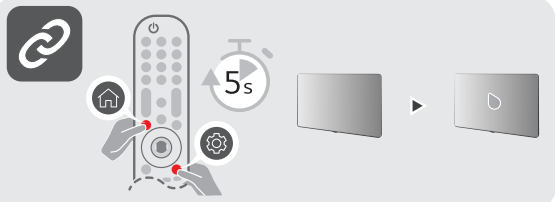



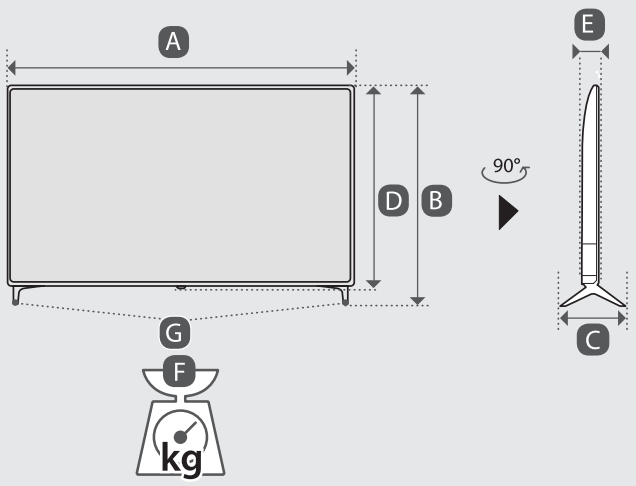

	A	B	C	D	E	F	F - G
	(mm)					(kg)	
43UQ80006LB 43UQ80006LD 43UQ80006LM 43UQ8040PSB 43UQ8020PSB 43UQ8000PSC 43UQ8050PSB 43UQ8040PSK 43UQ8020PSK 43UQ8000PSL 43UQ8050PSK 43UQ9000PSD	967	622	216	564	57.1	8.9	8.8
Power requirement				AC 100-240 V~ 50/60 Hz			

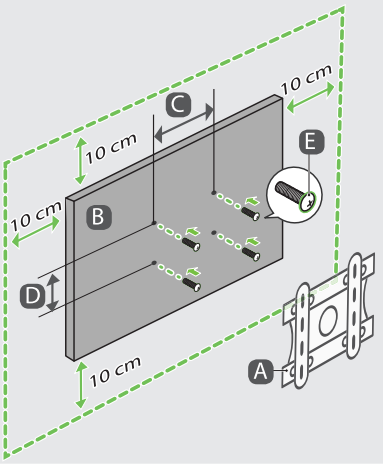

A	B	C x D (mm)	E
Wallmount	43UQ80* 43UQ90*	200 x 200	M6

- Read **Safety and Reference.**

The Analog Gender adapter can be purchased separately at Customer Service.

⊕ : Depending on model