Scan the QR code to see the manual.

OWNER'S MANUAL

FRIDGE & FREEZER

Before beginning installation, read these instructions carefully. This will simplify installation and ensure that the product is installed correctly and safely. Leave these instructions near the product after installation for future reference.

ENGLISH

MFL67227318
Rev.07_012524

www.lg.com

Copyright © 2022-2024 LG Electronics Inc. All Rights Reserved.

TABLE OF CONTENTS

This manual may contain images or content that may be different from the model you purchased.

This manual is subject to revision by the manufacturer.

SAFETY INSTRUCTIONS

READ ALL INSTRUCTIONS BEFORE USE 4
WARNING 4
CAUTION 10

INSTALLATION

Before Installation 12
Removing the Handle 13
Removing the Door and Drawer 14
Connecting the Water Line 18
Levelling and Door Alignment 19
Turning on the Power 20
Moving the Appliance for Relocation 21

OPERATION

Before Use 22
Product Features 24
Control Panel 28
Water Dispenser 30
Ice and Water Dispenser 31
Automatic Icemaker 32
InstaView 35
Door in Door 36
Humidity Controlled Crispers 37
Glide'N'Serve 38
Shelf 39
Door Basket 39
Durabase 40

SMART FUNCTIONS

LG ThinQ Application 41
Smart Diagnosis 42

MAINTENANCE

Cleaning 44
Water Filter 45

TROUBLESHOOTING

Before Calling for Service.....48

APPENDIX

Information.....55

SAFETY INSTRUCTIONS

READ ALL INSTRUCTIONS BEFORE USE

The following safety guidelines are intended to prevent unforeseen risks or damage from unsafe or incorrect operation of the appliance.

The guidelines are separated into **'WARNING'** and **'CAUTION'** as described below.

Safety Messages

⚠	This symbol is displayed to indicate matters and operations that can cause risk. Read the part with this symbol carefully and follow the instructions in order to avoid risk.
⚠	**WARNING** This indicates that the failure to follow the instructions can cause serious injury or death.
⚠	**CAUTION** This indicates that the failure to follow the instructions can cause the minor injury or damage to the product.

WARNING

⚠ WARNING

To reduce the risk of explosion, fire, death, electric shock, injury or scalding to persons when using this product, follow basic precautions, including the following:

Technical Safety

- This appliance is not intended for use by persons (including children) with reduced physical, sensory or mental capabilities, or lack of experience and knowledge, unless they have been given supervision or instruction concerning use of the appliance by a person

responsible for their safety. Children should be supervised to ensure that they do not play with the appliance.

- This appliance is intended to be used in household and similar applications such as:
  - staff kitchen areas in shops, offices and other working environments;
  - farm houses and by clients in hotels, motels and other residential type environments;
  - bed and breakfast type environments;
  - catering and similar non-retail applications.
- This refrigerating appliance is not intended to be used as a built-in appliance.

This symbol alerts you to flammable materials that can ignite and cause a fire if you do not take care.

- This appliance contains a small amount of isobutane refrigerant (R600a), but it is also combustible. When transporting and installing the appliance, care should be taken to ensure that no parts of the refrigerating circuit are damaged.
- The refrigerant and insulation blowing gas used in the appliance require special disposal procedures. Consult with service agent or a similarly qualified person before disposing of them.
- Do not damage the refrigerant circuit.
- If the power cord is damaged or the hole of the outlet socket is loose, do not use the power cord and contact an authorized service centre.
- Do not locate multiple portable socket-outlets or portable power supplies at the rear of the appliance.
- Securely plug the power plug in the outlet socket after completely removing any moisture and dust.
- Never unplug the appliance by pulling on the power cable. Always grip the power plug firmly and pull straight out from the outlet socket.

- Keep ventilation openings, in the appliance enclosure or in the built-in structure, clear of obstruction.
- Do not store explosive substances such as aerosol cans with a flammable propellant in this appliance.
- Do not tilt the appliance to pull or push it when transporting.
- When positioning the appliance, ensure the supply cord is not trapped or damaged.
- Do not use mechanical devices or other means to accelerate the defrosting process.
- Do not use a hair drier to dry the inside of the appliance or place a candle inside to remove the odours.
- Do not use electrical appliances inside the food storage compartments of the appliance, unless they are of the type recommended by the manufacturer.
- Make sure not to get a body part such as a hand or foot stuck while moving the appliance.
- Disconnect the power cord before cleaning the appliance interior or exterior.
- Do not spray water or inflammable substances (toothpaste, alcohol, thinner, benzene, flammable liquid, abrasive, etc.) over the interior or exterior of the appliance to clean it.
- Do not clean the appliance with brushes, cloths or sponges with rough surfaces or which are made of metallic material.
- Only qualified service personnel from LG Electronics service centre should disassemble, repair, or modify the appliance. Contact an LG Electronics customer information centre if you move and install the appliance in a different location.

Risk of Fire and Flammable Materials

- If a leak is detected, avoid any naked flames or potential sources of ignition and air the room in which the appliance is standing for several minutes. In order to avoid the creation of a flammable gas air mixture if a leak in the refrigerating circuit occurs, the size of the room in which the appliance is used should correspond to the

amount of refrigerant used. The room must be 1 m^2 in size for every 8 g of R600a refrigerant inside the appliance.

- Refrigerant leaking out of the pipes could ignite or cause an explosion.
- The amount of refrigerant in your particular appliance is shown on the identification plate inside the appliance.

Installation

- This appliance should only be transported by two or more people holding the appliance securely.
- Install the appliance on a firm and level floor.
- Do not install the appliance in a damp and dusty place. Do not install or store the appliance in any outdoor area, or any area that is subject to weathering conditions such as direct sunlight, wind, rain, or temperatures below freezing.
- Do not place the appliance in direct sunlight or expose it to the heat from heating appliances such as stoves or heaters.
- Be careful not to expose the rear of the appliance when installing.
- Install the appliance in a place where it is easy to unplug the power plug of the appliance.
- Be careful not to let the appliance door fall during assembly or disassembly.
- Be careful not to pinch, crush, or damage the power cable during assembly or disassembly of the appliance door.
- Be careful not to point the power plug up or let the appliance lean against the power plug.
- Do not connect a plug adapter or other accessories to the power plug.
- Do not modify or extend the power cable.
- Ensure that the outlet socket is properly grounded, and that the earth pin on the power cord is not damaged or removed from the power plug. For more details on grounding, inquire at an LG Electronics customer information centre.

- This appliance is equipped with a power cord having an equipment-grounding conductor and a grounding power plug. The power plug must be plugged into an appropriate outlet socket that is installed and grounded in accordance with all local codes and ordinances.
- Never start up an appliance showing any signs of damage. If in doubt, consult your dealer.
- Dispose of all packaging materials (such as plastic bags and styrofoam) away from children. The packaging materials can cause suffocation.
- Do not plug the appliance into a multi socket adapter which does not have a power cable (mounted).
- The appliance should be connected to a dedicated power line which is separately fused.
- Do not use a multi socket outlet which is not properly grounded (portable). In case of using a properly-grounded multi socket outlet (portable), use the multi socket outlet with the current capacity of the power cord rating or higher and use the multi socket outlet only for the appliance.

Operation

- Do not use the appliance for any purpose (storage of medical or experimental materials or shipping) other than any domestic household food storage use.
- If water penetrates electrical parts of the appliance, disconnect power plug and contact an LG Electronics customer information centre.
- Unplug the power plug during a severe thunderstorm or lightening or when not in use for a long period of time.
- Do not touch the power plug or the appliance controls with wet hands.
- Do not bend the power cable excessively or place a heavy object on it.
- Immediately unplug the power plug and contact an LG Electronics customer information centre if you detect a strange sound, odour, or smoke coming from the appliance.

- Do not place hands or metallic objects inside the area emitting the cold air, cover or heat releasing grille on the back.
- Do not apply excessive force or impact to the back cover of the appliance.
- Be careful of nearby children when you open or close the appliance door. The door may bump the child and cause injury.
- Avoid the danger of children getting trapped inside the appliance. A child trapped inside the appliance can cause suffocation.
- Do not put animals, such as pets into the appliance.
- Do not place heavy or fragile objects, containers filled with liquid, combustible substances, flammable objects (such as candles, lamps, etc.), or heating devices (such as stoves, heaters, etc.) on the appliance.
- Do not place any electronic appliance (such as heater and mobile phone) inside the appliance.
- If there is a gas leakage (isobutane, propane, natural gas, etc.), do not touch the appliance or power plug and ventilate the area immediately. This appliance uses a refrigerant gas (isobutane, R600a). Although it uses a small amount of the gas, it is still combustible gas. Gas leakage during appliance transport, installation or operation can cause fire, explosion or injury if sparks are caused.
- Do not use or store flammable or combustible substances (ether, benzene, alcohol, chemical, LPG, combustible spray, insecticide, air freshener, cosmetics, etc.) near the appliance.
- This appliance incorporates an earth connection for functional purposes.
- Connect to potable water supply only.
  - If connected to a water supply, connect to a potable water supply only.
- Fill with potable water only.
  - If using an icemaker or dispenser water tank, make sure to fill it with potable water only.

Disposal

- When discarding the appliance, remove the door gasket while leaving the shelves and baskets in place and keep children away from the appliance.

CAUTION

⚠ CAUTION

To reduce the risk of minor injury to persons, malfunction, or damage to the product or property when using this product, follow basic precautions, including the following:

Installation

- After unpacking, check the appliance for any damage that may have occurred during transit.
- Wait for at least 3 to 4 hours in order to ensure the refrigerant circuit is fully efficient.
- This appliance does not require changes in installation or use based on altitude.

Operation

- Do not touch frozen food or the metal parts in the freezer compartment with wet or damp hands. It may cause frostbite.
- Do not place glass containers, bottles or cans (especially those containing carbonated drinks) in the freezer compartment, shelves or ice bin that will be exposed to temperatures below freezing.
- The tempered glass on the front side of the appliance door or the shelves can be damaged by an impact. If it is broken, do not touch it with hands.
- Do not hang from the appliance doors, storage room, shelf or climb up into it.
- Do not store an excessive amount of water bottles or containers for side dishes on the door baskets.

- Do not open or close the appliance door with excessive force.
- If the hinge of the appliance door is damaged or operates improperly, stop using the appliance and contact an authorized service centre.
- Prevent animals from nibbling on the power cable or water hose.
- Never eat frozen foods immediately after they have been taken out in the freezer compartment.
- Make sure not to get a hand or foot stuck upon opening or closing the appliance door or door in door.

Maintenance

- This appliance is equipped with maintenance-free LED interior light. Do not remove cover or LED lamp in any attempt to repair or change it. Contact an LG Electronics customer information centre.
- Do not clean glass shelves or covers with warm water when they are cold. They may shatter if exposed to sudden temperature changes.
- Do not insert the shelves upside down. The shelves may fall.
- To remove frost from the appliance, contact an LG Electronics customer information centre.
- Dispose of the ice inside the ice bin in the freezer compartment during an extended power outage.

INSTALLATION

Before Installation

Dimensions and Clearances

Too small of a distance from adjacent items may result in the degradation of freezing capability and increased electricity costs. Allow over 50 mm of clearance between the back of the appliance and the wall when installing the appliance.

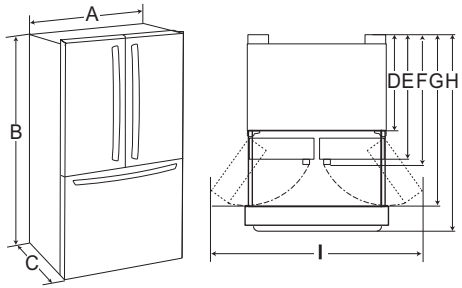

-	Size (mm)		
	Type A	Type B	Type C
A	908	833	908
B	1 772	1 774	1 772
C	921	899	886
D	759	748	724
E	857	845	822
F	921	899	886
G	1 234	1 185	1 199
H	1 461	1 355	1 426
I	1 713	1 490	1 713

NOTE

- You can determine what type of appliance it is by looking at the label inside the appliance.

Ambient Temperature

- The appliance is designed to operate within a limited range of ambient temperatures, depending on the climate zone.
- The internal temperatures could be affected by the location of the appliance, the ambient temperature, the frequency of door opening and so on.
- The climate class can be found on the rating label.

Climate Class	Ambient Temperature Range °C
SN (Extended Temperate)	+10 - +32
N (Temperate)	+16 - +32
ST (Subtropical)	+16 - +38 / +18 - +38**
T (Tropical)	+10 - +43* / +16 - +43 / +18 - +43**

* Australia, India, Kenya

** Argentina

NOTE

- The appliances rated from SN to T are intended to be used at an ambient temperature between 10 °C and 43 °C.

Accessories

*1 This feature is only available on some models.

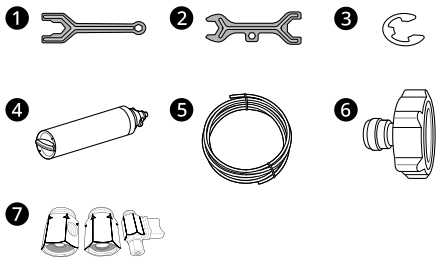

❶ Spanner A*1

❷ Spanner B*1

❸ C-Clip (Snap Ring)*1

❹ Water Filter

❺ Water Tube*1

❻ Tube Connector*1

❼ Tube Connector and Valve*1

Removing the Handle

When moving the appliance through a narrow opening, removing the doors is preferred.

The appearance of the handles may vary from what is shown.

These instructions are for models which ship with the handles assembled. For models shipped with the handles disassembled, follow the instructions included in the handle package.

- Tools Needed
  - Units shipped with assembled handles:

    2.38 mm (3/32 in.), 3.18 mm (1/8 in.), 6.35 mm (1/4 in.) Allen wrenches
  - Units shipped with disassembled handles:

    2.38 mm (3/32 in.), 6.35 mm (1/4 in.) Allen wrenches

⚠ CAUTION

- When removing or refitting the appliance handle, grasp the handle firmly to avoid dropping it.
- Make sure that there is not a gap between the door and handle after assembling the handle.

Removing the Fridge Handle

1 Loosen the set screws ❶ with a 2.38 mm (3/32 in.) Allen wrench and remove the handle.

2 Loosen the mounting fasteners ❷ that connect to the refrigerator door and handle using a 6.35 mm (1/4 in.) Allen wrench, and remove the mounting fasteners.

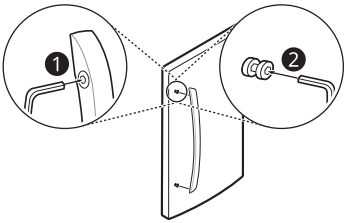

Removing the Freezer Drawer Handle

1 Loosen the set screws ❶ located on the lower side of the handle with a 3.18 mm (1/8 in.) Allen wrench and remove the handle.

- For models shipped with the handles disassembled, use a 2.38 mm (3/32 in.) Allen wrench.

2 Loosen the mounting fasteners ❷ with a 6.35 mm (1/4 in.) Allen wrench, and remove the mounting fasteners.

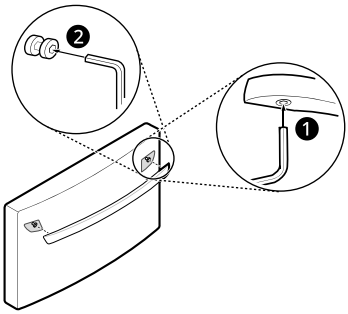

Refitting the Fridge and Drawer Handle

Refit the handle in the reverse sequence of their removal once the appliance has been passed through all access doors.

Removing the Door and Drawer

If your entrance door is too narrow for the appliance to pass through, remove the appliance doors and pass the appliance laterally.

⚠ WARNING

- Disconnect the power cord, house fuse or circuit breaker before installing, removing the doors, or cleaning the appliance. Failure to follow these instructions may result in death, fire or electric shock.

Removing the Left Fridge Door

NOTE

- The number of wire harnesses may vary depending on the model.

1 The water supply is connected to the upper right part of the rear surface of the appliance. Remove the ring in the joint area. Hold the water supply connection and gently push the collet ❶ to detach the water supply line as shown.

- Connections may vary by model.

*1 This feature is only available on some models.

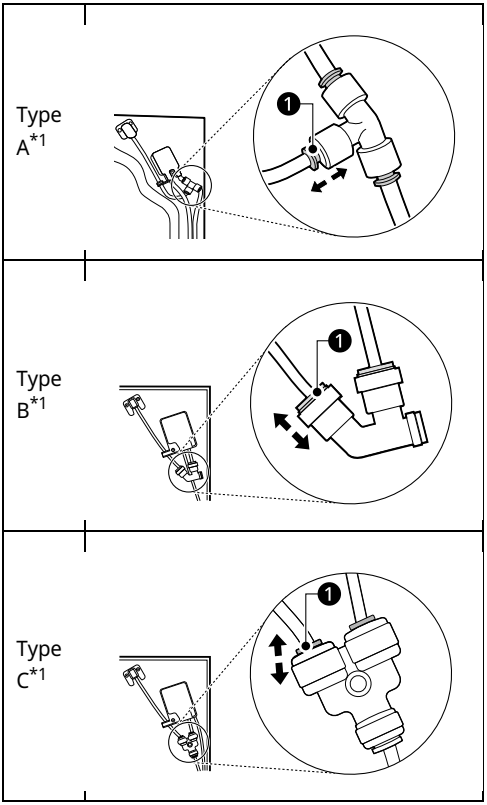

NOTE

- Disassembling/Assembling the Water Lines

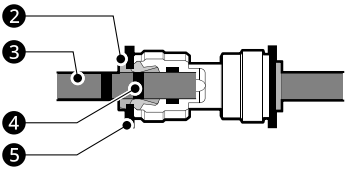

❷ Collet ❸ Tube ❹ Insert line ❺ Clip

2 Remove the screw ❻ from the hinge cover at the top of the appliance. Lift the hook (not visible), located at the bottom of the front side of the cover ❼ with a flat-head screwdriver.

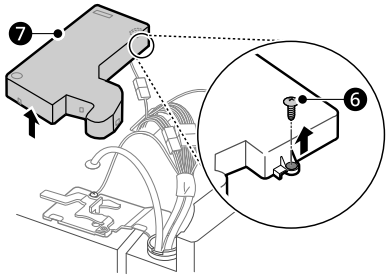

3 Remove the cover and pull out the tube ❽. Disconnect all wire harnesses ❾. Unscrew the earth wire ❿.

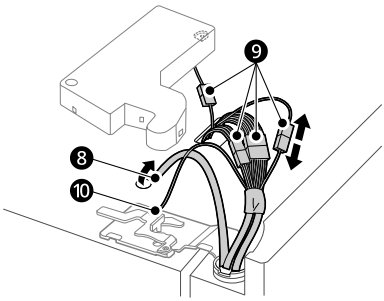

4 Rotate the hinge lever ⓫ counterclockwise. Lift the top hinge ⓬ free of the hinge lever latch ⓭.

⚠ CAUTION

- When lifting the hinge free of the latch, be careful that the door does not fall forward.

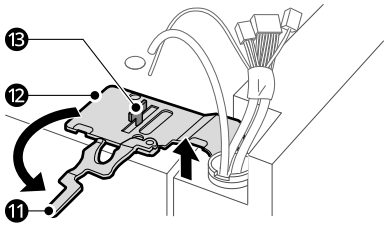

5 Lift the door from the middle hinge pin and remove the door.

⚠ CAUTION

- Place the door, inside facing up, on a nonscratching surface.

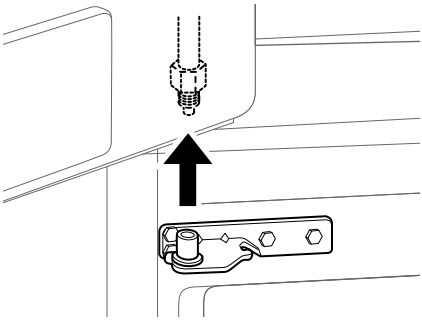

Removing the Right Fridge Door

NOTE

- The number of wire harnesses may vary depending on the model.
- Earth wire is only present on some models.

1 Remove the top hinge cover screw ❶. Lift the hook (not visible), located at the bottom of the

front side of the cover ❷, with a flat-head screwdriver. Remove the cover.

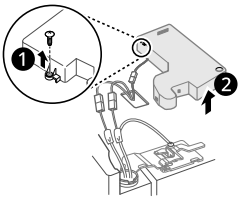

2 Detach all the wire harnesses ❸. Unscrew the earth wire ❹.

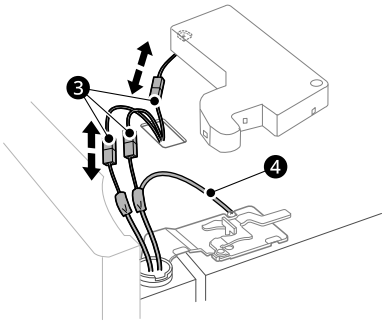

3 Rotate the hinge lever ❺ clockwise. Lift the top hinge ❻ free of the hinge lever latch ❼.

⚠ CAUTION

- When lifting the hinge free of the latch, be careful that the door does not fall forward.

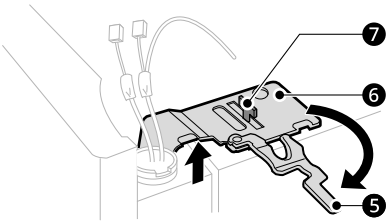

4 Lift the door from the middle hinge pin and remove the door.

⚠ CAUTION

- Place the door, inside facing up, on a nonscratching surface.

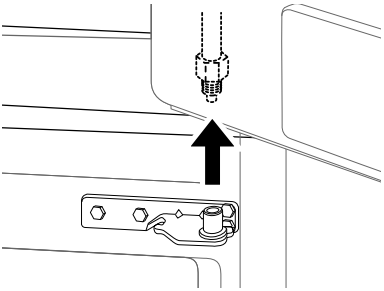

Removing the Freezer Drawer

⚠ WARNING

- To prevent accidents, keep children and pets away from the drawer. Do not leave the drawer open.

⚠ CAUTION

- Do not sit or stand on the freezer drawer.
- When you lay the drawer down, be careful not to damage the floor.
- Be careful of sharp hinges on both sides of the drawer.
- Use two or more people to remove and install the fridge doors and freezer drawer.

1 Pull the drawer open to full extension.

2 Gently lift and pull out the ice bin.

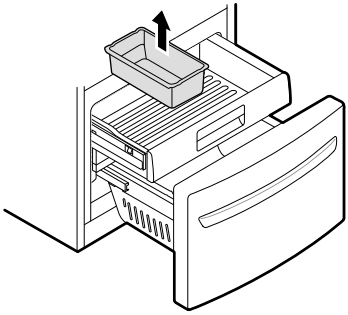

3 Lift the front of the drawer up, then pull it straight out.

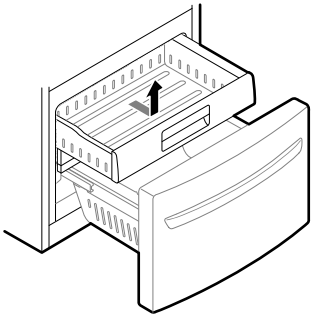

4 Remove the Durabase basket from the rails. Remove the screws from the rails at both ends.

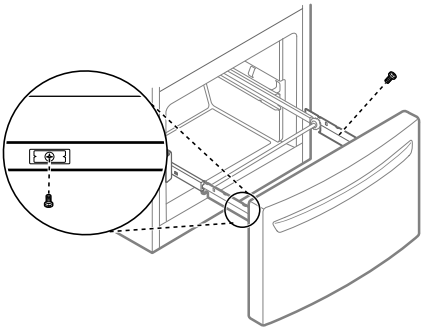

5 Grip both sides of the drawer and pull it up to remove it from the rails.

⚠ CAUTION

- Do not hold the handle when removing or replacing the drawer. The handle may come off, causing personal injury.

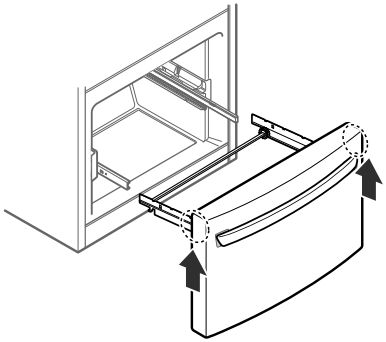

6 Hold both rails and push them in simultaneously.

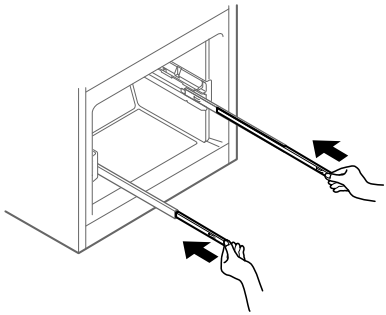

Refitting the Door and Drawer

Refit the door and drawer in the reverse sequence of their removal once the appliance has been passed through all access doors.

Connecting the Water Line

This feature is only available on some models.

Water Supply Requirements

A cold water supply with water pressure between 138 kPa and 827 kPa (1.4-8.4 kgf/cm^2) is required to operate the water dispenser. If the refrigerator is installed in an area with low water pressure (below 138 kPa), you can install a booster pump to compensate for the low pressure.

If a reverse osmosis water filtration system is connected to your cold water supply, the water pressure to the reverse osmosis system needs to be a minimum of 138 kPa to 827 kPa (1.4-8.4 kgf/cm^2)

⚠ WARNING

- Unplug the appliance before carrying out any work on connecting the water line. Failure to do so may cause electric shock.
- Only connect the water line to a cold water supply. Failure to do so may cause the water filter to malfunction. Water hammer (water banging in the pipes) in house plumbing can cause damage to appliance parts and can lead to water leakage or flooding.
- Connect to potable water supply only.
- Use a new hose when connecting water to the appliance. Do not use old, worn or used hoses.
- Connecting the water line must only be installed by a qualified plumber and in accordance with local legislation and regulations governing water quality.

NOTE

- This water line installation is not covered by the appliance warranty.

Connecting Water to the Appliance

1 Unscrew the metal threaded collar nut at the back of the appliance and place it over one end of the water tube.

2 Firmly push the water tube onto the water inlet valve and tighten up the collar nut.

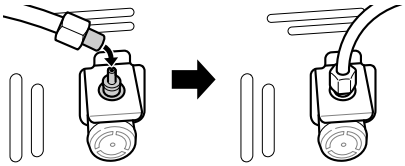

Connecting to the Water Tap

This feature is only available on some models.

1 Push the water tube into the hole of the tap connector supplied in the accessories. The pipe should be held firmly whilst the connector is pushed onto the pipe.

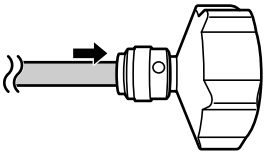

2 Ensure that the rubber washer is fitted to the inside of the tap connector before screwing it onto the tap.

- A separate connector or adaptor may need to be purchased if your tap fitting does not

match the thread size of the connector provided.

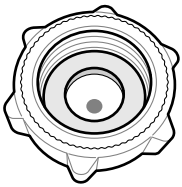

Checking the Water Connection

1 Turn on the water supply and switch on the appliance. Carefully check all fittings for possible leaks due to poorly fitted hoses.

2 Press and hold the **Water Filter** button for three seconds. The new water filter has been activated.

3 Place a cup under the water dispenser to verify that water is flowing through the appliance.

4 Check the connecting tube and joints for leaks once again.

Levelling and Door Alignment

Levelling the Appliance

The appliance has two front levelling legs. Adjust the legs to alter the tilt from front-to-back or side-to-side. If the appliance seems unsteady, or the doors do not close easily, adjust the appliance’s tilt using the instructions below:

1 Turn the levelling leg to the left to raise that side of the appliance or to the right to lower it. It may take several turns of the levelling leg to adjust the tilt of the appliance.

NOTE

- A flare nut wrench works best, but an open-end wrench will suffice. Do not over-tighten.

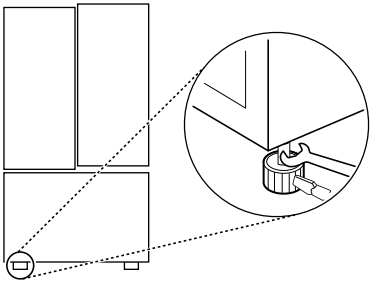

2 Open both doors and check to make sure that they close easily. If the doors do not close easily, tilt the appliance slightly more to the rear by turning both levelling legs to the left. It may take several more turns, and be sure to turn both levelling legs the same amount.

Door Alignment (Standard Door Model)

Both the left and right fridge doors have an adjustable nut, located on the bottom hinge, to raise and lower them to align properly.

If the space between the doors is uneven even after the door bins are filled, follow the instructions below to align the doors evenly:

Use the spanner (included with the owner's manual) to turn the nut in the door hinge to adjust

the height. Turn the nut to the right to raise the door or to the left to lower it.

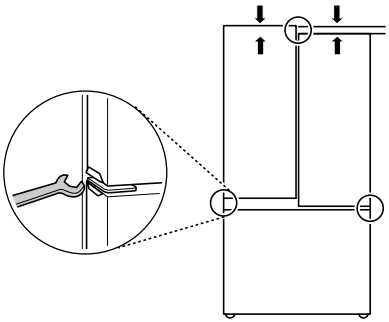

Door Alignment (Door-in-Door Model)

Left Fridge Door

The left fridge door has an adjustable nut, located on the bottom hinge, to raise and lower the door for proper alignment.

If the space between the doors is uneven, follow the instructions below to align the left door:

Use the wrench (included with the owner's manual) to turn the nut in the door hinge to adjust the height. Turn the nut to the right to raise the door or to the left to lower it.

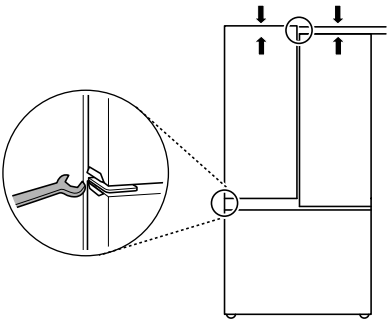

Right Fridge Door

The right fridge door does not have an adjustable nut.

If the space between the doors is uneven, follow the instructions below to align the right door:

1. With one hand, lift up both the inner and outer door sections of the right door to raise them at the middle hinge. (It may be easier to lift it with the doors open.)

2. With the other hand, use pliers to insert the snap ring on the middle hinge of the inner door section as shown. Do not insert the ring on the hinge of the outer door section.

3. Insert additional snap rings until the right door is aligned. (Two snap rings are provided with the unit.)

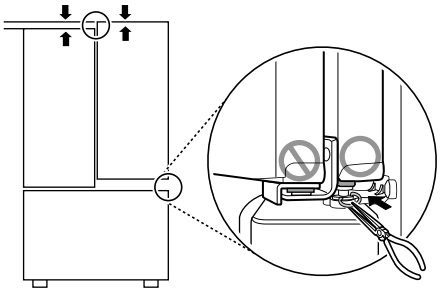

Turning on the Power

Connecting the Appliance

To turn on the appliance, connect the power plug into the outlet socket. Do not double up with other appliances on the same outlet.

NOTE

- After connecting the power supply cord (or plug) to the outlet, wait 3 or 4 hours before you put food into the appliance. If you add food before the appliance has cooled completely, your food may spoil.
- To turn off the appliance, disconnect the power plug from the outlet socket.

Moving the Appliance for Relocation

Moving the Appliance

1 Remove all food from inside the appliance.

2 Pull the power plug out, insert and fix it into the power plug hook at the rear or on top of the appliance.

3 Tape parts such as shelves and the door handle to prevent from falling off while moving the appliance.

4 Move the appliance with more than two people carefully. When transporting the appliance over a long distance, keep the appliance upright.

5 After installing the appliance, connect the power plug into a mains outlet socket and switch it on.

OPERATION

Before Use

Notes for Operation

- Users should keep in mind that frost can form if the door is not closed completely or if the humidity is high during the summer.
- Ensure there is sufficient space between food stored on the shelf or door basket to allow the door to close completely.
- Opening the door for long periods can cause a significant increase of the temperature in the compartments of the appliance.
- If the refrigerating appliance is left empty for long periods, switch off, defrost, clean, dry, and leave the door open to prevent mould developing within the appliance.
- Note that a temperature rise after defrosting has a permissible range in the appliance specifications. If you wish to minimise the impact on the food storage due to a temperature rise, seal or wrap the stored food in several layers.

Door Open Alarm

This feature is only available on some models.

The alarm sounds if the door is left open or not completely closed. The door alarm feature cannot be disabled.

NOTE

- Contact the LG Electronics customer information centre if the alarm sound continues even after closing all doors.

Failure Detection

The appliance can automatically detect problems during the operation.

NOTE

- If a problem is detected, the appliance may not operate and an error code is displayed even when any button is pressed.
- If an error code is indicated on the display, do not turn off the power. Immediately contact the LG Electronics customer information centre and report the error code. If you turn off the power, the repair technician from the our information centre may have difficulty finding the problem.

Suggestion for Energy Saving

- For the most efficient use of energy, keep all inner parts (e.g. door bins, drawers and shelves) on their original location.
- Ensure there is sufficient space between stored foods. This allows cold air to be circulated evenly and lowers electricity bills.
- Store hot food only after it has cooled in order to prevent dew or frost.
- When storing food in the freezer compartment, set the freezer temperature lower than the temperature indicated on the food.
- Do not set the temperature of the appliance lower than needed.
- Do not put food near the temperature sensor of the fridge compartment. Keep a distance of at least 3 cm from the sensor.

Storing Foods Effectively

- Food may freeze or spoil if stored at the wrong temperature. Set the refrigerator to the correct temperature for the food being stored.
- Store frozen food or refrigerated food inside sealed containers.
- Check the expiration date and label (storage instructions) before storing food in the appliance.

- Do not store food for a long period of time if it spoils easily at a low temperature.
- Do not place unfrozen food in direct contact with food that is already frozen. It could be necessary to reduce the quantity to be frozen if freezing every day is anticipated.
- Place the refrigerated food or frozen food in each fridge or freezer compartment immediately after purchasing.
- Store raw meat and fish in suitable containers in the refrigerator, so that it is not in contact with or drip onto other food.
- Refrigerated foods and other food items can be stored on top of the vegetable drawer.
- Avoid refreezing any food which has been completely thawed. Freezing any food which has been completely thawed again will lower its taste and nutrition.
- Do not overfill the appliance. Cold air can not circulate properly if the appliance is overfilled.
- Cool hot food before storing. If too much hot food is placed inside, the internal temperature of the appliance can increase and negatively affect other foods stored in the appliance.
- If you set an excessively low temperature for food, it may become frozen. Do not set a temperature lower than the required temperature for the food to be stored correctly.
- If there are chill compartments in the appliance, do not store vegetables and fruits with higher moisture content in the chill compartments as they may freeze due to the lower temperature.
- In the event of a blackout, call the electricity company and ask how long it is going to last.
  - You should avoid door openings while the power is off.
  - When the power supply gets back to normal, check the condition of the food.

Maximum Freezing Capacity

- **Express Frz.** function will allow the freezer to reach its maximum freezing capacity. This generally takes up to 24 hours and automatically switches off.
- **Express Frz.** must be switched on for 7 hours before fresh products are placed in the freezer compartment.
- To get better air circulation, insert all inner parts like baskets, drawers, and shelves.

Product Features

The appearance or components of the appliance may differ from model to model.

Exterior

*1 This feature is only available on some models.

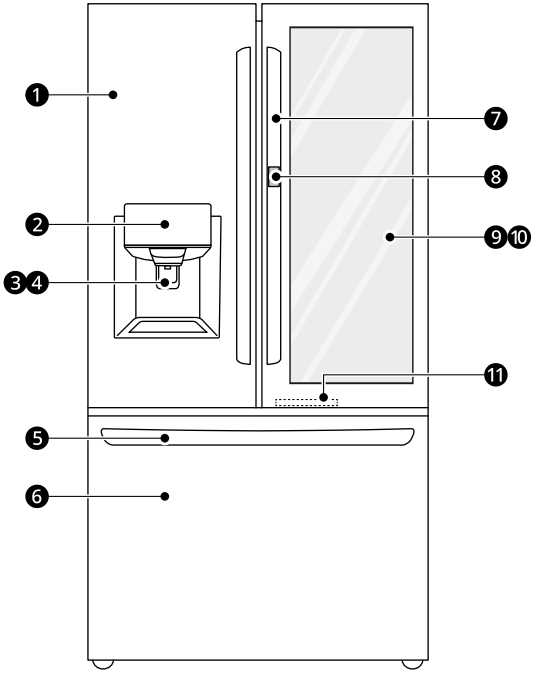

❶ **Fridge**

Fresh food compartment

❷ **Dispenser Control Panel***1

Sets the the dispenser mode.

❸ **Water Dispenser***1

Dispenses purified water.

❹ **Filtered Water and Ice Dispenser***1

Dispenses purified water and ice.

❺ **Freezer Handle**

Opens and closes the freezer drawer.

❻ **Freezer**

Frozen food compartment

❼ **Fridge Handle**

Opens and closes the fridge door.

❽ **Door Button***1

Opens the **Door in Door** Compartment.

❾ **Door in Door***1

The **Door in Door** is a double layered door system. It can be opened individually or together with the main door. You can conveniently locate and access your favourite snacks or food items.

❿ **InstaView Door in Door***1

The **InstaView Door in Door** compartment allows for easy access to commonly used food items.

⓫ **LED Light***1

LED lights up when the freezer drawer is opened.

Interior

*1 This feature is only available on some models.

Standard Door Model:

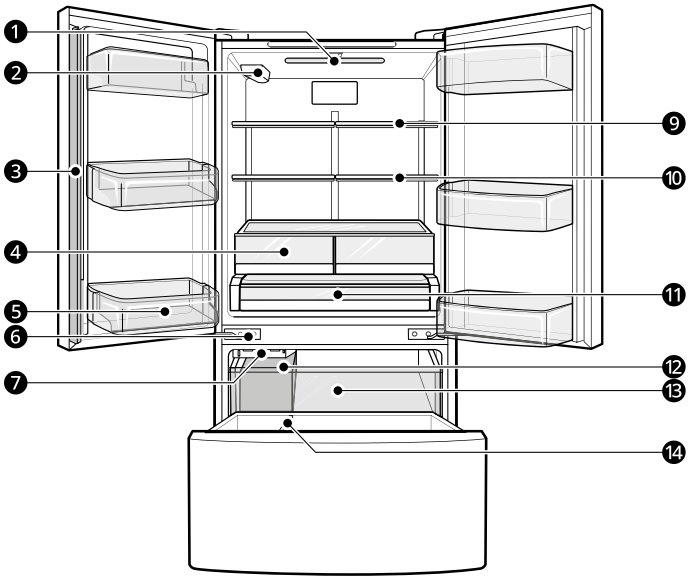

InstaView Door Model:

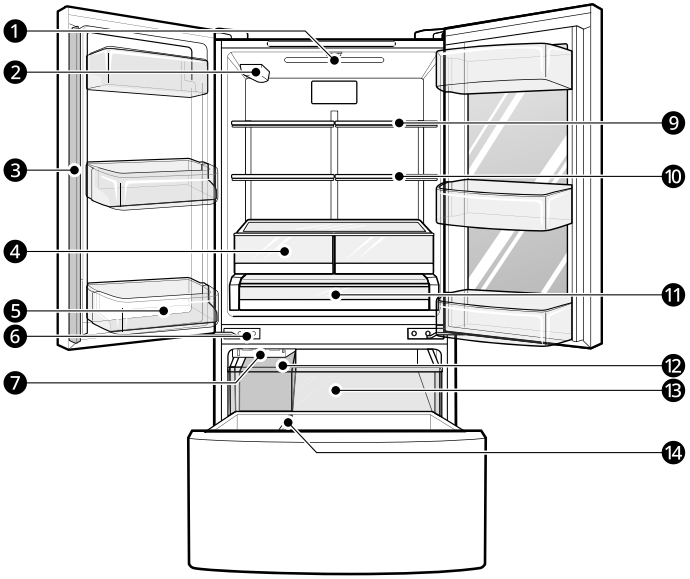

Door in Door Model / InstaView Door in Door Model:

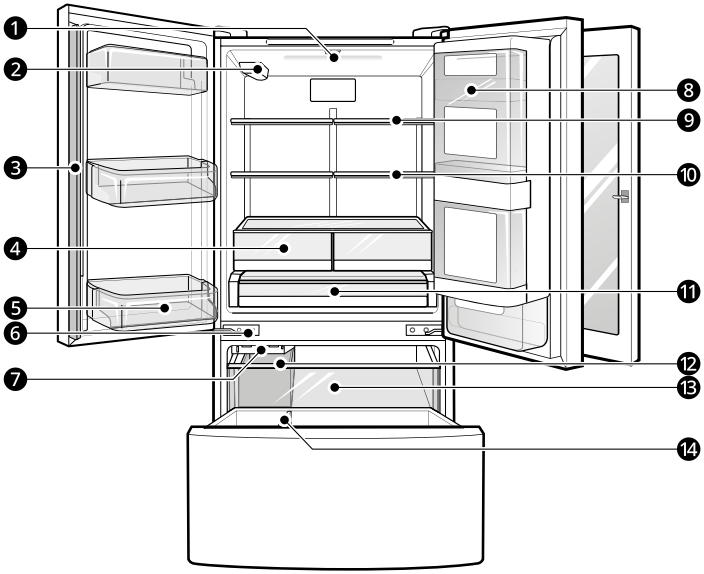

❶ **LED Interior Lighting**

Lights up the inside of the fridge.

❷ **Water Filter**[*1]

Purifies water.

Replace the water filter every six months. See the Replacing the Water Filter section in this manual for details.

❸ **Door Mullion**

Prevents the cold air of the fridge from leaking.

⚠ CAUTION

- To reduce the risk of scratching the door or breaking the center door mullion, make sure that the refrigerator door mullion is always folded in.

❹ **Humidity Controlled Crisper**

Helps vegetables and fruit to stay crisp and controls humidity.

❺ **Fixed Door Bin**

Store chilled food or drinks.

❻ **Auto-Closing Hinge**

The appliance doors and freezer drawer close automatically when pushed slightly. (The door only closes automatically when it is open at an angle of less than 30°.)

❼ **Automatic Icemaker (Freezer)**[*1]

Produces and stores ice automatically in the freezer compartment.

❽ **Door in Door Compartment**[*1]

A convenient storage area for frequently-used items that require easy access.

❾ **Adjustable Fridge Shelf**

The fridge shelves are adjustable to meet individual storage needs

❿ **Folding Shelf**

Shelf is adjustable to meet individual storage needs.

⓫ **Glide'N'Serve**[*1]

Store food items at a different temperature than the regular fridge area.

⓬ **Ice Bin**

Stores ice produced by the automatic icemaker.

⓭ **Pullout Drawer**

Provides extra storage within the freezer compartment.

⓮ **Durabase and Durabase Divider**

Provides storage for large food items.

Control Panel

The actual control panel may differ from model to model.

Control Panel and Functions

*1 This feature is only available on some models.

Type A

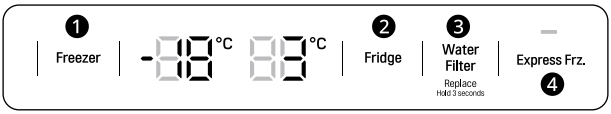

Type B

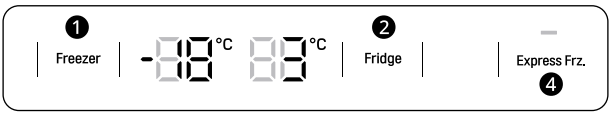

Type C

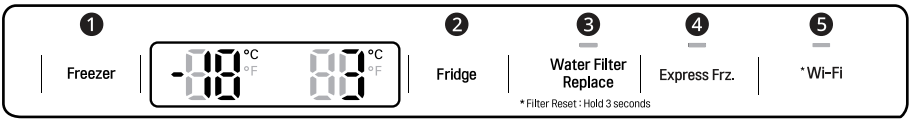

Type D

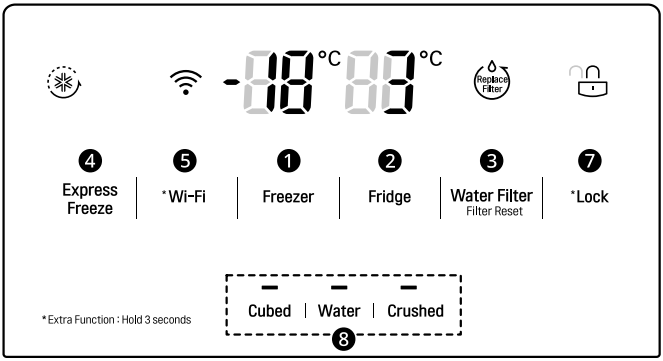

Type E

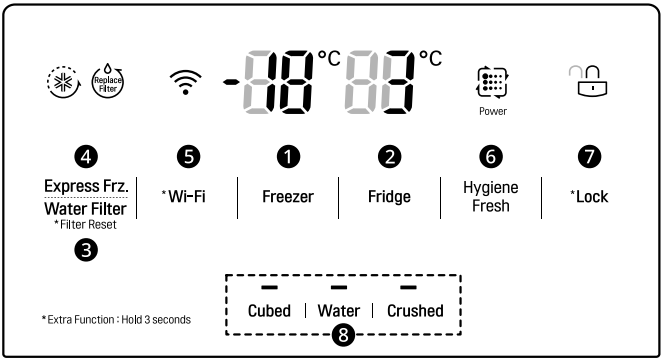

❶ **Freezer**

Press this button repeatedly to select a desired temperature between -23 ℃ and -15 ℃ or -21 ℃ to -13 ℃.

- The initial freezer temperature is -18 ℃.

NOTE

- **Craft Ice**
  - This feature is only available on some models.
  - The **Freezer** button can also be used to set the **Craft Ice** mode to either **3 ICE** or **6 ICE**.
  - For more ice, select the **6 ICE** mode. For clearer ice, select the **3 ICE** mode.
  - To change the **Craft Ice** mode:
    1) Press and hold the **Freezer** button for 3 seconds until the control panel beeps and the current mode appears.
    2) Press the **Freezer** button repeatedly to toggle between **3 ICE** and **6 ICE** modes.
    3) After 5 seconds of idle time, the last mode set will be saved, and the display will return to normal.

❷ **Fridge**

Press this button repeatedly to select a desired temperature between 1 ℃ and 7 ℃.

- The initial fridge temperature is 3 ℃.

❸ **Water Filter / Water Filter Replace**[*1]

Replace the water filter when the **Water Filter / Water Filter Replace** indicator turns on. After replacing the water filter, press and hold the **Water Filter / Water Filter Replace** button for three seconds to turn the indicator light off. Replace the water filter approximately every six months.

❹ **Express Frz. / Express Freeze**

This function can quickly freeze a large amount of ice or frozen foods.

- This function is enabled and disabled in turn each time you press the button.
- This function automatically terminates after a specific period has passed.

❺ **Wi-Fi**[*1]

- This button allows the appliance to connect to a home Wi-Fi network. Refer to Smart Functions for information on the initial setup of the **LG ThinQ** application.

❻ **Hygiene Fresh**

This function reduces odours inside the fridge.

❼ **Lock**

This locks buttons on the control panel.

- To lock the control panel buttons, press and hold the **Lock** button for 3 seconds until the icon appears and the function is activated.
- To disable the function, press and hold the **Lock** button for 3 seconds until the icon appears and the function is deactivated.

NOTE

- The Lock function does not disable the dispenser operation.

❽ **Water & Ice Type**

Select a desired dispenser mode from the buttons on the control panel. Press the dispenser switch with a glass or other container to dispense cubed ice, water or crushed ice.

NOTE

- For optimal food preservation, increasing or decreasing 1 °C from the default temperature is recommended for each compartment.
- The displayed temperature is the target temperature, and not the actual temperature inside the appliance.
- The actual temperature inside the appliance depends on the following factors: room temperature, the amount of food and how often the doors are opened, where the appliance is. Set the temperatures by considering these factors.
- The control panel automatically turns off for energy saving.
- When the appliance is in the energy saving mode, the display remains off until a door is opened or a button is pressed. Once on, the display remains on for 20 seconds.
- If there is any finger or skin contacts to the control panel while cleaning it, the button function may operate.
- This appliance incorporates an earth connection for functional purposes only.

Water Dispenser

This feature is only available on some models.

Before Using the Water Dispenser

⚠ CAUTION

- Keep children away from the dispenser to prevent children playing with or damaging the controls.

- If water dispenses unexpectedly, turn off the water supply and contact an LG Electronics Customer Information Centre.

NOTE

- The first water dispensed may include particles or odour from the water supply line or the water tank. This is also necessary if the appliance has not been used for a long time.
- If the cup rim is small, water may splash out of the glass or miss it completely.

Using the Water Dispenser

Press the dispenser paddle ❶ with a glass or other container to dispense water.

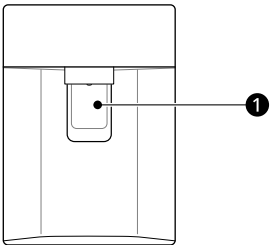

Cleaning the Water Outlet

Wipe the water outlet ❷ frequently with a clean, lint free cloth as it may get dirty easily.

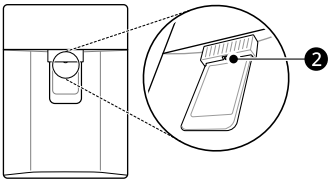

NOTE

- Lint from a cloth may adhere to the outlets.

Cleaning the Dispenser Tray

Wipe the entire area with a damp cloth. The dispenser tray may become wet easily due to spilled water.

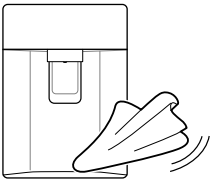

Ice and Water Dispenser

This feature is only available on some models.

Before Using the Ice and Water Dispenser

⚠ CAUTION

- Keep children away from the dispenser to prevent children playing with or damaging the controls.
- Throw away the first few batches of ice (about 20 cubes and 7 cups of water). This is also necessary if the appliance has not been used for a long time.
- Clean the water dispensing system if they have not been used for 48 hours. Flush the water system connected to a water supply if water has not been drawn for 5 days.
- To clean the water dispensing system, flush the water through the dispenser about 5 minutes and throw away the first few batches of ice.
- Do not use a thin crystal cup or chinaware when dispensing water or ice.

NOTE

- If you open the fridge door while water, cubed ice or crushed ice is being dispensed, dispensing will be paused. When you close the door, the selected item will continue to be dispensed.
- If the cup rim is small, water may splash out of the glass or miss it completely.

NOTE

- Use a cup with a rim of over 68 mm in diameter when dispensing water, cubed ice or crushed ice.
- When the ice maker produces smaller ice cubes, or the cubes become lumped together, the amount of water supplied to the ice maker may be low due to insufficient water in the water tank. If ice is not used frequently or the freezer set temperature is too warm, it may also lump together.
- It is normal for milky / cloudy water to be dispensed after replacing the water filter. This air in the water will eventually clear and is safe to drink during this transition.

Using the Ice and Water Dispenser

Press the dispenser selection button repeatedly until the light above the icon that you want illuminates.

Press the dispenser paddle ❶ with a glass or other container to dispense cubed ice, water or crushed ice.

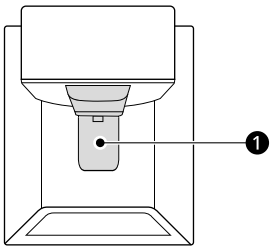

Cleaning the Dispenser

Cleaning the Ice and Water Outlet

Wipe the water outlet ❶ or ice outlet ❷ frequently with a clean cloth as it may get dirty easily.

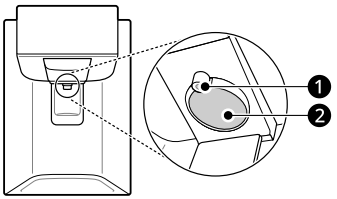

NOTE

- Lint from a cloth may adhere to the outlets.

Cleaning the Dispenser Tray

Wipe the entire area with a damp cloth. The dispenser tray may become wet easily due to spilled ice or water.

Automatic Icemaker

This feature is only available on some models.

This feature may vary depending on model purchased.

Before Using the In-Door Icemaker

- The icemaker produces ice normally when approximately 48 hours have passed after the appliance is initially installed.
- If the ice bin is completely filled with ice, ice production will stop.
- Sound of ice dropping into the ice bin is normal.

- If ice cubes are stored in the ice bin for a long period of time, they may clump together and may not be separated easily. In such a case, empty the ice bin and allow fresh ice to be made.

⚠ CAUTION

- It is normal for milky or cloudy water to be dispensed after replacing the water filter. This air in the water will clear eventually and is safe to drink.
- The first ice and water dispensed may include particles or odour from the water supply line or the water tank.
- If discolored ice is dispensed, check the water tank and the water supply for a possible source. If the problem continues, contact the LG Electronics customer information centre. Do not use the ice or water until the problem is corrected.
- Do not touch the ice outlet or the automatic icemaker with your hand or a tool.
- Dispense ice into a glass before filling it with water or other beverages. Splashing will occur if ice is dispensed into a glass that already contains liquid.
- Never use a glass that is exceptionally narrow or deep. Ice may jam in the ice passage, affecting the performance of the appliance.
- Keep the glass at a proper distance from the ice outlet. A glass held too close to the outlet may prevent ice from dispensing.
- Dispose of the ice inside the ice bin if you go on vacation or if an extended power outage occurs. Water from melting ice may drop from the dispenser onto the floor.
- A container with a very small opening should be held as close to the dispenser as possible to avoid spilling.

In-Door Icemaker

The automatic icemaker can automatically make 70 - 182 cubes within a 24-hour period if conditions are favourable. This amount may vary according to the environment (ambient temperature around the appliance, frequency of the door being opened, amount of food stored in the appliance, etc.).

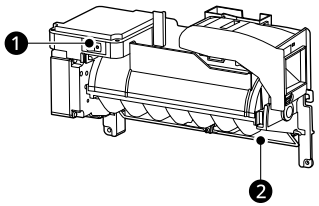

❶ Power Switch

❷ Auto Shutoff (feeler arm)

Before Using the Freezer Icemaker

NOTE

- The icemaker begins producing ice approximately 48 hours after the appliance is initially installed.
- Throw away the first few batches of ice after installation.
- The sound of ice dropping into the ice bin is normal.
- If the ice bin is completely filled with ice, ice production will stop.
- The amount and shape of ice may vary according to the environment (ambient temperature around the appliance, frequency of the door being opened, amount of food stored in the appliance, water pressure, etc.).
- In the event of a power outage, throw away the ice stored in the ice bin.

Freezer Icemaker (Cubed Ice)

This feature is only available on some models.

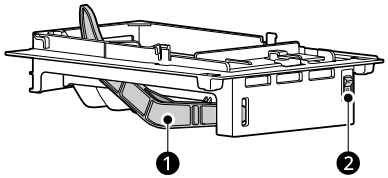

❶ Feeler Arm

❷ Power Switch

NOTE

- This automatic freezer icemaker produces 12 cubes at a time, 50-110 pieces within a 24 hour period if conditions are favorable. This amount may vary according to the environment (ambient temperature around the appliance, frequency of the door being opened, amount of food stored in the appliance, etc.).
- Ice cubes which are stored in the ice bin for a long time may clump together and be difficult to separate. If this happens, empty the ice bin completely and clean it before reinstalling it.

Freezer Icemaker (Craft Ice™)

This feature is only available on some models.

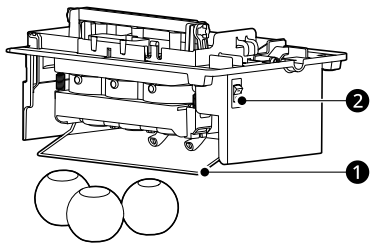

❶ Feeler Arm

❷ Power Switch

⚠ CAUTION

- Do not insert round ice into the in-door ice bin, as it can damage the ice and water dispenser.

NOTE

- The icemaker begins producing ice approximately 48 hours after the appliance is initially installed. The first batches of ice may not be round and clear.
- Following installation or water filter replacement, the first few batches of ice may be semicircular or contain air bubbles.
- If the water pressure is less than 20 psi (138 kPa) or a reverse osmosis system is used, the shape of the ice may vary.
- The ice may look cloudy depending on the water quality in the installation location and the operating conditions.
- Throw away any shards of ice you may find in the ice bin, as they may stick to the ice stored in the ice bin.
- After a short-term power outage, it will take longer to make the first batch of ice, and the ice may not be round. If the power will be out for a longer period, throw away the ice stored in the ice bin.
- The **Craft Ice** icemaker produces 1 batch of round ice (3 pieces) at a time.
- In **3 ICE** mode, the **Craft Ice** icemaker produces 1 batch of round ice (3 pieces) about every 24 hours. In **6 ICE** mode, the **Craft Ice** icemaker produces 2 batches of round ice (6 pieces total) in the same period.
- For more ice, select the **6 ICE** mode. For clearer ice, select the **3 ICE** mode.
- The time needed to make ice may vary according to operating conditions.
- The ice bin stores 20 - 30 pieces of round ice.

Turning the Icemaker On/Off

To turn the automatic icemaker On/Off, press the power switch on the icemaker to the ON (|) or OFF (O) position.

⚠ CAUTION

- Do not keep the power turned on to the icemaker if the water line is not connected. Doing so can damage the icemaker.

Normal Sounds You May Hear

The icemaker water valve will buzz as the icemaker fills with water. If the power switch is in the ON (|) position, it will buzz even if it has not yet been hooked up to water. To stop the buzzing, move the power switch to OFF (O).

Preparing for Vacation

If the ambient temperature will drop below freezing, have a qualified technician drain the water supply system to prevent serious property damage due to flooding caused by ruptured water lines or connections. Set the icemaker power switch to OFF (O) and shut off the water supply to the appliance.

NOTE

- The ice bin should be emptied any time the icemaker on/off switch is turned to the OFF (O) position.

InstaView

This feature is only available on some models.

Using the InstaView Door in Door

The **InstaView** function on the **Door in Door** lets you see if you're running low on frequently used items like beverages and snacks, without opening the fridge door.

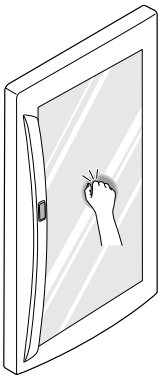

1 Knock twice on the glass to turn the LED light inside the **Door in Door** on or off.

2 The LED light turns off automatically after ten seconds.

⚠ CAUTION

- Do not open the door of the appliance with the door in door open, or do not open the door in door while the door of the appliance is open. The door in door may be struck by the edge of the appliance and damaged.

NOTE

- The **InstaView Door in Door** function is disabled for 2 seconds after closing the left or right freezer door.
- Knock near the center of the glass. Knocking near the edges of the glass may not activate the **InstaView Door in Door** function.
- Knock hard enough so that the knocking sound is audible.
- The **InstaView Door in Door**function may activate if a loud noise occurs near the refrigerator.

NOTE

- Clean the glass door with a dry cloth. To remove stubborn stains, slightly moisten a clean cloth with lukewarm water or a glass cleaner. Do not spray glass cleaner directly at the glass door.

Door in Door

This feature is only available on some models.

Using the Door in Door

The **Door in Door** compartment allows for easy access to commonly used food items.

To access the **Door in Door** compartment, lightly press the button on the right fridge door handle.

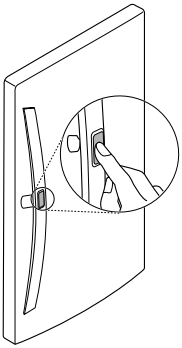

Removing/Refitting the Door in Door Bin

The Door in Door inner and outer door bins are removable for easy cleaning.

1 To remove the door bins, lift up and pull out.

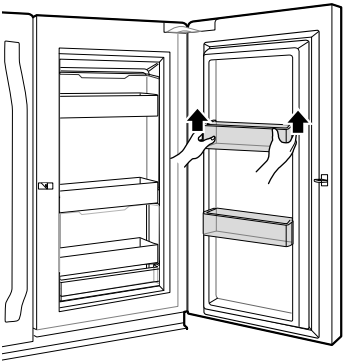

2 To refit the door bins, slide the door bin in above the desired support and push down until it snaps into place.

Removing/Refitting the Door in Door Case

To open the Door in Door case, press on the area marked **Pull to open**. The case is removable for easy cleaning and adjustment.

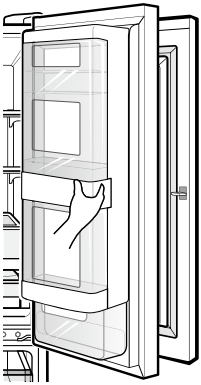

1 To remove the case, lift up and pull out.

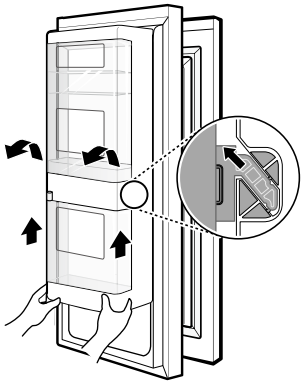

2 To refit the case, line up the tabs on the case with the slots on the door and push down until it snaps into place.

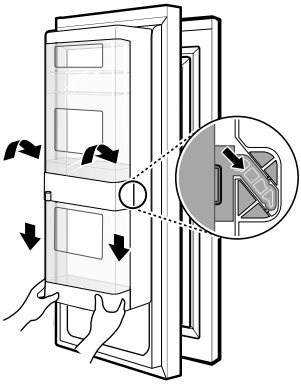

Humidity Controlled Crispers

Using the Humidity Controlled Crispers

This feature is only available on some models.

The crispers provide fresher tasting fruit and vegetables by letting you easily control humidity inside the drawer.

You can control the amount of humidity in the moisture-sealed crispers by adjusting the control to any setting between **Vegetables** and **Fruit**.

- **Vegetables** keeps moist air in the crisper for best storage of fresh, leafy vegetables.
- **Fruit** lets moist air out of the crisper for best storage of fruit.

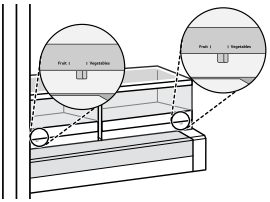

Removing/Refitting the Humidity Controlled Crispers

1 Open the doors completely and remove the contents of the Door-in-Door case. Lift up and pull out the Door-in-Door case.

NOTE

- The Door-in-Door feature is only available on some models.

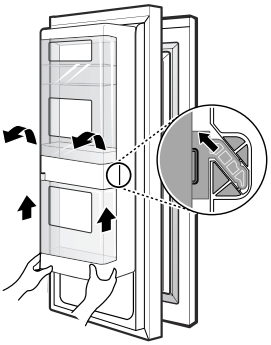

2 Pull out the crisper to full extension, lift the front up, and pull straight out.

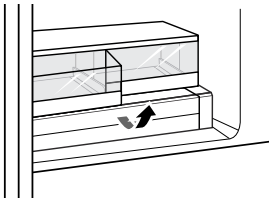

3 Lift the front of the cover up with both hands until it detaches from the back wall of the cabinet, then pull it out.

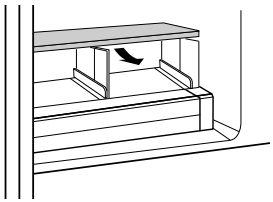

4 To refit, insert the cover into the refrigerator with both hands and lower it onto the guides.

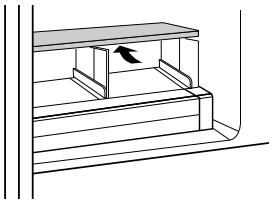

5 Slightly tilt up the front, insert the crisper into the frame and push it back into place.

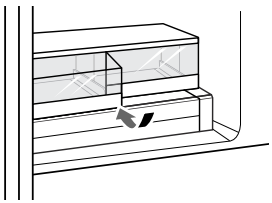

6 Line up the tabs on the Door-in-Door case with the slots on the door and push down until it snaps into place.

NOTE

- The Door-in-Door feature is only available on some models.

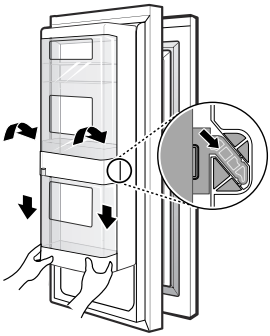

Glide'N'Serve

Using the Glide'N'Serve

This drawer can be used for large party trays, deli items and beverages. This drawer should not be used to store vegetables that require high humidity.

Press the **Select** button to choose between **Produce** (Cold), **Deli** (Colder) and **Meat** (Coldest).

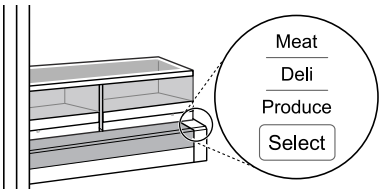

⚠ CAUTION

- Do not place any items on the Glide'N'Serve cover.

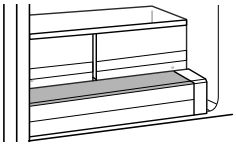

Removing/Refitting the Glide‘N’Serve

1 To remove the Glide'N'Serve, pull out the Glide'N'Serve to full extension, lift the front up, and pull straight out.

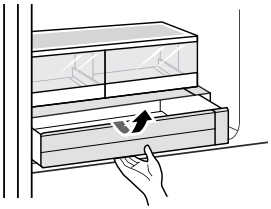

2 To refit, slightly tilt up the front, insert the Glide'N'Serve into the frame and push it back into place.

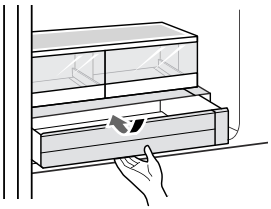

Shelf

⚠ CAUTION

- Glass shelves are heavy. Use special care when removing them.
- Do not clean glass shelves with warm water while they are cold. Shelves may break if exposed to sudden temperature changes or impact.

Using the Folding Shelf

This feature is only available on some models.

Store taller items, such as a gallon container or bottles, by pushing the front half of the shelf underneath the back half of the shelf. Pull the front of the shelf forward to return to a full shelf.

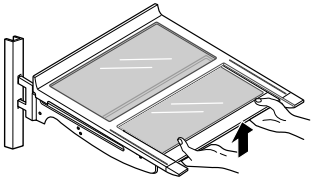

Door Basket

Removing/Refitting the Door Basket

⚠ CAUTION

- Regularly detach and wash the door baskets; they can become easily contaminated by food.

The door baskets are removable for easy cleaning and adjustment.

1 To remove the baskets, simply lift the basket up and pull straight out.

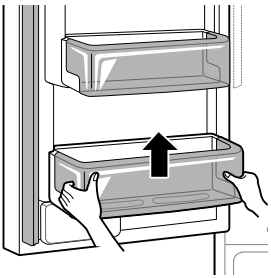

2 To assemble the baskets, slide it in above the desired support and push down until it snaps into place.

Durabase

Using the Durabase

⚠ CAUTION

- If the **Durabase** divider is removed, there is enough open space for children or pets to crawl inside. To prevent accidental child and pet entrapment or suffocation risk, DO NOT allow children or pets to touch or go near the drawer.

The **Durabase** divider allows you to organize the **Durabase** area into 2 sections. It can be adjusted from side to side to accommodate items of different sizes.

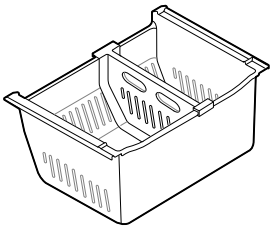

SMART FUNCTIONS

LG ThinQ Application

This feature is only available on models with Wi-Fi.

The **LG ThinQ** application allows you to communicate with the appliance using a smartphone.

LG ThinQ Application Features

Communicate with the appliance from a smartphone using the convenient smart features.

Smart Diagnosis

- If you experience a problem while using the appliance, this smart diagnosis feature will help you diagnose the problem.

Settings

- Allows you to set various options on the appliance and in the application.

NOTE

- If you change your wireless router, internet service provider, or password, delete the registered appliance from the **LG ThinQ** application and register it again.
- The application is subject to change for appliance improvement purposes without notice to users.
- Functions may vary by model.

Installing LG ThinQ Application and Connecting an LG Appliance

Models with QR Code

Scan the QR code attached to the product using the camera or a QR code reader application on your smartphone.

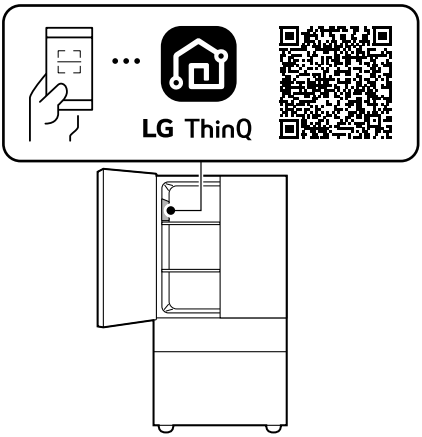

Models without QR Code

1 Search for and install the **LG ThinQ** application from the Google Play Store or Apple App Store on a smartphone.

2 Run the **LG ThinQ** application and sign in with your existing account or create an LG account to sign in.

3 Touch the add (+) button on the **LG ThinQ** application to connect your LG appliance. Follow the instructions in the application to complete the process.

NOTE

- To verify the Wi-Fi connection, check that the Wi-Fi indicator on the control panel is lit.

NOTE

- The appliance supports 2.4 GHz Wi-Fi networks only. To check your network frequency, contact your Internet service provider or refer to your wireless router manual.
- **LG ThinQ** is not responsible for any network connection problems or any faults, malfunctions, or errors caused by network connection.
- The surrounding wireless environment can make the wireless network service run slowly.
- If the distance between the appliance and the wireless router is too far, the signal strength becomes weak. It may take a long time to connect or installation may fail.
- If the appliance is having trouble connecting to the Wi-Fi network, it may be too far from the router. Purchase a Wi-Fi repeater (range extender) to improve the Wi-Fi signal strength.
- The network connection may not work properly depending on the Internet service provider.
- The Wi-Fi connection may not connect or may be interrupted because of the home network environment.
- The appliance cannot be connected due to problems with the wireless signal transmission. Unplug the appliance and wait about a minute before trying again.
- If the firewall on your wireless router is enabled, disable the firewall or add an exception to it.
- The wireless network name (SSID) should be a combination of English letters and numbers. (Do not use special characters.)
- Smartphone user interface (UI) may vary depending on the mobile operating system (OS) and the manufacturer.
- If the security protocol of the router is set to **WEP**, you may fail to set up the network. Please change it to other security protocols (**WPA2** is recommended) and connect the product again.
- To disable the Wi-Fi function, press and hold the **Wi-Fi** button for 3 seconds. The Wi-Fi indicator will be turned off.
- To reconnect the appliance or add another user, press and hold the **Wi-Fi** button for 3 seconds to temporarily turn it off. Run the **LG ThinQ** application and follow the instructions in the application to connect the appliance.

Wireless LAN Module Regulation

The operation of this equipment is subject to the following two conditions:

(1) it is possible that this equipment or device may not cause harmful interference and

(2) this equipment or device must accept any interference, including interference that may cause its undesired operation.

Open Source Software Notice Information

To obtain the source code that is contained in this product, under GPL, LGPL, MPL, and other open source licenses that have the obligation to disclose source code, and to access all referred license terms, copyright notices and other relevant documents, please visit https://opensource.lge.com.

LG Electronics will also provide open source code to you on CD-ROM for a charge covering the cost of performing such distribution (such as the cost of media, shipping, and handling) upon email request to opensource@lge.com.

This offer is valid to anyone in receipt of this information for a period of three years after our last shipment of this product.

Smart Diagnosis

Use this feature to help you diagnose and solve problems with your appliance.

NOTE

- For reasons not attributable to LGE's negligence, the service may not operate due to external factors such as, but not limited to, Wi-Fi unavailability, Wi-Fi disconnection, local app store policy, or app unavailability.

- The feature may be subject to change without prior notice and may have a different form depending on where you are located.

LG ThinQ Application Feature

*1 This feature is only available on some models.

Smart Diagnosis*1

If you experience a problem while using the appliance, this smart diagnosis feature will help you diagnose the problem.

NOTE

- The application is subject to change for product improvement purposes without notice to users.

Using LG ThinQ to Diagnose Issues

If you experience a problem with your Wi-Fi equipped appliance, it can transmit troubleshooting data to a smartphone using the **LG ThinQ** application.

- Launch the **LG ThinQ** application and select the **Smart Diagnosis** feature in the menu. Follow the instructions provided in the **LG ThinQ** application.

Using Audible Diagnosis to Diagnose Issues

Follow the instructions below to use the audible diagnosis method.

- Launch the **LG ThinQ** application and select the **Smart Diagnosis** feature in the menu. Follow the instructions for audible diagnosis provided in the **LG ThinQ** application.

1 Open the fridge door and then hold the phone on the upper right speaker hole.

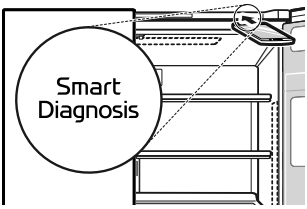

2 Press and hold the **Freezer** button for three seconds or longer while holding your phone to the speaker until the data transfer is complete.

3 After the data transfer is complete, the diagnosis will be displayed in the application.

NOTE

- For best results, do not move the phone while the tones are being transmitted.

ENGLISH

MAINTENANCE

Cleaning

General Cleaning Tips

- Performing manual defrosting, maintenance or cleaning of the appliance while food is stored in the freezer can raise the temperature of the food and reduce its storage life.
- Regularly clean any surfaces that can come in contact with food.
- When cleaning the inside or outside of the appliance, do not wipe it with a rough brush, toothpaste, or flammable materials. Do not use cleaning agents containing flammable substances. This may cause discolouration or damage to the appliance.
  - Flammable substances: alcohol (ethanol, methanol, isopropyl alcohol, isobutyl alcohol, etc.), thinner, bleach, benzene, flammable liquid, abrasive, etc.
- After cleaning, check if the power cable is damaged.

Cleaning the Exterior

- When cleaning the outside air vents of the appliance by means of vacuuming, then the power cord should be unplugged from the outlet to avoid any static discharge that can damage the electronics or cause an electric shock. Regular cleaning of the rear and side ventilation covers is recommended to maintain reliable and economical operation of the unit.
- Keep the air vents on the exterior of the appliance clean. Blocked air vents can cause fire or appliance damage.
- For the appliance exterior, use a clean sponge or soft cloth and a mild detergent in warm water. Do not use abrasive or harsh cleaners. Dry thoroughly with a soft cloth. Do not use contaminated cloths when cleaning the stainless steel doors. Always use a dedicated cloth and wipe in the same direction as the grain. This helps reduce surface staining and tarnishing.

Cleaning the Interior

- When removing a shelf or drawer from inside the appliance, remove all stored foods from the shelf or drawer to prevent injury or damage to the appliance. Otherwise, injury may occur due to the weight of stored foods.
- Detach the shelves and drawers and clean them with water, and then dry them sufficiently, before replacing them.
- Regularly wipe the door gaskets with a wet soft towel.
- Door basket spills and stains should be cleaned as they can compromise storage ability of the basket and could even be damaged.
- Never clean the shelves or containers in the dishwasher. The parts may become deformed due to the heat.
- The automatic defrosting system in the appliance ensures that the compartment remains free of ice buildup under normal operating conditions. Users do not need to defrost it manually.

Cleaning the Condenser Cover

Use a vacuum cleaner with a brush to clean the condenser cover and vents. Do not remove the panel covering the condenser coil area.

We strongly recommend that this be done every 12 months to maintain operating efficiency. Failing to do so could cause loss of cooling, higher energy usage and compressor overheating.

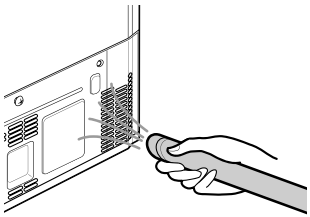

Water Filter

This feature is only available on some models.

Before Replacing the Water Filter

⚠ WARNING

- Do not allow children to have access to small parts during the installation of this product.
- Do not use with water that is microbiologically unsafe or of unknown quality without adequate disinfection before or after the system. Systems certified for cyst reduction may be used on disinfected water that may contain filterable cysts.

⚠ CAUTION

- Do not install if water pressure exceeds 827 kPa. If your water pressure exceeds 827 kPa, you must install a pressure limiting valve. Contact a plumbing professional if you are uncertain how to check your water pressure.
- Do not install where water hammer conditions may occur. If water hammer conditions exist, you must install a water hammer arrester. Contact a plumbing professional if you are uncertain how to check for this condition.
- Do not install on hot water supply lines. The maximum operating water temperature of this filter system is 37.8 °C.
- Protect filter from freezing. Drain filter when temperatures drop below 4.4 °C.
- The disposable filter cartridge MUST be replaced every 6 months, at the rated capacity or if a noticeable reduction in flow rate occurs.
- Where a backflow prevention device is installed on a water system, a device for controlling pressure due to thermal expansion must be installed.
- Ensure all tubing and fittings are secure and free of leaks.

NOTE

- While the testing was performed under standard laboratory conditions, actual performance may vary.
- It is essential that the manufacturer's recommended installation, maintenance and filter replacement requirements be carried out for the product to perform as advertised.

Replacing the Water Filter

The filter must be changed every 6 months or when the water filter indicator on the control panel lights turns on or the water dispenser output decreases.

- To purchase a replacement water filter:
  - Use replacement cartridge: LT1000P, LT1000PC, LT1000PCS or ADQ747935**
  - Visit your local dealer or distributor or contact the LG Electronics Customer Information Centre. For Further assistance, visit our website at lg.com.

1 If the top shelf, located below the water filter, is in the highest position, it will need to be removed prior to replacing the water filter.
   - To remove the shelf, lift the rear of the shelf and pull it out.

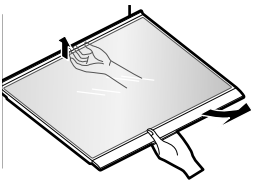

2 Remove the old water filter.

- Lower or remove the top left shelf to allow the water filter to rotate all the way down. Pinch the sides to open the water filter cover.

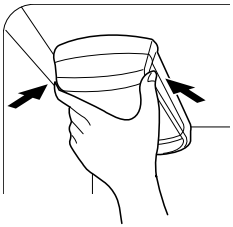

NOTE

- Replacing the water filter causes a small amount of water (around 25 cc) to drain.
- Wrap a cloth around the front end of the water filter cover to collect any leaking water. Hold the water filter upright, once it is removed, to prevent any remaining water from spilling out of the water filter.

3 Pull the water filter downward and turn it counterclockwise before pulling it out. Make sure to rotate the filter down completely before pulling it out of the manifold hole.

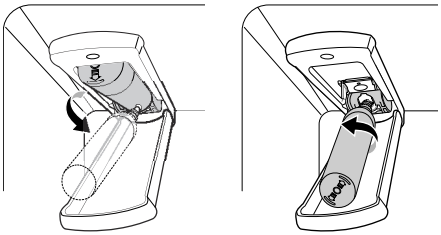

4 Replace with a new water filter.

- Take the new water filter out of its packing and remove the protective cover from the o-rings. With the water filter tabs in the horizontal position, push the new water filter into the manifold hole and turn it clockwise until it stops.

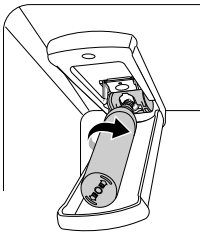

5 Close the water filter cover. The cover will click when closed correctly.

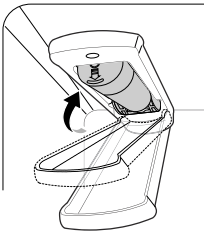

6 After the water filter is replaced, dispense about 10 liters of water (flush for approximately 5 minutes) to remove trapped air and contaminants from the system.

NOTE

- Do not dispense the entire 10 liters amount continuously. Press and release the dispenser pad for cycles of 30 seconds ON and 60 seconds OFF.

7 After changing the filter, press and hold the **Water Filter** button for three seconds to reset the indicator light.

⚠ CAUTION

- Failure to replace filters when required or using non LG authorised water filters can cause the filter cartridge to leak and result in property damage.

Application Guidelines/Water Supply Parameters

- Service Flow: 1,9 lpm
- Water Supply: Community or Private Well - Potable Water
- Water Pressure: 138 - 827 kPa
- Water Temperature: 0,6 - 37,8 °C
- Capacity: 757 litres

TROUBLESHOOTING

Before Calling for Service

Cooling

Symptoms	Possible Cause & Solution
There is no refrigeration or freezing.	**Is there a power interruption?** • Check the power of other appliances.
	Appliance is unplugged. • Plug the power plug in the outlet properly.
	A fuse in your home may be blown or the circuit breaker tripped. Or the appliance is connected to a GFCI (Ground Fault Circuit Interrupter) outlet, and the outlet's circuit breaker has tripped. • Check the main electrical box and replace the fuse or reset the circuit breaker. Do not increase fuse capacity. If the problem is a circuit overload, have it corrected by a qualified electrician. • Reset the circuit breaker on the GFCI. If the problem persists, contact an electrician.
There is poor refrigeration or freezing.	**Is the fridge or freezer temperature set to its warmest setting?** • Set the fridge or freezer temperature to a colder setting.
	Is the appliance in direct sunlight, or is it near a heat generating object such as cooking oven or heater? • Check the installation area and reinstall it away from heat generating objects.
	Did you store hot food without cooling it first? • Cool the hot food first before putting it in the fridge or freezer compartment.
	Did you put in too much food? • Maintain an appropriate space between food.
	Are the appliance doors completely closed? • Completely close the door and make sure that stored food is not obstructing in the door.
	Is there enough space around the appliance? • Adjust the installation position to make enough space around the appliance.
The appliance contains a bad smell.	**Is the fridge or freezer temperature set to 'Warm'?** • Set the fridge or freezer temperature to a colder setting.

Symptoms	Possible Cause & Solution
The appliance contains a bad smell.	**Did you put in food with a strong smell?** • Store foods with strong smells in sealed containers.
	Vegetables or fruit may have spoiled in the drawer. • Throw away rotten vegetables and clean the vegetable drawer. Do not store vegetables too long in the vegetable drawer.

Ice & Water

Symptoms	Possible Cause & Solution
The automatic icemaker does not produce ice or produces a small amount of ice.	**Did you install the appliance recently?** • The ice maker produces ice normally when approximately 48 hours have passed after the appliance is installed. • If the fridge compartment temperature is too cold, the water filter can freeze and block the water flow to the ice maker.
	Did you connect the water supply pipe to the appliance and open the supply valve? • Connect the water supply pipe to the appliance and open the supply valve completely.
	Is the water supply hose bent? • If the water supply hose is bent, the water flow could be compromised.
	Have you dispensed a large amount of ice recently? • It takes approximately 24 hours to produce more ice in the automatic icemaker. Please wait.
	Did you set the ice maker switch or the automatic icemaker button on the control panel to ON? • Press I on the automatic icemaker switch or set **ON** for the automatic icemaker button on the control panel. (For more details on how to use, visit LG Electronics website or use your smart device.)
	Is the temperature of the freezer compartment set too high? • If the set temperature is too warm, ice will be produced slowly or not at all. Set the Freezer temperature to -18 °C for normal operation of the automatic icemaker.
	Have you been opening the appliance door frequently? • If you open the appliance door frequently, cold air will escape, lowering the speed of ice production. Do not open and close the appliance door frequently.

Symptoms	Possible Cause & Solution
The automatic icemaker does not produce ice or produces a small amount of ice.	**Is the appliance door completely closed?** • If the appliance door is not completely closed, the temperature of the freezer compartment will increase, slowing down the ice production speed. Close the appliance door completely.
Ice is not dispensed.	**Unable to hear the sound of ice coming out?** • In the control panel, select the modes for cubed ice and crushed ice alternately to dispense the ice.
	Is the ice path blocked? (You can check the ice passage by separating the ice bin.) • Ice may not be dispensed properly if the ice passage is blocked. Check the ice and clean the ice path regularly.
Water does not come out.	**The supply valve may be turned off. (For Plumbed models Only)** • Open the water supply valve. • Check if the fridge compartment temperature is too cold, as the water filter can freeze and block the water flow to the dispenser.
	The water dispenser tank may be empty. (Non plumbed models only) • Fill the water dispenser tank.
	Is the water supply valve closed? (For Plumbed models Only) • Open the water supply valve.
	Are you using unfiltered water? • Unfiltered water can contain a large amount of various heavy metals or foreign substances, so the filter may be clogged in the early stage regardless of the life of the filter.
Water tastes strange.	**Is the taste of water different when comparing it with the taste of water from the previous water purifier?** • Has the purified water or cold water not been used for an extended period of time?
	Has it been a long time since you installed and replaced the filter? • If an expired filter is used, the purification performance may decline. It is recommended to replace the filter according to the filter replacement period.
	Have you flushed out the filter properly in the initial stage after installing it? • When you install or replace the filter for the first time, you need to remove air and activated carbon residue from inside the filter. Use the appliance after dispensing and discharging approximately 5 litres of purified water from the dispenser by pressing the water dispensing lever. (Activated carbon is harmless to humans.)

Symptoms	Possible Cause & Solution
Water tastes strange.	**Has the purified water or cold water not been used for an extended period of time?** • The taste of old water may change due to bacterial growth. Use the product after dispensing and discharging approximately 5 litres (approximately three minutes) from the water dispenser.

Condensation & Frost

Symptoms	Possible Cause & Solution
There is condensation inside the appliance or on the bottom of the vegetable drawer cover.	**Did you store hot food without cooling it first?** • Cool the hot food first before putting it inside the fridge or freezer.
	Did you leave the appliance door open? • Although the condensation will disappear soon after you close the appliance door, you can wipe it with a dry cloth.
	Do you open and close the appliance door too frequently? • Condensation can form due to the temperature difference from the outside. Wipe out the dampness with a dry cloth.
	Did you put warm or moist food inside without sealing it in a container? • Store food in a covered or sealed container.
Frost has formed in the freezer compartment.	**Doors may not be closed properly.** • Check if the food item inside the appliance is blocking the door and make sure that the door is tightly closed.
	Did you store hot food without cooling it first? • Cool the hot food first before putting it in the fridge or freezer compartment.
	Is the air entry or exit of the freezer compartment blocked? • Make sure that air entry or exit is not blocked so that the air can circulate inside.
	Is the freezer compartment overfilled? • Maintain an appropriate space between items.
Frost or condensation has formed inside or outside the appliance.	**Did you open and close the appliance door frequently or is the appliance door improperly closed?** • Frosts or condensation can form if the outside air penetrates inside the appliance.

Symptoms	Possible Cause & Solution
Frost or condensation has formed inside or outside the appliance.	**Is the installation environment humid?** • Condensation can appear on the exterior of the appliance if the installation area is too humid or on a humid day such as a rainy day. Wipe off any moisture with a dry cloth.
The side or front of the appliance is warm.	**There are anti condensation pipes fitted to these areas of the appliance to reduce condensation forming from around the door area.** • The heat releasing pipe to prevent condensation is installed on the front and side of the appliance. You may feel it particularly hot right after the appliance is installed or during the summer. You can be assured that this is not a problem and is quite normal.
There is water inside or outside of the appliance.	**Is there water leakage around the appliance?** • Check if the water has leaked from a sink or another place.
	Is there water on the bottom of the appliance? • Check if the water is from the thawed frozen food or a broken or dropped container.

Parts & Features

Symptoms	Possible Cause & Solution
The appliance door is not closed tightly.	**Is the appliance leaning forward?** • Adjust the front feet to raise the front side slightly.
	Were the shelves properly assembled? • Refit the shelves if needed.
	Did you close the door with excessive force? • If you apply too much force or speed when closing the door, it may remain briefly open before closing. Make sure that you do not slam the door closed. Close the door gently.
It is difficult to open the appliance door.	**Did you open the door right after you closed it?** • If you try to open the appliance door within one minute after you closed it, you may have difficulties because of the pressure inside the appliance. Try to open the appliance door again in a few minutes so that the internal pressure stabilizes.
Door mullion does not fold in and out properly.	**Are front levelling legs extended, the appliance level, and doors aligned?** • Once the door baskets are filled, the doors may become misaligned, preventing the door mullion or the Auto Open Door function from working properly. Extend both front levelling legs fully so they are in firm contact with the floor. Follow the instruction in the Door Alignment section to raise the left fridge door until the door mullion is once again working properly. Adjust the right fridge door so it aligns with the left fridge door.

Symptoms	Possible Cause & Solution
The inside lamp in the appliance does not turn on.	**Lamp failure** • Close the door and re-open. If the lamp does not turn on, please contact the LG Electronics customer information centre. Do not attempt removal of the lamp.

Noises

Symptoms	Possible Cause & Solution
The appliance is noisy and generates abnormal sounds.	**Is the appliance installed on a weak floor or improperly levelled?** • Install the appliance on a solid and flat area.
	Does the rear of the appliance touch the wall? • Adjust the installation position to allow enough clearance around the appliance.
	Are objects scattered behind the appliance? • Remove the scattered objects from behind the appliance.
	Is there an object on top of the appliance? • Remove the object on top of the appliance.
Clicking noises	**The defrost control will click when the automatic defrost cycle begins and ends. The thermostat control (or appliance control on some models) will also click when cycling on and off.** • Normal Operation
Rattling noises	**Rattling noises may come from the flow of appliance, the water line on the back of the unit (for plumbed models only), or items stored around the appliance.** • Normal Operation
	Appliance is not resting evenly on the floor. • Floor is weak or uneven or levelling legs need to be adjusted. See the Door Alignment section.
	Appliance with a compressor was moved while operating. • Normal operation. If the compressor does not stop rattling after three minutes, turn the power to the appliance off and then on again.
Whooshing noises	**Evaporator fan motor is circulating air through the fridge and freezer compartments.** • Normal Operation
	Air is being forced over the condenser by the condenser fan. • Normal Operation

Symptoms	Possible Cause & Solution
Gurgling noises	**Appliance flowing through the cooling system.** • Normal Operation
Popping noises	**Contraction and expansion of the inside walls due to changes in temperature.** • Normal Operation
Vibrating	**If the side or back of the appliance is touching a cabinet or wall, some of the normal vibrations may make an audible sound.** • To eliminate the noise, make sure that the sides and back do not make any contact with any wall or cabinet.

Wi-Fi

Symptoms	Possible Cause & Solution
Your home appliance and smartphone are not connected to the Wi-Fi network.	**The password for the Wi-Fi that you are trying to connect to is incorrect.** • Find the Wi-Fi network connected to your smartphone and remove it, then register your appliance on **LG ThinQ**.
	Mobile data for your smartphone is turned on. • Turn off the **Mobile data** of your smartphone and register the appliance using the Wi-Fi network.
	The wireless network name (SSID) is set incorrectly. • The wireless network name (SSID) should be a combination of English letters and numbers. (Do not use special characters.)
	The router frequency is not 2.4 GHz. • Only a 2.4 GHz router frequency is supported. Set the wireless router to 2.4 GHz and connect the appliance to the wireless router. To check the router frequency, check with your Internet service provider or the router manufacturer.
	The distance between the appliance and the router is too far. • If the distance between the appliance and the router is too far, the signal may be weak and the connection may not be configured correctly. Move the location of the router so that it is closer to the appliance.

APPENDIX

Information

Specification

The appearance and specifications contained in this manual may vary due to the constant improvements made to the product.

Specification for Ecuador

This information is applicable only to Ecuador.

Manufacturer's name	LG Electronics Reynosa, S. A. de C. V.	
Model No.	GM78SXT	GM78BGS
Climate class	ST (SUBTROPICAL)	
Annual energy consumption	750 kWh/year	500 kWh/year
Freezing capacity	8,0 kg/24 h	
Total gross volume	837 L	873 L
Gross fresh food compartment volume	534 L	570 L
Gross food freezer compartment volume	303 L	
Total storage volume	660 L	695 L
Storage fresh food compartment volume	507 L	542 L
Storage food freezer compartment volume	153 L	
Storage area	287 dm^2	162 dm^2
Temperature rise time	13 h	16,5 h

NOTE

- The ice making capacity in the freezer is more than 5 % of the total gross volume.

Specification for Argentina

This information is applicable only to Argentina.

A	Manufacturer's name	LG Electronics Reynosa, S. A. de C. V.
B	Model	GM78SXS
C	Product category	Refrigerator-Freezer

D	Energy eficiency class	A
		Energy efficiency class on a scale ranging from A +++ (most efficient) to D (least efficient).
E	Energy consumption	590 kWh/year
		The actual energy consumption depends on the conditions of use of the appliance and its location.
F	Refrigerator volume	507 L
G	Freezer volume * ***	153 L
	Freezer volume **	-
H	Stars clasification of freezer compartment	* ***
I	No frost product	Yes
J	Autonomy	16 h
K	Freezing capacity	8 kg / 24 h
L	Climate class	ST
M	Noise level	43 dB (A)

Memo

Memo

Memo

LG

Life's Good