Scan the QR code to see the manual.

OWNER'S MANUAL

RANGE HOOD

Before beginning installation, read these instructions carefully. This will simplify installation and ensure that the product is installed correctly and safely. Leave these instructions near the product after installation for future reference.

ENGLISH

HCEZ2428B

MFL71950302
Rev.00_082925

www.lg.com

Copyright © 2025 LG Electronics. All Rights Reserved

TABLE OF CONTENTS

This manual may contain images or content that may be different from the model you purchased.

This manual is subject to revision by the manufacturer.

SAFETY INSTRUCTIONS

READ ALL INSTRUCTIONS BEFORE USE 3
WARNING 3
CAUTION 7
CARING FOR THE ENVIRONMENT 8

INSTALLATION

Product Overview 9
Installation 10

OPERATION

Using the Appliance 15

SMART FUNCTIONS

LG ThinQ Application 16

MAINTENANCE

Cleaning and Replacing 18

TROUBLESHOOTING

Before Calling for Service 20

SAFETY INSTRUCTIONS

READ ALL INSTRUCTIONS BEFORE USE

The following safety guidelines are intended to prevent unforeseen risks or damage from unsafe or incorrect operation of the appliance. The guidelines are separated into '**WARNING**' and '**CAUTION**' as described below.

Safety Messages

⚠ This symbol is displayed to indicate matters and operations that can cause risk. Read the part with this symbol carefully and follow the instructions in order to avoid risk.

⚠ **WARNING**

This indicates that the failure to follow the instructions can cause serious injury or death.

⚠ **CAUTION**

This indicates that the failure to follow the instructions can cause the minor injury or damage to the product.

WARNING

⚠ WARNING

- To reduce the risk of explosion, fire, death, electric shock, injury or scalding to persons when using this product, follow basic precautions, including the following:

Installation

- This appliance is to be properly installed and earthed only by a suitably qualified person.
- Follow the local laws applicable for external air evacuation.

- The manufacturer will not be held liable for any damages resulting from incorrect or improper installation.
- The minimum safety distance between the cooker top and the range hood is 530 mm.
- If the instructions for installation for the gas hob specify a greater distance specified above, this has to be taken into account. Regulations concerning the discharge of air have to be fulfilled.
- Check that the mains voltage corresponds to that indicated on the rating plate fixed to the inside of the range hood.
- Check that the domestic power supply guarantees adequate earthing.
- Connect the range hood to the exhaust flue through a pipe of minimum diameter 150 mm. The route of the flue must be as short as possible.
- Do not connect the range hood to exhaust ducts carrying combustion flumes (boilers, fireplaces, etc.).
- If the range hood is used in conjunction with non-electrical appliances (e.g. gas burning appliances), a sufficient degree of aeration must be guaranteed in the room in order to prevent the backflow of exhaust gas. The kitchen must have an opening communicating directly with the open air in order to guarantee the entry of clean air. When the range hood is used in conjunction with appliances supplied with energy other than electric, the negative pressure in the room must not exceed 0.04 mbar to prevent fumes being drawn back into the room by the range hood.
- Children may put packaging material over their heads or wrap themselves up in it and suffocate. Keep packaging material away from children. Do not let children play with packaging material.
- Children may breathe in or swallow small parts, causing them to suffocate. Keep small parts away from children. Do not let children play with small parts.
- The air must not be discharged into a flue that is used for exhausting fumes from appliances burning gas or other fuels.

- Do not install the range hood near a heat producing appliance for solid fuel (e.g.wood or coal) unless a closed, nonremovable cover is available. There must be no flying sparks.
- Observe 'INSTALLATION' when installing the appliance.

Operation

- The range hood has been designed exclusively for domestic use to eliminate kitchen smells.
- Never use the range hood for purposes other than for which it has been designed. The range hood is for home use only, not suitable for barbecue, roast shop and other commercial purposes.
- Never subject the hood to any naked flames that might unintentionally occur from foods being cooked on the hob below it or at any other time.
- Adjust any gas burner flame onto the bottom of the pan only, making sure that it does not engulf the sides.
- Deep fryers must be continuously monitored during use: overheated oil can burst into flames.
- Do not apply any flame to the range hood; risk of fire. Grease deposits in the grease filter may catch fire. Never work with naked flames close to the appliance (e.g. flambéing).
- This appliance can be used by children aged from 8 years and above and persons with reduced physical, sensory or mental capabilities or lack of experience and knowledge if they have been given supervision or instruction concerning use of the appliance in a safe way and understand the hazards involved.
- Children should be supervised to ensure that they do not play with the appliance.
- There shall be adequate ventilation of the room when the range hood is used at the same time as appliances burning gas or other fuels.
- Accessible parts may become hot when used with cooking appliances. Never touch hot parts. Keep children at a safe distance.
- Hot oil and fat can ignite very quickly. Never leave hot fat or oil unattended. Never use water to put out burning oil or fat. Switch off

the hotplate. Extinguish flames carefully using a lid, fire blanket or something similar.

- When gas burners are in operation without any cookware placed on them, they can build up a lot of heat. A range hood installed above the cooker may become damaged or catch fire. Only operate the gas burners with cookware on them.
- Operating several gas burners at the same time gives rise to a great deal of heat. A range hood installed above the cooker may become damaged or catch fire. Never operate two gas burners simultaneously on the highest flame for longer than 15 minutes. One large burner of more than 5 kW (wok) is equivalent to the power of two gas burners.
- Components inside the appliance may have sharp edges. Wear protective gloves when cleaning the filters and never disassemble the appliance for maintenance or repairs.
- Items placed on the appliance may fall down. Do not place any objects on the appliance.
- The light emitted by LED lights is very dazzling, and can damage the eyes (risk group 1). Do not look directly into the switched on LED lights for longer than 100 seconds.
- Plug the power cord to a suitable and matching voltage socket outlet with earthing continuity terminal. appliance has been designed to operate from a mains grid power supply.
- Use the unit according to the instructions to avoid any fire hazard.
- Never operate the appliance without a grease filter.

Maintenance

- Do not repair or replace any part of the appliance unless specifically recommended in the manual. All other servicing should be done by a qualified technician.
- Cleaning and user maintenance shall not be made by children without supervision.
- There is a fire risk if cleaning is not carried out in accordance with the instructions.

- Switch off or unplug the appliance from the mains supply before carrying out any maintenance work.
- Clean and/or replace the filters after the specified time period (to avoid a fire).
- Fatty deposits in the grease filter may catch fire. Regularly clean the grease filter.
- Prior to any maintenance, cleaning operation, ensure the power is cut off. Penetrating moisture may cause an electric shock. Do not use wet sponge cloths or flammable liquid cleaning solutions.
- If the supply cord is damaged, it must be replaced by the manufacturer, service agent or similarly qualified person in order to avoid a hazard. The replaced power cord should be provided by manufacturer or seller.
- If the plug or cord is damaged, contact an LG Electronics Customer Information Centre.

CAUTION

⚠ CAUTION

- To reduce the risk of injury to persons, malfunction, or damage to the product or property when using the appliance, follow basic safety precautions, including the following:

Maintenance

- Do not use corrosive detergents or flammable liquids or solvents for cleaning. The proper function of the unit is conditioned by the regularity of the maintenance.
- If a malfunction or fault has occurred with the appliance, contact an LG Electronics Customer Information Centre.
- The grease filters may become damaged if they are squeezed. Do not squeeze the grease filters.

Disposal

- Used appliances must be rendered unusable prior to disposal so that they no longer present a risk. To achieve this, disconnect from the mains supply and remove the power supply cable.
- For the protection of the environment, used appliances must be disposed of properly.
- Your local City Council will inform you of times for collecting special waste or identify public disposal facilities for you.

CARING FOR THE ENVIRONMENT

Used Appliances

⚠ CAUTION

- Used appliances must be rendered unusable prior to disposal so that they no longer present a risk. To achieve this, disconnect from the mains supply and remove the power supply cable.

For the protection of the environment, used appliances must be disposed of properly.

- The appliance must not be disposed of along with normal domestic waste.

INSTALLATION

Product Overview

Parts

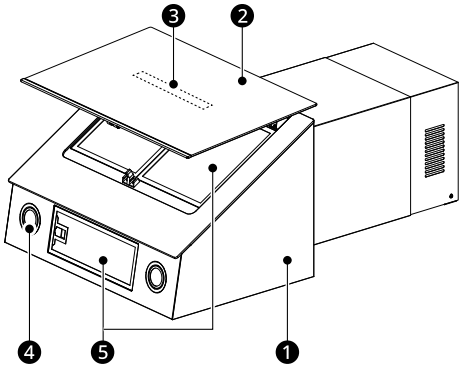

❶ Hood Body

❷ Control Panel Glass

❸ Control Panel

❹ Light

❺ Grease Filter

Accessories

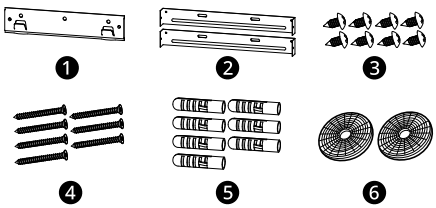

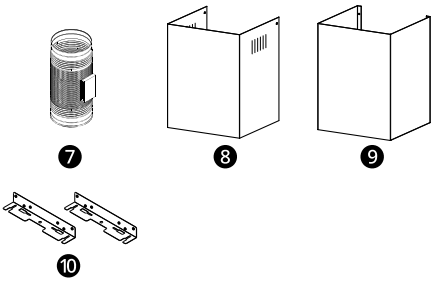

❶ Hood Fixing Bracket (1 ea)

❷ Chimney Fixing Brackets (2 ea)

❸ Screws (Φ4.2 mm x 9.5 mm, 8 ea)

❹ Screws (Φ5 mm x 50 mm, 7 ea)

❺ Wall Plugs (7 ea)

❻ Activated Charcoal Filters (2 ea)

❼ Exhaust Pipe with tape (1 ea)

❽ Upper Decorative Chimney (1 ea)

❾ Lower Decorative Chimney (1 ea)

❿ Mounting Brackets (2 ea)

NOTE

- Always wear work gloves for all installation and maintenance operations.
- Wall plugs are provided to secure the hood to most types of walls/ceilings. However, a qualified technician must verify suitability of the materials in accordance with the type of wall/ ceiling. The wall/ceiling must be strong enough to take the weight of the hood. Do not tile, grout or silicone this appliance to the wall. Surface mounting only.

Scope of Delivery

After unpacking all parts and accessories, check for any damage in transit upon completion of the delivery.

Specifications

Model	HCEZ2428B
Voltage	220 - 240 V ~ 50/60 Hz
Rated Power	218 W
Lighting Power	2 x 1.5 W
Motor Power	215 W
Diameter of Air Tube	150 mm
Air Flow	649.0 m^3/h

The parameters are tested under conditions of 230 V 50 Hz when the voltage is 220-240 V~ 50/60 Hz and without activated charcoal filters.

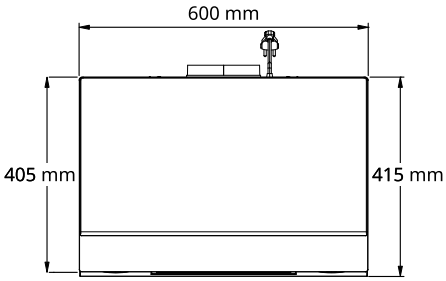

Installation

Dimensions and Clearances

- Make sure the appliance is placed horizontally to avoid grease collection at one end.
- After installation, make sure that the power plug is accessible and can be pulled out if necessary.
- The appliance should be placed minimum 530 mm up from the highest point of the Cooktop's surface for safety and effective operation.
- There must be adequate ventilation of the room when the appliance is working.

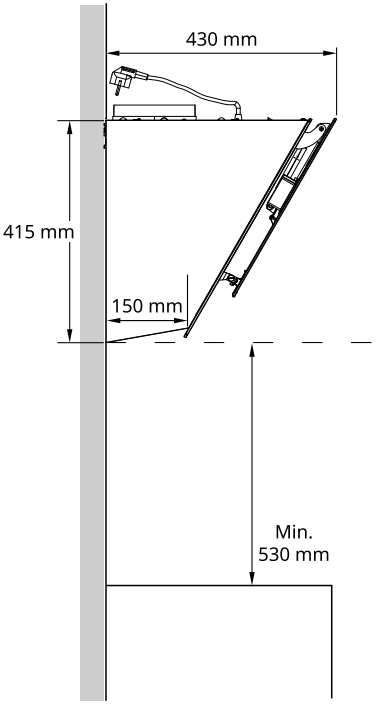

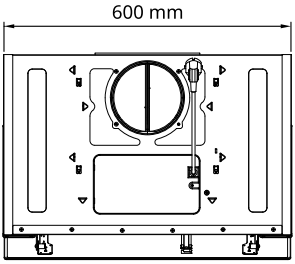

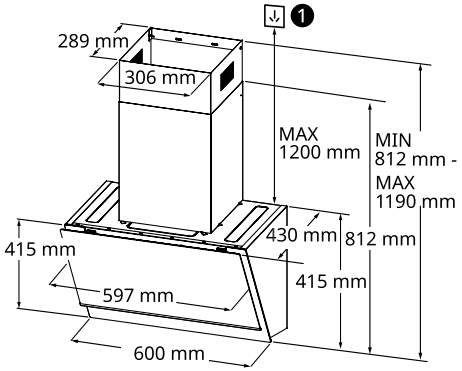

❶ Power Socket

Installing the Appliance

Wall Drilling and Bracket Fixing

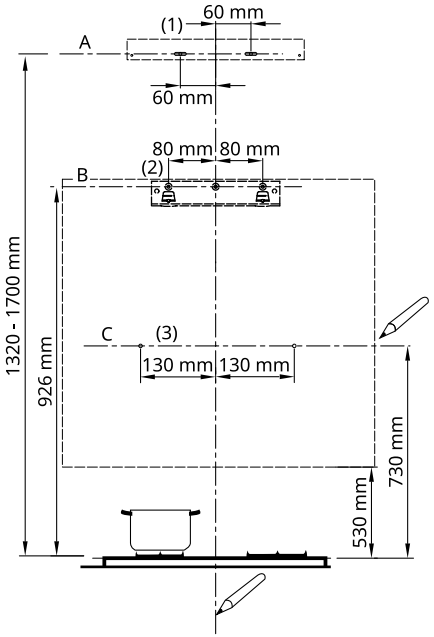

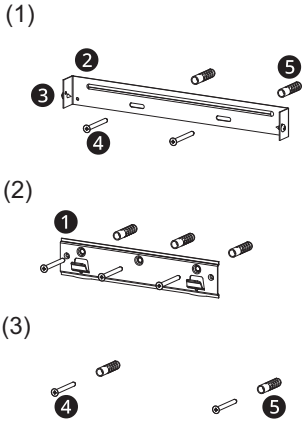

❶ Hood Fixing Bracket

❷ Chimney Fixing Bracket

❸ Screws (Φ4.2 mm x 9.5 mm)

❹ Screws (Φ5 mm x 50 mm)

❺ Wall Plugs

⚠ WARNING

- The air must not be discharged into a flue that is used for exhausting fumes from appliances burning gas or other fuels.
- Do not install the range hood near a heat producing appliance for solid fuel (e.g. wood or coal) unless a closed, nonremovable cover is available. There must be no flying sparks.

As a first step, proceed with the previous drawings:

1 Make sure that there are no electrical lines, water lines or other utilities in the drilling area before drilling.

2 A vertical line up to the ceiling or up to the upper limit, at the center of the area in which the range hood is to be fitted.

3 A horizontal line **A** at **1320 - 1700** mm above the cooker top.

4 A horizontal line **B** at a minimum **926** mm above the cooker top.

5 A horizontal line **C** at a minimum **730** mm above the cooker top.

Mark Points:

1 Mark a point **(1)** on the horizontal line **A, 60** mm to the right of the vertical reference line.

2 Repeat this operation on the other side, checking that the two marks are leveled.

3 Mark a point **(2)** on the horizontal line **B, 80** mm to the right of the vertical reference line.

4 Repeat this operation on the other side and on the vertical reference line, checking that the three marks are leveled.

5 Mark a point **(3)** on the horizontal line **C, 130** mm to the right of the vertical reference line.

6 Repeat this operation on the other side, checking that the two marks are on the same horizontal line.

Fix the brackets:

1 Drill at the marked points **(1) (2) (3)**, using a Φ10 mm drill bit.

2 Insert the wall plugs ❺ into the holes **(1) (2) (3)**.

3 Fix the hood fixing bracket ❶ with 3 screws (Φ5 mm x 50 mm) ❹ supplied with the range hood at the points **(2)**.

4 Fix a chimney fixing bracket ❷ with 2 screws (Φ5 mm x 50 mm) ❹ supplied with the range hood at the points **(1)**.

Choose the Working Mode

The range hood can be operated in recirculation or extraction-air mode. Extraction-air mode, the air is discharged out of the house by a pipe. Recirculation mode, the air is purified and discharged into the house through two rows of holes on the adjustable decorative chimney. For recirculation mode, assembled activated charcoal filters on each side as cover to both the shield grids of the motor impeller, then turn clockwise ❶. For the disassembly, turn counterclockwise ❷

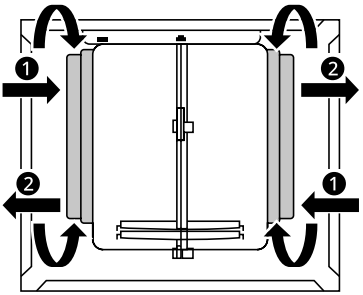

NOTE

- For recirculation mode, without the exhaust pipe, install activated charcoal filters. When activated charcoal filters attached, the suction power will be lowered.

Hook the hood body:

1 Remove the protective film from the decorative chimney and hood body.

2 Open the panel.

3 Remove all metal grease filter using the handles provided. See MAINTENANCE chapter.

4 Hook the hood body to the hood fixing bracket ❶.

5 From the inside of the hood body, fix the screws (Φ5 mm x 50 mm) ❹ to wall plugs ❺ at the points (3).

6 Connect the power cord.

7 Fit the grease filter into the range hood.

8 Close the panel.

Chimney Assembly

Lower Decorative Chimney

1 Hook the mounting brackets ❽ onto the hood body, and fix them with 2 screws ❸ (Φ4.2 mm x 9.5 mm), making sure that they are well seated.

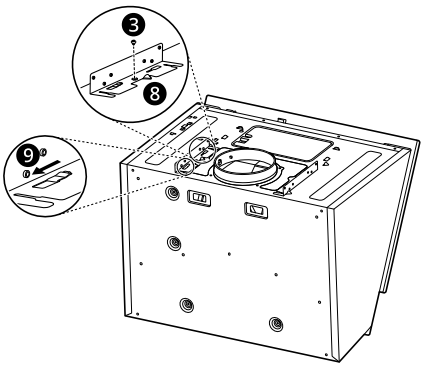

❾ Move the mounting bracket along the direction shown in the figure.

2 Fix a chimney fixing bracket ❷ onto the lower decorative chimney with 2 screws (Φ4.2 mm x 9.5 mm) ❸ supplied with the appliance.

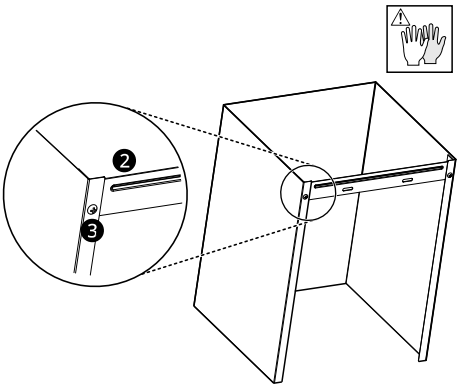

3 Slightly widen the two sides of the lower chimney and hook them to the brackets ❽, fix the lower chimney onto the mounting brackets ❽ with 2 screws ❸ (Φ4.2 mm x 9.5 mm) supplied with the appliance. Take care not to pinch the power cord.

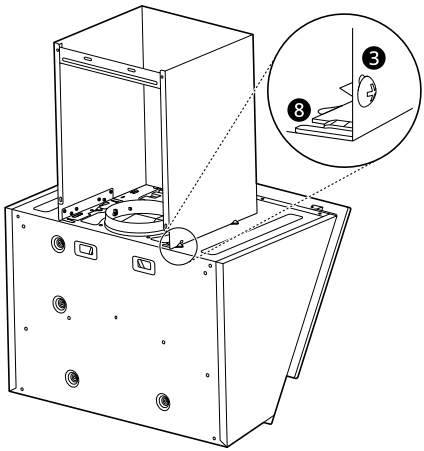

Ducted Version Air Exhaust System

Fix the exhaust pipe in position using tapes. When installing the ducted version, connect the appliance to the chimney using either a flexible or

rigid pipe Φ150 mm, the choice of which is left to the installer.

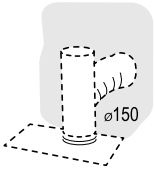

Upper Decorative Chimney

1 Slightly widen the two sides of the upper chimney and hook them between the wall and the chimney fixing bracket ❷ which is fixed on the lower decorative chimney.

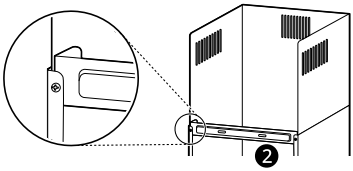

2 Fix the upper chimney onto the chimney fixing bracket ❷ at the wall with 2 screws (Φ4.2 mm x 9.5 mm) ❸ supplied with the appliance.

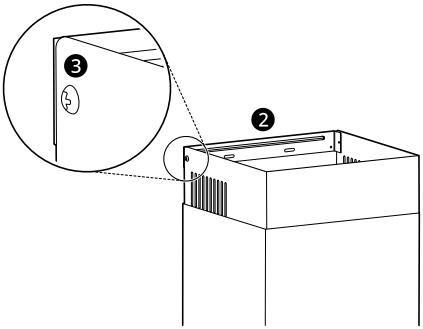

OPERATION

Using the Appliance

Control Panel

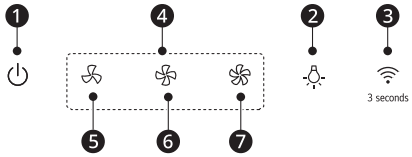

❶ Power

- When you press the **Power** button, the appliance will turn on. At this time, a beep sound will be heard, the motor will run at low speed and the **Power** button, **Low Speed ❺** button and lamp LEDs will be on (power-on state). If you turn off the power while using the product, the appliance operates at the speed mode it was using when its next turned on.

❷ Light

- The **Light** button independently controls the lights free from the effect of other buttons.
- When you press this button once, a beep sound will be heard, the lights and the **Light** button LED will be on.
- When you press this button again, a beep sound will be heard, the lights and the **Light** button LED will be off.

❸ Wi-Fi Connection

- Press the **Wi-Fi** connection button 3 seconds. **Wi-Fi** LED wii be flashing.
- When product connected with smartphone, **Wi-Fi** LED will be stopped flashing. Follow the instructions in the **LG ThinQ** application on your smartphone for using the **Wi-Fi** function.

NOTE

- **Wi-Fi** will not work with any connection problems or any faults, malfunctions, or errors caused by network connection.

❹ Speed Selection

Depending on the effect of each button, the appliance will operate in one of three modes: low speed mode, middle speed mode, and high speed mode.

- **❺ Low Speed**
- **❻ Middle Speed**
- **❼ High Speed**

NOTE

- We recommend that you switch on the appliance for a few minutes before you start cooking, and then leave it running for approximately 8 minutes afterwards to ensure that all possible odours are extracted or minimized.

SMART FUNCTIONS

LG ThinQ Application

This feature is only available on models with Wi-Fi.

The **LG ThinQ** application allows you to communicate with the appliance using a smartphone.

LG ThinQ Application Features

Communicate with the appliance from a smartphone using the convenient smart features.

Induction pairing
Allows you to choose which range hood to work with your induction.

Monitoring
This function helps you check the operation status of the product, speed mode.

Remote control
This function helps you control the speed mode.

NOTE

- In the following cases, you must update the network information for each appliance in the **LG ThinQ** application under **Device Cards ⟶ Settings ⟶ Change Network**.
  - wireless router is changed
  - wireless router password is changed
  - Internet service provider is changed
- To disconnect the appliance from the **Wi-Fi** network, delete the appliance from the list of connected products in the **LG ThinQ** application.
- The application is subject to change for appliance improvement purposes without notice to users.
- Functions may vary by model.

Installing LG ThinQ Application and Connecting an LG Appliance

Models with QR Code

Scan the QR code attached to the product using the camera or a QR code reader application on your smartphone.

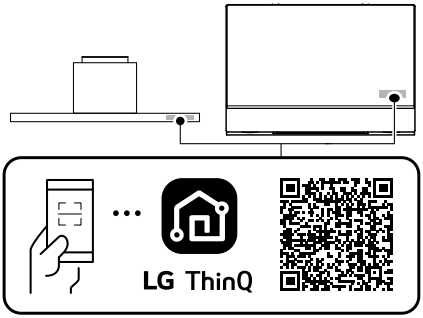

Models without QR Code

1 Search for and install the **LG ThinQ** application from the Google Play Store or Apple App Store on a smartphone.

2 Run the **LG ThinQ** application and sign in with your existing account or create an LG account to sign in.

3 Touch the add (+) button on the **LG ThinQ** application to connect your LG appliance. Follow the instructions in the application to complete the process.

NOTE

- To verify the Wi-Fi connection, check that the Wi-Fi indicator on the control panel is lit.
- The appliance supports 2.4 GHz Wi-Fi networks only. To check your network frequency, contact your Internet service provider or refer to your wireless router manual.

- **LG ThinQ** is not responsible for any network connection problems or any faults, malfunctions, or errors caused by network connection.
- The surrounding wireless environment can make the wireless network service run slowly.
- If the distance between the appliance and the wireless router is too far, the signal strength becomes weak. It may take a long time to connect or installation may fail.
- If the appliance is having trouble connecting to the Wi-Fi network, it may be too far from the router. Purchase a Wi-Fi repeater (range extender) to improve the Wi-Fi signal strength.
- The network connection may not work properly depending on the Internet service provider.
- The Wi-Fi connection may not connect or may be interrupted because of the home network environment.
- The appliance cannot be connected due to problems with the wireless signal transmission. Unplug the appliance and wait about a minute before trying again.
- If the firewall on your wireless router is enabled, disable the firewall or add an exception to it.
- The wireless network name (SSID) should be a combination of English letters and numbers. (Do not use special characters.)
- Smartphone user interface (UI) may vary depending on the mobile operating system (OS) and the manufacturer.
- If the security protocol of the router is set to **WEP**, you may fail to set up the network. Please change it to other security protocols (**WPA2** is recommended) and connect the product again.
- To disable the Wi-Fi function, press and hold the **Wi-Fi** connection button for 3 seconds. The Wi-Fi indicator will be turned off.
- To reconnect the appliance or add another user, press and hold the **Wi-Fi** connection button for 3 seconds to temporarily turn it off. Run the **LG ThinQ** application and follow the instructions in the application to connect the appliance.

Radio Equipment Specifications

Type	Operating Frequency Range	Output Power (Max.)
Wireless LAN	2400 MHz - 2483.5 MHz	< 100 mW
Bluetooth*1		

*1 This feature is only available on some models.

Wireless function S/W version: V 1.0

For consideration of the user, this device should be installed and operated with a minimum distance of 20 cm between the device and the body.

Declaration of Conformity

CE

Hereby, LG Electronics declares that the radio equipment type Range Hood is in compliance with Directive 2014/53/EU. The full text of the EU declaration of conformity is available at the following internet address:

http://www.lg.com/global/support/cedoc/cedoc#

Open Source Software Notice Information

To obtain the source code that is contained in this product, under GPL, LGPL, MPL, and other open source licenses that have the obligation to disclose source code, and to access all referred license terms, copyright notices and other relevant documents, please visit https://opensource.lge.com.

LG Electronics will also provide open source code to you on CD-ROM for a charge covering the cost of performing such distribution (such as the cost of media, shipping, and handling) upon email request to opensource@lge.com.

This offer is valid to anyone in receipt of this information for a period of three years after our last shipment of this product.

MAINTENANCE

Cleaning and Replacing

⚠ WARNING

- Switch off or unplug the appliance from the mains supply before carrying out any maintenance work.
- Make sure that the appliance is shut off before cleaning.

⚠ CAUTION

- Falling grease filters may damage the hob below. Grip below the grease filter with one hand and make sure they are properly secured when refitted.

Cleaning

Cleaning the appliance

1 Observe the instructions of the cleaning agent manufacturer.

2 Clean stainless steel surfaces in the direction of the finish using a sponge cloth and hot soapy water. To protect the main body from corrosive of the long time accumulation of dirt, the range hood should be cleaned with hot water with noncorrosive detergent every two months.

3 Dry with a soft cloth.

4 Apply a thin layer of the stainless steel cleaning product to stainless steel surfaces using a soft cloth.

Cleaning Grease Filters in the Dishwasher

1 Pull the control panel glass to open them.

2 Remove all grease filters.

3 Put the grease filters into a dishwasher with detergent, set the temperature below 60 degrees. The filters must be cleaned every 2 months of operation, or more frequently for particularly heavy usage, and can be washed in a dishwasher.

4 Do not use abrasive detergent for it will damage the appliance.

5 Allow the grease filters to drain.

6 Fitting the grease filters.

7 Close the control panel glass.

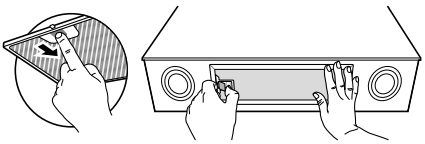

NOTE

- Steam cleaner is not to be used.
- When cleaning the grease filter in the dishwasher, light discolouration may occur. This discolouration has no effect on the performance of the grease filters.

Cleaning Grease Filters manually

1 Observe the instructions of the cleaning agent manufacturer.

2 Soak the grease filter in hot soapy water.

3 Use a brush to clean the grease filters.

4 Rinse the grease filters thoroughly.

5 Allow the grease filters to drain.

6 Fitting the grease filters.

Cleaning the Control Panel Glass

1 Observe the instructions of the cleaning agent manufacturer.

2 Clean using a damp sponge cloth and hot soapy water.

3 Dry with a soft cloth.

Replacing

Replacing the Activated Charcoal Filter (Recirculation Version)

These filters are not washable and cannot be regenerated, and must be replaced approximately every 4 months of operation, or more frequently with heavy usage.

1 Remove the grease filters.

2 Remove the saturated activated charcoal filter. For the disassembly, turn counter-clockwise ❷.

3 Fit the new activated charcoal filters, apply one on each side as cover to both the shield grids of the motor impeller, then turn clockwise ❶.

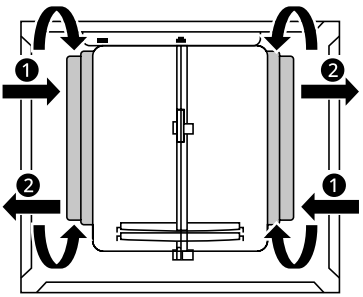

Replacing the Light

LED light

Call for service. Repairs should be performed by a licensed technician only. Improper repair may result in considerable danger to you and others.

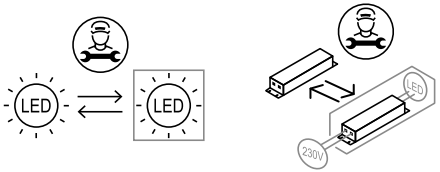

Round/Diameter	70 mm
Max. Power	1.5 W
Voltage	DC 12 V
Picture	
Lamp Cap	-
ILCOS D code	DSR-1.5-S-70

TROUBLESHOOTING

Before Calling for Service

Repairs should be performed by a licensed technician only. Improper repair may result in considerable danger to you and others. However, some minor problems can be resolved as in the table below:
If a problem is not solved, please contact an LG Electronics Customer Information Centre.

Parts and Features

The manufacturer will decline all responsibility if the recommendations and instructions regarding installation, maintenance and use are not observed and respected when using the appliance.

Symptoms	Possible Cause & Solution
Light on, but motor does not work	**The motor is blocked.** • Call for service.
	The internal wiring of motor is cut off/disconnected. An unpleasant smell may be produced. • Call for service.
Both light and motor do not work	**Apart from the possibilities mentioned above, check the following:** **Light is damaged.** • Call for service.
Vibration	**The motor, if damaged, can cause vibration.** • Call for service.
	The motor is not tightly fastened. • Call for service.
	The appliance is not securely fixed. • Fixed the appliance securely.
Insufficient suction	**The distance between the appliance and the cooker top is too great.** • Readjust the distance.
	Too much ventilation from open doors or windows. • Close some doors / windows.
The appliance is not level	**The fixing screws are not tight enough.** • Tighten the fixing screws and ensure that the appliance is horizontal.
	The hanging screws are not tight enough. • Tighten the hanging screws and ensure that the appliance is horizontal.

Wi-Fi

Symptoms	Possible Cause & Solution
Your home appliance and smartphone are not connected to the Wi-Fi network.	**The password for the Wi-Fi that you are trying to connect to is incorrect.** • Find the Wi-Fi network connected to your smartphone and remove it, then register your appliance on **LG ThinQ**.
	Mobile data for your smartphone is turned on. • Turn off the **Mobile data** of your smartphone and register the appliance using the Wi-Fi network.
	The wireless network name (SSID) is set incorrectly. • The wireless network name (SSID) should be a combination of English letters and numbers. (Do not use special characters.)
	The router frequency is not 2.4 GHz. • Only a 2.4 GHz router frequency is supported. Set the wireless router to 2.4 GHz and connect the appliance to the wireless router. To check the router frequency, check with your Internet service provider or the router manufacturer.
	The distance between the appliance and the router is too far. • If the distance between the appliance and the router is too far, the signal may be weak and the connection may not be configured correctly. Move the location of the router so that it is closer to the appliance.

After Sales Service (Egypt Only)

- Shelf Life Time : 6 Years
- LG is committed to providing all spare parts of this appliance during the shelf life time.

Memo

Memo

