LG
Life's Good

OWNER'S MANUAL

Mini Hi-Fi System

Please read this manual carefully before operating your set and retain it for future reference.

MODEL
CM5660 (CM5660, CMS5760F)

MFL69533907

www.lg.com

Safety Information

CAUTION: TO REDUCE THE RISK OF ELECTRIC SHOCK DO NOT REMOVE COVER (OR BACK) NO USER-SERVICEABLE PARTS INSIDE REFER SERVICING TO QUALIFIED SERVICE PERSONNEL.

This lightning flash with arrowhead symbol within an equilateral triangle is intended to alert the user to the presence of uninsulated dangerous voltage within the product's enclosure that may be of sufficient magnitude to constitute a risk of electric shock to persons.

The exclamation point within an equilateral triangle is intended to alert the user to the presence of important operating and maintenance (servicing) instructions in the literature accompanying the product.

WARNING: TO PREVENT FIRE OR ELECTRIC SHOCK HAZARD, DO NOT EXPOSE THIS PRODUCT TO RAIN OR MOISTURE.

WARNING: Do not install this equipment in a confined space such as a book case or similar unit.

CAUTION: Do not block any ventilation openings. Install in accordance with the manufacturer's instructions.
Slots and openings in the cabinet are provided for ventilation and to ensure reliable operation of the product and to protect it from over heating. The openings shall be never be blocked by placing the product on a bed, sofa, rug or other similar surface. This product shall not be placed in a built-in installation such as a bookcase or rack unless proper ventilation is provided or the manufacturer's instruction has been adhered to.

CAUTION: This product employs a Laser System. To ensure proper use of this product, please read this owner's manual carefully and retain it for future reference. Shall the unit require maintenance, contact an authorized service center.
Use of controls, adjustments or the performance of procedures other than those specified herein may result in hazardous radiation exposure.
To prevent direct exposure to laser beam, do not try to open the enclosure.

CAUTION concerning the Power cord

Most appliances recommend they should be placed upon a dedicated circuit;

That is, a single outlet circuit which powers only that appliance and has no additional outlets or branch circuits. Check the specification page of this owner's manual to be certain. Do not overload wall outlets. Overloaded wall outlets, loose or damaged wall outlets, extension cords, frayed power cords, or damaged or cracked wire insulation are dangerous. Any of these conditions could result in electric shock or fire. Periodically examine the cord of your appliance, and if its appearance indicates damage or deterioration, unplug it, discontinue use of the appliance, and have the cord replaced with an exact replacement part by an authorized service center. Protect the power cord from physical or mechanical abuse, such as being twisted, kinked, pinched, closed in a door, or walked upon. Pay particular attention to plugs, wall outlets, and the point where the cord exits the appliance. The Power Plug is the disconnecting device. In case of an emergency, the Power Plug must remain readily accessible.

This device is equipped with a portable battery or accumulator.

Safety way to remove the battery or the battery from the equipment: Remove the old battery or battery pack, follow the steps in reverse order than the assembly. To prevent contamination of the environment and bring on possible threat to human and animal health, the old battery or the battery put it in the appropriate container at designated collection points. Do not dispose of batteries or battery together with other waste. It is recommended that you use local, free reimbursement systems batteries and accumulators. The battery shall not be exposed to excessive heat such as sunshine, fire or the like.

CAUTION: The apparatus should not be exposed to water (dripping or splashing) and no objects filled with liquids, such as vases, should be placed on the apparatus.

CAUTION: Do not use high voltage products around this product. (ex. Electrical swatter) This product may malfunction due to electrical shock.

CAUTION: No naked flame sources, such as lighted candles, should be placed on the apparatus.

- The appliance is not intended for use by young children or infirm persons without supervision.
- Young Children should be supervised to ensure that they do not play with appliance.
- If the appliance is supplied from a cord extension set or an electrical portable outlet device, the cord extension set on electrical portable outlet device must be positioned so that it is not subject to splashing (of water or any form of liquid) or ingress of moisture.

RF Radiation Exposure Statement

This equipment should be installed and operated with minimum distance 20 cm between the radiator and your body.

Symbols

~	Refers to alternating current(AC).
⎓	Refers to direct current(DC).
⧈	Refers to class II equipment.
⏻	Refers to stand-by.
I	Refers to “ON” (power).
ϟ	Refers to dangerous voltage.

Table of Contents

1 Getting Started

2 Safety Information
6 Unique Features
6 Playable file Requirement
6 – Music file requirement
7 – Compatible USB Devices
7 – USB device requirement
8 Remote control
10 Front panel
12 Rear Panel

2 Connecting

13 Connecting to speakers
13 – Attaching the speakers to the unit
13 – Attaching the speaker light cables to the unit
14 Optional Equipment Connection
14 – Antenna Connection
14 – USB Connection
15 – AUX IN Connection
15 – PORT. IN Connection
15 – Listening to the sound from your external device

3 Operating

16 Basic Operations
16 – CD/USB Operations
16 – Auto Play
17 Other Operations
17 – Programmed Playback
17 – Deleting Programmed list
17 – Displaying file information (ID3 TAG)
18 – Searching for a folder and an MP3/WMA file
18 – Deleting an MP3/WMA file
19 – Turn off the sound temporarily
19 – DEMO
19 – Using Microphone
20 – VOICE CANCELLER
20 – KEY CHANGER
20 – LIGHTING effect
21 – AUTO DJ playback
22 Using a BLUETOOTH® wireless technology
22 – Listening to music stored on the BLUETOOTH devices
24 Using the Music Flow Bluetooth App
24 – About “Music Flow Bluetooth” App
24 – Install “Music Flow Bluetooth” App onto Your Bluetooth Device
26 Radio Operations
26 – Listening to the radio
26 – Improving poor FM reception
26 – Presetting the Radio Stations
26 – Deleting all the saved stations
27 Sound adjustment
27 – Setting the surround mode
28 Advanced Operations
28 – Recording to USB
28 – To select recording bit rate and speed
29 – USB copying
30 Setting the Clock
30 – Setting the Clock through “Music Flow Bluetooth” App
30 – Using your player as an alarm clock
31 – Sleep Timer Setting
31 – Dimmer
31 – Auto power down
32 – AUTO POWER On
32 – Auto function change
33 LG Sound Sync

34 WIRELESS PARTY LINK Connection

4 Troubleshooting

35 Troubleshooting

5 Appendix

36 General specifications
37 Speaker specifications
38 Maintenance
38 – Handling the Unit
38 – Notes on Discs
38 Trademarks and Licenses

Unique Features

BLUETOOTH®

Listens to music stored on your **Bluetooth** device.

Portable In

Listens to music from your portable device. (MP3, Notebook, etc.)

AUTO DJ

Blends the end of one song into the beginning of another for seamless playback.

USB Direct Recording

Records music to your USB device.

Music Flow Bluetooth

Music Flow Bluetooth is an app designed to let you take control of some of LG's latest Audio devices.

Refer to page 24-25

LG Sound Sync

Controls volume level of this unit by the remote control of your LG TV that is compatible with LG Sound Sync.

Playable file Requirement

Music file requirement

MP3/WMA file compatibility with this unit is limited as follows.

- Sampling frequency : within 32 to 48 kHz (MP3), within 32 to 48 kHz (WMA)
- Bit rate : within 32 to 320 kbps (MP3), 40 to 192 kbps (WMA)
- Maximum files : Data CD : 999 / USB : 2,000
- Maximum folders : Data CD : 99 / USB : 200
- File extensions : ".mp3"/".wma"
- Certain MP3/WMA files may not be played depending on the type or format of the file.
- CD-ROM file format : ISO 9660/JOLIET
- We recommend that you use Easy-CD Creator, which creates an ISO 9660 file system.

The DTS is not supported. In case of DTS audio format, audio is not output.

You have to set the disc format option to [Mastered] in order to make the discs compatible with the LG players when formatting rewritable discs. When setting the option to Live File System, you cannot use it on LG players.

(Mastered/Live File System : Disc format system for Windows Vista)

Compatible USB Devices

- MP3 Player : Flash type MP3 player.
- USB Flash Drive :
  Devices that support USB2.0 or USB1.1.
- The USB function of this unit does not support all USB devices.

USB device requirement

- Devices which require additional program installation when you have connected it to a computer, are not supported.
- Do not extract the USB device while in operation.
- For a large capacity USB, it may take longer than a few minute to be searched.
- To prevent data loss, back up all data.
- If you use a USB extension cable or USB hub, the USB device is not recognized.
- Using NTFS file system is not supported.
  (Only FAT(16/32) file system is supported.)
- This unit recognizes up to 2,000 files.
- External HDD, Card readers, Locked devices, or hard type USB devices are not supported.
- USB port of the unit cannot be connected to PC.
  The unit cannot be used as a storage device.
- Some USB may not work with this unit.

Remote control

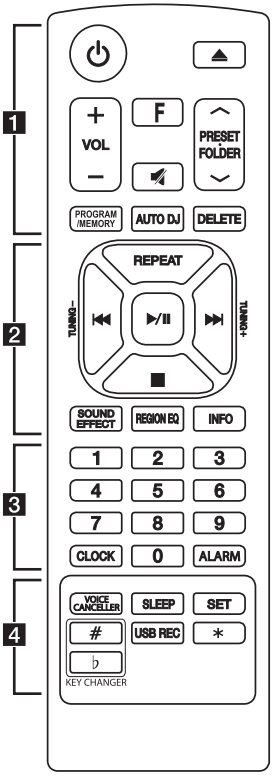

1

(Standby) : Switches the unit ON or OFF.

(Open/Close) : Opens and closes the disc tray.

VOL (Volume) **+/-** : Adjusts speaker volume.

F (Function) : Selects the function and input source.

(Mute) : Mutes the sound.

PRESET·FOLDER ∧/∨ :
- Searches for a folder of MP3/WMA files. When a CD/USB containing MP3/WMA files in several folders is being played, press **PRESET·FOLDER ∧/∨** to select the folder you want to play.
- Chooses a preset number for a radio station.

PROGRAM/MEMORY :
- Stores radio stations.
- Deletes all the saved stations.
- Creates a programmed list you want to listen to.

AUTO DJ : Selects the AUTO DJ mode. (For more information refer to page 21)

DELETE :
- Deletes MP3/WMA files. (USB only)
- Deletes a song on the programmed list.

Replacement of battery

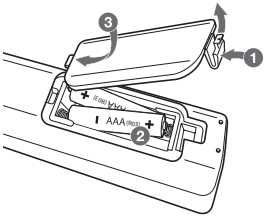

Remove the battery cover on the rear of the remote control, and insert the battery with ⊕ and ⊖ matched correctly.

2

REPEAT : Listens to your tracks/files repeatedly or randomly.

⏮ / ⏭ (Skip/Search) :
- Skips fast backward or forward.
- Searches for a section within a track/file.

TUNING -/+ : Selects the radio station.

■ (Stop) :
- Stops playback or recording.
- Cancels DELETE function.

▶/❚❚ (Play/Pause) :
- Starts or pauses playback.
- Selects STEREO/MONO.

SOUND EFFECT : Chooses sound impressions.

REGION EQ : Chooses region equalizer.

INFO :
- Sees informations about your music. An MP3 file often come with ID3 tag. The tag gives the Title, Artist, Album or Time information.
- Sees the name of connected all **Bluetooth** device in **Bluetooth** mode.
- In status of WIRELESS PARTY LINK Connection, device name of SLAVE unit appears in the MASTER unit and device name of MASTER unit appears in the SLAVE unit.

3

0 to **9** numerical buttons : Selects numbered tracks, files, or preset number.

CLOCK : Sets a clock and checks a time.

ALARM : With the ALARM function you can turn CD, USB play and Tuner reception on at a desired time.

4

VOICE CANCELLER : You can enjoy the function while playing the music, by reducing singer vocal of music in the various source.

SLEEP : Sets the system to turn off automatically at a specified time.
(Dimmer : The display window will be darkened by half.)

SET : Confirms the clock and the alarm setting.

KEY CHANGER (#/♭) : Changes the key to suit your vocal range.

USB REC : USB direct recording.

✱ : The button is not available for any function.

Front panel

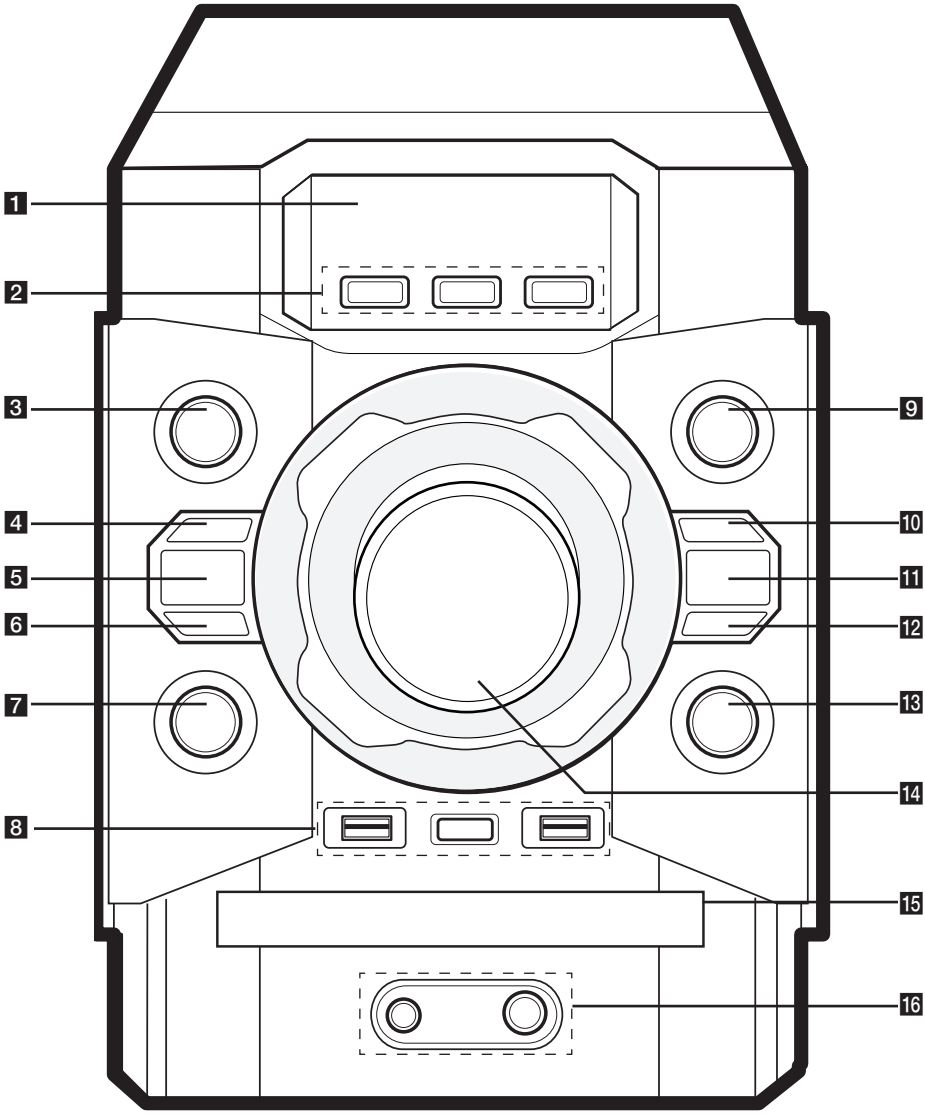

1 Display window

2 **KEY CHANGER (#/♭)**
Changes the key to suit your vocal range.

VOICE CANCELLER
You can enjoy the function while playing the music, by reducing singer vocal of music in the various source.

3 ⏻/I (Standby/On)
Switches the unit ON or OFF.

4 □ (Stop)
Stops playback or recording.

5 **AUTO DJ**
Selects the AUTO DJ mode.
(For more information refer to page 21)

6 I<< (Skip/Search)
- Searches backward.
- Skips to the previous track/file.
- Selects the radio stations.

7 **LIGHTING / MIC VOLUME**
- Turns on/off the lighting effects.
- Press and hold to enter microphone adjustment mode.

8 USB 1 / USB 2
Plays the audio files by connecting the USB device.

USB REC / DEMO
- Records to USB.
- Shows demo mode.

9 **F** (Function) **/ WIRELESS LINK**
- Selects the function and input source.
- Press and hold for 3 seconds to select WIRELESS PARTY LINK mode.

10 >/II (Play/Pause) **STEREO / MONO**
- Starts or pauses playback.
- Selects Stereo/Mono.

11 **REGION EQ / BASS BLAST**
- Chooses region equalizer.
- Press and hold to select BASS effect directly.

12 >>I (Skip/Search)
- Searches forward.
- Skips to the next track/file.
- Selects the radio stations.

13 ⏏ (Open/Close) **EJECT**
Opens or closes the disc tray.

14 **MASTER VOLUME**
- Adjusts volume of speaker.
- Adjusts volume of microphone.

15 Disc tray

16 **PORT.** (Portable) **IN** jack
Connect a portable device.

MIC. (Microphone) jack
Connect a microphone.

Rear Panel

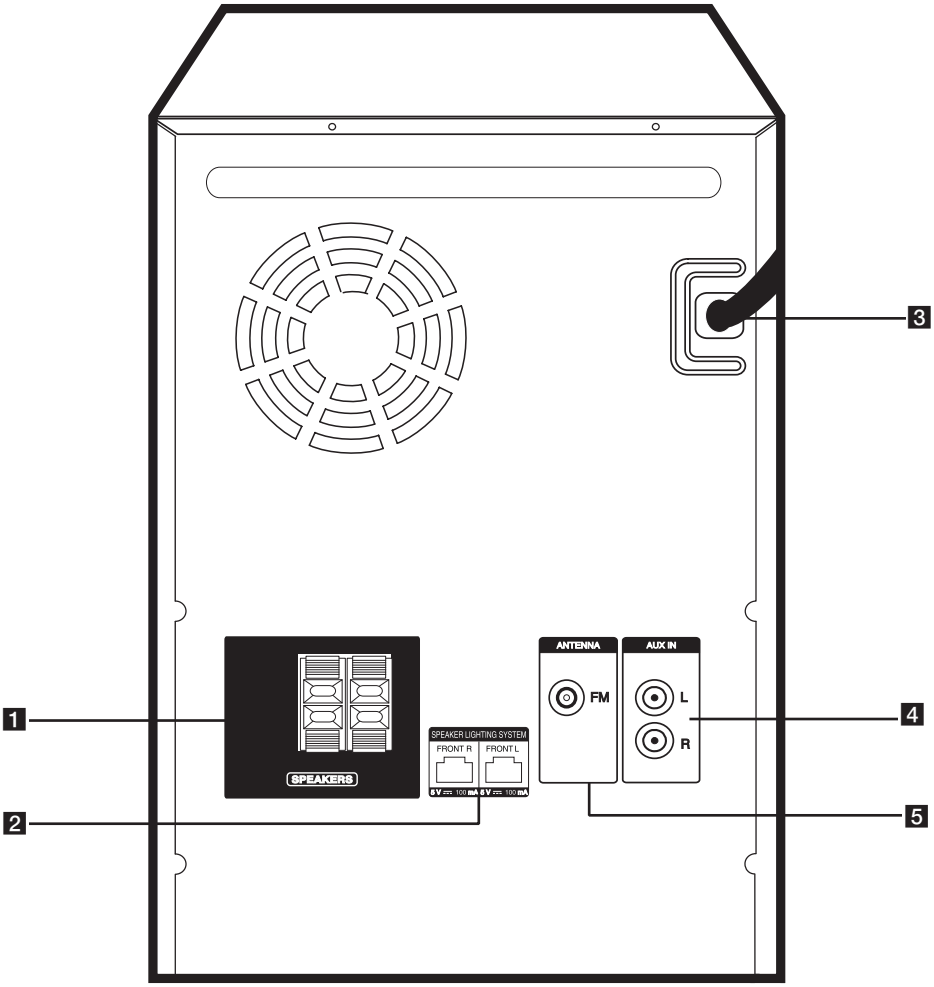

1 **SPEAKERS** terminal
2 **SPEAKER LIGHTING SYSTEM** (FRONT L/R)
3 Power cord
4 **AUX IN (L/R)** connectors
5 **ANTENNA (FM)**

Connecting to speakers

Attaching the speakers to the unit

To connect the cable to the unit, press each plastic finger pad to open the connection terminals on the unit. Insert the wire and release the finger pad.

Connect the black of each wire to the terminals marked - (minus) and the other end to the terminals marked + (plus).

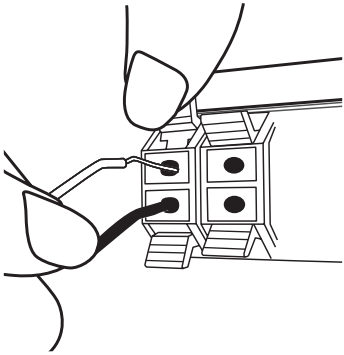

Attaching the speaker light cables to the unit

To connect the speaker light cable to the unit, insert the cable to **SPEAKER LIGHTING SYSTEM** connectors on the unit.

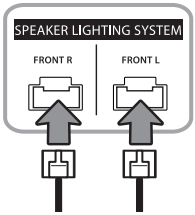

Caution

- Be careful to make sure children do not put their hands or any objects into the *speaker duct.
  * Speaker duct : A hole for plentiful bass sound on speaker cabinet (enclosure)
- The speakers contain magnet parts, so color irregularity may occur on the TV screen or PC monitor screen. Please use the speakers far away from either TV screen or PC monitor.
- Use the speaker supplied with this unit only. Using any other speaker may cause malfunction.

Optional Equipment Connection

Antenna Connection

Connect the supplied FM antenna for listening to the radio.

Connect the antenna to the antenna port on the back of the unit. Be sure to extend the FM wire antenna fully.

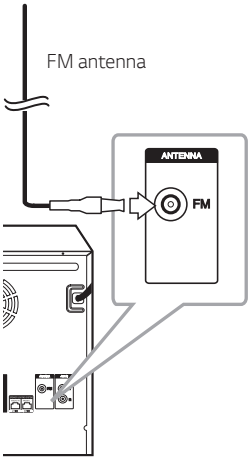

USB Connection

Connect a USB device (or MP3 player, etc.) to the USB ports on the unit.

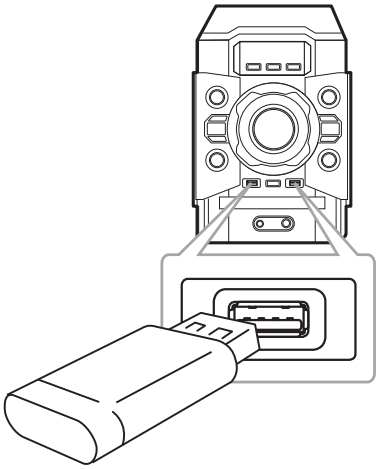

Note

Removing the USB Device from the unit.

1. Choose a different function/mode or press ■ on the remote control or ☐ on the unit twice in a row.
2. Remove the USB device from the unit.

AUX IN Connection

Connect an output of auxiliary device (Camcorder, TV, Player, etc) to the **AUX IN(L/R)** connector.

If your device has only one output for audio(mono), connect it to the left (white) audio jack on the unit.

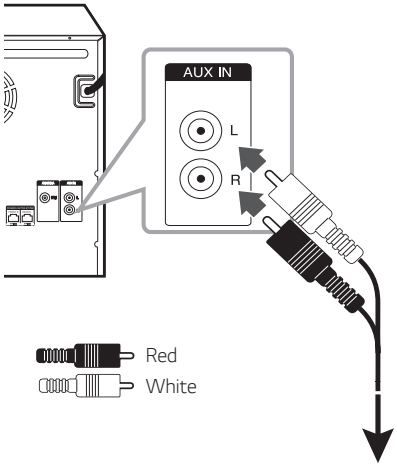

To the audio output jacks of your component (Camcorder, TV, Player, etc.)

PORT. IN Connection

Connect an output (earphone or line out) of portable device (MP3 or PMP etc.) to the **PORT. IN** connector.

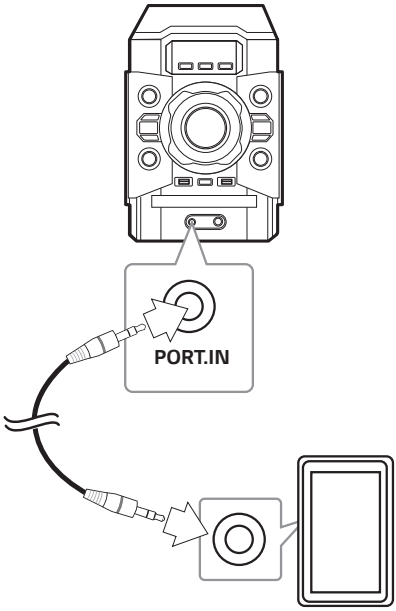

Listening to the sound from your external device

The unit can be used to play the sound from many types of external device.

1. Connect the external device to the **AUX IN(L/R)** or **PORT. IN** connector of the unit.
2. Turn the power on by pressing ⏻ on the remote control or ⏻/**I** on the unit.
3. Select the AUX or PORTABLE function by pressing **F** on the remote control or **F / WIRELESS LINK** on the unit.
4. Turn on the external device and start playing it.

Note

Automatically switches to the PORTABLE function when you connect the portable device to the **PORT. IN** connector.

Basic Operations

CD/USB Operations

1. Insert the disc by pressing ⏏ on the remote control or ⏏ **EJECT** on the unit
   Or connect the USB device to the USB port.
2. Select CD or USB function by pressing **F** on the remote control or **F / WIRELESS LINK** on the unit.

To	Do this
Stop	Press ■ on the remote control or ☐ on the unit.
Playback	Press ▶/II on the remote control or >/II on the unit.
Pause	During playback, press ▶/II on the remote control or >/II on the unit.
Searching for a section within a track/file	Press and hold I◀◀ / ▶▶I on the remote control or I<< / >>I on the unit during playback and release it at the point you want to listen to.
Selecting a track/file directly	Press **0** to **9** numerical buttons on the remote control to go to the desired file or track directly.
Skipping to the next/ previous track/file	- In stop status, Press I◀◀ / ▶▶I on the remote control or I<< / >>I on the unit to go to the next/previous track/file. - During playback, press ▶▶I on the remote control or >>I on the unit to go to the next track/file. Playing less than 2 seconds, press I◀◀ on the remote control or I<< on the unit to go to the previous track/file. Playing after 3 seconds, press I◀◀ on the remote control or I<< on the unit to go to the beginning of the track/file.
Playing repeatedly or randomly	Press **REPEAT** on the remote control repeatedly. Refer to the note for details about the display change.

Note

- The display changes in the following order.

USB	MP3/WMA CD	AUDIO CD
RPT 1	RPT 1	RPT 1
RPT*DIR	RPT DIR	-
RPT ALL	RPT ALL	RPT ALL
RANDOM	RANDOM	RANDOM
OFF	OFF	OFF

*DIR : Directory

- When you play Program list, only RPT 1 and RPT ALL are available.
- Even after restarting the unit or switching one function to another, you can listen to music from the point where it's last been played.
- If you leave the disc tray open for 5 minutes, it will close automatically.

Auto Play

AUDIO/MP3/WMA CD is played automatically after disc tray is open and then closed.

Automatically switches to the CD function if disc tray is open and then closed when there is no disc in tray.

Other Operations

Programmed Playback

The program function enables you to store your favorite files from any disc or USB device.

A program can contain 20 tracks/files for each media. Possible to save a total of 60 tracks/files.

1. Press **PROGRAM/MEMORY** on the remote control in stop status.
2. Press **⏮ / ⏭** on the remote control or **⏮ / ⏭** on the unit to select a track/file.
3. Press **PROGRAM/MEMORY** on the remote control to save and select a next track/file.
4. Repeat steps 2 - 3 to store other tracks/files. (You can modify the list by pressing **PRESET·FOLDER ∧/∨** on the remote control to select the program number.)
5. Press **PROGRAM/MEMORY** on the remote control once again.

To play the programmed list, press **▶/II** on the remote control or **>/II** on the unit after you make the list.

Note

When making or modifying the programmed list, REPEAT mode is off.

Deleting Programmed list

Deleting function only works in the edit mode.

1. Press **PROGRAM/MEMORY** on the remote control in stop status.
2. Select a song by pressing **PROGRAM/MEMORY** or **PRESET·FOLDER ∧/∨** on the remote control repeatedly.
3. Press **DELETE** on the remote control while a song is selected.

Note

- Programmed list is cleared in the case below.
  - Removing the disc or the USB device.
  - Deleting music files in the USB device.
  - Unplugging the Power Cord.
- Program is switched off in the case below.
  - Changing to a different function.
  - Turning off and on the unit.
  - Operating the numeric buttons on the remote control.

Displaying file information (ID3 TAG)

While playing an MP3 file containing file information, you can display the information by pressing **INFO** on the remote control.

Searching for a folder and an MP3/WMA file

1. Press **PRESET·FOLDER** ∧/∨ on the remote control repeatedly until a desired file appears in the display window.
2. Press ▶/II on the remote control or >/II on the unit to play it. The first file of the folder will be played.

Note

- USB/CD Folders/Files are recognized as below.

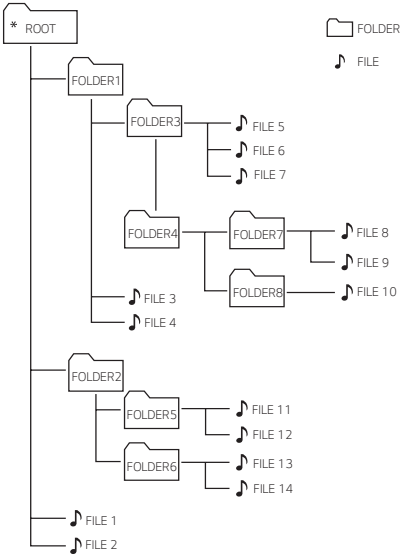

- If there is no file in a folder, the folder will not appear.
- Folders will be presented as the following order,
  ROOT → FOLDER 1 → FOLDER 3 → FOLDER 7 → FOLDER 8 → FOLDER 5 → FOLDER 6
- File will be played from ♪ file No.1 to ♪ file No.14 one by one.
- Files and folders will be presented in order recorded and may be presented differently according to the record circumstances.
- *ROOT : The first screen you can see when a computer recognize the USB/CD is "ROOT".

Deleting an MP3/WMA file

You can delete file, folder or format by pressing **DELETE** on the remote control. This function is supported only in stop status. (USB only)

1. -Select the file you want to delete and press **DELETE** on the remote control.

   -Select the folder you want to delete by pressing **PRESET·FOLDER** ∧/∨ on the remote control and press **DELETE** on the remote control.

   -Press and hold **DELETE** on the remote control to format the USB device.

   Or

   Press **DELETE** on the remote control repeatedly during selecting the MP3/WMA file.

   The display changes in the following order.

   - DEL FILE : Deletes file
   - DEL DIR : Deletes folder
   - FORMAT : Formats USB

2. To delete file/folder or format, press ▶/II on the remote control or >/II on the unit.

   If you want to exit the current mode, press ■ on the remote control or □ on the unit.

Caution

- Do not extract the USB device during operation. (play, delete, etc.)
- Regular back up is recommended to prevent data loss.
- The delete function may not be supported according to the USB status.

Turn off the sound temporarily

Press 🔇 on the remote control to mute your sound.

You can mute your unit, for example, to answer the telephone, the "MUTE" will appear in the display window.

To cancel it, press 🔇 on the remote control again or change the volume level.

DEMO

In the power off state, press **USB REC / DEMO** on the unit once. The unit will power on and display each function in the display window. To cancel the DEMO function, press **USB REC / DEMO** on the unit once more.

Note

- While in DEMO, this unit will keep DEMO status even if you unplug the power cord connection.
- You can enjoy other functions during the DEMO, the DEMO will temporarily pause.
  - Without input key in 10 sec, the DEMO will play back automatically.

Using Microphone

1. Connect your microphone to the MIC jack.
2. Play the music you want.
3. Sing along with the accompaniment.
   To adjust the microphone volume, press and hold **LIGHTING / MIC VOLUME** on the unit and then rotate **MASTER VOLUME** on the unit.

Note

- When not using the microphone, set the MIC VOL to minimum or turn off the MIC and remove the microphone from the MIC jack.
- If the microphone is set too near the speaker, a howling sound may be produced.
  In this case, move the microphone away from the speaker or decrease the sound level.
- If sound through the microphone is extremely loud, it may be distorted. In this case, press and hold **LIGHTING / MIC VOLUME** on the unit and then rotate **MASTER VOLUME** on the unit to minimum.
- If your microphone's sound feels not loud though MIC VOL is max, you can adjust only audio source volume lower.
  - Follow below step.
    1. Press and hold **VOICE CANCELLER** on the unit.
    2. Reduce Audio Source Volume by rotating **MASTER VOLUME** counter-clockwise on the unit. To initialize it, power off.

VOICE CANCELLER

You can enjoy the function while playing the music, by reducing singer vocal of music in the various source.

Press **VOICE CANCELLER** and "ON" will appear in display window.

To cancel it, press **VOICE CANCELLER** again.

The quality of the VOICE CANCELLER may be different depending on the recording conditions of music files.

Note

- This function is available CD, USB or BT (Bluetooth) function.
- If the function is not available, "NOT SUPPORT" appears in the display window.
- This function is available to use only when a microphone is connected.
- If a microphone is not connected, "NOT SUPPORT" appears in the display window.
- It is not available on the MONO source.
- To initialize it, change the function or disconnect the microphone.
- This function may not be initialized depending on the status of connected devices.

KEY CHANGER

You can adjust the key to 9 steps.
(4 steps higher, 4 steps lower and the original key.)

To sharp the key one by one, press the **KEY CHANGER** (#) repeatedly during playback.

To flatten the key one by one, press the **KEY CHANGER** (♭) repeatedly during playback.

Note

- This function is available CD, USB or BT (Bluetooth) function.
- If a microphone is not connected, "NOT SUPPORT" appears in the display window.
- To initialize it, change the function, disconnect the microphone or change the music.
- This function may not be initialized depending on the status of connected devices.

LIGHTING effect

The function is to create a Club like atmosphere by operating speaker lighting.

Press **LIGHTING / MIC VOLUME** on the unit.

OFF → PEACEFUL → ROMANTIC → COOL → UPBEAT → FIERY → EXCITED → DYNAMIC → HEALING → SUNNY → PARTY → OFF

Note

- Lighting function is available in all functions.
- Lighting mode retains its previous mode when you first press **LIGHTING / MIC VOLUME**, press again to change modes.

AUTO DJ playback

Auto DJ blends the end of one song into the beginning of another for seamless playback. It equalizes volume across tracks for uninterrupted playback.

Press **AUTO DJ** on the remote control or unit repeatedly, the display changes as followings.

AUTO DJ RANDOM → AUTO DJ SEQUENTIAL → AUTO DJ OFF

Mode	Display Window	Description
OFF	AUTO DJ OFF	-
RANDOM	AUTO DJ RANDOM	The music is played randomly on this mode.
REPEAT	AUTO DJ SEQUENTIAL	The music is played repeatedly on this mode.

Note

- AUTO DJ mode does not support searching for a section within a track/file or to play repeatedly or randomly.
- If you move to other functions or stop the music using ☐ on the unit (or ■ on the remote control) on AUTO DJ mode, AUTO DJ will be disable.
- AUTO DJ is not supported in the music file whose length is less than 60 seconds.
- During recording, AUTO DJ is not available.
- Only AUTO DJ SEQUENTIAL is selected when played programmed list.

Using a BLUETOOTH® wireless technology

About BLUETOOTH

Bluetooth is wireless communication technology for short range connection.

The sound may be interrupted when the connection has interference from other electronic devices or you connect a **Bluetooth** device from a different room. Connecting individual devices under **Bluetooth** wireless technology does not incur any charges. A mobile phone with **Bluetooth** wireless technology can be operated via the Cascade if the connection was made via **Bluetooth** wireless technology.

Available Devices : Mobile phone, MP3, Laptop, PDA.

BLUETOOTH Profiles

In order to use **Bluetooth** wireless technology, devices must be able to interpret certain profiles.This unit is compatible with following profile.

A2DP (Advanced Audio Distribution Profile)

Codec : SBC

Listening to music stored on the BLUETOOTH devices

Pairing your unit and BLUETOOTH device

Before you start the pairing procedure, make sure the **Bluetooth** feature is activated on your **Bluetooth** device. Refer to your **Bluetooth** device's user guide. Once a pairing operation is performed, it does not need to be performed again.

1. Turn on the unit.
2. Operate the **Bluetooth** device and perform the pairing operation. When searching for this unit with the **Bluetooth** device, a list of the devices found may appear in the **Bluetooth** device display depending on the type of **Bluetooth** device. Your unit appears as "LG CM5660(XX)".

Note

- XX means the last two digits of **Bluetooth** address. For example, if your unit has a **Bluetooth** address such as 9C:02:98:4A:F7:08, you will see "LG CM5660(08)" on your **Bluetooth** device.
- Depending on the **Bluetooth** device type, some devices may have a different pairing process. Enter the PIN code (0000) as needed.
- You can connect this unit with up to 3 **Bluetooth** devices simultaneously using the same method as described above, only in the **Bluetooth** function.
- The multi pairing connection is only supported on Android or iOS devices. (Multi pairing connection may not be supported depending on the connected device specifications.)
- Removable/detachable **Bluetooth** device (Ex : Dongle etc.) will not support multi pairing.

3. When this unit is successfully connected with your **Bluetooth** device, "PAIRED" appears on the display window and change to **Bluetooth** device name soon. Then "BT" will appear on the display window.

Note

- "PAIRED" will momentarily appear on the display when you connect other devices for multi pairing
- If the device name is unavailable, "_" will be displayed.

4. Listen to music.
   To play a music stored on your **Bluetooth** device, refer to your **Bluetooth** device's user guide.

Note

- When using **Bluetooth** technology, you have to make a connection between the unit and the **Bluetooth** device as close as possible and keep the distance.
  However, it may not work well in certain situations as described below:
  - There is a obstacle between the unit and the **Bluetooth** device.
  - There is a device using same frequency with **Bluetooth** technology such as a medical equipment, a microwave or a wireless LAN device.
- You should connect your **Bluetooth** device to this unit again when you restart it.
- Even if this unit connected up to 3 **Bluetooth** devices in the **Bluetooth** mode, you can play and control music by using only one of the connected devices.

Controls connected Bluetooth device

You can control connected Bluetooth device by the unit; play, pause, stop, skip.

Note

- Only Android OS and iOS is available to use this function.
- This function may not be supported depending on the Bluetooth device, or operated differently.

Note

- When this unit connected with multiple **Bluetooth** devices, only one device which you are playing keeps **Bluetooth** connection when you change the function to the others.
- The sound may be interrupted when the connection has interference from other electronic devices.
- Depending on the type of the device, you may not be able to use the **Bluetooth** function.
- You can enjoy wireless system using phone, MP3, Notebook, etc.
- The more distance between the unit and the **Bluetooth** device, the lower the sound quality becomes.
- **Bluetooth** connection will be disconnected when the unit is turned off or the **Bluetooth** device gets far from the unit.
- When **Bluetooth** connection is disconnected, connect the **Bluetooth** device to the unit again.
- When a **Bluetooth** device is not connected, "BT READY" appears on the display window.
- When you use **Bluetooth** function, adjust the volume to a proper level on the **Bluetooth** device.
- If it is not in **Bluetooth** function, only one device can be connected.
- If a **Bluetooth** device is connected when using LG TV, LG TV is disconnected and the **Bluetooth** device is connected.
- When you connect **Bluetooth** device (iOS device etc.) to this unit or operate the device, the volume level can be synchronized with each other.

Using the Music Flow Bluetooth App

Note

- Only Android OS is available to use "Music Flow Bluetooth" app with this unit.
- It is recommended to use the latest version of app.

About "Music Flow Bluetooth" App

"Music Flow Bluetooth" app brings a suite of new features to this unit.

To enjoy more features, you are recommended to download and install free "Music Flow Bluetooth" app.

Here is introduce a few of the many features of "Music Flow Bluetooth" app.

Multi Juke box : Your entertainment increases three fold when you connect up to 3 **Bluetooth** phones at the same time. Play music from all three phone and create a customized playlist from all the phones.

Install "Music Flow Bluetooth" App onto Your Bluetooth Device

There are two ways to install "Music Flow Bluetooth" App onto your **Bluetooth** device.

Install "Music Flow Bluetooth" App through QR code

1. Install "Music Flow Bluetooth" app through QR code. Use the scanning software to scan the QR code.

(Android OS)

2. Tap an icon for installation.
3. Tap an icon for downloading.

Note

- Make sure that your **Bluetooth** device is connected to the Internet.
- Make sure that your **Bluetooth** device has a scanning software application. If you don't have one, download one from "Google Android Market (Google Play Store)".
- Depending on area, QR code may not work.

Install "Music Flow Bluetooth" App through "Google Android Market (Google Play Store)"

1. Tap the "Google Android Market (Google Play Store)" icon.
2. In the search bar, type in the "Music Flow Bluetooth" and search it.
3. In the search result list, find and tap "Music Flow Bluetooth" to start downloading **Bluetooth** app.
4. Tap an icon for installation.
5. Tap an icon for downloading.

Note

- Make sure that your **Bluetooth** device is connected to the Internet.
- Make sure that your **Bluetooth** device is equipped with "Google Android Market (Google Play Store)".

Activate Bluetooth with "Music Flow Bluetooth" App

"Music Flow Bluetooth" app helps to connect your **Bluetooth** device to this unit.

1. Tap "Music Flow Bluetooth" app icon on the home screen to open "Music Flow Bluetooth" app, and go to the main menu.
2. Tap [Menu] and select the unit you want.
3. If you want to get more information to operate, tap [Help] on the [Setting] menu.

Note

- "Music Flow Bluetooth " app will be available in the software version as follow;
  - Android O/S : Ver 4.0.3 (or later)
- If you use "Music Flow Bluetooth" app for operation, there would be some differences between "Music Flow Bluetooth" app and the supplied remote control. Use the supplied remote control as necessary.
- Depending on the **Bluetooth** device, "Music Flow Bluetooth " app may not work.
- After connection of "Music Flow Bluetooth" app, music may be output from your device. In this case, try connecting procedure again.
- If you operate the other applications or change the settings on your **Bluetooth** device while using "Music Flow Bluetooth" app, "Music Flow Bluetooth" app may operate abnormally.
- When "Music Flow Bluetooth" app operates abnormally, check your **Bluetooth** device and the connection of "Music Flow Bluetooth" app and then try to connect again.
- Depending on the smart phone's operating system, you have some differences for "Music Flow Bluetooth" operation.
- Check **Bluetooth** setting on your **Bluetooth** device if "Music Flow Bluetooth" App connection does not work well.

Radio Operations

Be sure that FM antenna is connected.
(Refer to page 14)

Listening to the radio

1. Press **F** on the remote control or **F / WIRELESS LINK** on the unit until FM appears in the display window.
   The last received station is tuned in.
2. Auto tuning :
   Press and hold **TUNING -/+** on the remote control or **I<< / >>I** on the unit for about two seconds until the frequency indication starts to change, then release. Scanning stops when the unit tunes in a station.

   Or

   Manual tuning :
   Press **TUNING -/+** on the remote control or **I<< / >>I** on the unit repeatedly.
3. Adjust the volume by rotating volume knob on the unit or by pressing **VOL +/-** on the remote control repeatedly.

Improving poor FM reception

Press **>/II** on the unit or **►/II** on the remote control. This will change the Tuner from stereo to mono and usually improve the reception.

Presetting the Radio Stations

You can preset 50 stations for FM.
Before tuning, make sure to turn down the volume.

1. Press **F** on the remote control or **F / WIRELESS LINK** on the unit until FM appears in the display window.
2. Select the desired frequency by pressing **TUNING -/+** on the remote control or **I<< / >>I** on the unit.
3. Press **PROGRAM/MEMORY** on the remote control. A preset number will blink in the display window.
4. Press **PRESET·FOLDER ∧ / ∨** on the remote control to select the preset number you want.
5. Press **PROGRAM/MEMORY** on the remote control. The station is stored.
6. Repeat steps 2 to 5 to store other stations.
7. To listen to a preset station, press **PRESET·FOLDER ∧ / ∨** or **0** to **9** numerical buttons on the remote control.

Deleting all the saved stations

1. Press and hold **PROGRAM/MEMORY** on the remote control for two seconds.
   "ERASEALL" will flash up on the unit display.
2. Press **PROGRAM/MEMORY** on the remote control to erase all the saved radio stations.

Sound adjustment

Setting the surround mode

This system has a number of pre-set surround sound fields. The displayed items for the equalizer may be different depending on sound sources and effects.

You can select a desired sound mode by using **SOUND EFFECT** on the remote control.

On Display	Description
POP CLASSIC JAZZ ROCK	This program lends an enthusiastic atmosphere to the sound, giving you the feeling you are at an actual rock, pop, jazz or classic concert.
BASS	Reinforces the treble, bass and surround sound effect.
FOOT BALL	You can enjoy the sound effect FOOTBALL STADIUM.
STANDARD	You can enjoy optimized sound.

You can select a desired sound mode by using **REGION EQ** on the remote control or **REGION EQ / BASS BLAST** on the unit.

On Display	Region	Description
FUNK, REGUETON, SAMBA, BANDA, MERENGUE, AXE, SALSA, SERTANEJ, CUMBIA, TECNO BR, FORRO	Latin America	Optimized sound effect for the music genre preferred in each region.
ARABIC	Middle East	
DANGDUT	Indonesia	
AFRO	Africa	
INDIA	India	

Note

- On some speakers, sound may not be heard or heard in low sound depending on the sound mode.
- By pressing and holding **REGION EQ / BASS BLAST** on the unit, you can enjoy bass sound effect.

Advanced Operations

Recording to USB

You can record a various sound source to USB.
(CD, USB, AUX, PORTABLE, FM)

1. Connect the USB device to the unit.
2. Select a function by pressing **F** on the remote control or **F / WIRELESS LINK** on the unit.

   One track/file recording - You can record to USB after playing a track/file you want.

   All tracks/files recording - You can record to USB after full stop status.

   Programmed list recording - After showing the programmed list, you can record it to USB. (Refer to page 17)
3. Start the recording by pressing **USB REC** on the remote control or **USB REC / DEMO** on the unit.

   -If you connect both USB1 and USB2, press **USB REC** on the remote control or **USB REC / DEMO** on the unit when USB1 or USB2 which you want to record blinks in the display window.
4. To stop recording, press ■ on the remote control or ☐ on the unit.

Pausing recording

During recording, press ▶/II on the remote control or >/II on the unit to pause recording. Press it again to restart recording.
(AUX, PORTABLE, FM only)

Note

- VOICE CANCELLER or KEY CHANGER will be reset, if you use recording function during operating VOICE CANCELLER or KEY CHANGER.
- VOICE CANCELLER or KEY CHANGER can not be operated during recording.

To select recording bit rate and speed

1. Press **USB REC** on the remote control or **USB REC / DEMO** on the unit for longer than 3 seconds.
2. Use **I◀◀ / ▶▶I** on the remote control or **I<< / >>I** on the unit to select the bit rate.
3. Press **USB REC** on the remote control or **USB REC / DEMO** on the unit again to select the recording speed.
4. Press **I◀◀ / ▶▶I** on the remote control or **I<< / >>I** on the unit to select a desired recording speed : (AUDIO CD only)

   X1 SPEED
   - You can listen to music while recording it.

   X2 SPEED
   - You can just record the music file.
5. Press **USB REC** on the remote control or **USB REC / DEMO** on the unit to finish the setting.

USB copying

You can copy various sound source in USB1 to USB2 on USB function.

1. Connect USB device including desired sound files to USB1 and select USB1 function.
2. Connect another USB device to USB2.
3. Start the recording by pressing **USB REC** on the remote control or **USB REC / DEMO** on the unit.
4. To stop recording, press ■ on the remote control or ☐ on the unit.

The making of unauthorized copies of copy-protected material, including computer programs, files, broadcasts and sound recordings, may be an infringement of copyrights and constitute a criminal offense. This equipment should not be used for such purposes.
Be responsible
Respect copyrights

Note

- You can check the recording percentage rate for the USB record on the display window during the recording.
  (MP3/WMA file or Audio CD Only)
- During recording MP3/WMA, there is no sound.
- When you stop recording during playback, the file that has been recorded at that time will be stored. (Except MP3/WMA files)
- Do not remove the USB device or turn off the unit during USB recording. If does not, an incomplete file may be made and not deleted on PC.
- If USB recording does not work, the message like "NO USB", "ERROR", "USB FULL", "NOT SUPPORT" or "FILE MAX" is displayed on the display window.
- Multi card reader device or External HDD can not be used for USB recording.
- A file is recorded by about 512 Mbyte when you record for a long term.
- You may not store more than 2,000 files.
- You can not record in AUTO DJ mode.
- In case of the unsupported MP3/WMA file, the file recording may be stopped.
- It'll be stored as follows.

AUDIO CD	MP3/WMA
CD_REC TRACK_0001 TRACK_0002 -	FILE_REC ABC(File name) DEF(File name) -
The other source*	Tuner
OTHERS_REC AUDIO_0001 AUDIO_0002 -	TUNER_REC AUDIO_0001_107-7FM AUDIO_0002_520AM -

* : AUX and the like.

Tuner : The current recording frequency is shown.

Setting the Clock

1. Turn the unit on.
2. Press and hold **CLOCK** on the remote control.
3. Select time mode by pressing **⏮ / ⏭** on the remote control.
   - AM 12:00 (for an AM and PM display) or 0:00 (for a 24 hour display)
4. Press **SET** on the remote control to confirm your selection.
5. Select the hours by pressing **⏮ / ⏭** on the remote control.
6. Press **SET** on the remote control.
7. Select the minutes by pressing **⏮ / ⏭** on the remote control.
8. Press **SET** on the remote control.

Setting the Clock through "Music Flow Bluetooth" App

Install "Music Flow Bluetooth" app on your Android device. (Refer to page 24)

Your unit's clock will be automatically synchronized with your device by activating **Bluetooth** connection through "Music Flow Bluetooth" app.

Using your player as an alarm clock

1. Turn the unit on.
2. Press and hold **ALARM** on the remote control.
3. Press **⏮ / ⏭** on the remote control to change the hours and minutes and press **SET** on the remote control to save.
4. Press **⏮ / ⏭** on the remote control to select function and press **SET** on the remote control to save.
   - Press **⏮ / ⏭** to select a memory No. when you select Tuner and then, press **SET** on the remote control. If there is no memory No., this step is skipped.
5. Press **⏮ / ⏭** on the remote control to change the volume and press **SET** on the remote control to save.

Note

- If you set the clock time, you can check the time by pressing **CLOCK** on the remote control even when the player is turned off.
- You can set alarm after you set the clock time.
- If you set the clock time and alarm, you can check the alarm setting information by pressing **ALARM** on the remote control even when the unit is turned off.
- You can select ALARM on/off mode by pressing **ALARM** on the remote control.

Sleep Timer Setting

Press **SLEEP** on the remote control repeatedly to select delay time between 10 and 180 minutes. After the delay time, the unit will be turned off.

To cancel the sleep function, press **SLEEP** on the remote control repeatedly until "SLEEP 10" appears, and then press **SLEEP** on the remote control once again while "SLEEP 10" is displayed.

Note

- You can check the remaining time before the unit is turned off.
- Press **SLEEP** on the remote control. The remaining time appears in the display window.

Dimmer

Press **SLEEP** on the remote control once. The display window will be darkened by half. To cancel it, press **SLEEP** on the remote control repeatedly until dim off.

Note

All the LED turns off when Dimmer is being operated.

Auto power down

This unit will turn itself off to save electricity in the case were the main unit is not connected to an external device and is not used for 20 minutes.

The unit will also turn itself off after six hours if the Main unit has been connected to another device using the analog inputs.

Auto power down function is applied to only MASTER unit in case of WIRELESS PARTY LINK connection. In case of SLAVE unit, Auto power down is available after disconnection SLAVE unit and MASTER unit.

How to disconnect the wireless network connection or the wireless device

Turn off the unit by pressing the power button for more than 5 seconds.

AUTO POWER On

This unit automatically turns on by an input source : LG TV or **Bluetooth**

If you try to connect your **Bluetooth** device, this unit turns on and connect your **Bluetooth** device. You can play your music.

Note

- Depending on the connected device, this function may not operate.
- Depending on the connected device, the unit turns on but **Bluetooth** function may not be connected.
- If you disconnect **Bluetooth** connection by this unit, some **Bluetooth** devices try to connect to the unit continually. Therefore it is recommended to disconnect the connection before turning off the unit.
- If you try to connect to the "Music Flow Bluetooth" app, **Bluetooth** function of this unit is turned on.
- If you turn on the unit using LG TV or **Bluetooth** function, proper function of this unit is turned on.
- If you have already paired with this unit, automatically this unit can turn on by an input source when this unit is turned off.
- If you turn off the unit by pressing the power button for more than 5 seconds, AUTO POWER On function is disabled.
  To activate it, turn on the unit.

Auto function change

This unit recognizes input signals such as **Bluetooth** and LG TV or connected portable device, and then changes suitable function automatically.

When you try to connect Bluetooth device

When you try to connect your **Bluetooth** device to this unit, **Bluetooth** function is selected. Play your music on the **Bluetooth** device.

When PORT.IN connection is connected

When you connect the portable device to the **PORT.IN** connector, PORTABLE function is selected. Play your music on the portable device.

When LG TV is connected

When you turn on your LG TV connected by LG Sound Sync, this unit changes the function to LG TV. You can hear the sound from your TV.

Note

- This function is not available during recording or deleting.
- This function only works with devices that were previously connected.

LG Sound Sync

Sound Sync
Wireless

You can control some functions of this unit by your TV's remote control with LG Sound Sync. It is compatible with LG TV that supports LG Sound Sync. Make sure your TV has the LG Sound Sync logo.

Controllable function by LG TV's remote control : Volume up/down, mute

Refer to the TV's instruction manual for the details of LG Sound Sync.

1. Turn on the unit by pressing ⏻ on the remote control or ⏻/❙ on the unit.
2. Press **F** on the remote control or **F / WIRELESS LINK** on the unit. until LG TV function is selected.
3. Set up the sound output of TV to listen to the sound through this unit :
   TV setting menu → [Sound] → [TV Sound output] → [LG Sound Sync (Wireless)]

   "PAIRED" appears on the display window for about 3 seconds and then you can see "LG TV" on the display window if connecting normally between this unit and your TV.

Note

- You can also use the remote control of this unit while using LG Sound Sync. If you use TV's remote control again, the unit synchronizes with the TV.
- If the connection fails, check the conditions of this unit and your TV : power, function.
- Make sure of the condition of this unit and the connection in the cases below when using LG Sound Sync.
  - Turned off the unit.
  - Changing the function to the others.
  - Disconnecting the wireless connection caused by interference or a distance.
- The amount of time to turn off this unit is different depending on your TV.
- Details of TV setting menu vary depending on the manufacturers or models of your TV.
- If you connect LG Sound Sync when "Music Flow Bluetooth" app is connected, control through the app is available.
- If you turned off the unit directly by pressing ⏻ on the remote control or ⏻/❙ on the unit, LG Sound Sync will be disconnected. To use this function again, you should reconnect the TV and the unit.
- If an LG TV is connected when using **Bluetooth**, **Bluetooth** is disconnected and the LG TV is connected.
- If you try to change the function on using the LG TV function, volume will be changed according to the LG TV volume level.
- The volume may be increased when the TV and this unit is connected by LG Sound Sync. Decrease the TV volume and then connect with this unit.

WIRELESS PARTY LINK Connection

The output sound of Ⓐ (MASTER) unit is expanded to Ⓑ (SLAVE) unit.
It is compatible with unit that supports WIRELESS PARTY LINK.
The name of function about sound expansion between the compatible products wired or wirelessly was changed to PARTY LINK or WIRELESS PARTY LINK.

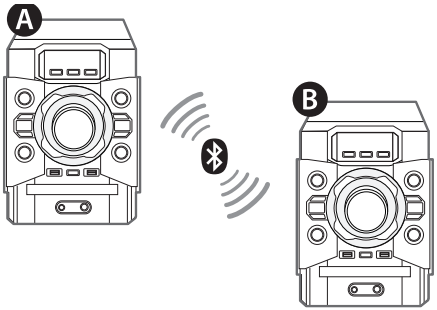

1. Press and hold **F / WIRELESS LINK** on the unit for 3 seconds. PARTY LINK MODE SELECT appears in the display window.
2. Press **|<< / >>|** on the unit to select MASTER or SLAVE.
   - Ⓐ unit : Selects MASTER.
   - Ⓑ unit : Selects SLAVE.

   Two units try to connect with each other.
3. When this unit is successfully connected each other, "Slave Device Name CONNECTED" appears in the MASTER unit. "CONNECTED TO Master Device Name" appears in the SLAVE unit and change to SLAVE soon.

Note

- If you using the LG Sound Sync, this function is not available. If you connect the LG TV function, "NOT SUPPORT" appears in the display window.
- When WIRELESS PARTY LINK is disconnected, SLAVE unit is changed to BT function.
- If the connection is failed, "FAILED" appears in the display window.
- Mute function is synchronized with each other.
- WIRELESS PARTY LINK connection will be disconnected when you turn off the unit or press and hold **F / WIRELESS LINK** on the unit for 3 seconds.
- Sound of MASTER unit and SLAVE unit may be different depending on playback status or source.
- Check the following information when connecting to **Bluetooth**.
  - You can connect only one **Bluetooth** device in the MASTER unit. you cannot connect **Bluetooth** device to the SLAVE unit.
  - WIRELESS PARTY LINK connection is only supported on Android or iOS devices. (WIRELESS PARTY LINK connection may not be supported depending on the connected device specifications or OS.)
  - Removable/detachable **Bluetooth** devices (ex. Dongle etc.) will not support WIRELESS PARTY LINK connection.
  - When WIRELESS PARTY LINK is connected, **Bluetooth** connection is not available in status of recording or deleting.

Troubleshooting

Problem	Cause & Correction
The unit does not work properly.	• Turn off the power of this unit and the connected external device (TV, Woofer, DVD-player, Amplifier, etc.) and turn it on again. • Disconnect the power cord of this unit and the connected external device (TV, Woofer, DVD-player, Amplifier, etc.) and then try connecting again. • Previous setting may not be saved when device power is shut off.
No Power.	• The power cord is not plugged in. Plug in the power cord. • Check whether electricity failed. Check the condition by operating other electronic devices.
No sound.	• Check whether you select right function. Press function button and check the selected function. • Check to see if the Speakers are connected correctly. Speaker cables connected correctly.
The unit does not start playback.	• An unplayable disc is inserted. Insert a playable disc. • No disc is inserted. Insert a disc. • The disc is dirty. Clean the disc. (Refer to page 38) • The disc is inserted upside down. Place the disc with the label or printed side facing upwards.
Radio stations cannot be tuned in properly.	• The antenna is positioned or connected poorly. Connect the antenna securely. • The signal strength of the radio station is too weak. Tune to the station manually. • No stations have been preset or preset stations have been cleared. (when being tuned by scanning preset channels) Preset some radio stations, see page 26 for details.
The remote control does not work properly.	• The remote control is too far from the unit. Operate the remote control within about 23 ft (7 m). • There is an obstacle in the path of the remote control and the unit. Remove the obstacle. • The batteries in the remote control are exhausted. Replace the batteries with new ones.
LG Sound Sync does not work.	• Check whether your LG TV supports LG Sound Sync. • Check connection of LG Sound Sync. • Check sound setting of your TV and this unit.

General specifications

General	
Power requirements	Refer to the main label on the unit.
Power consumption	Refer to the main label on the unit.
	Networked standby : 0.5 W (If all network ports are activated.)
Dimensions (W x H x D)	Approx. 207 mm x 282 mm x 261 mm
Net Weight	Approx. 3.5 kg
Operating temperature	5 °C to 35 °C
Operating humidity	5 % to 90 %

Inputs	
Analog audio in (AUX IN)	2.5 Vrms (1 kHz, 0 dB), 75 Ω, RCA jack (L, R)
Portable in (PORT. IN)	1.4 Vrms (3.5 mm stereo jack) x 1
Microphone (MIC)	Sensitivity 20 mV (1 kHz), 6.3 mm jack x 1

Tuner	
FM Tuning Range	87.5 to 108.0 MHz or 87.50 to 108.00 MHz

System	
Frequency Response	70 to 20,000 Hz
Signal-to-noise ratio	More than 75 dB
Dynamic range	More than 75 dB
Bus Power Supply (USB)	5 V ⎓ 500 mA

Amplifier (RMS Output power)	
Total	700 W
Front	350 W x 2 (4 Ω at 1 kHz, 20 % THD)

Speaker specifications

Front speaker	
Type	2 Way 2 Speaker
Impedance	4 Ω
Rated Input Power	350 W
Max. Input power	700 W
Net Dimensions (W x H x D)	Approx. 299 mm x 363 mm x 230 mm
Net Weight	Approx. 5 kg

- Design and specifications are subject to change without notice.

Maintenance

Handling the Unit

When shipping the unit

Please save the original shipping carton and packing materials. If you need to ship the unit, for maximum protection, re-pack the unit as it was originally packed at the factory.

Keeping the exterior surfaces clean

Do not use volatile liquids such as insecticide spray near the unit.

Wiping with strong pressure may damage the surface.

Do not leave rubber or plastic products in contact with the unit for a long period of time.

Cleaning the unit

To clean the player, use a soft, dry cloth. If the surfaces are extremely dirty, use a soft cloth lightly moistened with a mild detergent solution. Do not use strong solvents such as alcohol, benzine, or thinner, as these might damage the surface of the unit.

Maintaining the Unit

The unit is a high-tech, precision device. If the optical pick-up lens and disc drive parts are dirty or worn, the picture quality could be diminished. For details, please contact your nearest authorized service center.

Notes on Discs

Handling Discs

Never stick paper or tape on the disc.

Storing Discs

After playing, store the disc in its case. Do not expose the disc to direct sunlight or sources of heat and never leave it in a parked car exposed to direct sunlight.

Cleaning Discs

Do not use strong solvents such as alcohol, benzine, thinner, commercially available cleaners, or anti-static spray intended for old vinyl records.

Trademarks and Licenses

Bluetooth®

The ***Bluetooth®*** word mark and logos are owned by the Bluetooth SIG, Inc. and any use of such marks by LG Electronics is under license.

Other trademarks and trade names are those of their respective owners.

LG

Life's Good