Scan to see the online manual.

OWNER'S MANUAL

FRENCH DOOR REFRIGERATOR

Read this owner's manual thoroughly before operating the appliance and keep it handy for reference at all times.

ENGLISH

LF21C6200*, LF21G6200*, LF21G6201*, LF21C6000*, LF25S6206*, LF25H6200*, LF25S6200*, LF25S6000*

MFL05738301
Rev.04_100126

www.lg.com

Copyright © 2025-2026 LG Electronics. All Rights Reserved

TABLE OF CONTENTS

3 IMPORTANT SAFETY INSTRUCTIONS

3 READ ALL INSTRUCTIONS BEFORE USE
3 WARNING
6 CAUTION

7 PRODUCT OVERVIEW

7 Product Features

11 INSTALLATION

11 Before Installing
12 Choosing the Proper Location
15 Removing/Assembling Handles
15 Removing/Assembling Doors and Drawers
21 Connecting Refrigerator to Water Supply
22 Leveling and Door Alignment
24 Turning on the Power

25 OPERATION

25 Before Use
26 Control Panel
28 Sabbath Mode
29 InstaView
29 Automatic Icemaker
31 Storing Food
33 Crisper Drawers
33 Glide'N'Serve
33 Refrigerator Shelves
35 Door-in-Door
35 Door Bins
35 Durabase

37 SMART FUNCTIONS

37 LG ThinQ Application
39 Smart Grid Function
40 Smart Diagnosis™ Feature

42 MAINTENANCE

42 Cleaning
43 Air Filter
43 Water Filter

48 TROUBLESHOOTING

48 FAQs
49 Before Calling for Service

57 LIMITED WARRANTY

57 USA
61 CANADA

IMPORTANT SAFETY INSTRUCTIONS

READ ALL INSTRUCTIONS BEFORE USE

Safety Messages

Your safety and the safety of others are very important.

We have provided many important safety messages in this manual and on your appliance. Always read and follow all safety messages.

This is the safety alert symbol.

This symbol alerts you to potential hazards that can kill or injure you and others. All safety messages will follow the safety alert symbol and either the word WARNING or CAUTION.

These words mean:

WARNING

You may be killed or seriously injured if you do not follow instructions.

CAUTION

You may be injured or cause damage to the product if you do not follow instructions.

All safety messages will tell you what the potential hazard is, tell you how to reduce the chance of injury, and tell you what may happen if the instructions are not followed.

WARNING

WARNING

- To reduce the risk of explosion, fire, death, electric shock, scalding or injury to persons when using this product, follow basic precautions, including the following:

Installation

- To reduce the risk of injury to persons, adhere to all industry recommended safety procedures including the use of long-sleeved gloves and safety glasses.
- Never attempt to operate this appliance if it is damaged, malfunctioning, partially disassembled, or has missing or broken parts, including a damaged cord or plug.
- Only connect this product to a dedicated grounded electrical outlet rated for use with this product (115 V, 60 Hz, AC only). It is the user’s responsibility to replace a standard 2-prong wall outlet with a standard 3-prong wall outlet.
- Do not use an outlet that can be turned off with a switch. Do not use an extension cord.
- The appliance must be positioned for easy access to a power source.
- When moving the refrigerator, be careful not to roll over or damage the power cord.
- Contact an authorized service center when installing or relocating the refrigerator.
- Do not, under any circumstances, cut or remove the third (ground) prong from the power cord.
- Keep packing materials out of the reach of children. Packaging material can be dangerous for children. There is a risk of suffocation.
- Do not install the refrigerator in a damp or dusty place where insulation on electrical parts may deteriorate.
- Do not place the refrigerator in direct sunlight or expose it to the heat from heating appliances such as stoves or heaters.

- Do not bend or pinch the power cord excessively or place heavy objects on it.
- When positioning the appliance, ensure the supply cord is not trapped or damaged.
- Do not locate multiple portable socket-outlets or portable power supplies at the rear of the appliance.

Operation

- This appliance is intended to be used in household and similar applications such as:
  - staff kitchen areas in shops, offices and other working environments;
  - farm houses and by clients in hotels, motels and other residential type environments;
  - bed and breakfast type environments;
  - catering and similar non-retail applications.
- This appliance is not for use in portable or mobile installations, such as marine or RV uses, where it will be in motion while operating.
- This appliance is not intended for use by persons (including children) with reduced physical, sensory or mental capabilities, or lack of experience and knowledge, unless they have been given supervision or instruction concerning use of the appliance by a person responsible for their safety.
- This product is not to be used for special purposes such as the storage of medicine or test materials or for use on ships, etc.
- DO NOT allow children to climb, stand, or hang on the refrigerator doors or on the shelves in the refrigerator. They could damage the refrigerator and seriously injure themselves.
- Do not allow children to climb into the refrigerator. They could be trapped and suffocated.
- Children should be supervised to ensure that they do not play with the refrigerator.
- Keep fingers out of pinch point areas; clearances between the doors and cabinets are necessarily small. Be careful closing doors when children are nearby.
- Do not touch frozen food or the metal parts in the freezer compartment with wet or damp hands. Doing so may cause frostbite.
- Do not refreeze frozen food that has thawed completely. Doing so may result in a serious health hazard.
- Do not use an adapter plug or plug the power plug into a multi-outlet extension cord.
- If the supply cord is damaged, it must be replaced by the manufacturer or its service agent or a similarly qualified person in order to avoid a hazard.
- Do not operate the refrigerator or touch the power cord with wet hands.
- Do not modify or extend the power cord.
- Do not use an uncertified power outlet. Do not plug the appliance into a damaged wall outlet.
- Do not put hands, feet or other objects into the air vents or bottom of the refrigerator. Doing so could result in personal injury or electric shock.
- In the event of a gas leak (propane/LPG), ensure the area is adequately ventilated and contact an authorized service center before resuming use. Do not touch the refrigerator or power cord of the refrigerator.
- Disconnect the power cord immediately and contact an authorized service center if there is a strange noise, odor, or smoke coming from the appliance.
- Do not use any fuse (such as copper, steel wire, etc.) other than a standard fuse.
- Do not put animals inside the appliance.
- Do not place heavy or fragile objects, liquid filled containers, combustible substances, or flammable objects (such as candles and lamps) on the appliance.
- If connected to a circuit protected by fuses, use time delay fuse.
- Keep ventilation openings, in the appliance enclosure or in the built-in structure, clear of obstruction.
- Do not use mechanical devices or other means to accelerate the defrosting process, other than those recommended by the manufacturer.

- Do not use electrical appliances inside the food storage compartments of the appliance, unless they are of the type recommended by the manufacturer.
- Do not store explosive substances such as aerosol cans with a flammable propellant in this appliance.
- Do not damage the refrigerant circuit.
- This appliance incorporates an earth connection for functional purposes.
- Connect to potable water supply only.
  - If connected to a water supply, connect to a potable water supply only.
- Fill with potable water only.
  - If using an icemaker or dispenser water tank, make sure to fill it with potable water only.

Maintenance

- Do not use a hair dryer to dry the inside of the refrigerator.
- Do not light a candle to remove odors in the refrigerator.
- In the event of a refrigerant leak, move flammable objects away from the refrigerator. Ensure the area is adequately ventilated and contact an authorized service center.
- Keep flammable materials and vapors, such as gasoline, away from the refrigerator.
- Unplug the power plug before cleaning or repairing the refrigerator.
- The refrigerator and freezer compartment lights are interior LED lighting, and service should be performed by a qualified technician.
- Unplug the power plug immediately in the event of a blackout or thunderstorm.
- Turn the power off if water or dust penetrates into the refrigerator. Call a service agent.
- Do not store glass containers or soda in the freezer compartment. Contents may expand when frozen, break the container and cause injury.
- Do not store, disassemble or repair the appliance yourself or allow unqualified personnel to do so.

Disposal

- Risk of child entrapment. Junked or abandoned refrigerators are dangerous, even if they are sitting for only a few days. When disposing of the refrigerator, remove the packing materials from the door or take off the doors but leave the shelves in place so that children may not easily climb inside.
- If disposing of a refrigerator, make sure the refrigerant and insulation foam are removed for proper disposal by a qualified servicer. If you release the refrigerant or throw away the insulation foam, you may be fined or imprisoned in accordance with the relevant environmental law. Insulation foam contains flammable blowing gas.
- When discarding the appliance, remove the door gasket while leaving the shelves and bins in place, and keep children away from the appliance.

Grounding Instructions

- Improper connection of the equipment-grounding conductor can result in a risk of electric shock. Check with a qualified electrician or service personnel if you are in doubt whether the appliance is properly grounded. Do not modify the plug provided with the appliance; if it will not fit the outlet, have a proper outlet installed by a qualified electrician.
- Have a certified electrician check the wall outlet and wiring for proper grounding.
- Never unplug the appliance by pulling on the power cord. Always grip the plug firmly and pull straight out from the outlet. Failure to do so may damage the power cord, resulting in a risk of fire and electric shock.

Risk of Fire and Flammable Materials

These symbols alert you to flammable materials that can ignite and cause a fire if you do not take care.

This appliance contains a small amount of isobutane refrigerant (R600a), which is combustible. When transporting and installing the appliance, care should be taken to ensure that no parts of the refrigerating circuit are damaged. Refrigerant squirting out of the pipes could ignite or cause an eye injury. If a leak is detected, avoid any naked flames or potential sources of ignition and air out the room in which the appliance is standing for several minutes.

In order to avoid the creation of a flammable gas air mixture if a leak in the refrigerating circuit occurs, the size of the room in which the appliance may be sited depends on the amount of refrigerant used. The room must be 10.8 square feet (1 square meter) in size for every 8g of R600a refrigerant inside the appliance. The amount of refrigerant in your particular appliance is shown on the identification plate inside the appliance. Never start up an appliance showing any signs of damage. If in doubt, consult your dealer.

CAUTION

⚠ CAUTION

- To reduce the risk of minor or moderate injury to persons, malfunction, or damage to the product or property when using this product, follow basic precautions, including the following:

Installation

- Do not install the refrigerator where there may be a danger of the unit falling.
- The refrigerator must be properly installed in accordance with the Installation Instructions.

Operation

- Do not use aerosols near the refrigerator.
- This appliance is intended to be used only in domestic and similar applications.
- Do not strike or apply excessive force to any glass surface. Do not touch glass surfaces if they are cracked or broken. You may be injured.
- Do not overfill or pack items too tightly into door bins. Doing so may cause damage to the bin or personal injury if items are removed with excessive force.

Maintenance

- Do not use strong detergents like wax or thinners for cleaning. Clean with a soft cloth.
- Remove foreign objects (such as dust and water) off the prongs of the power plug and contact areas. Do not use a wet or damp cloth when cleaning the plug.
- Do not spray water directly on the inside or outside of the refrigerator.
- Do not clean glass shelves or covers with warm water when they are cold. They may break if exposed to sudden temperature changes.

SAVE THESE INSTRUCTIONS

PRODUCT OVERVIEW

Product Features

The images in this guide may be different from the actual components and accessories, which are subject to change by the manufacturer without prior notice for product improvement purposes.

Exterior

† This feature is only available on some models.

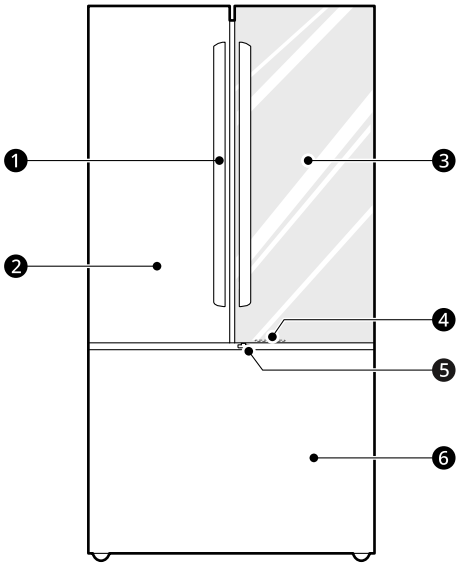

❶ **Handle**†
Opens and closes the refrigerator door.

❷ **Refrigerator**
Fresh food compartment

❸ **InstaView Door-in-Door**†
The **InstaView Door-in-Door** compartment allows for easy access to commonly used food items.

❹ **LED Light**
LED lights up when the freezer door is opened.

❺ **Door-in-Door Lever**†
Opens Door-in-Door.

❻ **Freezer**
Frozen food compartment

Interior

† This feature is only available on some models.

Standard Door Model:

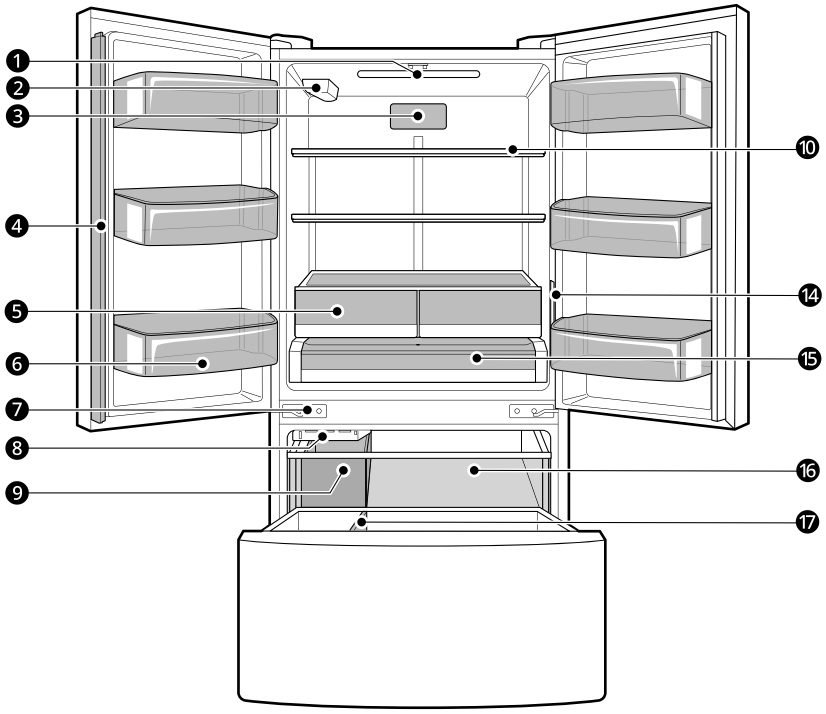

InstaView Door-in-Door Model:

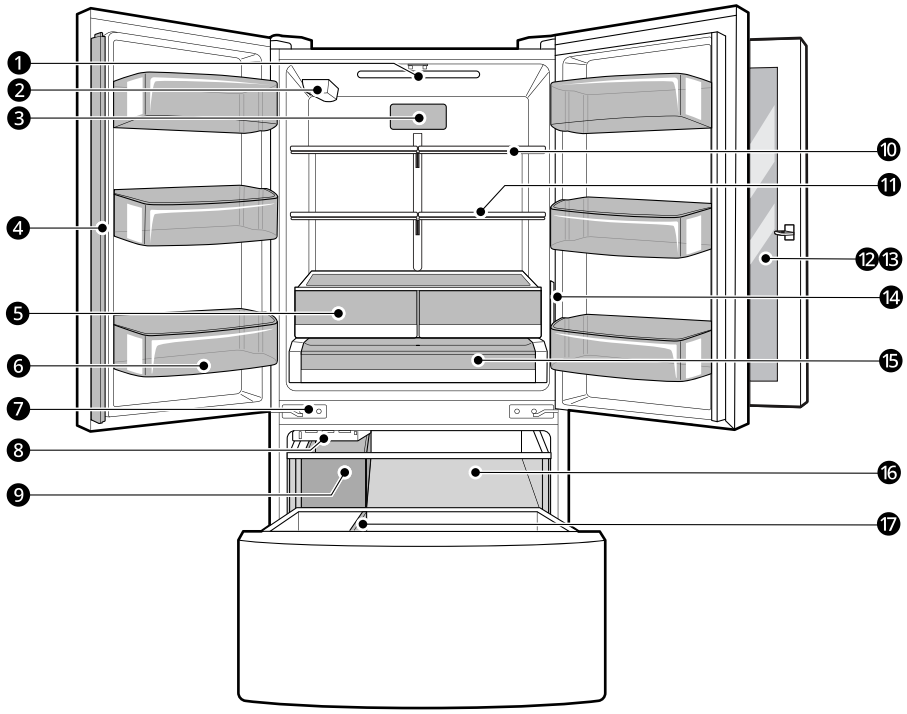

❶ **LED Interior Lighting**

Lights up the inside of the refrigerator.

❷ **Water Filter**†

Purifies water. Replace the water filter every six months. See the Replacing the Water Filter section in this manual for details.

❸ **Air Filter**†

Reduces odors inside the refrigerator compartment.

❹ **Door Mullion**

Prevents the cold air in the refrigerator from escaping when the doors are closed.

⚠ CAUTION

- To reduce the risk of scratching the door or breaking the center door mullion, make sure that the folding door mullion is folded in before closing the left-hand door.
- The door alarm will sound every 30 seconds if the door remains open longer than one minute.

❺ **Crisper Drawer**†

Helps vegetables and fruit to stay crisp.

❻ **Fixed Door Bin**

Stores chilled food or drinks.

❼ **Auto-Closing Hinge**†

The refrigerator doors and freezer drawers close automatically when pushed slightly. (The door only closes automatically when it is open at an angle of less than 30°.)

❽ **Automatic Icemaker (Freezer)**†

Produces ice automatically.

❾ **Ice Bin**†

If a large amount of ice is needed, transfer the ice in the in-door ice bin to an ice storage bin in the freezer.

❿ **Adjustable Refrigerator Shelf**

The refrigerator shelves are adjustable to meet individual storage needs.

⓫ **Folding Shelf**†

Store taller items, such as gallon containers or bottles, by pushing the front half of the shelf underneath the back half of the shelf.

⓬ **Instaview**†

Knock twice on the glass to turn the LED light inside the **InstaView** on or off.

⓭ **Door-in-Door Compartment**†

Stores commonly used food items such as beverages and snacks.

⓮ **Control Panel**

Sets the refrigerator and freezer temperatures.

⓯ **Pantry Drawer**

Stores food items at a different temperature than the regular refrigerator area.

⓰ **Pullout Drawer**

Provides extra storage within the freezer compartment.

⓱ **Durabase and Durabase Divider**†

Provides storage for large frozen food items.

Product Specifications

The appearance and specifications listed in this manual may vary due to constant product improvements.

Electrical requirements: 115 V, 60 Hz

Min. / Max. water pressure: 20 - 120 psi (138 - 827 kPa)

Refer to the rating label inside the appliance for the net weight.

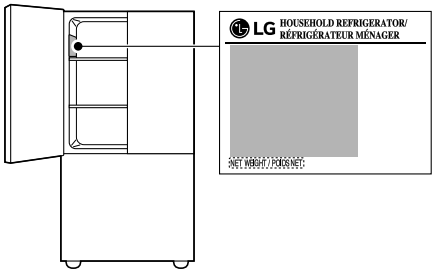

INSTALLATION

Before Installing

Installation Overview

Please read the following installation instructions first after purchasing this product or transporting it to another location.

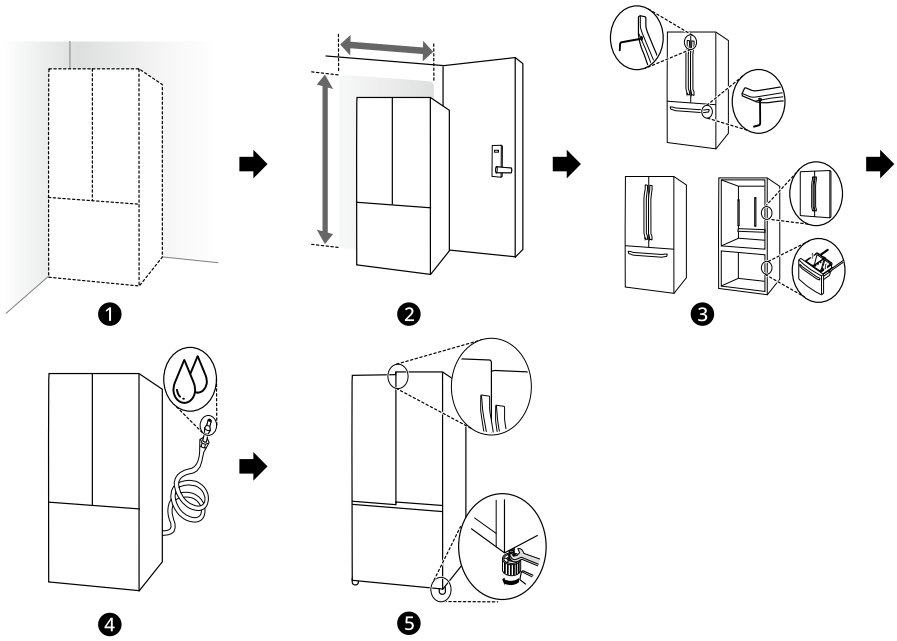

❶ Unpacking the Refrigerator

❷ Choosing the Proper Location

❸ Disassembling/Assembling

❹ Connecting the Water Line

❺ Leveling and Door Alignment

WARNING

- Connect to potable water supply only.

Unpacking the Refrigerator

WARNING

- Use two or more people to move and install the refrigerator. Failure to do so can result in back injury or other injury.
- The refrigerator is heavy. Protect the floor when moving the refrigerator for cleaning or service. Always pull the refrigerator straight out when moving it. Do not wiggle or walk the refrigerator when trying to move it, as floor damage could occur.
- Keep flammable materials and vapors, such as gasoline, away from the refrigerator. Failure to do so can result in fire, explosion, or death.

NOTE

- Remove tape and any temporary labels from your refrigerator before using. Do not remove any warning labels, the model and serial number label, or the Tech Sheet that is located under the front of the refrigerator.
- To remove any remaining tape or glue, rub the area briskly with your thumb. Tape or glue residue can also be easily removed by rubbing a small amount of liquid dish soap over the adhesive with your fingers. Wipe with warm water and dry.
- Do not use sharp instruments, rubbing alcohol, flammable fluids, or abrasive cleaners to remove tape or glue. These products can damage the surface of your refrigerator.
- Reinstall or adjust shelves as needed. Refrigerator shelves are installed in the shipping position. Reinstall shelves according to your individual storage needs.

Choosing the Proper Location

Water

The refrigerator must be located where a water supply can be connected for the automatic icemaker.

NOTE

- The water pressure must be 20 - 120 psi (138 - 827 kPa). If the refrigerator is installed in an area with low water pressure (below 20 psi or 138 kPa), you can install a booster pump to compensate for the low pressure.

Electricity

Use an individual, grounded outlet:115 Volts, 60 Hz, AC, 15 amps minimum.

WARNING

- Do not overload house wiring and cause a fire hazard by plugging in multiple appliances in the same outlet with the refrigerator.
- To reduce the risk of electric shock, do not install the refrigerator in a wet or damp area.

Flooring

To avoid noise and vibration, the unit must be installed and leveled on a solidly constructed floor. If required, adjust the leveling legs to compensate for the unevenness of the floor.

CAUTION

- Installing on carpeting, soft tile surfaces, linoleum, a platform or weakly supported structure is not recommended. Floor discoloration or property damage could occur.

Ambient Temperature

Install this appliance in an area where the temperature is between 55 °F (13 °C) and 110 °F (43 °C).

If the temperature around the appliance is too low or high, cooling ability may be adversely affected.

The internal temperatures could be affected by the location of the appliance, the ambient temperature, the frequency of door opening and other factors.

Dimensions and Clearances

- Check the dimensions of the appliance and the installation path to ensure there is sufficient room to move the refrigerator through doors or narrow openings.
- If an opening is too narrow to fit the refrigerator through, remove the refrigerator doors. See Removing/ Assembling the Doors and Drawers in this manual.
- The installation location chosen for the refrigerator should allow space behind the unit for connections and airflow and space in front to open the doors and drawers.
- Too small of a distance from adjacent items may result in lowered freezing capability and increased electricity consumption charges. Allow at least 24 inches (610 mm) in front of the refrigerator to open the doors, and at least 2 inches (50.8 mm) between the back of the refrigerator and the wall.
- Remember to allow enough room in front of the refrigerator to fully open the doors and drawers.

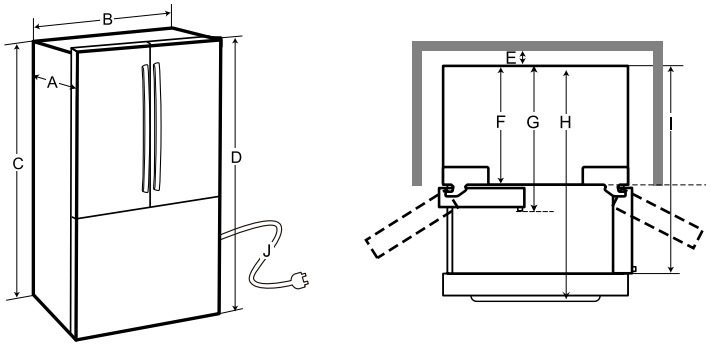

Models with Handles

-	Dimension/Clearance	LF21G6200*	LF21G6201*	LF25H6200*
A	Depth without Handle	28 3/4" (731 mm)	28 3/4" (731 mm)	33 7/16"(849 mm)
B	Width	32 15/16" (836 mm)	32 15/16" (836 mm)	32 15/16" (836 mm)
C	Height to Top of Case	68 5/8" (1743 mm)	68 5/8" (1743 mm)	68 5/8" (1743 mm)
D	Height to Top of Hinge	69 15/16" (1776 mm)	69 15/16" (1776 mm)	69 15/16" (1776 mm)
E	Back Clearance	2" (51 mm)	2" (51 mm)	2" (51 mm)
F	Depth without Door	24 13/16" (630 mm)	24 13/16" (630 mm)	29 1/2" (748 mm)
G	Depth with Handle	31 1/4" (794 mm)	31 3/16" (792 mm)	35 15/16" (912 mm)
H	Depth (Total with Freezer Drawer Open)	45 7/8" (1165 mm)	45 7/8" (1165 mm)	54 3/8" (1381 mm)
I	Depth (Total with Door Open 90°)	41 11/16" (1058 mm)	41 11/16" (1058 mm)	46 11/16" (1186 mm)
J	Length of Power Cord	61" (1550 mm)	61" (1550 mm)	61" (1550 mm)

Models without Handles

-	Dimension/Clearance	LF21C6200* LF21C6000*	LF25S6206* LF25S6200* LF25S6000*
A	Depth without Handle	28 3/4" (731 mm)	33 7/16" (849 mm)

-	Dimension/Clearance	LF21C6200* LF21C6000*	LF25S6206* LF25S6200* LF25S6000*
B	Width	32 15/16" (836 mm)	32 15/16" (836 mm)
C	Height to Top of Case	68 5/8" (1743 mm)	68 5/8" (1743 mm)
D	Height to Top of Hinge	69 15/16" (1776 mm)	69 15/16" (1776 mm)
E	Back Clearance	2" (51 mm)	2" (51 mm)
F	Depth without Door	24 13/16" (630 mm)	29 1/2" (748 mm)
G	Depth with Handle	N/A	N/A
H	Depth (Total with Freezer Drawer Open)	45 7/8" (1165 mm)	54 3/8" (1381 mm)
I	Depth (Total with Door Open 90°)	41 11/16" (1058 mm)	46 11/16" (1186 mm)
J	Length of Power Cord	61" (1550 mm)	61" (1550 mm)

Removing/Assembling Handles

These instructions are for models which ship with the handles assembled. For models shipped with the handles disassembled, follow the instructions included in the handle package.

- Tools Needed
  - Units shipped with disassembled handles: 3/32" and 1/4" Allen wrenches only
  - Units shipped with assembled handles: 3/32", 1/8" and 1/4" Allen wrenches

When moving the refrigerator through a narrow opening, removing the doors is preferred. If you must remove the handles, be very careful not to scratch the doors.

The appearance of the handles may vary from what is shown.

CAUTION

- When assembling or disassembling the refrigerator handles, grasp the handle firmly to avoid dropping it.
- Do not swing the handle into nearby people or animals.
- Make sure that the set screws are in place and the handle footprints at the ends of the handles are aligned correctly over the mounting fasteners on the doors. The set screws should be loose enough to allow the handle footprints to slide down into place over the mounting fasteners on the door.
- Make sure that there is not a gap between the door and handle after assembling the handle.

Removing Refrigerator Handles

1 Loosen the set screws ❶ with a 3/32 in. Allen wrench and remove the handle.

2 If needed, loosen the mounting fasteners ❷ that connect the refrigerator door and handle using a 1/4 in. Allen wrench, and remove the mounting fasteners.

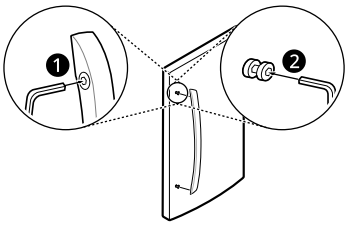

Assembling Refrigerator Handles

1 If needed, reassemble the mounting fasteners ❶ on the door with a 1/4 in. Allen wrench.

2 Place the handle on the door by fitting the handle footprints over the mounting fasteners and tightening the set screws ❷ with a 3/32 in. Allen wrench.

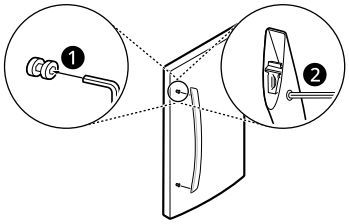

Removing/Assembling Doors and Drawers

If the entrance door is too narrow for the refrigerator to pass through, remove the refrigerator doors and move the refrigerator sideways through the doorway.

WARNING

- Use two or more people to remove and install the refrigerator doors and freezer drawers.
- Disconnect the electrical supply to the refrigerator before installing.
- Do not put hands, feet or other objects into the air vents or bottom of the refrigerator.
- Be careful when handling the hinge and hinge lever.
- Remove food and bins before detaching the doors and drawers.
- Do not hold the handle when removing or replacing the doors and drawers as the handle may come off.

- Tools Needed
  - Phillips screwdriver
  - Flat-head screwdriver

Removing the Left Refrigerator Door

1 The water supply is connected to the upper right part of the rear surface of the refrigerator. Remove the ring in the joint area. Hold the water supply connection and gently push the collet ❶ to detach the water supply line as shown.

- Connections may vary by model.

† This feature is only available on some models.

Type A†	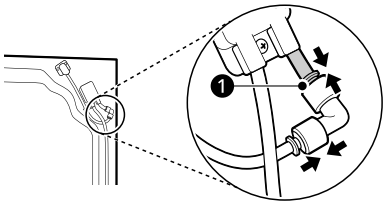
Type B†	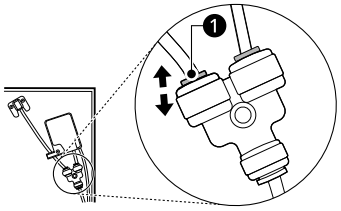

NOTE

- Disassembling/Assembling the Water Lines

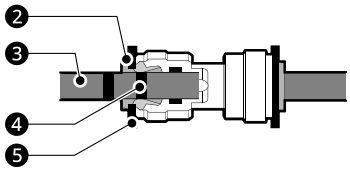

❷ Collet ❸ Tube ❹ Insert line ❺ Clip

2 Remove the screw ❻ from the hinge cover at the top of the refrigerator. Lift the hook (not visible), located at the bottom of the front side of the cover ❼ with a flat-head screwdriver.

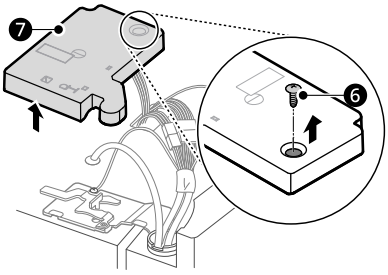

3 Remove the cover and pull out the tube ❽. Disconnect all wire harnesses ❾. Unscrew the ground wire ❿.

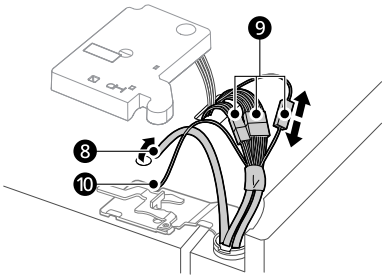

NOTE

- The number of wire harnesses may vary depending on the model.

4 Rotate the hinge lever ⓫ counterclockwise. Lift the top hinge ⓬ free of the hinge lever latch ⓭.

⚠ CAUTION

- When lifting the hinge free of the latch, be careful that the door does not fall forward.

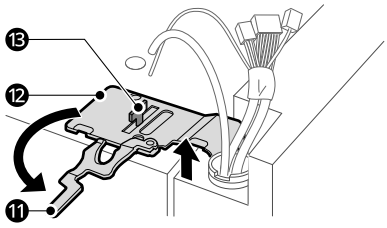

5 Lift the door from the middle hinge pin and remove the door.

⚠ CAUTION

- Place the door, inside facing up, on a nonscratching surface.

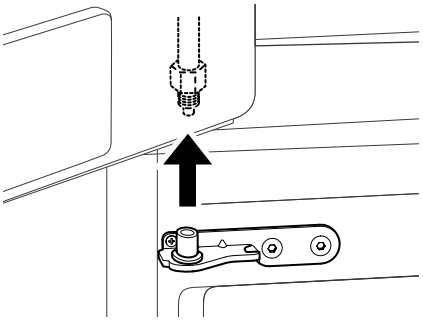

Removing the Right Refrigerator Door

1 Remove the top hinge cover screw ❶. Lift the hook (not visible), located at the bottom of the front side of the cover ❷, with a flat-head screwdriver.

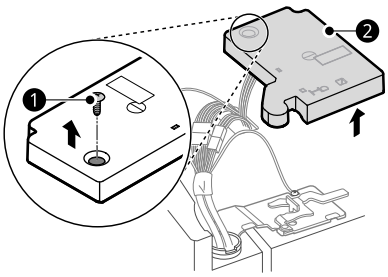

2 Detach all the wire harnesses ❸.

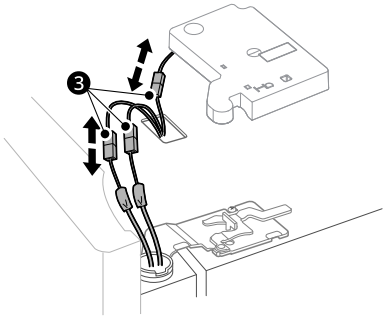

3 Rotate the hinge lever ❹ clockwise. Lift the top hinge ❺ free of the hinge lever latch ❻.

⚠ CAUTION

- When lifting the hinge free of the latch, be careful that the door does not fall forward.

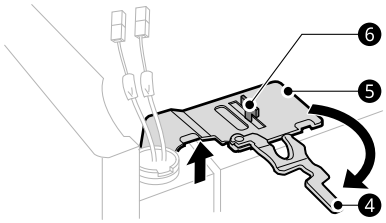

4 Lift the door from the middle hinge pin and remove the door.

⚠ CAUTION

- Place the door, inside facing up, on a nonscratching surface.

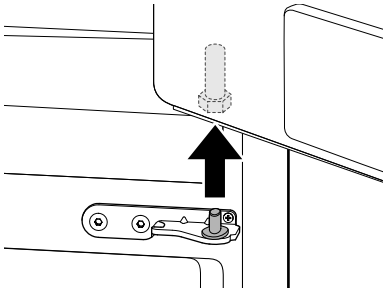

Removing the Freezer Drawer

⚠ WARNING

- Use two or more people to remove and install the refrigerator doors and freezer drawer.
- Be careful of sharp hinges on both sides of the drawer.
- When you lay the drawer down, be careful not to damage the floor.
- Do not sit or stand on the freezer drawer.
- To prevent accidents, keep children and pets away from the drawer. Do not leave the drawer open. If the Durabase® storage bin is removed from the freezer drawer, there is sufficient space for a small child or pet to crawl inside.

1 Pull the drawer open to full extension.

2 Gently lift and pull out the ice bin.

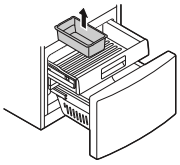

3 Lift the front of the drawer up, then pull it straight out.

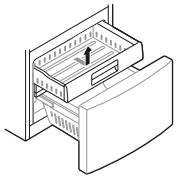

4 Remove the Durabase basket from the rails. Remove the screws from the rails at both ends.

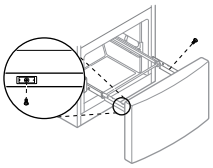

5 Grip both sides of the drawer and pull it up to remove it from the rails.

⚠ CAUTION

- Do not hold the handle when removing or replacing the drawer. The handle may come off, causing personal injury.

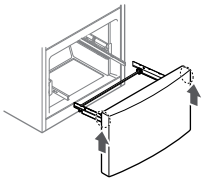

6 Hold both rails and push them in simultaneously.

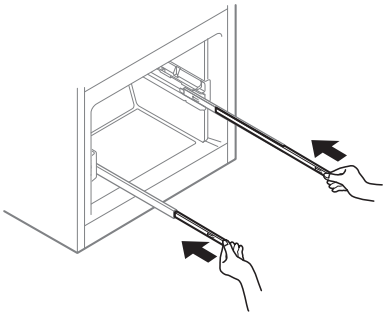

Assembling the Freezer Drawer

1 Pull out both rails simultaneously, until they are fully extended.

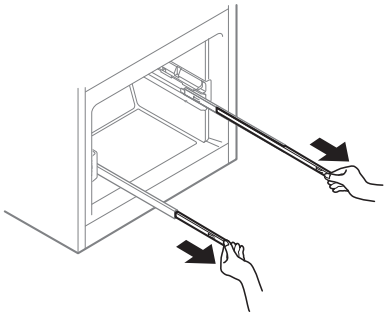

2 Grasp the drawer on each side and hook the drawer supports into the rail tabs located on both sides.

⚠ CAUTION

- Do not hold the handle when removing or replacing the drawer. The handle may come off, causing personal injury.

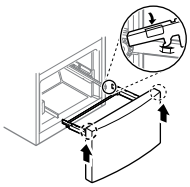

3 Lower the door into its final position and insert the screws in the rails on both sides.

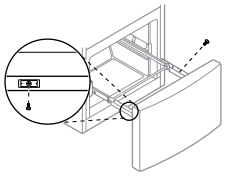

4 Insert the drawer into the frame, and push the drawer back until it clicks into place.

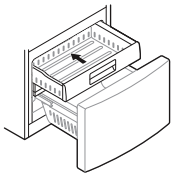

5 Replace the ice bin in the drawer. Insert the Durabase basket in the rail assembly.

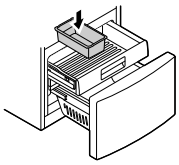

Assembling the Right Refrigerator Door

CAUTION

- Install the right-side door first.

NOTE

- The number of wire harnesses may vary depending on the model.
- Ground wire is only present on some models.

1 Make sure that the plastic sleeve is inserted in the bottom of the door. Lower the door onto the middle hinge pin as shown in the figure.

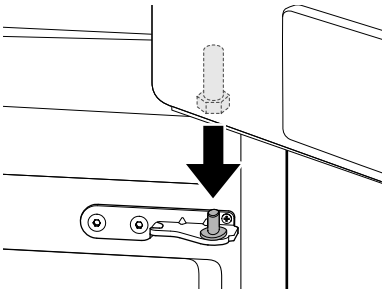

2 Fit the hinge ❶ over the hinge lever latch ❷ and slot it into place. Rotate the lever ❸ counterclockwise to secure the hinge.

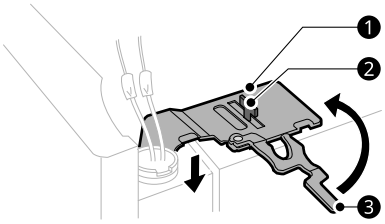

3 Connect the wire harnesses ❹.

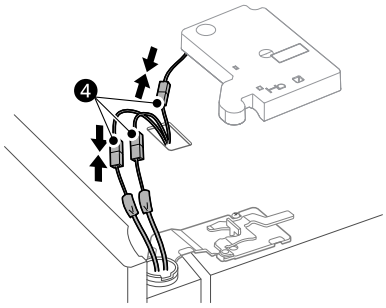

4 Place the cover ❺ in its place. Insert and tighten the cover screw ❻ .

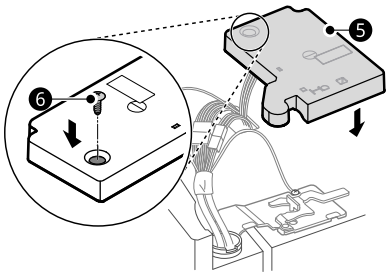

Assembling the Left Refrigerator Door

CAUTION

- Install the left refrigerator door after the right door is installed.

1 Make sure that the plastic sleeve is inserted in the bottom of the door. Install the refrigerator door onto the middle hinge.

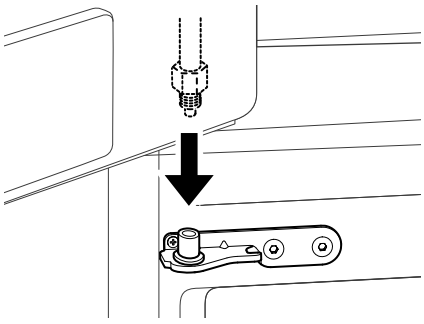

2 Fit the hinge ❶ over the hinge lever latch ❷ and slot it into place. Rotate the lever ❸ clockwise and fasten the hinge.

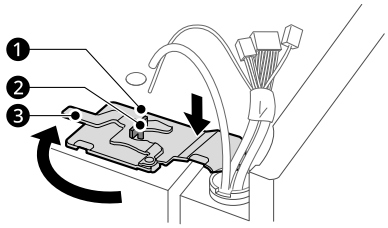

3 Connect all the wire harnesses and the ground wire.

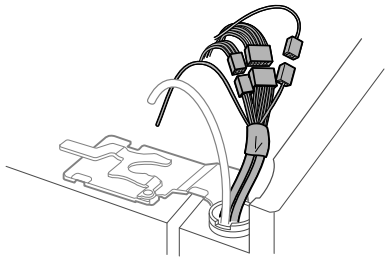

NOTE

- The number of wire harnesses may vary depending on the model.

4 Push the water supply tube into the hole on the top case and pull it through the backplate.

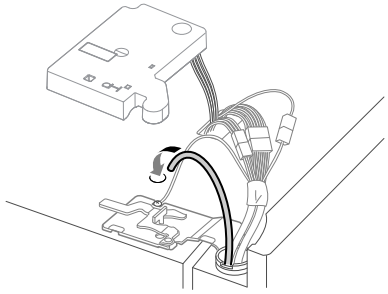

5 Hold the water supply connection and gently push in the collet ❹ to connect the water supply line as shown. Insert the tube at least 5/8 inch (15 mm) into the connector. Insert the clip on the joint to fasten the tube in place.

- Connections may vary by model.

† This feature is only available on some models.

Type A†	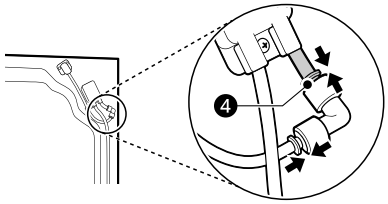
Type B†	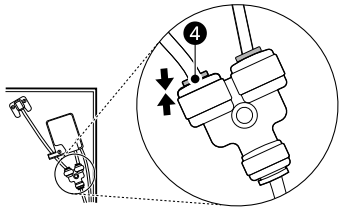

NOTE

- Disassembling/Assembling the Water Lines

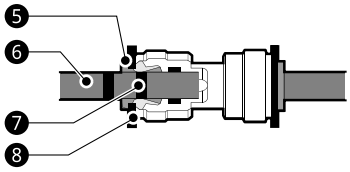

❺ Collet ❻ Tube ❼ Insert line ❽ Clip

- Gently press the collet and insert the tube until only one line shows on the tube.

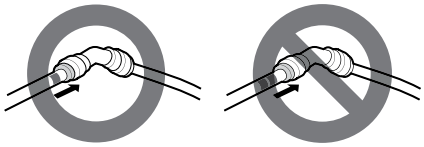

6 Place the cover ❾ in place. Insert and tighten the cover screw ❿.

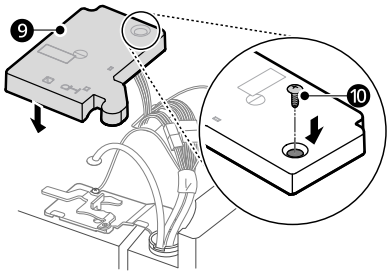

Connecting Refrigerator to Water Supply

Before Beginning

These instructions assume you have an existing water supply connection for the refrigerator. If necessary, call a qualified plumber to install a water supply line for the refrigerator.

- Turn the icemaker OFF if the refrigerator will be used before the water line is connected.
- Do not install the icemaker tubing in areas where the ambient temperatures fall below freezing.

WARNING

- Connect to potable water supply only.

CAUTION

- To prevent burns and product damage, only connect the refrigerator water line to a cold water supply.
- Wear eye protection during installation to prevent injury.

Water Pressure

You will need a cold water supply.

Water Pressure

- **Models with water filter:**
  - 20 - 120 psi (138 - 827 kPa)
- **Where reverse osmosis water filtration system is connected to a cold water supply:**
  - 40 - 60 psi minimum to reverse osmosis system (2.8 kgf/cm^2 - 4.2 kgf/cm^2, or less than 2 - 3 seconds to fill a cup of 7 oz capacity)

If the water pressure from the reverse osmosis system is less than 20 psi or 138 kPa or 1.4 kgf/cm^2 (takes more than 4 seconds to fill a cup of 7 oz or 198 cc capacity):

- Check to see if the sediment filter in the reverse osmosis system is blocked. Replace the filter if necessary.
- Allow the storage tank on the reverse osmosis system to refill after heavy usage.
- If the water pressure remains low, call a licensed, qualified plumber.
- All installations must be in accordance with local plumbing code requirements.

Supplies Needed

- **PEX Tubing,** ¼ in. outer diameter, to connect the refrigerator to the water supply. Be sure both ends of the tubing are cut square. To determine how much tubing you need, measure the distance from the water valve on the back of the refrigerator to the water supply pipe. Then, add 8 feet (2.4 m). Be sure there is sufficient extra tubing (about 8 feet [2.4 m] coiled into 3 turns of about 10 in. [25 cm] diameter) to allow the refrigerator to move out from the wall after installation.
- **½ in. or adjustable wrench.**
- **Flat-blade and Phillips screwdrivers.**

NOTE

- The hookup line cannot be white, plastic tubing. Licensed plumbers must use only Cross Link Polyethylene (PEX) tubing.
- Be sure there is sufficient extra tubing (about 8 ft. coiled into three turns of about 10 in. diameter) to allow the refrigerator to move out from the wall after installation.

Connecting Water Line to Refrigerator

1 Connect the tubing to the shutoff valve.

- If using PEX tubing, connect the fittings on both ends of the tubing to the shutoff valve. Make sure the tubing is fully inserted into the valve. Tighten the compression nut securely.

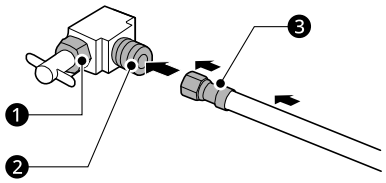

❶ Packing Nut

❷ Shutoff Valve

❸ Fitting

2 Flush out the tubing into a bucket.

- Flush out the tubing coming from the home water supply until the water is clear. Shut the water off at the water valve after about

one quart of water has been flushed through the tubing.

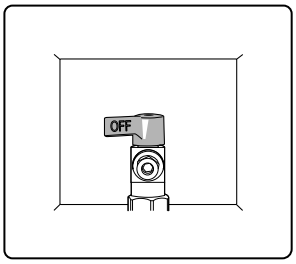

NOTE

- Before making the connection to the refrigerator, be sure that the refrigerator power cord is not plugged into the wall outlet.

3 Remove the flexible plastic cap from the water valve on the refrigerator.

4 Place the compression nut and ferrule (sleeve) onto the end of the tubing as shown. If you are using a PEX connection kit, it may already have the required fittings.

5 Insert the end of the PEX tubing into the connection as far as possible. While holding the tubing, tighten the fitting.

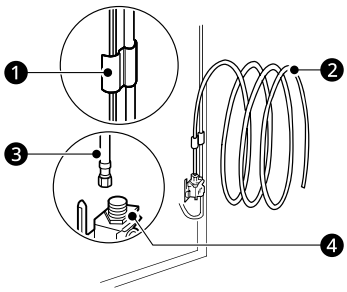

❶ Tubing Clamp

❷ ¼ in. Tubing

❸ ¼ in. PEX Tubing

❹ Refrigerator Connection

6 Turn the water on at the shutoff valve.

- Tighten any connections that leak.

⚠ CAUTION

- Check to see if leaks occur at the water line connections.
- Make sure the house water valve is fully open. If it is not open completely, the icemaker and dispenser may not work properly.

Leveling and Door Alignment

Leveling

The refrigerator has two front leveling legs. Adjust the legs to alter the tilt from front-to-back or side-to side. If the refrigerator seems unsteady, or the doors do not close easily, adjust the refrigerator's tilt using the instructions below.

1 Turn the leveling leg to the left to raise that side of the refrigerator or to the right to lower it. It may take several turns of the leveling leg to adjust the tilt of the refrigerator.

NOTE

- A flare nut wrench works best, but an open-end wrench will suffice. Do not over-tighten.

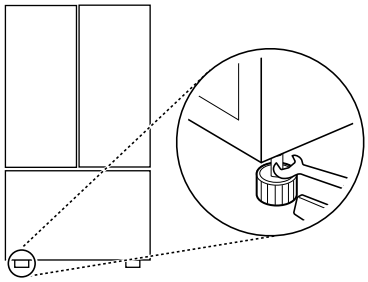

2 Open both doors and check to make sure that they close easily. If the doors do not close easily, tilt the refrigerator slightly more to the rear by turning both leveling legs to the left. It may take several more turns, and be sure to turn both leveling legs the same amount.

Door Alignment

The door alignment method may differ depending on the model.

Refrigerator Type A

Both the left and right refrigerator doors have an adjustable nut, located on the bottom hinge, to raise and lower them to align properly.

If the space between the doors is uneven even after the door bins are filled, follow the instructions below to align the doors evenly:

Use the wrench (included with the owner's manual) to turn the nut in the door hinge to adjust the height. Turn the nut to the right to raise the door or to the left to lower it.

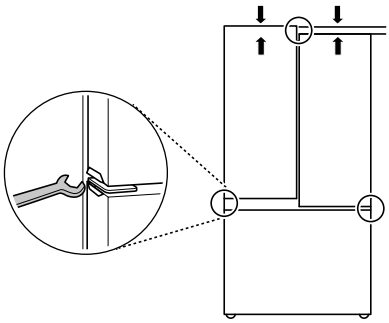

Refrigerator Type B

Left Refrigerator Door

The left refrigerator door has an adjustable nut, located on the bottom hinge, to raise and lower the door for proper alignment.

If the space between the doors is uneven, follow the instructions below to align the left door:

Use the wrench (included with the owner's manual) to turn the nut in the door hinge to adjust the height. Turn the nut to the right to raise the door or to the left to lower it.

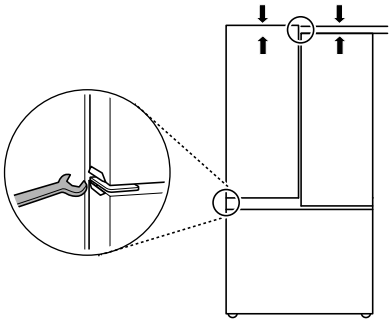

Right Refrigerator Door

The right refrigerator door does not have an adjustable nut.

If the space between the doors is uneven, follow the instructions below to align the right door:

1 Lift up both the inner and outer door sections of the right door to raise them at the middle hinge. (It may be easier to lift them with the doors open.)

2 While the door is lifted, have an assistant insert the snap ring on the middle hinge. The snap ring may differ depending on the model.

- Snap ring type A

  Use pliers to insert the snap ring on the middle hinge of the inner door section as shown. Insert additional snap rings until the right door is aligned.

- Snap ring type B

  Insert only one snap ring on the middle hinge of the inner door section as shown.

  - If a snap ring is already inserted on the middle hinge, remove the snap ring before inserting a new snap ring.

⚠ CAUTION

- The door is heavy. To avoid injury, use two or more people to lift and align the refrigerator door.
- Small parts are a swallowing hazard for small children. Keep snap rings out of the reach of children.
- Do not insert the snap ring on the hinge of the outer door section.

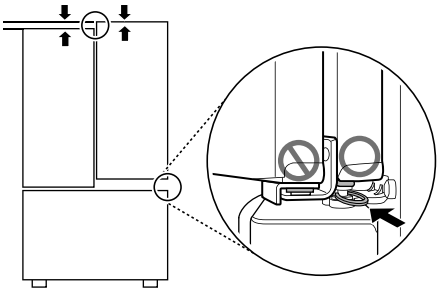

NOTE

- The number of freezer drawers may vary depending on the model.

Door Alignment (Door-in-Door Model)

Left Refrigerator Door

The left refrigerator door has an adjustable nut, located on the bottom hinge, to raise and lower the door for proper alignment.

If the space between the doors is uneven, follow the instructions below to align the left door:

Use the wrench (included with the owner's manual) to turn the nut in the door hinge to adjust the height. Turn the nut to the right to raise the door or to the left to lower it.

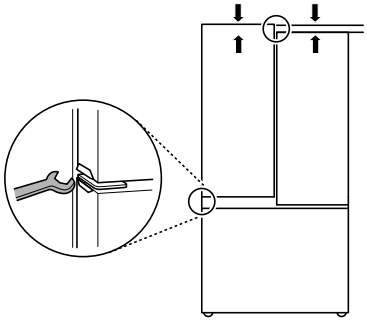

Right Refrigerator Door

The right refrigerator door does not have an adjustable nut.

If the space between the doors is uneven, follow the instructions below to align the right door:

1 With one hand, lift up both the inner and outer door sections of the right door to raise them at the middle hinge. (It may be easier to lift it with the doors open.)

2 With the other hand, use pliers to insert the snap ring on the middle hinge of the inner door section as shown. Do not insert the ring on the hinge of the outer door section.

3 Insert additional snap rings until the right door is aligned. (Two snap rings are provided with the unit.)

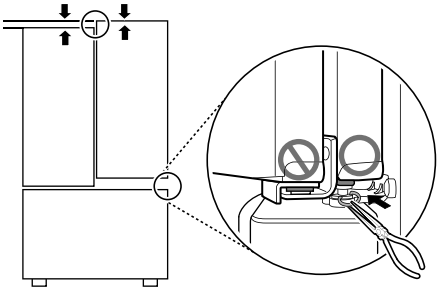

Turning on the Power

- After installing, plug the refrigerator's power cord into a 3-prong grounded outlet and push the refrigerator into the final position.

⚠ CAUTION

- Connect to a rated power outlet.
- Have a certified electrician check the wall outlet and wiring for proper grounding.
- Do not damage or cut off the ground terminal of the power plug.

Position the Refrigerator

- If the refrigerator is connected to water, arrange the coil of tubing so that it does not vibrate against the back of the refrigerator or against the wall. Push the refrigerator back toward the wall, leaving adequate clearance.

Start the Icemaker

- If the water line is connected, turn the icemaker(s) on.
  - To turn the icemaker(s) on, refer to Control Panel in the Operation section.
- The icemaker(s) will not begin to operate until it reaches its operating temperature of 15 °F (–9 °C) or below. It will then begin operation automatically if the icemaker(s) has been turned ON.

OPERATION

Before Use

Checklist

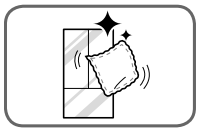

Clean the refrigerator.

Clean the refrigerator thoroughly and wipe off all dust that accumulated during shipping.

CAUTION

- Do not scratch the refrigerator with a sharp object or use a detergent that contains alcohol, a flammable liquid or an abrasive when removing any tape or adhesive from the refrigerator. Remove adhesive residue by wiping it off with your thumb or dish detergent.
- Do not peel off the model or serial number label or the technical information on the rear surface of the refrigerator.

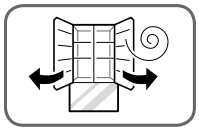

Open refrigerator doors and freezer drawers to ventilate the interior.

The inside of the refrigerator may smell like plastic at first. Remove any adhesive tape from inside the refrigerator and open the refrigerator doors and the freezer drawers for ventilation.

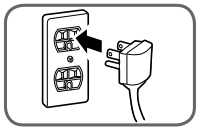

Connect the power supply.

Check if the power supply is connected before use.

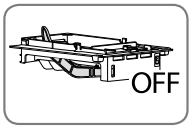

Turn off the icemaker.

Turn off the icemaker if the refrigerator is not yet connected to the water supply.

NOTE

- The icemaker water valve may buzz if the icemaker is turned on while the refrigerator is not connected to the water supply.

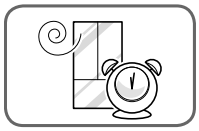

Wait for the refrigerator to cool.

After the refrigerator is connected to power, it will take time to cool. The duration depends on the model and ambient conditions. In summer, it may take longer for the interior to cool down. Keep the refrigerator doors closed to allow it to cool down quickly.

- Don’t add food before the appliance has cooled. Food may spoil or odors may linger.
- To reach the set temperature quickly, keep the refrigerator doors closed after placing food inside.

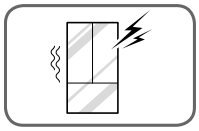

The refrigerator makes a loud noise after initial operation.

This is normal. The volume will decrease as the temperature decreases.

Control Panel

Depending on the model, some of the following functions may not be available.

The actual control panel may differ from model to model.

Control Panel Features

† This feature is only available on some models.

Refrigerator Control Panel

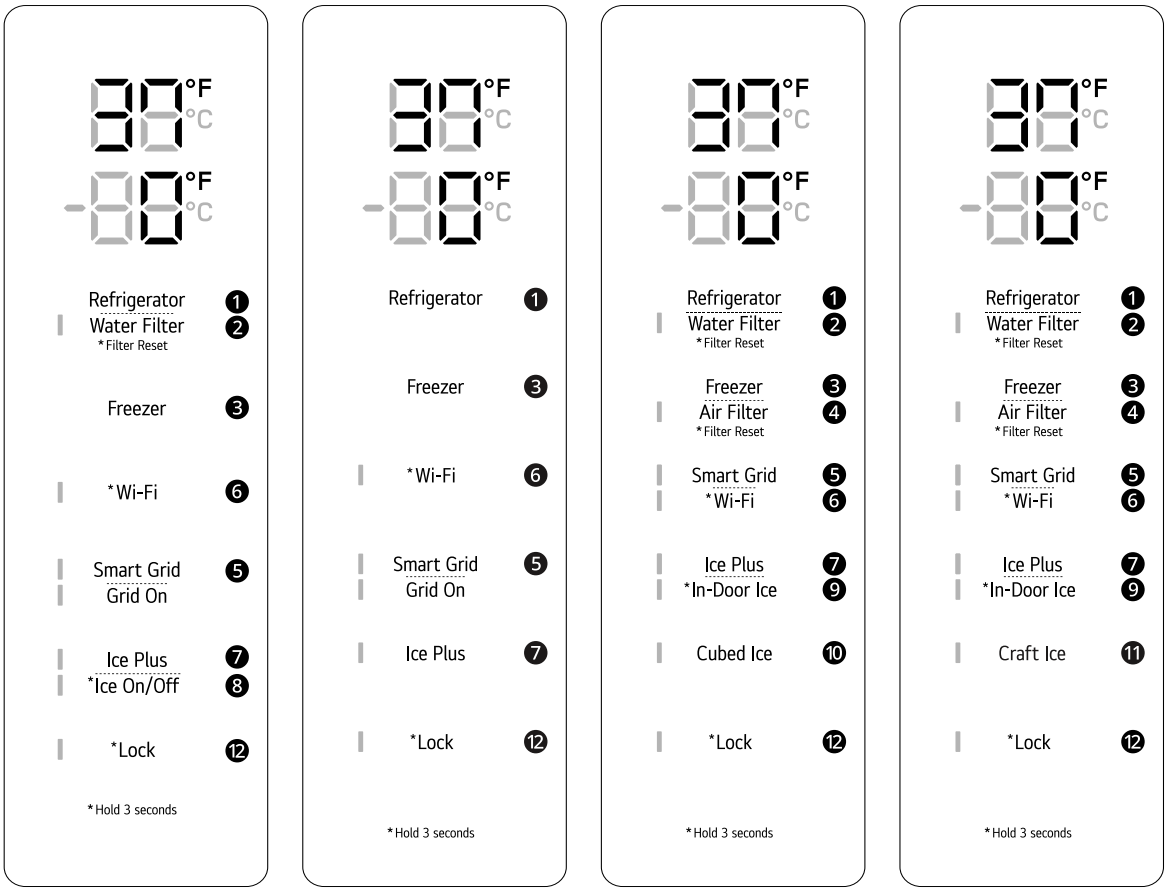

❶ Refrigerator

Indicates the set temperature of the refrigerator compartment in Celsius (℃) or Fahrenheit (℉). The default refrigerator temperature is 37 ℉ (3 ℃). Press the **Refrigerator** button repeatedly to select a new set temperature from 33 ℉ to 43 ℉ (1 ℃ to 7 ℃).

NOTE

- To change the temperature mode from °F to °C (or vice versa) press and hold the **Refrigerator** and **Freezer** buttons simultaneously for approximately five seconds. The temperature indicator on the display window switches between Celsius and Fahrenheit.
- The displayed temperature is the target temperature, and not the actual temperature of the refrigerator. The actual refrigerator temperature depends on the food inside the refrigerator.

❷ **Water Filter**

Replace the water filter when the water filter indicator turns on. After replacing the water filter, press and hold the **Water Filter** button for three seconds to turn the indicator light off. Replace the water filter approximately every six months.

❸ **Freezer**

Indicates the set temperature of the freezer compartment in Celsius (℃) or Fahrenheit (℉). The default freezer temperature is 0 ℉ (-18 ℃). Press the **Freezer** button repeatedly to select a new set temperature from - 7 ℉ to 5 ℉ (-23 ℃ to -15 ℃) or - 4 ℉ to 4 ℉.

❹ **Air Filter**

The air filter helps remove odors from the refrigerator.

NOTE

- Replace the air filter when the air filter indicator turns on. After replacing the air filter, press and hold the Air Filter button for 3 seconds to turn the indicator off. Replace the air filter approximately every six months.

❺ **Smart Grid**

Press the **Smart Grid** button to turn the function On/Off. When the function is on, the indicator illuminates. The function automatically turns on when the refrigerator is connected to the Wi-Fi network. The Smart Grid function is only available if your electric utility company supports the function.

When the refrigerator is responding to a Demand Response (DR) message from the electric company, the Grid On indicator illuminates.

❻ **Wi-Fi**

The Wi-Fi button, when used with the **LG ThinQ** app, allows the refrigerator to connect to a home Wi-Fi network. Refer to Smart Functions for information on the initial setup of the application.

The Wi-Fi indicator shows the status of the refrigerator's network connection. The indicator illuminates when the refrigerator is connected to the Wi-Fi network.

Press and hold the **Wi-Fi** button for 3 seconds to connect to the network. The indicator blinks while the connection is being made and then turns on once the connection is successfully made.

❼ **Ice Plus**

Models with automatic icemaker: This function increases both ice making and freezing capabilities.

Models without automatic icemaker: This function increases freezing capabilities.

- Press the **Ice Plus** button to illuminate the indicator and activate the function for 24 hours. The function automatically shuts off after 24 hours.
- Stop the function manually by pressing the button once more.

❽ **Ice On/Off**†

Press and hold the **Ice On/Off** button for 3 seconds to turn the icemaker on/off.

❾ **In-Door Ice**†

Press and hold the **In-Door Ice** button for 3 seconds to turn the **In-Door Ice** icemaker on/off.

❿ **Cubed Ice**†

Press the **Cubed Ice** button to turn the **Cubed Ice** icemaker on/off.

⓫ **Craft Ice**†

Press the **Craft Ice** button repeatedly to select between the **3 ICE**, **6 ICE** and **OFF** modes.

After 5 seconds of idle time, the last mode will be saved, and the display will return to normal.

- To turn off the **Craft Ice** icemaker, select the **OFF** mode.

- To turn on the **Craft Ice** icemaker, select the **3 ICE** or **6 ICE** mode.

NOTE

- For more ice, select the **6 ICE** mode. For clearer ice, select the **3 ICE** mode.

⓬ Lock

The lock function disables every other button on the display.

- When power is initially connected to the refrigerator, the lock function is off.
- To lock the control panel buttons, press and hold the **Lock** button until the indicator appears in the display and the function is activated.
- To disable the function, press and hold the **Lock** button for approximately three seconds.

NOTE

- **Display Mode (For Store Use Only)**
  - The Display Mode disables all cooling in the refrigerator and freezer sections to conserve energy while on display in a retail store. When activated, **OFF** is displayed on control panels with LCD displays. On simplified control panels, the temperature indicators on the display will blink one row at a time from top to bottom.
  - To deactivate/activate:

    With either refrigerator door opened, press the **Ice Plus** button 3 times consecutively while pressing the **Refrigerator** button. The control panel beeps and the temperature settings display to confirm that Display mode is deactivated. Use the same procedure to activate Display Mode.

Dispenser Control Panel

This feature is only available on some models.

Type A

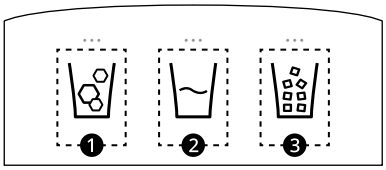

Type B

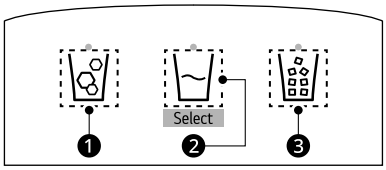

Type A

- Select the desired dispenser mode from the buttons on the dispenser control panel. From left to right, the icons indicate cubed ice ❶, water ❷, and crushed ice ❸. Press the dispenser switch with a glass or other container to dispense cubed ice, water or crushed ice.

Type B

- Select the desired dispenser mode from the **Select** button on the dispenser control panel. From left to right, the icons indicate cubed ice ❶, water ❷, and crushed ice ❸. Press the dispenser switch with a glass or other container to dispense cubed ice, water or crushed ice.

NOTE

- When the refrigerator is in the Power Saving Mode, the display remains off until a door is opened or a button is pressed. Once on, the display remains on for 20 seconds.

Sabbath Mode

This feature is only available on some models.

Using the Sabbath Mode

Sabbath mode is used on the Jewish Sabbath and Holidays.

The method to activate/deactivate the Sabbath mode varies depending on the model purchased.

Models with Wi-Fi

- To turn Sabbath mode on, touch the display to activate it, then press and hold the **Freezer** and **Wi-Fi** buttons for 3 seconds until Sb appears in the display.
- To turn Sabbath mode off manually, press and hold the **Freezer** and **Wi-Fi** buttons for 3 seconds.

Models without Wi-Fi

- To turn Sabbath mode on, touch the display to activate it, then press and hold the **Freezer** and **Water Filter** buttons for 3 seconds until Sb appears in the display.
- To turn Sabbath mode off manually, press and hold the **Freezer** and **Water Filter** buttons for 3 seconds.

NOTE

- Sabbath mode automatically turns off after 96 hours.
- Once turned on, Sabbath mode is maintained even after a power outage.
- Selecting Sabbath mode automatically turns off the alarm functions.
- The dispenser and InstaView are disabled in Sabbath mode, on applicable models.

InstaView

This feature is only available on some models.

InstaView Door-in-Door

Knock twice on the glass to turn the LED light inside the InstaView on or off. The LED light turns off automatically after 10 seconds.

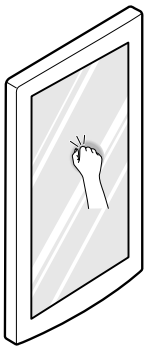

NOTE

- The LED light does not turn on if the right refrigerator door is open.
- The **InstaView** function will not activate for two seconds after closing the door.
- The **InstaView** function is disabled when the ice dispenser is in use.

Automatic Icemaker

This feature is only available on some models.

⚠ WARNING

- DO NOT place fingers in the automatic icemaker when the refrigerator is plugged in.
- Avoid contact with any moving parts of the ejector mechanism or with the heater that releases the ice.

Before Using the In-Door Icemaker

NOTE

- Ice is made in the automatic in-door icemaker and sent to the dispenser. The icemaker produces 70 - 182 cubes in a 24-hour period, depending on freezer compartment temperature, room temperature, number of door openings and other operating conditions.
- It takes about 12 to 24 hours for a newly installed refrigerator to begin making ice.
- Ice-making stops when the in-door ice bin is full. When full, the in-door ice bin holds approximately 6 to 8 (12-16 oz.) glasses of ice.

NOTE

- Foreign substances or frost on the auto shutoff (feeler arm) can interrupt ice production. Make sure the auto shutoff (feeler arm) area is clean at all times for proper operation.
- To increase ice production, use the **Ice Plus** function. The function increases both ice making and freezing capabilities.

In-Door Icemaker (Cubed Ice)

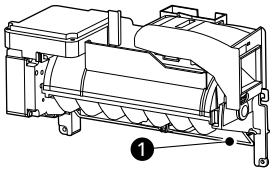

❶ Auto Shutoff (feeler arm)

Before Using the Freezer Icemaker

This feature is only available on some models.

The feature may vary depending on the model purchased.

NOTE

- Throw away the first bin full of ice after installation. This is also necessary if the refrigerator has not been used for a long time.
- The icemaker begins producing ice approximately 48 hours after the appliance is initially installed.
- The sound of ice dropping into the ice bin is normal.
- If the ice bin is completely filled with ice, ice production will stop.
- The amount and shape of ice may vary according to the environment (ambient temperature around the appliance, frequency of the door being opened, amount of food stored in the appliance, water pressure, etc.).
- In the event of a power outage, throw away the ice stored in the ice bin.

Freezer Icemaker (Cubed Ice)

This feature is only available on some models.

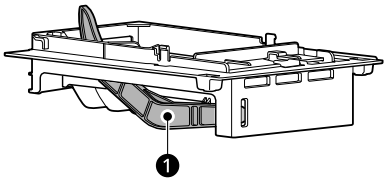

❶ Feeler Arm

NOTE

- This automatic freezer icemaker produces 12 cubes at a time, 50-110 pieces within a 24 hour period if conditions are favorable. This amount may vary according to the environment (ambient temperature around the appliance, frequency of the door being opened, amount of food stored in the appliance, etc.).
- Ice cubes which are stored in the ice bin for a long time may clump together and be difficult to separate. If this happens, empty the ice bin completely and clean it before reinstalling it.

Freezer Icemaker (Craft Ice™)

This feature is only available on some models.

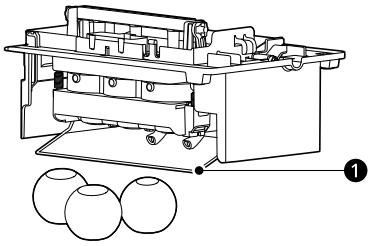

❶ Feeler Arm

⚠ CAUTION

- Do not insert round ice into the in-door ice bin, as it can damage the ice and water dispenser.

NOTE

- The icemaker begins producing ice approximately 48 hours after the appliance is initially installed. The first batches of ice may not be round and clear.
- Following installation or water filter replacement, the first few batches of ice may be semicircular or contain air bubbles.

- If the water pressure is less than 20 psi (138 kPa) or a reverse osmosis system is used, the shape of the ice may vary.
- The ice may look cloudy depending on the water quality in the installation location and the operating conditions.
- Throw away any shards of ice you may find in the ice bin, as they may stick to the ice stored in the ice bin.
- After a short-term power outage, it will take longer to make the first batch of ice, and the ice may not be round. If the power will be out for a longer period, throw away the ice stored in the ice bin.
- The **Craft Ice** icemaker produces 1 batch of round ice (3 pieces) at a time.
- In **3 ICE** mode, the **Craft Ice** icemaker produces 1 batch of round ice (3 pieces) about every 24 hours. In **6 ICE** mode, the **Craft Ice** icemaker produces 2 batches of round ice (6 pieces total) in the same period.
- For more ice, select the **6 ICE** mode. For clearer ice, select the **3 ICE** mode.
- The time needed to make ice may vary according to operating conditions.
- The ice bin stores 20 - 30 pieces of round ice.

Turning the Icemaker On/Off

To turn the icemaker(s) On/Off, refer to **Control Panel** in the **OPERATION** section.

Normal Sounds You May Hear

- Keeping the power turned on to the icemaker(s) before the water line is connected can damage the icemaker(s).
- You will hear the sound of ice dropping into the bin(s) and water running in the pipes as the icemaker(s) refills.
- The icemaker water valve buzzes as the icemaker(s) fills with water. If the icemaker(s) is turned on, it will buzz even if it has not yet been hooked up to water.

  To stop the buzzing:

  - Turn the icemaker(s) off by referring to Control Panel in the Operation section.

Preparing for Vacation

Turn the icemaker(s) off and shut off the water supply to the refrigerator.

To turn the icemaker(s) off, refer to Control Panel in the Operation section.

NOTE

- The ice bin(s) should be emptied any time the icemaker(s) is turned Off.

If the ambient temperature will drop below freezing, have a qualified technician drain the water supply system to prevent serious property damage due to flooding caused by ruptured water lines or connections.

Storing Food

NOTE

- If you are leaving home for a short period, like a short vacation, the refrigerator should be left on. Refrigerated foods that are able to be frozen will stay preserved longer if stored in the freezer.
- If you are leaving the refrigerator turned off for an extended period, remove all food and unplug the power cord. Clean the interior, and leave the door open to prevent fungi from growing in the refrigerator.
- If doors are opened or closed too often, warm air may penetrate the refrigerator and raise its temperature. This can increase the running costs of the unit.

Food Storage Tips

Wrap or store food in the refrigerator in airtight and moisture-proof material unless otherwise noted. This prevents food odor and taste transfer throughout the refrigerator. For dated products, check date code to ensure freshness.

⚠ CAUTION

- Do not overfill or pack items too tightly into door bins. Doing so may cause damage to the bin or personal injury if items are removed with excessive force.
- Do not store glass containers in the freezer. Contents may expand when frozen, break the container and cause injury.

How to Store Food

- Butter or Margarine
  - Keep opened butter in covered dish or closed compartment. When storing an extra supply, wrap in freezer packaging and freeze.

- Cheese
  - Store in original wrapping until used. Once opened, rewrap tightly in plastic wrap or aluminum foil.
- Milk
  - Wipe milk cartons. For coldest milk, place containers on an interior shelf.
- Eggs
  - Store in original carton on interior shelf, not on door shelf.
- Fruit
  - Do not wash or hull fruit until it is ready to be used. Sort and keep fruit in original container in a crisper, or store in completely closed paper bag on refrigerator shelf.
- Leafy Vegetables
  - Remove store wrapping, trim or tear off bruised and discolored areas, wash in cold water, and drain. Place in plastic bag or plastic container and store in crisper.
- Vegetables with skins (carrots, peppers)
  - Place in plastic bags or plastic container and store in crisper.
- Fish
  - Freeze fresh fish and shellfish if they are not being eaten the same day purchased. Eating fresh fish and shellfish the same day purchased is recommended.
- Leftovers
  - Cover leftovers with plastic wrap or aluminum foil, or store in plastic containers with tight lids.

NOTE

- Do not store food with high moisture content towards the top of the refrigerator. The moisture could come into direct contact with the cold air and freeze.
- Wash food before storing it in the refrigerator. Vegetables should be washed, and food packaging should be wiped down to prevent adjacent foods from being contaminated.
- If the refrigerator is kept in a hot and humid place, frequent opening of the door or storing a lot of vegetables in the refrigerator may cause condensation to form. Wipe off the condensation with a clean cloth or a paper towel.

Storing Frozen Food

Check a freezer guide or a reliable cookbook for further information about preparing food for freezing or food storage times.

Freezing

Your freezer will not quick-freeze a large quantity of food. Do not put more unfrozen food into the freezer than will freeze within 24 hours (no more than 2 to 3 pounds of food per cubic foot of freezer space). Leave enough space in the freezer for air to circulate around packages. Be careful to leave enough room at the front so the door can close tightly.

Storage times will vary according to the quality and type of food, the type of packaging or wrap used (how airtight and moisture-proof) and the storage temperature. Ice crystals inside a sealed package are normal. This simply means that moisture in the food and air inside the package have condensed, creating ice crystals.

NOTE

- Allow hot foods to cool at room temperature for 30 minutes, and then package and freeze. Cooling hot foods before freezing saves energy.

Packaging

Successful freezing depends on correct packaging. When you close and seal the package, it must not allow air or moisture in or out. If it does, you could have food odor and taste transfer throughout the refrigerator and could also dry out frozen food.

Packaging Recommendations

- Rigid plastic containers with tight-fitting lids
- Straight-sided canning/freezing jars
- Heavy-duty aluminum foil
- Plastic-coated paper
- Non-permeable plastic wraps
- Specified freezer-grade self-sealing plastic bags

Follow package or container instructions for proper freezing methods.

Do not use

- Bread wrappers
- Non-polyethylene plastic containers
- Containers without tight lids
- Wax paper or wax-coated freezer wrap
- Thin, semi-permeable wrap

Crisper Drawers

Removing/Assembling the Crisper Drawers

1 To remove, pull the crisper out to full extension, lift the front up, and pull straight out.

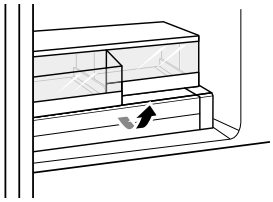

2 Lift the front of the cover up with both hands until it detaches from the back wall of the cabinet, and pull it out.

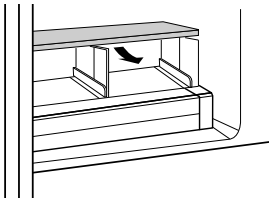

3 To reassemble, insert the cover into the refrigerator with both hands and lower it onto the guides.

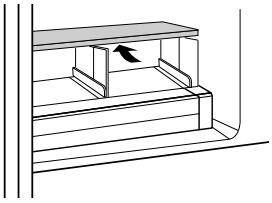

4 Slightly tilt up the front of the crisper, insert it into the frame, and push it back into place.

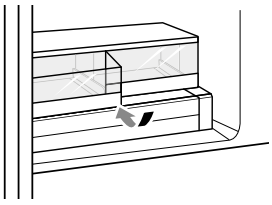

Glide'N'Serve

Using the Pantry Drawer

This drawer can be used for large party trays, deli items and beverages. This drawer should not be used to store vegetables that require high humidity.

⚠ CAUTION

- Do not place any items on the Pantry Drawer cover.

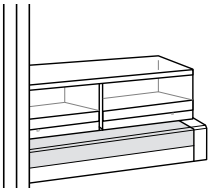

Detaching/Assembling the Pantry Drawer

1 To remove the Pantry Drawer, pull out the drawer until it stops, lift the front up, and pull straight out.

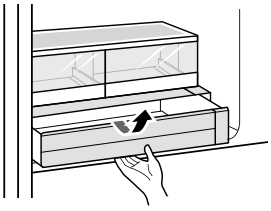

2 To assemble, slightly tilt up the front, insert the drawer into the frame and push it back into place.

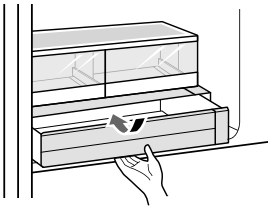

Refrigerator Shelves

The shelves in the refrigerator are adjustable to meet individual storage needs.

Adjusting the shelves to fit items of different heights will make finding the exact item you want easier.

Detaching/Assembling Shelves

The type of shelves may differ from model to model.

CAUTION

- Do not clean glass shelves with warm water while they are cold. Shelves may break if exposed to sudden temperature changes or impact.
- Open refrigerator doors fully when detaching or assembling shelves.

Full-Width Shelf

1 To detach, tilt up the front of the shelf.

2 Support the shelf from the bottom and tilt one end up so the shelf is at an angle.
   - If needed, lower one side of the shelf on the bottom of the refrigerator interior.

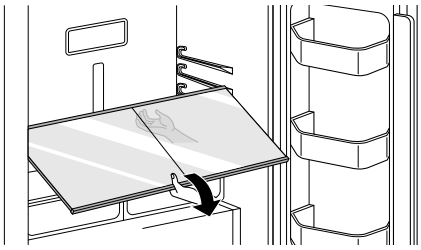

3 Pull the shelf out.

4 Assemble the shelf in the reverse order of the removal process.

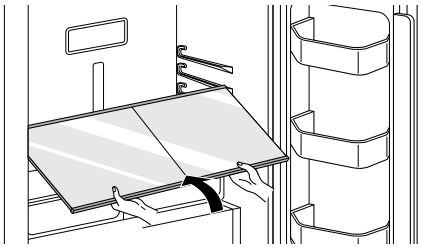

Half-Width Shelf

1 To detach a shelf, hold the adjoining shelf so that it does not move.

2 Pull the two shelves apart in the middle and tilt up the front of the shelf you want to remove until it's free from the other shelf.

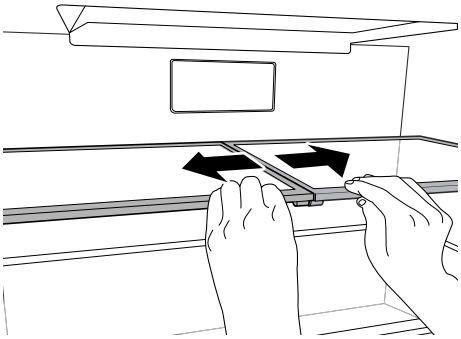

3 Support the shelf from the bottom and lift it straight up.

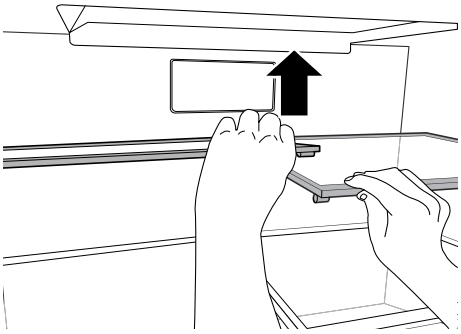

4 Pull the shelf out.

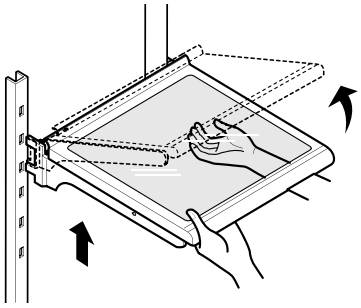

5 To assemble, tilt the front of the shelf up and guide the shelf hooks into the slots at a desired height.

6 Lower the front of the shelf so that the hooks drop into the slots.

CAUTION

- Make sure that shelves are level from one side to the other. Failure to do so may result in the shelf falling or spilled food.

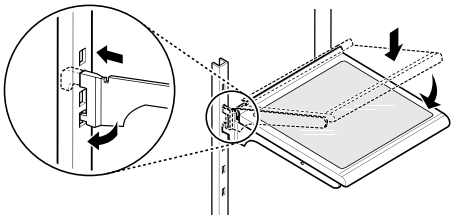

Door-in-Door

This feature is only available on some models.

The Door-in-Door compartment allows for easy access to commonly used food items.

Door-in-Door Compartment

To access the Door-in-Door compartment, pull the lever at the bottom of the door upwards until the door in door opens.

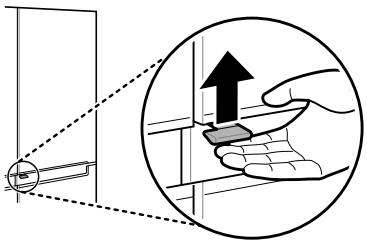

Door Bins

Detaching/Assembling Door Bins

The door bins are removable for easy cleaning and adjustment.

1 To remove the bin, simply lift the bin up and pull straight out.

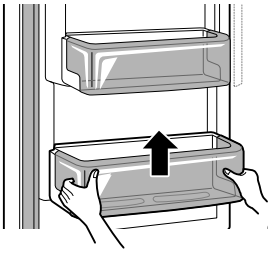

2 To assemble the bin, slide it in above the desired support and push down until it snaps into place.

CAUTION

- Regularly detach and wash the storage bins and shelves; they can become easily contaminated by food.
- Do not apply excessive force while detaching or assembling the storage bins.
- Do not use the dishwasher to clean the storage bins and shelves.

Durabase

Using the Durabase

The **Durabase** divider allows you to organize the **Durabase** area into 2 sections.

The **Durabase** may differ depending on the model.

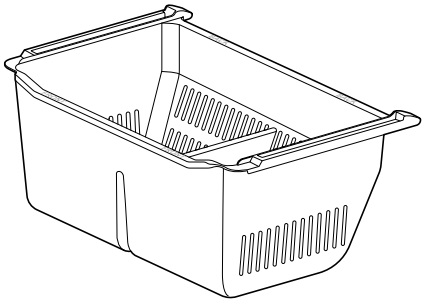

WARNING

- If the **Durabase** divider is removed, there is enough open space for children or pets to crawl inside. To prevent accidental child and pet entrapment or suffocation risk, DO NOT allow children or pets to touch or go near the drawer.

CAUTION

- The front and back of the **Durabase** are labeled on the top. Make sure to install it so that the side with the rubber drawer stops on the top is toward the inside of the freezer.

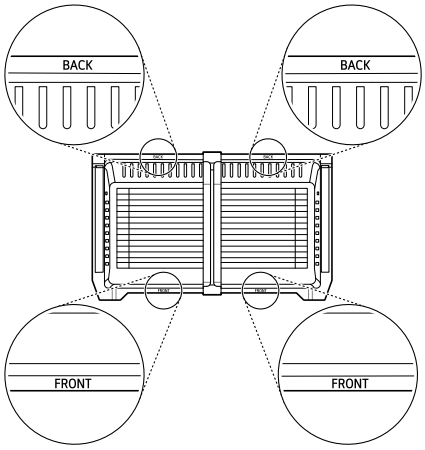

SMART FUNCTIONS

LG ThinQ Application

This feature is only available on models with Wi-Fi.

The **LG ThinQ** application allows you to communicate with the appliance using a smartphone.

LG ThinQ Application Features

† This feature is only available on some models.

- **Smart Learner**†
  - Provides a more personalized experience based on an analysis of your usage patterns.
- **Smart Sabbath**†
  - Activates or deactivates the Sabbath mode and sets the schedule for the mode activation.
- **Energy Monitoring**†
  - This feature keeps track of the refrigerator's power consumption and the number of door openings.
- **Remote Control**†
  - Controls the refrigerator temperature, air filter and Ice Plus from the smartphone application.
- **Push Messages**†
  - If the door remains open for more than ten minutes, you will receive a push message. When Ice Plus is finished, you will receive a push message.
- **Smart Diagnosis**™
  - This function provides useful information for diagnosing and solving issues with the appliance based on the pattern of use.
- **Settings**
  - Allows you to set various options on the refrigerator and in the application.

NOTE

- In the following cases, you must update the network information for each appliance in the **LG ThinQ** application under **Device Cards** ⟶ **Settings** ⟶ **Change Network**.
  - wireless router is changed
  - wireless router password is changed
  - Internet service provider is changed
- This information is current at the time of publication. The application is subject to change for product improvement purposes without notice to users.

Installing LG ThinQ Application and Connecting an LG Appliance

Models with QR Code

Scan the QR code attached to the product using the camera or a QR code reader application on your smartphone.

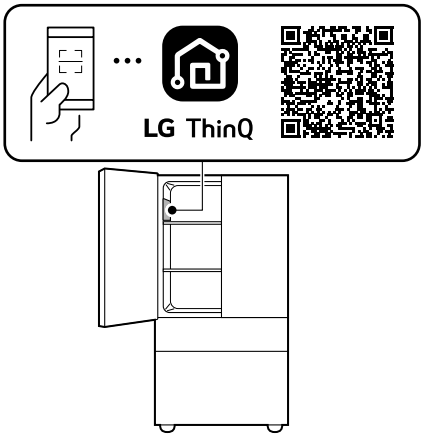

Models without QR Code

1. Search for and install the **LG ThinQ** application from the Google Play Store or Apple App Store on a smartphone.
2. Run the **LG ThinQ** application and sign in with your existing account or create an LG account to sign in.
3. Touch the add (+) button on the **LG ThinQ** application to connect your LG appliance. Follow the instructions in the application to complete the process.

NOTE

- To verify the Wi-Fi connection, check that the Wi-Fi indicator on the control panel is lit.
- The appliance supports 2.4 GHz Wi-Fi networks only. To check your network frequency, contact your Internet service provider or refer to your wireless router manual.

NOTE

- **LG ThinQ** is not responsible for any network connection problems or any faults, malfunctions, or errors caused by network connection.
- The surrounding wireless environment can make the wireless network service run slowly.
- If the distance between the appliance and the wireless router is too far, the signal becomes weak. It may take a long time to connect or fail to install the application.
- If the appliance is having trouble connecting to the Wi-Fi network, it may be too far from the router. Purchase a Wi-Fi repeater (range extender) to improve the Wi-Fi signal strength.
- The network connection may not work properly depending on the Internet service provider.
- The Wi-Fi may not connect or the connection may be interrupted because of the home network environment.
- If the appliance cannot be connected due to problems with the wireless signal transmission, unplug the appliance and wait about a minute before trying again.
- The wireless network name (SSID) should be a combination of English letters (A-Z) and numbers (0-9). Do not use special characters.
- Smartphone user interface (UI) may vary depending on the mobile operating system (OS) and the manufacturer.
- If the security protocol of the router is set to **WEP**, network setup may fail. Change the security protocol (**WPA2** is recommended), and connect the product again.
- To disable the Wi-Fi function, press and hold the **Wi-Fi** button for 3 seconds. The Wi-Fi indicator will be turned off.
- To reconnect the appliance or add another user, press and hold the **Wi-Fi** button for 3 seconds to temporarily turn it off. Run the **LG ThinQ** application and follow the instructions in the application to connect the appliance.

Radio Equipment Specifications

Type	Operating Frequency Range	Output Power (Max.)
Wireless LAN	2400 MHz - 2472 MHz	< 1 W
Bluetooth†	2400 MHz - 2483.5 MHz	

† This feature is only available on some models.

FCC Statement

The following notice covers the transmitter module contained in this product.

This equipment has been tested and found to comply with the limits for a Class B digital device, pursuant to Part 15 of the FCC Rules. These limits are designed to provide reasonable protection against harmful interference in a residential installation. This equipment generates, uses, and can radiate radio frequency energy and, if not installed and used in accordance with the instructions, may cause harmful interference to radio communications. However, there is no guarantee that interference will not occur in a particular installation. If this equipment does cause harmful interference to radio or television reception, which can be determined by turning the equipment off and on, the user is encouraged to try to correct the interference by one or more of the following measures:

- Reorient or relocate the receiving antenna.
- Increase the separation between the equipment and the receiver.
- Connect the equipment into an outlet on a circuit different from that to which the receiver is connected.
- Consult the dealer or an experienced radio/TV technician for help.

This device complies with part 15 of the FCC Rules. Operation is subject to the following two conditions:

(1) This device may not cause harmful interference and

(2) This device must accept any interference received, including interference that may cause undesired operation.

Any changes or modifications in construction of this device which are not expressly approved by the party responsible for compliance could void the user’s authority to operate the equipment.

FCC RF Radiation Exposure Statement

This equipment complies with FCC radiation exposure limits set forth for an uncontrolled environment. This transmitter must not be co-located or operating in conjunction with any other antenna or transmitter.

This equipment should be installed and operated with a minimum distance of 20 cm (7.8 inches) between the antenna and your body. Users must follow the specific operating instructions for satisfying RF exposure compliance.

Industry Canada Statement

This device contains licence-exempt transmitter(s)/ receiver(s) that comply with Innovation, Science and Economic Development Canada's licence-exempt RSS(s). Operation is subject to the following two conditions:

(1) This device may not cause interference.

(2) This device must accept any interference, including interference that may cause undesired operation of the device.

IC Radiation Exposure Statement

This equipment complies with IC radiation exposure limits set forth for an uncontrolled environment.

This equipment should be installed and operated with a minimum distance of 20 cm (7.8 inches) between the antenna and your body.

NOTE

- THE MANUFACTURER IS NOT RESPONSIBLE FOR ANY RADIO OR TV INTERFERENCE CAUSED BY UNAUTHORIZED MODIFICATIONS TO THIS EQUIPMENT. SUCH MODIFICATIONS COULD VOID THE USER'S AUTHORITY TO OPERATE THE EQUIPMENT.

Open Source Software Notice Information

To obtain the source code that is contained in this product, under GPL, LGPL, MPL, and other open source licenses that have the obligation to disclose source code, and to access all referred license terms and copyright notices, please visit https://opensource.lge.com.

LG Electronics will also provide open source code to you for a charge covering the cost of performing such distribution upon email request to opensource@lge.com.

This offer is valid to anyone in receipt of this information for a period of three years after our last shipment of this product.

Smart Grid Function

When the refrigerator operates in Smart Grid mode, the Smart Refrigerator function can control energy usage or delay the operation of some functions to save energy during peak usage periods.

- You can override the Smart Grid function any time (using the **Smart Grid** button or application).
- To use the Smart Grid function, you need to register your appliance with your electric utility company, provided that your electric utility company supports the function. In other words, the Smart Grid function will not be available if your electric utility company does not support the function or does not have the capability to support the function.

Smart Grid Application Features

- Smart Saving_Demand Response
  - You can lower energy usage based on Demand Response (DR) signals from the utility company. If the refrigerator is operating in Smart Saving mode according to the DR signal, you can see a pop up.
- Seasonal Energy Savings
  - Lower energy usage based on time period.

Using the Smart Grid Function

This feature responds to notification events from your utility company to run high energy consuming tasks during off-peak periods when demand is lower. These notification events are known as Demand Response signals.

If the refrigerator receives a Demand Response signal from the utility company, the refrigerator will turn on the Grid LED on the refrigerator display and control its power consumption according to the signal. The refrigerator will respond to the signals received from the utility company as long as product performance is maintained.

If the refrigerator receives a Demand Response signal, the refrigerator will operate in Delay

Appliance Load (DAL) or Temporary Appliance Load Reduction (TALR) mode.

Delay Appliance Load (DAL)

The refrigerator responds to a DAL signal by providing a moderate load reduction for the duration of the delay period.

This mode controls functions that consume a lot of energy such as adjusting the cooling system, running the defrost cycle, and making ice.

- When the refrigerator operates in DAL mode, the Grid LED is illuminated on the refrigerator display.
- DAL mode is automatically deactivated after the period stipulated by the DAL signal (max. 4 hours) or when you override the Smart Grid function.

Temporary Appliance Load Reduction (TALR)

The refrigerator responds to a TALR signal by aggressively reducing the load for a short time period, typically 10 minutes. This mode reduces energy consumption by stopping the compressor and controlling the functions that consume a lot of energy such as the defrost cycle and fan.

- When the refrigerator operates in TALR mode, the Grid LED is illuminated on the refrigerator display.
- TALR mode is automatically deactivated after the received duration (max. 10 minutes), or when you override the Smart Grid function. The mode is immediately deactivated and the refrigerator returns to its normal state when the door is opened or closed, or the dispenser is used.

Override Smart Grid Mode

To ignore the Demand Response signal from the utility company and override the Smart Grid function, push the Smart Grid button while the refrigerator is in Smart Grid mode.

When you override the Smart Grid function, the refrigerator ignores the Demand Response signal and is no longer controlled by the utility company until the next Demand Response signal is sent. You can also override the Smart Grid function using the smart phone app.

LG Open API

You can manage Smart Grid features for the LG Smart Refrigerator.

Please check the detailed specifications on the notice page on us.smartthinq.com.

API List

- Demand Response
  - Send demand response signal
- Power Saving
  - Set saving mode
  - Get schedule of DR/Delay Defrost
- Energy Monitoring
  - Get door open event
  - Get energy consumption
- Delay Defrost Capability
  - Insert a delay defrost schedule event
  - Update a delay defrost schedule event
  - Delete a delay defrost schedule event
  - Get the delay defrost schedule

Smart Diagnosis™ Feature

This feature is only available on some models.

Use this feature to help you diagnose and solve problems with your appliance.

NOTE

- For reasons not attributable to LGE's negligence, the service may not operate due to external factors such as, but not limited to, Wi-Fi unavailability, Wi-Fi disconnection, local app store policy, or app unavailability.
- The feature may be subject to change without prior notice and may have a different form depending on where you are located.

Using LG ThinQ to Diagnose Issues

If you experience a problem with your Wi-Fi equipped appliance, it can transmit troubleshooting data to a smartphone using the **LG ThinQ** application.

- Launch the **LG ThinQ** application and select the **Smart Diagnosis** feature in the menu. Follow the instructions provided in the **LG ThinQ** application.

Using Audible Diagnosis to Diagnose Issues

Follow the instructions below to use the audible diagnosis method.

- Launch the **LG ThinQ** application and select the **Smart Diagnosis** feature in the menu. Follow

the instructions for audible diagnosis provided in the **LG ThinQ** application.

1 Open the right refrigerator door.

2 Hold the mouthpiece of your phone in front of the speaker that is located on the right hinge of the refrigerator door.

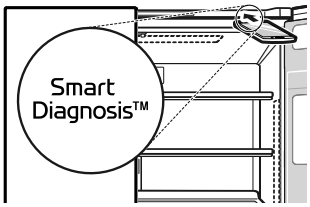

3 Press and hold the **Freezer** button for three seconds while continuing to hold your phone to the speaker.

4 After you hear three beeps, release the **Freezer** button.

5 Keep the phone in place until the tone transmission has finished. The display will count down the time. Once the countdown is over and the tones have stopped, the diagnosis will be displayed in the application.

NOTE

- For best results, do not move the phone while the tones are being transmitted.

MAINTENANCE

Cleaning

WARNING

- Use non-flammable cleaner. Failure to do so can result in fire, explosion, or death.

CAUTION

- Do not use an abrasive cloth or sponge when cleaning the interior and exterior of the refrigerator.
- Do not place your hand on the bottom surface of the refrigerator when opening and closing the doors.

General Cleaning Tips

- Both the refrigerator and freezer sections defrost automatically; however, clean both sections once a month to prevent odors.
- Wipe up spills immediately.
- Unplug the refrigerator or disconnect power before cleaning.
- Remove all removable parts, such as shelves.
- Use a clean sponge or soft cloth and a mild detergent in warm water. Do not use abrasive or harsh cleaners.
- Hand wash, rinse and dry all surfaces thoroughly.

Exterior

For products with black stainless steel exterior, spray glass cleaner on a clean microfiber cloth and rub in direction of grain. Do not spray glass cleaner directly at the display panel. Do not use harsh or abrasive cleaners.

For products with a standard stainless steel exterior, use a damp microfiber cloth and rub in the direction of the grain. Dry with a paper towel to avoid streaks. For stubborn stains and fingerprints, use a few drops of liquid dish soap in water, and rinse with hot water before drying. Do not use abrasive or harsh cleaners.

To clean products with a mirrored glass door, use the microfiber cloth that came with the product. To remove stains more easily, spray the cloth with a glass cleaner and wipe the surface.

Proximity Sensor

This feature is only available on some models.

A proximity sensor is installed on the bottom of the refrigerator door. If dust builds up on the proximity sensor, it may affect sensor performance. Clean the sensor regularly. Use a clean sponge or soft cloth and a mild detergent in warm water. Do not use glass cleaners, abrasive cleansers, or flammable fluids. These can scratch or damage the material. Dry with a paper towel to avoid streaks.

Inside Walls

- Allow the freezer to warm up so the cloth will not stick.

To help remove odors, wash the inside of the refrigerator with a mixture of baking soda and warm water. Mix 2 tablespoons of baking soda to 1 quart of water (26 g soda to 1 liter water.) Be sure the baking soda is completely dissolved so it does not scratch the surfaces of the refrigerator.

Door Liners and Gaskets

Use a clean sponge or soft cloth and a mild detergent in warm water. Do not use cleaning waxes, concentrated detergents, bleaches, or cleaners containing petroleum on plastic refrigerator parts.

Plastic Parts (Covers and Panels)

Use a clean sponge or soft cloth and a mild detergent in warm water. Do not use glass cleaners, abrasive cleansers, or flammable fluids. These can scratch or damage the material.

Condenser Coils

Use a vacuum cleaner with a brush or crevice attachment to clean the condenser cover and

vents. Do not remove the panel covering the condenser coil area.

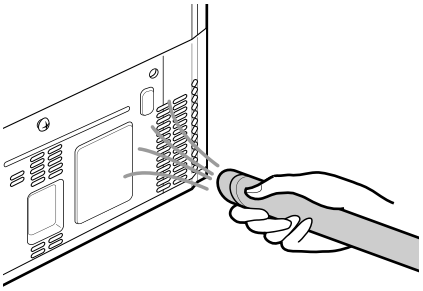

Air Filter

This feature is only available on some models.

Replacing the Air Filter

Replace the Air Filter:

- Approximately every six months.
- When the **Air Filter** indicator lights up.
- Use replacement air filter: LT120F

1 Push down on the upper left corner ❶ and up on the lower right corner ❷ of the filter cover to turn it counterclockwise. Once the tabs are released, pull the cover forward to remove it.

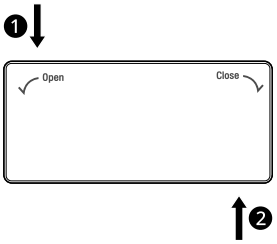

2 Remove the filter from the inside of the cover by pressing the side of the filter in and pulling the center out.

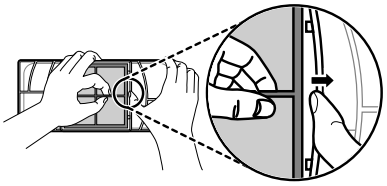

3 Place the new filter inside of the cover with the side that says **FRONT** facing outward.

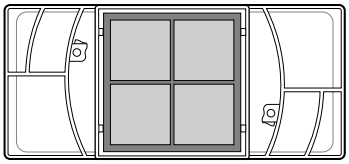

4 Align tabs ❶ on the filter cover with hooks ❷ on the refrigerator wall.

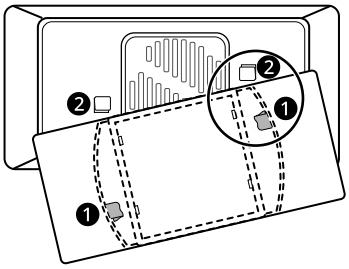

5 Rotate the air filter cover clockwise until the hooks engage and the cover locks in place.

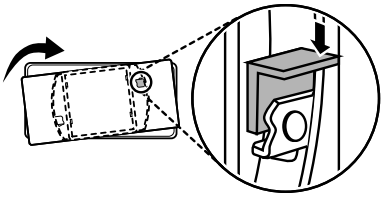

6 Press and hold the **Air Filter** button on the control panel for 3 seconds to reset the filter sensor.

Water Filter

This feature is only available on some models.

Before Replacing the Water Filter

⚠ WARNING

- To reduce the risk associated with choking, do not allow children under 3 years of age to have access to small parts during the installation of this product.
- To reduce the risk associated with the ingestion of contaminants, do not use with water that is microbiologically unsafe or of unknown quality without adequate disinfection before or after the system.
- Use of unauthorized water filters may result in product malfunction, water leakage or water quality issues, which will not be covered under the product warranty.

CAUTION

- Read and follow Use Instructions before installation and use of this system.
- Installation and use MUST comply with all state and local plumbing codes.
- Do not install if water pressure exceeds 120 psi (827 kPa). If your water pressure exceeds 80 psi, you must install a pressure limiting valve. Contact a plumber if uncertain how to check your water pressure.
- Do not install where water hammer conditions may occur. If water hammer conditions exist you must install a water hammer arrester. Contact a plumbing professional if you are uncertain how to check for this condition.
- Do not install on hot water supply lines. The maximum operating water temperature of this filter system is 100 ℉ (37.8 ℃).
- Protect filter from freezing. Drain filter when temperatures drop below 40 ℉ (4.4 ℃).
- The disposable filter cartridge MUST be replaced every 6 months, at the rated capacity or if a noticeable reduction in flow rate occurs.
- To protect it from freezing, remove filter cartridge when temperatures are expected to drop below 33 ℉ (0 ℃).
- Do not install systems in areas where ambient temperatures may go above 110 ℉ (43.3 ℃).
- Where a backflow prevention device is installed on a water system, a device for controlling pressure due to thermal expansion must be installed.
- Ensure all tubing and fittings are secure and free from leaks.

Replacing the Water Filter

- Replace the water filter:
  - Approximately every six months.
  - When the **Water Filter** indicator turns on.
  - When the water dispenser output decreases.
  - When the rated gallons of water have been dispensed.
- To purchase a replacement water filter:
  - Visit your local dealer or distributor
  - Search using "water filter" on lg.com
  - Use replacement cartridge: LT1000P, LT1000P*, LT1000PC, LT1000PCS or ADQ747935**

1 If the top shelf, located below the water filter, is in the highest position, it will need to be removed prior to replacing the water filter.

- To remove any shelf, tilt up the front of the shelf and lift it. Pull the shelf out.

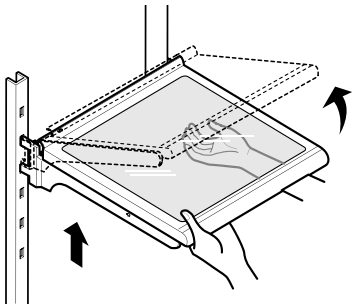

2 Pinch the sides to open the water filter cover.

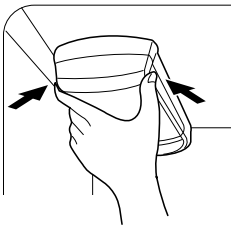

3 Pull the water filter downward and turn it counterclockwise before pulling it out.

- Make sure to rotate the filter down completely before pulling it out of the manifold hole.

NOTE

- Replacing the water filter causes a small amount of water (around 1 oz. or 25 cc) to drain.
- Wrap a cloth around the front end of the water filter cover to collect any leaking water. Hold the water filter upright, once it is removed, to prevent any remaining water from spilling out of the water filter.

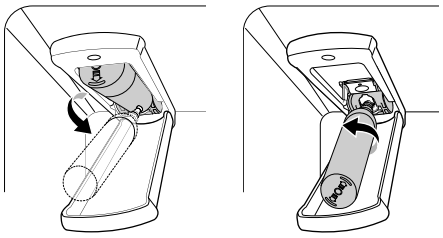

4 Replace with a new water filter.

- Take the new water filter out of its packing and remove the protective cover from the o-

rings. With the water filter tabs in the horizontal position, push the new water filter into the manifold hole and turn it clockwise until it stops.

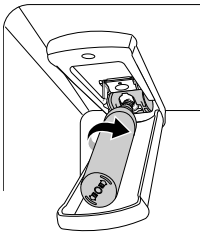

5 Close the water filter cover. The cover will click when closed correctly.

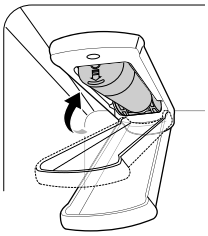

6 After the water filter is replaced,

- Models with water dispenser: dispense 2.5 gallons (10 liters) of water (flush for approximately 5 minutes) to remove trapped air and contaminants from the system.

NOTE

- Do not dispense the entire 2.5 gallon (10 liters) amount continuously. Press and release the dispenser pad for cycles of 30 seconds ON and 60 seconds OFF.

- Models without water dispenser: dispose of the first full bin of ice produced.

7 After changing the filter, press and hold the **Water Filter** button for three seconds to reset the indicator light.

CAUTION

- LG strongly recommends that you use LG-authorized water filters to prevent water quality issues, water leakage and appliance malfunction.

- For further assistance, call:
  - 1-800-243-0000 (USA)
  - 1-888-542-2623 (Canada)

Performance Data Sheet

Model: LT1000P, LT1000PC, LT1000PCS

NSF System Trade Name Code: MDJ64844601

The concentration of the indicated substances in water entering the system was reduced to a concentration less than or equal to the permissible limit for water leaving the system as specified in NSF/ANSI Standard 42, Standard 53 and Standard 401.

System tested and certified by NSF International against NSF/ANSI Standard 42, Standard 53 and Standard 401 for the reduction of substances listed below.

Substance Reduction	Average Influent Challenge	NSF Specified Challenge Concentration	Avg % Reduction	Average Product Water Concentration	Max Permissible Product Water Concentration	NSF Reduction Requirements
Chlorine Taste and Odor	2.0 µg/L	2.0 µg/L± 10 %	>97.5 %	0.050 µg/L	N/A	≥ 50.00 %
Nominal Particulate Class I, , ≥ 0.5 to < 1.0 µm	12,000,000 pts/mL	At least 10,000 particles/mL	99.80 %	24,000 pts/ml	N/A	≥ 85.00 %
Asbestos	180 MFL	10^7 to 10^8 MFL; fibers greater than 10 µg/Lin length	>99.00 %	< 1 MFL	N/A	≥ 99.00 %
Atrazine	8.5 µg/L	9.0 µg/L ± 10 %	>94.10 %	0.500 µg/L	3.0 µg/L	NA
Benzene	15.0 µg/L	15.0 µg/L ± 10 %	>96.60 %	0.510 µg/L	5.0 µg/L	NA
Carbofuran	74.0 µg/L	80.0 µg/L ± 10 %	98.30 %	1.258 µg/L	40 µg/L	NA
Lindane	1.9 µg/L	2.0 µg/L ± 10 %	>99.00 %	0.019 µg/L	0.2 µg/L	NA
P-Dichlorobenzene	230.0 µg/L	225.0 µg/L ± 10 %	>99.80 %	0.460 µg/L	75.0 µg/L	NA
2,4-D	210.0 µg/L	210.0 µg/L ± 10 %	>99.90 %	0.210 µg/L	70.0 µg/L	NA
Lead pH @6.5	140.0 µg/L	150.0 µg/L ± 10 %	99.60 %	0.560 µg/L	10.0 µg/L	NA
Lead pH @8.5	150.0 µg/L	150.0 µg/L ± 10 %	>99.70 %	<0.500 µg/L	10.0 µg/L	NA
Mercury @ pH6.5	5.9 µg/L	6.0 µg/L ± 10 %	91.00 %	0.531 µg/L	2.0 µg/L	NA
Mercury @ pH8.5	5.6 µg/L	6.0 µg/L ± 10 %	92.5 %	0.420 µg/L	2.0 µg/L	NA
Cyst*	100,000 cysts/L	Minimum 50,000 cysts/L	>99.99 %	10 cysts/L	N/A	≥ 99.95 %
Atenolol	240 ng/L	200 ± 40 % ng/L	>95.50 %	10.80 ng/L	30 ng/L	NA
Carbamazepine	1600 ng/L	1400 ± 40 % ng/L	98.40 %	25.60 ng/L	200 ng/L	NA
DEET	1600 ng/L	1400 ± 40 % ng/L	97.10 %	46.40 ng/L	200 ng/L	NA
Trimethoprim	170 ng/L	140 ± 40 % ng/L	>96.80 %	5.44 ng/L	20 ng/L	NA
Linuron	160 ng/L	140 ± 40 % ng/L	>96.60 %	5.44 ng/L	20 ng/L	NA
Phenytoin	200 ng/L	200 ± 40 % ng/L	>94.80 %	10.40 ng/L	30 ng/L	NA
Ibuprofen	400 ng/L	400 ± 40 % ng/L	>94.50 %	22.00 ng/L	60 ng/L	NA
Naproxen	140 ng/L	140 ± 40 % ng/L	>96.10 %	5.46 ng/L	20 ng/L	NA
Estrone	120 ng/L	140 ± 40 % ng/L	>96.10 %	4.68 ng/L	20 ng/L	NA
Bisphenol A	2000 ng/L	2000 ± 40 % ng/L	>98.90 %	22.00 ng/L	300 ng/L	NA
Nonyl Phenol	1600 ng/L	1400 ± 40 % ng/L	>97.10 %	46.40 ng/L	200 ng/L	NA

* Based on the use of Cryptosporidium parvum oocysts.

Guidelines for Application / Water Supply Parameters	
Service Flow	0.5 gpm (1.9 lpm)
Water Supply	Community or Private Well - Potable Water
Water Pressure	20 – 120 psi (138 – 827 kPa)
Water Temperature	33 °F – 100 °F (0.6 °C – 37.8 °C)
Capacity	200 gallons (757 liters)

It is essential that the manufacturer’s recommended installation, maintenance and filter replacement requirements be carried out for the product to perform as advertised.

NOTE

- While the testing was performed under standard laboratory conditions, actual performance may vary.

For replacement filters, visit your local dealer or distributor or search under "water filters" on the lg.com website.

For further assistance, contact the LG Electronics Customer Information Center.

USA: 1-800-243-0000

Canada: 1-888-542-2623

LG is a trademark of LG Corp.

NSF is a trademark of NSF International.

Manufactured by LG Electronics, INC:

170, Sungsanpaechoungro, Seongsan-gu, Gyeongsangnam-do, THE REPUBLIC OF KOREA

TROUBLESHOOTING

FAQs

Frequently Asked Questions

Q: What are the best temperature settings for my refrigerator and freezer?

A: The default setting for the refrigerator is 37° Fahrenheit (3° Celsius). The default setting for the freezer is 0° Fahrenheit (-18° Celsius). Adjust these settings as necessary to keep food at desired temperatures. Milk should be cold when stored on the inner shelf of the refrigerator. Ice cream should be firm and ice cubes should not melt in the freezer. To switch the display from Fahrenheit to Celsius, press and hold the **Freezer** and **Refrigerator** buttons until you hear a beep and the settings in the display change.

Q: How do I set the refrigerator and freezer temperatures?

A: Continually press the **Refrigerator** or **Freezer** button on the control panel until the desired temperature appears. The numbers will cycle from highest to lowest and then return to the highest again with continuous pressing.

Q: Why do I hear a buzzing noise from my refrigerator periodically?

A: This may happen if you do not have a water source attached to your refrigerator and the icemaker is turned on. If you do not have a water source attached to the back of the refrigerator you should turn the icemaker off.

Q: Why does the icemaker tray look crooked?

A: This is a normal part of the icemaker cycle. The icemaker tray may appear level or with a slight tilt. The change in position is to assist in the freezing process.

Q: My refrigerator is powered on and the controls are working, but it’s not cooling and the display shows “OFF” (see below). What is wrong?

A: The refrigerator is in Display Mode. The Display Mode disables all cooling in the refrigerator and freezer sections to conserve energy while on display in a retail store. When activated, OFF is displayed on the control panel and the display remains on for 20 seconds. To deactivate it, see the **Control Panel Features**.

Q: My refrigerator is on and is cooling, but none of the lights are on and the buttons don't work. The display shows "Sb".

A: The Sabbath mode is activated. (Only included on some models.) To turn it off, see the **Sabbath Mode** section.

Before Calling for Service

Review this section before calling for service; doing so will save you both time and money.

For detailed information or videos, visit www.lg.com for the troubleshooting page.

Cooling

Problem	Possible Cause & Solution
Refrigerator is not cooling or has no power.	**The refrigerator control is set to OFF (some models).** • Turn the control ON. Refer to the Setting the Controls section for proper temperature settings.
	Refrigerator is set to Demo Mode. • Demo Mode allows the lights and control display to work normally while disabling cooling, to save energy while the refrigerator is on the showroom floor. See the FAQs section of this manual for instructions on how to disable Demo Mode.
	Refrigerator is in the defrost cycle. • During the defrost cycle, the temperature of each compartment may rise slightly. Wait 30 minutes and confirm the proper temperature has been restored once the defrost cycle has completed.
	Refrigerator was recently installed. • It may take up to 24 hours for each compartment to reach the desired temperature.
	Refrigerator was recently relocated. • If the refrigerator was stored for a long period of time or moved on its side, it is necessary for the refrigerator to stand upright for 24 hours before connecting it to power.
Cooling system runs too much.	**Refrigerator is replacing an older model.** • Modern refrigerators require more operating time but use less energy due to more efficient technology.
	Refrigerator was recently plugged in or power restored. • The refrigerator will take up to 24 hours to cool completely.
	The door is opened often or a large amount of food / hot food was added. • Adding food and opening the door warms the refrigerator, requiring the compressor to run longer in order to cool the refrigerator back down. In order to conserve energy, try to get everything you need out of the refrigerator at once, keep food organized so it is easy to find, and close the door as soon as the food is removed. (Refer to the Food Storage Guide.)
	Doors are not closed completely. • Firmly push the doors shut. If they will not shut all the way, the "Doors will not close correctly or pop open" section in Troubleshooting.
	Refrigerator is installed in a hot location. • The compressor will run longer under warm conditions. At normal room temperatures (70 °F or 21 °C) expect your compressor to run about 40 % to 80 % of the time. Under warmer conditions, expect it to run even more often. The refrigerator should not be operated above 110 °F (43 °C).
	Condenser / back cover is clogged. • Use a vacuum cleaner with an attachment to clean the condenser cover and vents. Do not remove the panel covering the condenser coil area.
Interior moisture buildup.	**Doors are opened often or for long periods of time.** • When the doors are opened often or for long periods of time, warm, humid air enters the compartment. This raises the temperature and moisture level within the compartment. To lessen the effect, reduce the frequency and duration of door openings.

Problem	Possible Cause & Solution
Interior moisture buildup.	**Doors are not closed correctly.** • See the "Doors will not close correctly or pop open" section.
	Weather is humid. • Humid weather allows additional moisture to enter the compartments when the doors are opened leading to condensation or frost. Maintaining a reasonable level of humidity in the home will help to control the amount of moisture that can enter the compartments.
	Defrost cycle recently completed. • During the defrost cycle, the temperature of each compartment may rise slightly and condensation may form on the back wall. Wait 30 minutes and confirm that the proper temperature has been restored once the defrost cycle has completed.
	Food is not packaged correctly. • Food stored uncovered or unwrapped, and damp containers can lead to moisture accumulation within each compartment. Wipe all containers dry and store food in sealed packaging to prevent condensation and frost.
Food is freezing in the refrigerator compartment.	**Food with high water content was placed near an air vent.** • Rearrange items with high water content away from air vents.
	Refrigerator temperature control is set incorrectly. • If the temperature is too cold, adjust the control one increment at a time and wait for the temperature to stabilize. Refer to the Control Panel section for more information.
	Refrigerator is installed in a cold location. • When the refrigerator is operated in temperature below 41 °F (5 °C), food can freeze in the refrigerator compartment. The refrigerator should not be operated in temperature below 55 °F (13 °C).
Refrigerator or Freezer section is too cold.	**Incorrect temperature control settings.** • If the temperature is too cold, adjust the control one increment at a time and wait for the temperature to stabilize. Refer to the Control Panel for more information.
Frost or ice crystals form on frozen food (inside of sealed package).	**Condensation from food with a high water content has frozen inside of the food package.** • This is normal for food items with a high water content.
	Food has been left in the freezer for a long period of time. • Do not store food items with high water content in the freezer for a long period of time.
Frost or ice crystals form on frozen food (outside of package).	**Door is opened frequently or for long periods of time.** • When the doors are opened often or for long periods of time, warm, humid air enters the compartment. This raises the temperature and moisture level within the compartment. Increased moisture will lead to frost and condensation. To lessen the effect, reduce the frequency and duration of door openings.
	Door is not closing properly. • Refer to the "Doors will not close correctly or pop open" section in the Troubleshooting.
Refrigerator or Freezer section is too warm.	**Refrigerator was recently installed.** • It may take up to 24 hours for each compartment to reach the desired temperature.
	The air vents are blocked. Cold air circulates from the freezer to the fresh food section and back again through air vents in the wall dividing the two sections. • Locate air vents by using your hand to sense airflow and move all packages that block vents and restrict airflow. Rearrange items to allow air to flow throughout the compartment.

Problem	Possible Cause & Solution
Refrigerator or Freezer section is too warm.	**Doors are opened often or for long periods of time.** • When the doors are opened often or for long periods of time, warm, humid air enters the compartment. This raises the temperature and moisture level within the compartment. To lessen the effect, reduce the frequency and duration of door openings.
	Unit is installed in a hot location. • The refrigerator should not be operated in temperatures above 110 °F (43 °C).
	A large amount of food or hot food was added to either compartment. • Adding food warms the compartment requiring the cooling system to run. Allowing hot food to cool to room temperature before putting it in the refrigerator will reduce this effect.
	Doors are not closed correctly. • See the "Doors will not close correctly or pop open" section in the Troubleshooting.
	Temperature control is not set correctly. • If the temperature is too warm, adjust the control one increment at a time and wait for the temperature to stabilize.
	Defrost cycle has recently completed. • During the defrost cycle, the temperature of each compartment may rise slightly and condensation may form on the back wall. Wait 30 minutes and confirm the proper temperature has been restored once the defrost cycle has completed.

Craft Ice

Problem	Possible Cause & Solution
Icemaker is not making ice.	**Refrigerator was recently installed or icemaker recently connected.** • The icemaker begins producing ice approximately 48 hours after the appliance is initially installed. The first batches of ice may not be round and clear.
Icemaker is not making enough ice.	**In 3 ICE mode, the Craft Ice icemaker produces 1 batch of round ice about every 24 hours.** • For more ice, select the 6 ICE mode which produces 2 batches every 24 hours.

Ice

Problem	Possible Cause & Solution
Icemaker is not making enough ice.	**Demand exceeds ice production capacity.** • Refer to the Automatic Icemaker section for ice production capacity to check the amount of ice produced in a 24 hour period.
	House water supply is not connected, valve is not turned on fully, or valve is clogged. • Connect the refrigerator to a cold water supply with adequate pressure and turn the water shutoff valve fully open. If the problem persists, it may be necessary to contact a plumber.
	Water filter has been exhausted. • Replacing the water filter is recommended: - Approximately every six months. - When the water filter indicator turns on. - When the water dispenser output decreases. - When the ice pieces are smaller than normal.

Problem	Possible Cause & Solution
Icemaker is not making enough ice.	**Low house water supply pressure.** • The water pressure must be between 20 and 120 psi (138 and 827 kPa) on models without a water filter and between 40 and 120 psi (276 and 827 kPa) on models with a water filter. If the problem persists, it may be necessary to contact a plumber.
	Reverse osmosis filtration system is used. • Reverse osmosis filtration systems can reduce the water pressure below the minimum amount and result in icemaker issues. (Refer to the Connecting the Water Line section.)
	Tubing connecting refrigerator to house supply valve is kinked. • The tubing can kink when the refrigerator is moved during installation or cleaning resulting in reduced water flow. Straighten or repair the water supply line and arrange it to prevent future kinks.
	Doors are opened often or for long periods of time. • If the doors of the unit are opened often, ambient air will warm the refrigerator which will prevent the unit from maintaining the set temperature. Lowering the refrigerator temperature can help, as well as not opening the doors as frequently.
	Doors are not closed completely. • If the doors are not properly closed, ice production will be affected. See the "Doors will not close correctly or pop open" section in Parts & Features Troubleshooting for more information.
	The temperature setting for the freezer is too warm. • The recommended temperature for the freezer compartment for normal ice production is 0 °F (-18 °C). If the freezer temperature is warmer, ice production will be affected.
Icemaker is not making ice	**Refrigerator was recently installed or icemaker recently connected.** • It may take up to 24 hours for each compartment to reach the desired temperature and for the icemaker to begin making ice.
	Icemaker is not turned on. • Locate the icemaker ON/OFF and confirm that it is turned on.
	The ice detecting sensor is obstructed. • Foreign substances or frost on the ice-detecting sensor can interrupt ice production. Make sure that the sensor area is clean at all times for proper operation.
	The refrigerator is not connected to a water supply or the supply shutoff valve is not turned on. • Connect the refrigerator to the water supply and turn the water shutoff valve fully open.
	Icemaker shutoff (arm or sensor) obstructed. • If your icemaker is equipped with an ice shutoff arm, make sure that the arm moves freely. If your icemaker is equipped with the electronic ice shutoff sensor, make sure that there is a clear path between the two sensors.
	Reverse osmosis water filtration system is connected to your cold water supply. • Reverse osmosis filtration systems can reduce the water pressure below the minimum amount and result in icemaker issues. (Refer to the Connecting the Water Line section.)
Ice has bad taste or odor.	**Water supply contains minerals such as sulfur.** • A water filter may need to be installed to eliminate taste and odor problems. NOTE: In some cases, a filter may not help. It may not be possible to remove all minerals/odor/taste in all water supplies.
	Icemaker was recently installed. • Ice that has been stored for too long will shrink, become cloudy, and may develop a stale taste. Throw away old ice and make a new supply.

Problem	Possible Cause & Solution
Ice has bad taste or odor.	**The food has not been stored properly in either compartment.** • Rewrap the food. Odors may migrate to the ice if food is not wrapped properly.
	The interior of the refrigerator needs to be cleaned. • See the Maintenance section for more information.
	The ice storage bin needs to be cleaned. • Empty and wash the bin (discard old ice). Make sure that the bin is completely dry before reinstalling it.
Icemaker is making too much ice.	**Icemaker shutoff (arm/ sensor) is obstructed.** • Empty the ice bin. If your icemaker is equipped with an ice shutoff arm, make sure that the arm moves freely. If your icemaker is equipped with the electronic ice shutoff sensor, make sure that there is a clear path between the two sensors. Reinstall the ice bin and wait 24 hours to confirm proper operation.
Ice is not dispensing.	**Unable to hear the sound of ice coming out?** • In the control panel, select the modes for ice and crushed ice alternately to dispense the ice.
	Doors are not closed completely. • Ice will not dispense if any of the refrigerator doors are left open.
	Infrequent use of the dispenser. • Infrequent use of the ice dispenser will cause the pieces to stick together over time, which will prevent them from properly dispensing. Check the ice bin for ice pieces clumping/ sticking together. If they are, break up the ice clumps to allow for proper operation.
	The delivery chute is clogged with frost or ice fragments. • Eliminate the frost or ice fragments by removing the ice bin and clearing the chute with a plastic utensil. Dispensing ice can also help prevent frost or ice fragment buildup.
	The dispenser display is locked. • Press and hold the Lock button for three seconds to unlock the control panel and dispenser.
	Ice bin is empty. • It may take up to 24 hours for each compartment to reach the desired temperature and for the icemaker to begin making ice. Make sure that the shutoff (arm/sensor) is not obstructed. Once the ice supply in the bin has been completely exhausted, it may take up to 90 minutes before additional ice is available, and approximately 24 hours to completely refill the bin.

Parts & Features

Problem	Possible Cause & Solution
Doors will not close correctly or pop open.	**Food packages are blocking the door open.** • Rearrange food containers to clear the door and door shelves.
	Ice bin, crisper cover, pans, shelves, door bins, or baskets are out of position. • Push bins all the way in and put crisper cover, pans, shelves and baskets into their correct positions. See the Operation section for more information.
	The doors were removed during product installation and not properly replaced. • Remove and replace the doors according to the Removing and Replacing Refrigerator Handles and Doors section.
	Refrigerator is not leveled properly. • See Door Alignment in the Refrigeration Installation section to level refrigerator.

Problem	Possible Cause & Solution
Doors are difficult to open.	**The gaskets are dirty or sticky.** • Clean the gaskets and the surfaces that they touch. Rub a thin coat of appliance polish or kitchen wax on the gaskets after cleaning.
	Door was recently closed. • When you open the door, warmer air enters the refrigerator. As the warm air cools, it can create a vacuum. If the door is hard to open, wait one minute to allow the air pressure to equalize, then see if it opens more easily.
Refrigerator wobbles or seems unstable	**Leveling legs are not adjusted properly.** • Refer to the Leveling and Door Alignment section.
	Floor is not level. • It may be necessary to add shims under the leveling legs or rollers to complete installation.
Lights do not work.	**LED interior lighting failure.** • The refrigerator compartment lamp is LED interior lighting, and service should be performed by a qualified technician.
	LED door lighting failure (on some models). • The proximity sensor is located in the center of the door, and may not sense activity to the side of the door. The proximity sensor must detect a person before it will operate the LED Lighting. If the flooring material is highly reflective, or if there are highly reflective objects in front of the product, the proximity sensor which controls the LED door lighting may not function properly. • It may take 30 seconds to work normally after the refrigerator is initially installed.
Refrigerator has an unusual odor.	**The Air Filter may need to be set to the MAX setting or replaced.** • Set the Air Filter to the MAX setting. If the odor does not go away within 24 hours, the filter may need to be replaced. See the Replacing the Air Filter section for replacement instructions.
The interior of the refrigerator is covered with dust or soot.	**The refrigerator is located near a fire source, such as a fireplace, chimney, or candle.** • Make sure that the refrigerator is not located near a fire source, such as a fireplace, chimney or candle.

Noises

Problem	Possible Cause & Solution
Clicking	**The defrost control will click when the automatic defrost cycle begins and ends. The thermostat control (or refrigerator control on some models) will also click when cycling on and off.** • Normal Operation
Rattling	**Rattling noises may come from the flow of refrigerant, the water line on the back of the unit, or items stored on top of or around the refrigerator.** • Normal Operation
	Refrigerator is not resting solidly on the floor. • Floor is weak or uneven or leveling legs need to be adjusted. See the Leveling and Door Alignment section.
	Refrigerator with linear compressor was jarred while running. • Normal Operation

Problem	Possible Cause & Solution
Whooshing	**Evaporator fan motor is circulating air through the refrigerator and freezer compartments.** • Normal Operation
	Air is being forced over the condenser by the condenser fan. • Normal Operation
Gurgling	**Refrigerant flowing through the cooling system.** • Normal Operation
Popping	**Contraction and expansion of the inside walls due to changes in temperature.** • Normal Operation
Sizzling	**Water dripping on the defrost heater during a defrost cycle.** • Normal Operation
Vibrating	**If the side or back of the refrigerator is touching a cabinet or wall, some of the normal vibrations may make an audible sound.** • To eliminate the noise, make sure that the sides and back cannot vibrate against any wall or cabinet.
Dripping	**Water running into the drain pan during the defrost cycle.** • Normal Operation
Pulsating or high-pitched sound	**Your refrigerator is designed to run more efficiently to keep your food items at the desired temperature. The high efficiency compressor may cause your new refrigerator to run longer than your old one, but it is still more energy efficient than previous models. While the refrigerator is running, it is normal to hear a pulsating or high-pitched sound.** • Normal Operation

Wi-Fi

Problem	Possible Cause & Solution
Trouble connecting appliance and smartphone to Wi-Fi network	**The password for the Wi-Fi network was entered incorrectly.** • Delete your home Wi-Fi network and begin the connection process again.
	Mobile data for your smartphone is turned on. • Turn off the **Mobile data** on your smartphone before connecting the appliance.
	The wireless network name (SSID) is set incorrectly. • The wireless network name (SSID) should be a combination of English letters (A-Z) and numbers (0-9). Do not use special characters.
	The router frequency is not 2.4 GHz. • Only a 2.4 GHz router frequency is supported. Set the wireless router to 2.4 GHz and connect the appliance to the wireless router. To check the router frequency, check with your Internet service provider or the router manufacturer.
	The appliance and the router are too far apart. • If the appliance is too far from the router, the signal may be weak and the connection may not be configured correctly. Move the router closer to the appliance or purchase and install a Wi-Fi repeater.

Problem	Possible Cause & Solution
Trouble connecting appliance and smartphone to Wi-Fi network	**During Wi-Fi setup, the app is requesting a password to connect to the product (on certain phones).** • Locate the network name which starts with "LG" under Settings > Networks. Note the last part of the network name. - If the network name looks like LGE_Appliance_XX-XX-XX, enter lge12345. - If the network name looks like LGE_Appliance_XXXX, enter XXXX twice as your password. For example, if the network name appears as LGE_Appliance_8b92, then you would enter 8b928b92 as your password. In this instance, the password is case sensitive and the last 4 characters are unique to your appliance.

Error Codes

Problem	Possible Cause & Solution
"Sb" appears on the display. Refrigerator is running but control panel is inactive.	**The Sabbath mode is activated.** • Some models feature a Sabbath mode for use during the Jewish Sabbath and Holidays. See the Sabbath Mode section of the manual for instructions on activating and deactivating this mode.

LIMITED WARRANTY

USA

TERMS AND CONDITIONS

ARBITRATION NOTICE: THIS LIMITED WARRANTY CONTAINS AN ARBITRATION PROVISION THAT REQUIRES YOU AND LG ELECTRONICS (“LG”) TO RESOLVE DISPUTES BY BINDING ARBITRATION INSTEAD OF IN COURT, UNLESS YOU CHOOSE TO OPT OUT. IN ARBITRATION, CLASS ACTIONS AND JURY TRIALS ARE NOT PERMITTED. PLEASE SEE THE SECTION TITLED “PROCEDURE FOR RESOLVING DISPUTES” BELOW.

Should your LG Refrigerator ("Product") fail due to a defect in materials or workmanship under normal and proper use, during the warranty period set forth below, LG will, at its option, repair or replace the Product. This limited warranty is valid only to the original retail purchaser of the Product ("You") and applies only when purchased lawfully and used within the United States including U.S. Territories.

WARRANTY PERIOD			
Product	**Sealed System (Condenser, Dryer, Connecting Tube and Evaporator)**	**Compressor**	
One (1) year from the date of original retail purchase, or from the date of delivery as per applicable law	Five (5) years from the date of original retail purchase, or from the date of delivery as per applicable law	Five (5) years from the date of original retail purchase, or from the date of delivery as per applicable law	Linear / Inverter Compressor Only : Parts Only for years 6-10 from the date of original retail purchase, or from the date of delivery as per applicable law (You will be charged for labor.)
Parts and Labor (internal/ functional parts only)	Parts and Labor	Parts and Labor	

- Replacement Products and parts are warranted for the remaining portion of the original warranty period or ninety (90) days, whichever is greater.
- Replacement Products and parts may be new, reconditioned, refurbished, or otherwise factory remanufactured.
- Replaced Product or part(s) will be the property of LG.
- Proof of original retail purchase specifying the Product model and date of purchase is required to obtain warranty service under this limited warranty.

EXCEPT TO THE EXTENT PROHIBITED BY APPLICABLE LAW, ANY IMPLIED WARRANTY OF MERCHANTABILITY OR FITNESS FOR A PARTICULAR PURPOSE ON THE PRODUCT IS LIMITED IN DURATION TO THE DURATION OF THE ABOVE LIMITED WARRANTY. UNDER NO CIRCUMSTANCES SHALL LG OR ITS U.S. DISTRIBUTORS/DEALERS BE LIABLE FOR ANY INDIRECT, INCIDENTAL, CONSEQUENTIAL, SPECIAL, OR PUNITIVE DAMAGES, INCLUDING, WITHOUT LIMITATION, LOST GOODWILL, LOST REVENUES OR PROFITS, WORK STOPPAGE, IMPAIRMENT OF OTHER GOODS, COST OF REMOVAL AND REINSTALLATION OF THE PRODUCT, LOSS OF USE, OR ANY OTHER DAMAGES WHETHER BASED IN CONTRACT, TORT, OR OTHERWISE. LG’S TOTAL LIABILITY, IF ANY, SHALL NOT EXCEED THE PURCHASE PRICE PAID BY YOU FOR THE PRODUCT.

SOME STATES DO NOT ALLOW THE EXCLUSION OR LIMITATION OF INCIDENTAL OR CONSEQUENTIAL DAMAGES OR LIMITATIONS ON HOW LONG AN IMPLIED WARRANTY LASTS, SO THE ABOVE EXCLUSIONS OR LIMITATIONS MAY NOT APPLY TO YOU. THIS LIMITED WARRANTY GIVES YOU SPECIFIC LEGAL RIGHTS AND YOU MAY ALSO HAVE OTHER RIGHTS THAT VARY FROM STATE TO STATE.

THIS LIMITED WARRANTY DOES NOT COVER:

- Service trips to deliver, pick up, or install, educate how to operate, correct wiring, or correct unauthorized repairs.
- Damage or failure of the Product to perform during power failures and interrupted or inadequate electrical service.
- Damage or failure of the Product caused by leaky or broken water pipes, frozen water pipes, restricted drain lines, inadequate or interrupted water supply or inadequate supply of air.
- Damage or failure of the Product resulting from operating the Product in a corrosive atmosphere or contrary to the Product owner’s manual.
- Damage or failure of the Product caused by accidents, pests and vermin, lightning, wind, fire, floods, acts of nature, or any other causes beyond the control of LG.
- Damage or failure of the Product caused by unauthorized modification or alteration, or if the Product is used for other than the intended purpose, or any water leakage where the Product was not properly installed.
- Damage or failure of the Product caused by incorrect electrical current, voltage, or plumbing codes.
- Damage or failure of the Product caused by transportation, storage, and/or handling, including scratches, dents, chips, and/or other damage to the finish of the Product, unless such damage is reported within one (1) week of delivery.
- Damage or failure of the Product resulting from misuse, abuse, improper installation, repair, or maintenance. Improper repair includes the use of parts not authorized by LG. Improper installation or maintenance includes installation or maintenance contrary to the Product owner’s manual.
- Damage or failure of the Product caused by the use of parts, components, accessories, consumable cleaning products, or any other products or services that were not authorized by LG.
- Damage or missing items to any display or open box Product.
- Refurbished Product or any Product sold “As Is”, “Where Is”, “With all Faults”, or similar disclaimer.
- Products with original serial numbers that have been removed, altered, or cannot be readily determined.
- Increases in utility costs and additional utility expenses.
- Any noises associated with normal operation.
- Products used for other than normal and proper household use (e.g., commercial, business, or industrial settings, including any retail or food service establishments, or any commercial lodging/transient rental setting), or any use contrary to the Product owner's manual.
- Costs associated with removal and reinstallation of the Product for repairs, or the removal and reinstallation of the Product if it is installed in an inaccessible location or not installed in accordance with the Product Owner's manual.
- Accessories, removable components, or consumable parts (e.g. Shelves, door bins, drawers, water/air filters, racks, light bulbs, batteries, etc., as applicable), except for internal/functional parts covered under this limited warranty.

The cost of repair or replacement under these excluded circumstances shall be borne by You.

TO OBTAIN WARRANTY SERVICE AND ADDITIONAL INFORMATION

Call 1-800-243-0000 and select the appropriate option from the menu.

Or visit our website at http://www.lg.com

Or by mail: LG Electronics Customer Service P.O. Box 240007 Huntsville, AL 35813 ATTN: CIC

PROCEDURE FOR RESOLVING DISPUTES:

ALL DISPUTES BETWEEN YOU AND LG ARISING OUT OF OR RELATING IN ANY WAY TO THIS LIMITED WARRANTY OR THE PRODUCT SHALL BE RESOLVED EXCLUSIVELY THROUGH BINDING ARBITRATION, AND NOT IN A COURT OF GENERAL JURISDICTION. BINDING ARBITRATION MEANS THAT YOU AND LG ARE EACH WAIVING THE RIGHT TO A JURY TRIAL AND TO BRING OR PARTICIPATE IN A CLASS ACTION.

Definitions. For the purposes of this section, references to “LG” mean LG Electronics U.S.A., Inc., its parents, subsidiaries and affiliates, and each of their officers, directors, employees, agents, beneficiaries, predecessors in interest, successors, assigns and suppliers; references to “dispute” or “claim” shall include any dispute, claim or controversy of any kind whatsoever (whether based in contract, tort, statute, regulation, ordinance, fraud, misrepresentation or any other legal or equitable theory) arising out of or relating in any way to the sale, condition or performance of the product or this Limited Warranty.

Notice of Dispute. In the event you intend to commence an arbitration proceeding, you must first notify LG in writing at least 30 days in advance of initiating the arbitration by sending a letter to LG at LG Electronics, USA, Inc. Attn: Legal Department- Arbitration 111 Sylvan Avenue, Englewood Cliffs, NJ 07632. You and LG agree to engage in good faith discussions in an attempt to amicably resolve your claim. The notice must provide your name, address, and telephone number; identify the product that is the subject of the claim; and describe the nature of the claim and the relief being sought. If you and LG are unable to resolve the dispute within 30 days, either party may proceed to file a claim for arbitration.

Agreement to Binding Arbitration and Class Action Waiver. Upon failure to resolve the dispute during the 30 day period after sending written notice to LG, you and LG agree to resolve any claims between us only by binding arbitration on an individual basis, unless you opt out as provided below. Any dispute between you and LG shall not be combined or consolidated with a dispute involving any other person’s or entity’s product or claim. More specifically, without limitation of the foregoing, any dispute between you and LG shall not under any circumstances proceed as part of a class or representative action. Instead of arbitration, either party may bring an individual action in small claims court, but that small claims court action may not be brought on a class or representative basis.

Arbitration Rules and Procedures. To begin arbitration of a claim, either you or LG must make a written demand for arbitration. The arbitration will be administered by the American Arbitration Association (“AAA”) and will be conducted before a single arbitrator under the AAA’s Consumer Arbitration Rules that are in effect at the time the arbitration is initiated (referred to as the “AAA Rules”) and under the procedures set forth in this section. The AAA Rules are available online at www.adr.org/consumer. Send a copy of your written demand for arbitration, as well as a copy of this provision, to the AAA in the manner described in the AAA Rules. You must also send a copy of your written demand to LG at LG Electronics, USA, Inc. Attn: Legal Department- Arbitration 111 Sylvan Avenue, Englewood Cliffs, NJ 07632. If there is a conflict between the AAA Rules and the rules set forth in this section, the rules set forth in this section will govern. This arbitration provision is governed by the Federal Arbitration Act. Judgment may be entered on the arbitrator’s award in any court of competent jurisdiction. All issues are for the arbitrator to decide, except that issues relating to the scope and enforceability of the arbitration provision and to the arbitrability of the dispute are for the court to decide. The arbitrator is bound by the terms of this provision.

Governing Law. The law of the state of your residence shall govern this Limited Warranty and any disputes between us except to the extent that such law is preempted by or inconsistent with applicable federal law.

Fees/Costs. You do not need to pay any fee to begin an arbitration. Upon receipt of your written demand for arbitration, LG will promptly pay all arbitration filing fees to the AAA unless you seek more than $25,000 in damages, in which case the payment of these fees will be governed by the AAA Rules. Except as otherwise provided for herein, LG will pay all AAA filing, administration and arbitrator fees for any arbitration initiated in accordance with the AAA Rules and this arbitration provision. If you prevail in the arbitration, LG will pay your attorneys’ fees and expenses as long as they are reasonable, by considering factors including, but not limited to, the purchase amount and claim amount. Notwithstanding the foregoing, if applicable law allows for an award of reasonable attorneys’ fees and expenses, an arbitrator can award them to the same extent that a court would. If the arbitrator finds either the substance of your claim or the relief sought in the demand is frivolous or brought for an improper purpose (as measured by the standards set forth in Federal Rule of Civil Procedure 11(b)), then the payment of all arbitration fees will be governed by the AAA Rules. In such a situation, you agree to reimburse LG for all monies previously disbursed by it that are otherwise your obligation to pay under the AAA Rules. Except as otherwise provided for, LG waives any rights it may have to seek attorneys’ fees and expenses from you if LG prevails in the arbitration.

Hearings and Location. If your claim is for $25,000 or less, you may choose to have the arbitration conducted solely on the basis of (1) documents submitted to the arbitrator, (2) through a telephonic hearing, or (3) by an in-person hearing as established by the AAA Rules. If your claim exceeds $25,000, the right to a hearing will be determined by the AAA Rules. Any in-person arbitration hearings will be held at a

location within the federal judicial district in which you reside unless we both agree to another location or we agree to a telephonic arbitration.

Opt Out. You may opt out of this dispute resolution procedure. If you opt out, neither you nor LG can require the other to participate in an arbitration proceeding. To opt out, you must send notice to LG no later than 30 calendar days from the date of the first consumer purchaser's purchase of the product by either: (i) sending an e-mail to optout@lge.com, with the subject line: "Arbitration Opt Out" or (ii) calling 1-800-980-2973. You must include in the opt out e-mail or provide by telephone: (a) your name and address; (b) the date on which the product was purchased; (c) the product model name or model number; and (d) the serial number (the serial number can be found (i) on the product; or (ii) online by accessing https://www.lg.com/us/support and clicking on "How do I find my model number?").

You may only opt out of the dispute resolution procedure in the manner described above (that is, by e-mail or telephone); no other form of notice will be effective to opt out of this dispute resolution procedure. Opting out of this dispute resolution procedure will not affect the coverage of the Limited Warranty in any way, and you will continue to enjoy the full benefits of the Limited Warranty. If you keep this product and do not opt out, then you accept all terms and conditions of the arbitration provision described above.

CANADA

TERMS AND CONDITIONS

ARBITRATION NOTICE: THIS LIMITED WARRANTY CONTAINS AN ARBITRATION PROVISION THAT REQUIRES YOU AND LG TO RESOLVE DISPUTES BY BINDING ARBITRATION INSTEAD OF IN COURT, UNLESS THE LAWS OF YOUR PROVINCE OR TERRITORY DO NOT PERMIT THAT, OR, IN OTHER JURISDICTIONS, IF YOU CHOOSE TO OPT OUT. FOR FURTHER CLARITY, THIS ARBITRATION PROVISION IS NOT APPLICABLE TO CONSUMERS RESIDING IN ONTARIO, BRITISH COLUMBIA OR QUÉBEC. IN ARBITRATION, CLASS ACTIONS AND JURY TRIALS ARE NOT PERMITTED. PLEASE SEE THE SECTION TITLED “PROCEDURE FOR RESOLVING DISPUTES” BELOW.

QUEBEC ONLY: LG stands behind its products and makes every reasonable effort to ensure its products can be maintained and repaired, as required. You may access the catalogue of available parts and services at https://www.lg.com/ca_en/support/. HOWEVER, LG IN NO WAY GUARANTEES AND MAKES NO REPRESENTATIONS REGARDING THE AVAILABILITY OF ANY SPECIFIC SPARE OR REPLACEMENT PART, REPAIR SERVICE OR INFORMATION OR INSTRUCTIONS FOR SUCH MAINTENANCE AT ANY TIME. LG EXPRESSLY DISCLAIMS ANY GUARANTEE, WARRANTY OR OBLIGATION IN RESPECT OF THAT AVAILABILITY.

Should your LG Refrigerator ("Product") fail due to a defect in materials or workmanship under normal and proper use, during the warranty period set forth below, LG Electronics Canada, Inc. ("LGECI") will, at its option, repair, replace or pro rate the Product upon receipt of proof of the original retail purchase. This limited warranty is valid only to the original retail purchaser of the Product and applies only to a Product distributed, purchased from an authorized retailer and used within Canada, as determined at the sole discretion of LGECI.

WARRANTY PERIOD (Note: If the original date of purchase cannot be verified, the warranty will begin sixty (60) days from the date of manufacture)			
Product	**Sealed System (Condenser, Dryer, Connecting Tube and Evaporator)**		**Linear / Inverter Compressor**
One (1) year from the date of original retail purchase	One (1) year from the date of original retail purchase	Seven (7) years from the date of original retail purchase	Ten (10) years from the date of original retail purchase
Parts and Labor (internal/ functional parts only)	Parts and Labor	Parts only (Consumer will be charged for labor)	Part only (Consumer will be charged for labor)

- Replacement products and parts are warranted for the remaining portion of the original warranty period or ninety (90) days, whichever is greater.
- Replacement products and parts may be new, reconditioned, refurbished, or otherwise factory remanufactured, all at the sole discretion of LGECI.
- Proof of original retail purchase specifying the Product model and date of purchase is required to obtain warranty service under this Limited Warranty.

DISCLAIMER:

IF YOU ARE A CONSUMER SUBJECT TO QUÉBEC, BRITISH COLUMBIA OR ONTARIO’S CONSUMER PROTECTION LEGISLATION, THE EXCLUSION OF WARRANTIES CONTAINED IN THIS SECTION DO NOT EXCLUDE OR LIMIT THE RIGHTS AND REMEDIES THAT YOU MAY HAVE UNDER SUCH ACT, INCLUDING THE RIGHT TO MAKE A CLAIM UNDER ANY OF THE STATUTORY WARRANTIES PROVIDED THEREUNDER.

LGECI’S SOLE LIABILITY IS LIMITED TO THE LIMITED WARRANTY SET OUT ABOVE, UNLESS SUCH LIMITATION IS PROHIBITED BY THE LAWS OF THE PROVINCE IN WHICH YOU RESIDE. EXCEPT AS EXPRESSLY PROVIDED ABOVE, OR IF OTHERWISE PROHIBITED BY THE LAW OF THE PROVINCE IN WHICH YOU RESIDE, LGECI DOES NOT MAKE ANY OTHER WARRANTIES OR CONDITIONS RESPECTING THE PRODUCT, AND HEREBY DISCLAIMS, ALL OTHER WARRANTIES AND CONDITIONS RESPECTING THE PRODUCT, WHETHER EXPRESS OR IMPLIED, INCLUDING BUT NOT LIMITED TO, ANY IMPLIED WARRANTY OR CONDITION OF MERCHANTABILITY OR FITNESS FOR A PARTICULAR PURPOSE, AND NO REPRESENTATIONS SHALL BE BINDING ON LGECI. LGECI DOES NOT AUTHORIZE ANY PERSON TO CREATE OR ASSUME FOR IT ANY OTHER WARRANTY OBLIGATION OR LIABILITY IN CONNECTION

WITH THE PRODUCT. TO THE EXTENT THAT ANY WARRANTY OR CONDITION IS IMPLIED BY LAW, IT IS LIMITED TO THE WARRANTY PERIOD SET OUT ABOVE. UNDER NO CIRCUMSTANCES SHALL LGECI, THE MANUFACTURER OR DISTRIBUTOR OF THE PRODUCT, BE LIABLE FOR ANY INCIDENTAL, CONSEQUENTIAL, SPECIAL, DIRECT, INDIRECT, PUNITIVE OR EXEMPLARY DAMAGES, INCLUDING, WITHOUT LIMITATION, LOSS OF GOODWILL, LOST PROFITS, LOSS OF ANTICIPATED PROFITS, LOST REVENUE, LOSS OF USE, OR ANY OTHER DAMAGE, WHETHER ARISING DIRECTLY OR INDIRECTLY FROM ANY CONTRACTUAL BREACH, FUNDAMENTAL BREACH, TORT OR OTHERWISE, OR FROM ANY ACTS OR OMISSIONS. LGECI'S TOTAL LIABILITY, IF ANY, SHALL NOT EXCEED THE PURCHASE PRICE PAID BY YOU FOR THE PRODUCT.

This Limited Warranty gives you specific legal rights. You may also have other rights that vary from province to province depending on applicable provincial laws. Any term of this Limited Warranty that negates or varies any implied condition or warranty under provincial law is severable where it conflicts with such provincial law without affecting the remainder of this warranty's terms.

THIS LIMITED WARRANTY DOES NOT COVER:

- Service trips to i) deliver, pick up, or install or; educate on how to operate the Product; ii) correct wiring or plumbing; or iii) correct unauthorized repairs or installations of the Product;
- Damage or failure of the Product to perform during power failures and interrupted or inadequate electrical service;
- Damage or failure caused by leaky or broken water pipes, frozen water pipes, restricted drain lines, inadequate or interrupted water supply or inadequate supply of air;
- Damage or failure resulting from operating the Product in a corrosive atmosphere or contrary to the instructions outlined in the Product's owner's manual;
- Damage or failure to the Product caused by accidents, pests and vermin, lightning, wind, fire, floods, acts of God, or any other causes beyond the control of LGECI or the manufacturer;
- Damage or failure resulting from misuse, abuse, improper installation, repair, or maintenance of the Product. Improper repair includes use of parts not authorized or specified by LGECI. Improper installation or maintenance includes installation or maintenance contrary to the Product's owner's manual;.
- Damage or failure caused by unauthorized modification or alteration of the Product, or if used for other than the intended household purpose/use of the Product, or damage or failure resulting from any water leakage due to improper installation of the Product;
- Damage or failure caused by incorrect electrical current, voltage or plumbing codes;
- Damage or failure caused by use that is other than normal household use, including, without limitation, commercial or industrial use, including use in commercial offices or recreational facilities, or as otherwise outlined in the Product's owner's manual;
- Damage or failure caused by the use of any accessories, components or cleaning products, including, without limitation, water filters, that are not approved/authorized by LGECI;
- Replacement of the water filter cartridge due to water pressure that is outside the specified operating range or due to excessive sediment in the water supply;
- Damage or failure caused by transportation and handling, including scratches, dents, chips and/or other damage to the finish of the Product, unless such damage results from defects in materials or workmanship and is reported to LGECI within one (1) week of delivery of the Products;
- Damage or missing items to any display, open box, refurbished or discounted Product;
- Refurbished Product or any Product sold "As Is", "Where Is", "With all Faults", or any similar disclaimer;
- Products with original serial numbers that have been removed, altered or cannot be readily determined at the discretion of LGECI;
- Increases in utility costs and additional utility expenses in any way associated with the Product;
- Any noises associated with normal operation of the Product;
- Replacement of light bulbs, filters, fuses or any other consumable parts;
- Replacement of any part that was not originally included with the Product;

- Costs associated with removal and/or reinstallation of the Product for repairs; and
- Shelves, door bins, drawers, handle and accessories to the Product, except for internal/functional parts covered under this Limited Warranty.
- Coverage for "in Home" repairs, for products in-warranty, will be provided if the Product is within a 150 km radius from the nearest authorized service center (ASC), as determined by LG Canada. If your Product is located outside a 150 km radius from a ASC, as determined by LG Canada, it will be your responsibility to bring the Product, at your sole expense, to the ASC for in-warranty repair.

All costs and expenses associated with the above excluded circumstances, listed under the heading, This Limited Warranty Does Not Cover, shall be borne by the consumer.

TO OBTAIN WARRANTY SERVICE AND ADDITIONAL INFORMATION, PLEASE CALL OR VISIT OUR WEBSITE:

Call 1-888-542-2623 (8 am - 9 pm EST, 365 days) and select the appropriate option from the menu, or visit our website at **http://www.lg.com**

PROCEDURE FOR RESOLVING DISPUTES:

EXCEPT WHERE PROHIBITED AT LAW (INCLUDING WITH RESPECT TO QUÉBEC, BRITISH COLUMBIA AND ONTARIO CONSUMERS), ALL DISPUTES BETWEEN YOU AND LG ARISING OUT OF OR RELATING IN ANY WAY TO THIS LIMITED WARRANTY OR THE PRODUCT SHALL BE RESOLVED EXCLUSIVELY THROUGH BINDING ARBITRATION, AND NOT IN A COURT OF GENERAL JURISDICTION. EXCEPT WHERE PROHIBITED AT LAW (INCLUDING WITH RESPECT TO QUÉBEC, BRITISH COLUMBIA AND ONTARIO CONSUMERS), YOU AND LG BOTH IRREVOCABLY AGREE TO WAIVE THE RIGHT TO A JURY TRIAL AND TO BRING OR PARTICIPATE IN A CLASS ACTION.

Definitions. For the purposes of this section, references to “LG” mean LG Electronics Canada, Inc., its parents, subsidiaries and affiliates, and each of their officers, directors, employees, agents, beneficiaries, predecessors in interest, successors, assigns and suppliers; references to “dispute” or “claim” shall include any dispute, claim or controversy of any kind whatsoever (whether based in contract, tort, statute, regulation, ordinance, fraud, misrepresentation or any other legal or equitable theory) arising out of or relating in any way to the sale, condition or performance of the product or this Limited Warranty.

Notice of Dispute. In the event you intend to commence an arbitration proceeding, you must first notify LG in writing at least 30 days in advance of initiating the arbitration by sending a letter to LGECI Legal Team at 20 Norelco Drive, North York, Ontario, Canada M9L 2X6 (the “Notice of Dispute”). You and LG agree to engage in good faith discussions in an attempt to amicably resolve your claim. The notice must provide your name, address, and telephone number; identify the product that is the subject of the claim; and describe the nature of the claim and the relief being sought. If you and LG are unable to resolve the dispute within 30 days of LG’s receipt of the Notice of Dispute, the dispute shall be resolved by binding arbitration in accordance with the procedure set out herein. You and LG both agree that, during the arbitration proceeding, the terms (including any amount) of any settlement offer made by either you or LG will not be disclosed to the arbitrator until the arbitrator determines the dispute.

Agreement to Binding Arbitration and Class Action Waiver. Upon failure to resolve the dispute during the 30 day period after LG’s receipt of the Notice of Dispute, you and LG agree to resolve any claims between you and LG only by binding arbitration on an individual basis, unless you opt out as provided below, or you reside in a jurisdiction that prevents full application of this clause in the circumstances of the claims at issue (in which case if you are a consumer, this clause will only apply if you expressly agree to the arbitration). To the extent permitted by applicable law, any dispute between you and LG shall not be combined or consolidated with a dispute involving any other person’s or entity’s product or claim. More specifically, without limitation of the foregoing, except to the extent such a prohibition is not permitted at law, any dispute between you and LG shall not under any circumstances proceed as part of a class or representative action. Instead of arbitration, either party may bring an individual action in small claims court, but that small claims court action may not be brought on a class or representative basis except to the extent this prohibition is not permitted at law in your province or territory of jurisdiction as it relates to the claims at issue between you and LG. This does not apply to consumers in Ontario, British Columbia and Québec. In accordance with provincial legislation, the consumer and LG may agree to resolve the dispute using any procedure available, including commencing the action before the competent courts of those provinces.

Arbitration Rules and Procedures. To begin arbitration of a claim, either you or LG must make a written demand for arbitration. The arbitration will be private and confidential, and conducted on a simplified and expedited basis before a single arbitrator chosen by the parties under the provincial or territorial commercial arbitration law and rules of the province or territory of your residence. You must also send a copy of your written demand to LG at LG Electronics, Canada, Inc., Attn: Legal Department- Arbitration, 20 Norelco Drive, North York, Ontario M9L 2X6. This arbitration provision is governed by your applicable provincial or territorial commercial arbitration legislation. For consumers in Ontario, British Columbia and Québec, the applicable arbitration legislation only applies if consumers agree to submit the dispute to arbitration. Judgment may be entered on the arbitrator's award in any court of competent jurisdiction. All issues are for the arbitrator to decide, except that, issues relating to the scope and enforceability of the arbitration provision and to the arbitrability of the dispute are for the court to decide. The arbitrator is bound by the terms of this provision.

Governing Law. The law of the province or territory of your purchase shall govern this Limited Warranty and any disputes between you and LG except to the extent that such law is preempted by or inconsistent with applicable federal or provincial/territorial law. Should arbitration not be permitted for any claim, action, dispute or controversy between you and LG, you and LG attorn to the exclusive jurisdiction of the courts of the province or territory of your purchase for the resolution of the claim, action, dispute or controversy between you and LG.

Fees/Costs. You do not need to pay any fee to begin an arbitration. Upon receipt of your written demand for arbitration, LG will promptly pay all arbitration filing fees unless you seek more than $25,000 in damages, in which case the payment of these fees will be governed by the applicable arbitration rules. Except as otherwise provided for herein, LG will pay all filing, administration and arbitrator fees for any arbitration initiated in accordance with the applicable arbitration rules and this arbitration provision. If you prevail in the arbitration, LG will pay your attorneys' fees and expenses as long as they are reasonable, by considering factors including, but not limited to, the purchase amount and claim amount. Notwithstanding the foregoing, if applicable law allows for an award of reasonable attorneys' fees and expenses, an arbitrator can award them to the same extent that a court would. If the arbitrator finds either the substance of your claim or the relief sought in the demand is frivolous or brought for an improper purpose (as measured by the applicable laws), then the payment of all arbitration fees will be governed by the applicable arbitration rules. In such a situation, you agree to reimburse LG for all monies previously disbursed by it that are otherwise your obligation to pay under the applicable arbitration rules. Except as otherwise provided for, LG waives any rights it may have to seek attorneys' fees and expenses from you if LG prevails in the arbitration.

Hearings and Location. If your claim is for $25,000 or less, you may choose to have the arbitration conducted solely (1) on the basis of documents submitted to the arbitrator, (2) through a telephonic hearing, or (3) by an in-person hearing as established by the applicable arbitration rules. If your claim exceeds $25,000, the right to a hearing will be determined by the applicable arbitration rules. Any in-person arbitration hearings will be held at the nearest, most mutually-convenient arbitration location available within the province or territory in which you reside unless you and LG both agree to another location or agree to a telephonic arbitration.

Severability and Waiver. If any portion of this Limited Warranty (including these arbitration procedures) is unenforceable, the remaining provisions will continue in full force and effect to the maximum extent permitted by applicable law. Should LG fail to enforce strict performance of any provision of this Limited Warranty (including these arbitration procedures), it does not mean that LG intends to waive or has waived any provision or part of this Limited Warranty.

Opt Out. The arbitration provision requires you and LG to resolve disputes by binding arbitration instead of court, unless the laws of your province or territory do not permit that, or, in other jurisdictions, if you choose to opt out. The arbitration provision does not apply to consumers in Ontario, British Columbia and Québec.

For individuals that fall within the binding arbitration provisions, you may opt out of this dispute resolution procedure. If you opt out, neither you nor LG can require the other to participate in an arbitration proceeding. To opt out, you must send notice to LG no later than 30 calendar days from the date of the first consumer purchaser's purchase of the product by either (i) sending an e-mail to optout@lge.com, with the subject line: "Arbitration Opt Out;" or (ii) calling 1- 800-980-2973. You must include in the opt out e-mail or provide by telephone: (a) your name and address; (b) the date on which the product was purchased; (c) the product model name or model number; and (d) the serial number (the serial number can be found (i) on the product; or (ii) online by accessing https://www.lg.com/ca_en/findmodel_serial/).

In the event that you “Opt Out”, the law of the province or territory of your residence shall govern this Limited Warranty and any disputes between you and LG except to the extent that such law is preempted by or inconsistent with applicable federal or provincial/territorial law. Should arbitration not be permitted for any claim, action, dispute or controversy between you and LG, you and LG agree to attorn to the exclusive jurisdiction of the courts of the province or territory of your residence for the resolution of the claim, action, dispute or controversy between you and LG.

You may only opt out of the dispute resolution procedure in the manner described above (that is, by e-mail or telephone); no other form of notice will be effective to opt out of this dispute resolution procedure. Opting out of this dispute resolution procedure will not affect the coverage of the Limited Warranty in any way, and you will continue to enjoy the full benefits of the Limited Warranty. If you keep this product and do not opt out, then you accept all terms and conditions of the arbitration provision described above.

Conflict of Terms. In the event of a conflict or inconsistency between the terms of this Limited Warranty and the End User License Agreement (“EULA”) in regards to dispute resolution, the terms of this Limited Warranty shall control and govern the rights and obligations of the parties and shall take precedence over the EULA.

Memo

Memo

LG Customer Information Center	Centro de Información al Cliente LG	Centre de Service à la Clientèle de LG
For inquiries or comments, visit **www.lg.com** or call:	Para consultas o comentarios, visite **www.lg.com** o llame por teléfono:	Pour des questions ou des commentaires, visitez **www.lg.com/ca_fr** ou appelez :
1-800-243-0000 U.S.A.	1-800-243-0000 EE.UU.	1-800-243-0000 ÉTATS-UNIS
1-888-542-2623 CANADA	1-888-542-2623 CANADÁ	1-888-542-2623 CANADA
Register your product Online!	¡Registre su producto en línea!	Enregistrez votre produit en ligne!
www.lg.com	www.lg.com	www.lg.com/ca_fr