LG

*MFL72063058240 4REV01*

OLED55CS4*
OLED65CS4*

www.lg.com

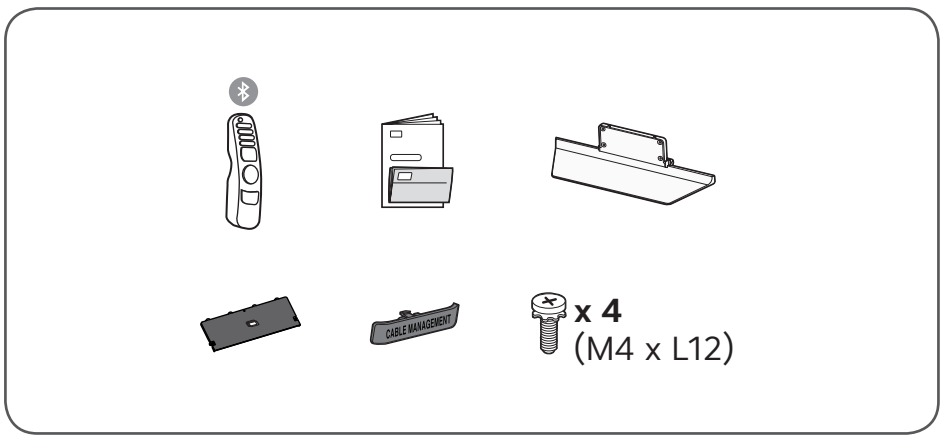


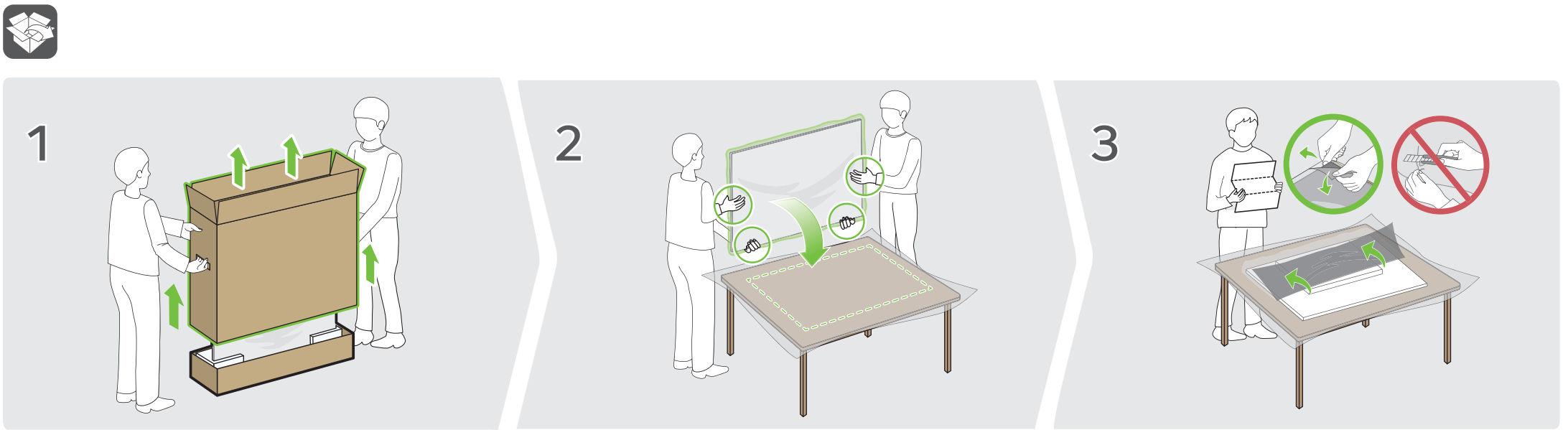


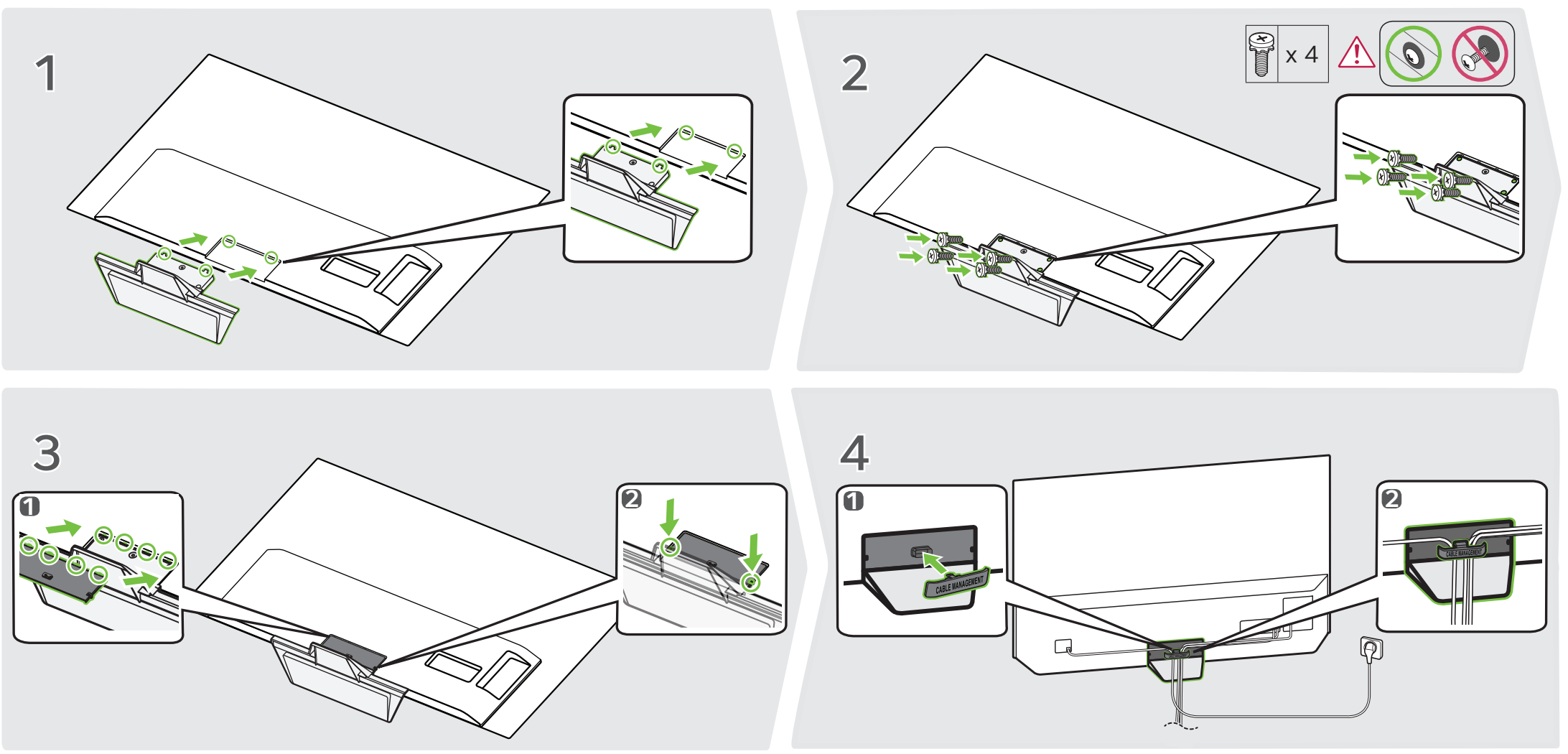


55/65”

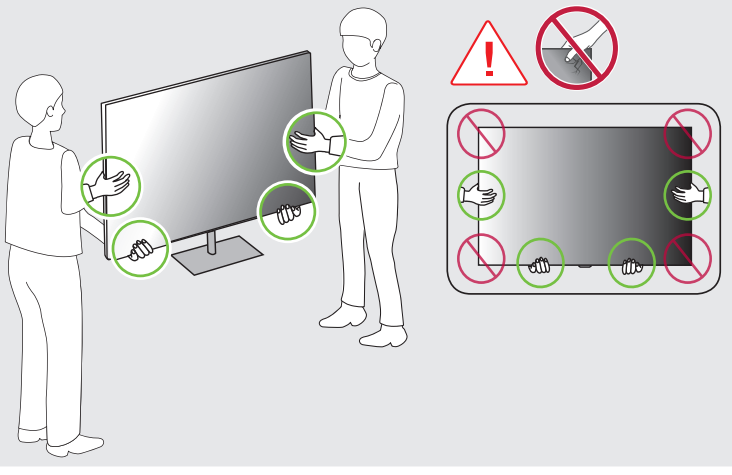

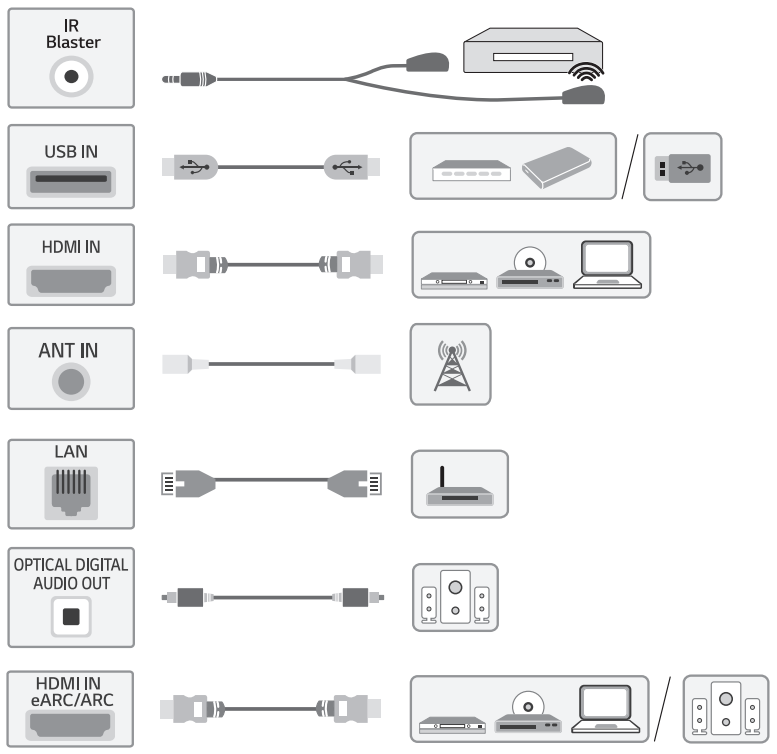

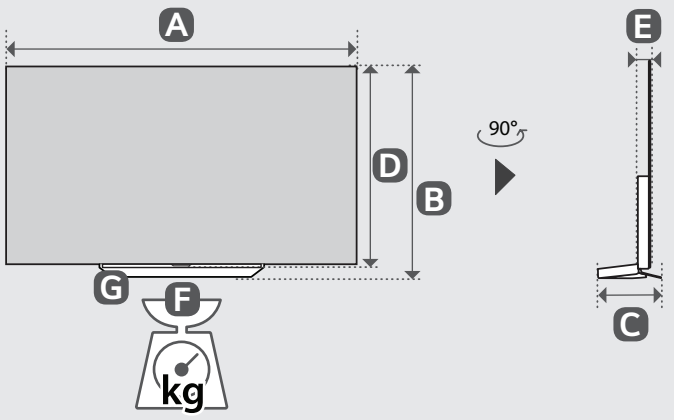


| | A | B | C | D | E | F | F - G |
|---|---|---|---|---|---|---|---|
| | (mm) | | | | | (kg) | |
| **OLED55CS4*** | 1228 | 744 | 246 | 708 | 46.9 | 19.9 | 18.9 |
| **OLED65CS4*** | 1449 | 869 | 246 | 832 | 46.9 | 25.0 | 24.0 |

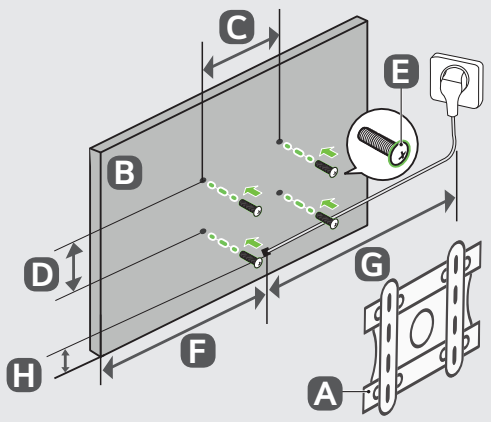


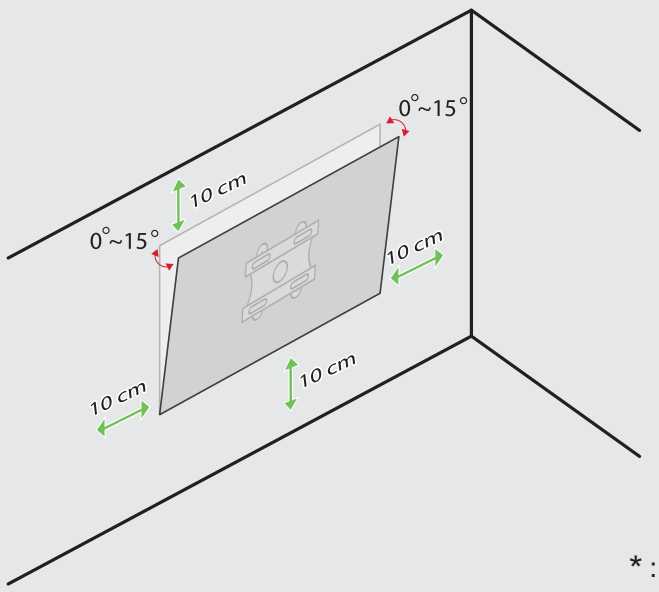


| A | B | C x D (mm) | E | F (mm) | G (m) | H (mm) |
|---|---|---|---|---|---|---|
| OLW480B | **OLED55CS4*** | 300 x 200 | M6 | 154 | ≧1.5 | 127 |
| | **OLED65CS4*** | | | 264 | | 129 |

* : 0~9, A~Z