Scan the QR code to see the manual.

OWNER'S MANUAL

MICROWAVE OVEN

Before beginning installation, read these instructions carefully. This will simplify installation and ensure that the product is installed correctly and safely. Leave these instructions near the product after installation for future reference.

ENGLISH

MJ2887BFUM MJ2887BWUM MJ2887BHTM MJ2887BIUM

MFL72066501
Rev.05_042425

www.lg.com

Copyright © 2023-2025 LG Electronics. All Rights Reserved

TABLE OF CONTENTS

This manual may contain images or content that may be different from the model you purchased.

This manual is subject to revision by the manufacturer.

IMPORTANT SAFETY INSTRUCTIONS

READ CAREFULLY AND KEEP FOR FUTURE REFERENCE 3
WARNING 3
CAUTION 8
CARING FOR THE ENVIRONMENT 12

INSTALLATION

Product Overview 15
Installation Requirements 17

OPERATION

Control Panel 19
Before Use 20
Quick Start 20
Cooking Mode 23
Recipe 26
Utensils Guide 285
Cooking Guide 286

TROUBLESHOOTING

FAQs 288
Before Calling for Service 288

APPENDIX

Warranty 290

IMPORTANT SAFETY INSTRUCTIONS

READ CAREFULLY AND KEEP FOR FUTURE REFERENCE

The following safety guidelines are intended to prevent unforeseen risks or damage from unsafe or incorrect operation of the appliance. The guidelines are separated into '**WARNING**' and '**CAUTION**' as described below.

Safety Messages

⚠	This symbol is displayed to indicate matters and operations that can cause risk. Read the part with this symbol carefully and follow the instructions in order to avoid risk.
⚠	**WARNING** This indicates that the failure to follow the instructions can cause serious injury or death.
⚠	**CAUTION** This indicates that the failure to follow the instructions can cause the minor injury or damage to the appliance.
♨	This symbol is displayed to alert that hot surface. Do not touch surfaces during use in order to prevent burn hazard.

WARNING

⚠ WARNING

- To reduce the risk of explosion, fire, death, electric shock, injury or scalding to persons when using this product, follow basic precautions, including the following:

Technical Safety

- This appliance can be used by children aged from 8 years and above and persons with reduced physical, sensory or mental capabilities or lack of experience and knowledge if they have been given supervision

or instruction concerning use of the appliance in a safe way and understand the hazards involved. Children shall not play with the appliance. Cleaning and user maintenance shall not be made by children without supervision.

- This appliance is not intended for use by persons (including children) with reduced physical, sensory or mental capabilities, or lack of experience and knowledge, unless they have been given supervision or instruction concerning use of the appliance by a person responsible for their safety. Children should be supervised to ensure that they do not play with the appliance.
- To reduce the risk of burns, electric shock, fire, injury to persons or exposure to excessive microwave energy when using the microwave oven, read all instructions before using the appliance.
- During use the appliance becomes hot. Care should be taken to avoid touching heating elements inside the oven. Children less than 8 years of age shall be kept away unless continuously supervised.
- Do not attempt to tamper with, or make any adjustments or repairs to the door , door seals, control panel, safety interlock switches or any other part of the oven which would involve the removal of any cover protecting against exposure to microwave energy.
- Only qualified service person from LG Electronics service centre should disassemble, repair, or modify the appliance.
- It is hazardous for anyone other than a competent person to carry out any service or repair operation that involves the removal of a cover which gives protection against exposure to microwave energy.
- Unlike other appliances, the microwave oven is a high-voltage and a high electrical-current piece of equipment. Improper use or repair could result in harmful exposure to excessive microwave energy or in electric shock.
- If the door or door seals are damaged, the oven must not be operated until it has been repaired by a competent person.
- Do not use your microwave oven to cook eggs in the shell. Pressure can build up inside the shell, causing it to burst.
- Liquids and other foods must not be heated in sealed containers since they are liable to explode. Remove the plastic wrapping from

food before cooking or defrosting. Note though that in some cases food should be covered with plastic film, for heating or cooking.

- Do not use harsh abrasive cleaners or sharp metal scrapers to clean the oven door glass since they can scratch the surface, which may result in shattering of the glass.
- The microwave oven must not be placed in a cabinet. The microwave oven is intended to be used free-standing.
- Keep the appliance and its cord out of reach of children less than 8 years.
- The appliance is not intended to be operated by means of an external timer or separate remote-control system.
- This appliance should not be used for commercial catering purposes. This appliance is intended to be used in household and similar applications such as:
  - Staff kitchen areas in shops, offices and other working environments;
  - Farm house;
  - By clients in hotels, motels and other residential environments;
  - Bed and breakfast type environments.
- Do not install this appliance inside mobile vehicles (camping cars).
- When heating food in plastic or paper containers, keep an eye on the oven due to the possibility of ignition.
- The contents of feeding bottles and baby food jars shall be stirred or shaken and the temperature checked before consumption, in order to avoid burns.
- Only use utensils that are suitable for use in microwave ovens. They may heat-up and char.
  - Remove metal twist ties before using the appliance.
  - Do not use wooden containers and ceramic containers that have metallic (e.g. gold or silver) inlays.
  - Metallic containers for food and beverages are not allowed during microwave cooking. Metal objects in particular may arc in the oven, which can cause serious damage.

- The microwave oven is intended for heating food and beverages. Drying of food or clothing and heating of warming pads, slippers, sponges, damp cloth and similar may lead to risk of injury, ignition or fire.
- If smoke is observed (or emitted), switch off or unplug the appliance and keep the door closed in order to stifle any flame.
- Only use the temperature probe recommended for this oven.
  - You can not ascertain that the temperature is accurate with an unsuitable temperature probe.
  - This model does not provide a temperature probe.
- When heating liquids, e.g. soups, sauces and beverages in your microwave oven,
  - Avoid using straight sided containers with narrow necks.
  - Do not overheat.
  - Stir the liquid before placing the container in the oven and again halfway through the heating time.
  - Be careful when handling the container.

    Microwave heating of beverages can result in delayed eruptive boiling, therefore care must be taken when handing the container.
  - After heating, let it stand in the appliance for a short time; stir or shake it again carefully and check the temperature of it before consuming to avoid burns (especially, contents of feeding bottles and baby food jars).
- The oven should be cleaned regularly and any food deposits removed. Failure to maintain the oven in a clean condition could lead to deterioration of the surface that could adversely affect the life of the appliance and possibly result in a hazardous situation.
- Cleaning and user maintenance shall not be made by children unless they are aged from 8 years and above and supervised.
- The appliance shall not be cleaned with a steam cleaner.
- Steam cleaner is not to be used.
- During use the appliance becomes hot. Care should be taken to avoid touching heating elements inside the oven.

- Only allow children to use the oven without supervision when adequate instructions have been given so that the child is able to use the oven in a safe way and understands the hazards of improper use.

Installation

- Ensure that the outlet socket is properly grounded, and that the earth pin on the power cord is not damaged or removed from the power plug. For more details on grounding, inquire at an LG Electronics customer information centre.
- This appliance must be earthed. The wires in the mains lead are coloured in accordance with the following codes:
  - BLUE: Neutral
  - BROWN: Live
  - GREEN and YELLOW: Earth
- As the colours of the wires in the mains lead of this appliance may not correspond with the coloured markings identifying the terminals in your plug proceed as follows:
  - The wire which is coloured BLUE must be connected to the terminal which is marked with the letter N or coloured BLACK.
  - The wire which is coloured BROWN must be connected to the terminal which is marked with the letter L or Coloured RED.
  - The wire which is coloured GREEN & YELLOW or GREEN must be connected to the terminal which is marked with the letter G or earth symbol.

⏚ Earth symbol

- This appliance incorporates an earth connection for functional purposes.
- If the supply cord is damaged, it must be replaced by the manufacturer, its service agent of similarly qualified persons in order to avoid a hazard. Improper use may cause serious electric damage.
- The appliance is supplied from a cord extension set or an electrical portable outlet device, the cord extension set on electrical portable

outlet device must be positioned so that it is not subject to splashing or ingress of moisture.

- If the power cord is damaged or the hole of the outlet socket is loose, do not use the power cord and contact an authorized service centre.

Operation

- Children should not allow to play with accessories or hang down from the door or any part of the appliance.
- When the appliance is operated in the combination mode, children should only use the appliance under adult supervision due to the temperatures generated.
- Never operate the appliance when it is empty. Food or water should always be in the appliance during operation to absorb the microwave energy.
- Do not operate your appliance if it is damaged. It is particularly important that the oven door closes properly and that there is no damage to the: (1) door (bent), (2) hinges and latches (broken or loosened), (3) door seals and sealing surfaces. It could result in harmful exposure to excessive microwave energy.
- Do not use the appliance for the purpose of dehumidification. (ex. Operating the microwave oven with wet newspapers, clothes, toys, electric devices, pet or child etc.) It can be the cause of serious damage to safety such as a fire, a burn or a sudden death due to an electric shock.
- Be certain to use proper accessories on each operation mode. Improper use could result in damage to your appliance and accessories, or could make spark and a fire.

CAUTION

⚠ CAUTION

- To reduce the risk of injury to persons, malfunction, or damage to the product or property when using the appliance, follow basic safety precautions, including the following:

Installation

- Install the appliance according to the installation requirements that are in this manual.
- Allow at least 8 cm from the front of the oven door to avoid accidental tipping of the appliance.
- The turntable must always be in place when you operate the appliance.
- Do not block an exhaust outlet that is located on the top, bottom or side of the appliance.
- Do not place any object (such as kitchen towels, napkins, etc.) between the appliance front face and the door.
- In order to avoid a hazard due to inadvertent resetting of the thermal cut-out, this appliance must not be supplied through an external switching device, such as a timer, or connected to a circuit that is regularly switched on and off by the utility.

Operation

- Do not touch the appliance (including the oven door, outer cabinet, rear cabinet, oven cavity, accessories and dishes) during grill mode, convection mode and auto cook operations. The temperature of accessible surfaces may be high when the appliance is operating. There is the danger of a burn unless wearing thick culinary gloves.
- Do not place an object(a book, a box, water bottle, vase etc.) on the appliance. The appliance may overheat or catch fire or the object may fall, causing injury to persons.
- Do not operate the appliance with the door open. It could result in harmful exposure to excessive microwave energy.
- Set the cooking times correctly. The small amounts of food require shorter cooking or heating time. Over cooking may result in the food catching on fire and subsequent damage to your appliance.
- Do not use recycled paper products. They may contain impurities which may cause sparks or fires when used in cooking.
- Do not cook food wrapped in paper towels or newspaper, unless your cook book contains instructions for the food you are cooking.

- Do not use newspaper in place of paper towels for cooking.
- Do not use the appliance to dry newspapers or clothes. They may catch fire.
- Do not cook eggs in their shell. Eggs in their shell and whole hard-boiled eggs should not be heated in microwave ovens since they may explode, even after microwave heating has ended. Pressure will build up inside the egg which will burst.
- Do not attempt deep fat frying in your appliance. This could result in a sudden boil over of the hot liquid.
- Pierce the skin of potatoes, apples or any such fruit or vegetables before cooking. They could burst.
- If smoke is observed (or emitted), switch off or unplug the appliance and keep the door closed in order to stifle any flame.
- Follow exact directions given by each manufacturer for their popcorn product.
  - Never use a brown paper bag for popping corn.
  - Never attempt to pop leftover kernels.
  - Do not leave the appliance unattended while the corn is being popped.
  - If corn fails to pop after the suggested times, discontinue cooking.
  - Overcooking could result in the corn catching a fire.
- The power connection may be achieved by having the plug accessible or by incorporating a switch in the fixed wiring in accordance with the wiring rules. Using improper plug or switch can cause an electric shock or a fire.
- All air vents should be kept clear during cooking. If air vents are covered during appliance operation the appliance may overheat.

Maintenance

- If it is necessary to take precautions during user maintenance, appropriate details shall be given.
- Do not rinse containers, tray and rack by placing them in water immediately after cooking.

- Unplug the power plug and allow it to cool before cleaning.
- Always use gloves when removing food and accessories after cooking as the oven and accessories will be very hot.
- Allow the turntable to cool before removing it from the appliance.
- Do not allow food or cleaner residue to accumulate on sealing surfaces of the appliance.
- Keep the inside and outside of the appliance clean.

Cleaning

Keep the oven clean inside and outside. Take special care to keep the inner door panel and the front frame free of food or grease build-up. Clean your oven weekly or more often, if needed.

- Abrasive cleansers, steel wool pads, gritty wash cloths, some paper towels, etc., can damage the control panel and the interior and exterior of the oven.

Cleaning the Interior

Use a damp cloth to clean the surfaces of the door and wipe out crumbs between the door and the frame. Remove greasy spatters with a soapy cloth then rinse and dry.

- Wipe spatters immediately with a wet paper towel, especially after cooking chicken or bacon.
- If steam accumulates inside or outside of the oven door, wipe the panels with a soft cloth.

Cleaning the Exterior

Clean the outside of the oven with soap and water. Rinse with clean water and dry with a soft cloth or paper towel.

- Do not allow the water to seep into the ventilation openings to prevent damage to the operating parts inside the oven.
- The door and door seals should be kept clean. Use only warm, soapy water, rinse then dry thoroughly.
- Frequently wipe metal parts with a damp cloth.

Cleaning the Control Panel

Open the door to prevent the oven from accidentally starting. Wipe with a damp cloth followed immediately by a dry cloth. Press **STOP** or **STOP/Clear** after cleaning.

Cleaning the Accessories

Wash the glass tray and rotating ring in mild, sudsy water. For heavily soiled areas, use a mild cleanser and scouring sponge. Dry completely before use.

- The glass tray and rotating ring are dishwasher safe.

CARING FOR THE ENVIRONMENT

Disposal of Your Old Appliance (as per e-waste Rules)

1. When this crossed out wheeled bin symbol is depicted on the product and its operator's manual, it means the product is covered by E-Waste Management Rules India published by MoEF & CC, Govt. of India and are meant to be recycled, dismantled, refurbished or disposed off.

2. Do's

- a. The product is required to be handed over only to the authorized recycler for disposal.
- b. Keep the product in isolated area, after it becomes non-functional/ unrepairable so as to prevent its accidental breakage.

Don'ts

- a. The product should not be opened by the user himself/herself, but only by authorized service personnel.
- b. The product is not meant for re-sale to any unauthorized agencies/ scrap dealer/kabariwalah.
- c. The product is not meant for mixing into household waste stream.
- d. Do not keep any replaced spare part(s) from the product in exposed area.

3. Any disposal through unauthorized agencies/person will attract action under Environment (Protection) Act 1986.

4. This product is complied with the requirement of Hazardous Substances as specified under E-Waste Management Rules India published by MoEF & CC, Govt. of India.

5. To locate a nearest collection centre or call for pick-up (limited area only) for disposal of this appliance, please contact No. 08069379999, Toll Free No. 1800-315-9999 for details. All collection centre and pick up facilities are done by third parties with LG Electronics India Ltd. Merely as a facilitator. For more detailed information, please visit : http://www.lg.com/in.

अपने पुराने उपकरण का निपटान (ई- अपशिष्ट नियमों के अनुसार)

1. जब इस काटे गए पहिये वाले बिन का चिह्न किसी उपकरण और इसके ऑपरेटर और उसके ऑपरेटर की पुस्तिका के साथ संलग्न होता है, तो इसका मतलब है कि इसे "ई- अपशिष्ट" (प्रबंधन और हथालन) नियम के अंतर्गत सम्मलित किया गया है और इसके पुनर्नवीनीकरण, नवीनीकरण, विघटन और निपटान के लिए बनाया गया है।
   MoEF & CC भारत सरकार द्वारा प्रकाशित (भारतीय "ई- अपशिष्ट" (प्रबंधन और हथालन))

2. करें

   क. उपकरण को सिर्फ अधिकृत पुनः नवीनीकरणकर्ता को ही निपटारन करने हेतु हस्तांतरित करें।

   ख. जब उपकरण कार्यरत ना हो, इसे अलग क्षेत्र में रखें ताकि उपकरण से होने वाली दुर्घटनाओं से बचा जा सके।

   ना करें

   क. इस उपकरण को स्वयं उपयोगकर्ता द्वारा नहीं खोला जाना चाहिए, बल्कि केवल अधिकृत सेवा कर्मियों द्वारा ही खोला जाना चाहिए।

   ख. इस उपकरण को पुन: बिक्री के लिए किसी भी अनधिकृत संस्था /भंगार वाला /कबाड़ीवाला को ना दे।

   ग. इस उपकरण को किसी घरेलू अपशिष्ट सामान के साथ मिलाकर ना रखें।

   घ. उपकरण के बदले हुए या आंतरिक पुरजो को खुले क्षेत्र में न रखें।

3. यदि किसी अनधिकृत विभाग या व्यक्ति के द्वारा निपटारन किया जाता है तो यह पर्यावरण (सुरक्षा) अधिनियम १९८६ के अंतर्गत आता है।

4. यह उत्पाद ई- अपशिष्ट (प्रबंधन और हथालन) नियम के तहत निर्दिष्ट खतरनाक पदार्थो की आवश्यकता का पालन करता है।
   MoEF & CC, भारत सरकार द्वारा प्रकाशित (भारतीय "ई- अपशिष्ट" (प्रबंधन और हथालन))

5. उपरोक्त पदार्थो के निपटारन के लिए नजदीकी निपटारन संसथान (संकीर्ण क्षेत्र) में कॉल करे। अधिक जानकारी के लिए हमारे नंबर **08069379999**, टोल फ्री नंबर **1800-315-9999** पर पर कॉल करें।सभी संग्रहण केंद्र व पिक-अप की सुविधाएं किसी थर्ड -पार्टी जो "**LG Electronics India Ltd.**" को अपनी सेवाएं प्रदान कर रही हो से करवाए।
   अधिक जानकारी के लिए, कृपया देखें वेब साइट : **http://www.lg.com/in**

INSTALLATION

Product Overview

The appearance or components of the appliance may differ from model to model.

Front View

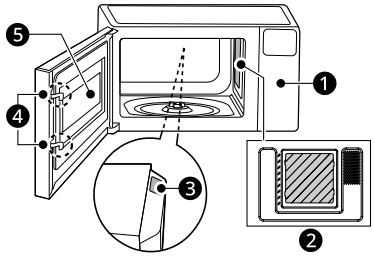

❶ Control Panel

❷ Mica Sheet

❸ Rating Label

❹ Safety Door Lock System

❺ Window

⚠ WARNING

- Do not operate the oven when it is empty or without the glass tray. It is best to leave a glass of water in the oven when not in use. The water will safely absorb all microwave energy, if the oven is accidentally started.

⚠ CAUTION

- To avoid risk of personal injury or property damage, do not use stoneware, metal cookware, or metal rimmed cookware in the oven.

NOTE

- Do not remove the mica sheet from the inside cavity of the oven. It is there to protect the microwave components from food spatters.

ENGLISH

Accessories

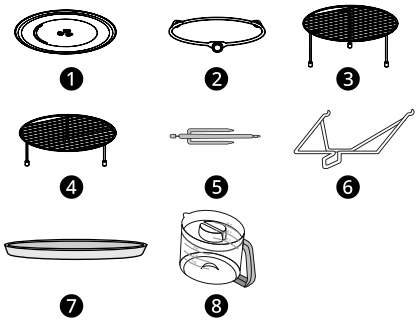

❶ Glass Tray

❷ Rotating Ring

❸ High Rack

❹ Low Rack

❺ Rotisserie Bar

❻ Rotisserie Bar Handle

❼ Multicook Tawa

❽ Milk Pasteurization Kit

Accessories Guied

	Microwave	Grill	Convection	Grill Combination	Convection Combination
Glass Tray	O	O	O	O	O
High Rack	-	O	O	O	O

	Microwave	Grill	Convection	Grill Combination	Convection Combination
Low Rack	-	O	O	O	O
Rotisserie Bar	-	O	O	O	O
Multicook Tawa	-	O	O	O	O
Multicook Tawa and Rack	-	O	O	O	O
Milk Pasteurization Kit	O (Pasteurize Milk function only)	-	-	-	-

- O: Acceptable
- -: Not Acceptable

⚠ CAUTION

- Do not use the microwave oven without the glass tray and rotating ring.
- Be certain to use proper accessories on each operation mode. Improper use could result in damage to your oven and accessories, or could make spark and a fire.

Specifications

Power supply and power consumption may vary depending on the model purchased. Refer to the labels for details.

MJ2887BFUM, MJ2887BWUM, MJ2887BHTM, MJ2887BIUM Model

- **Microwave Output**: Max. 900 W*1
- **Frequency**: 2450 MHz*2
- **Dimensions (W x H x D)**: 510 mm x 308 mm x 526 mm
- **Power Supply**: 230 V~ 50 Hz
  - **Power Consumption**: Microwave 1350 W, Grill 1200 W, Convection 1950 W, Grill Combination 1350 W, Convection Combination 1950 W

*1 IEC 60705 RATING STANDARD. Specifications are subject to change without prior notice.

*2 Microwave Frequency: 2450 MHz +/- 50 MHz (Group 2 / Class B)

Group 2 equipment: group 2 contains all ISM RF equipment in which radio-frequency energy in the frequency range 9 kHz to 400GHz is intentionally generated and used or only used, in the form of electromagnetic radiation, inductive and /or capacitive coupling, for the treatment of material or inspection/analysis purposes.

Class B equipment is equipment suitable for use in domestic dwellings and domestic dwellings directly connected to a low voltage power supply network which supplies buildings used for domestic purposes.

NOTE

- When operating at 100% and 80% power levels for prolonged periods, the output power will be reduced gradually to help prevent the unit from electrically overheating.

Installation Requirements

Installation Location

1 Place the microwave oven on a flat surface with more than 85 cm height.
- The front of the oven should be at least 8 cm from the edge of the surface to prevent tipping.

2 Allow at least 20 cm from the top, 20 cm from the sides, and 20 cm back of the oven for proper ventilation.
- Free airflow around the oven is important.
- An exhaust outlet is located on bottom or side of the oven. If you use the microwave oven in an enclosed space or cupboard, the air flow for cooling the product could be worse. It may result in lower performance and reduced service life.

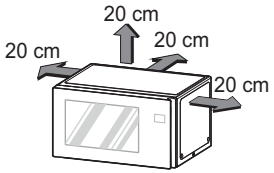

3 Place the rotating ring inside the oven and place the glass tray on top.

4 Insert the power plug into an outlet.
- Do not block the outlet to prevent damage the oven.
- Make sure the microwave oven is the only appliance connected to the socket.
- If your oven does not operate properly, unplug it from the electrical socket and then plug it back in.

NOTE

- Do not place oven above a gas or electric range.
- The setting of the cooking time should be shorter than common microwave ovens (700 W, 800 W) due to the relatively high output power of the product.

Radio Frequency Interference

- When operating the microwave oven, If you use a product such as radio, TV, wireless LAN, Bluetooth, medical equipment, wireless equipment etc.
- Using the same frequency as the microwave oven, the product may receive interference from these products. This interference does not indicate a problem of the microwave or the product and is not a malfunction. Therefore, it is safe to use. However, medical equipment may receive interference as well, so use caution when using medical equipment near the product.

Rotisserie Installation

Never operate the oven at combination mode with rotisserie bar (without food). Do not use the rotisserie bar in microwave oven mode.

1 Position and insert the food in the Rotisserie bar skewers (seekh), ensuring that the rotisserie bar runs centrally through the food. And tie the food with thread to the bar if necessary.

2 Insert the end of the rotisserie bar ❸ into the rotisserie jaw ❹ on the right hand of the oven wall. Push it to the right, rotating the rotisserie bar slightly until the rotisserie-bar fits into the rotisserie jaw ❹.

3 Support the other end of the rotisserie bar ❷ on the hollow of the rotisserie holder ❶.

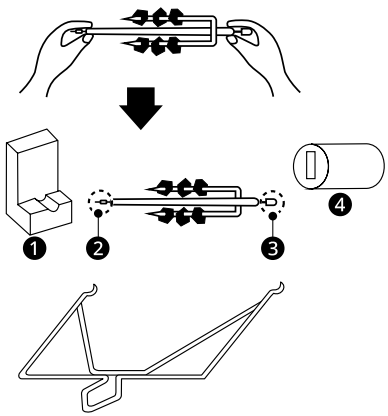

OPERATION

Control Panel

Control Panel Features

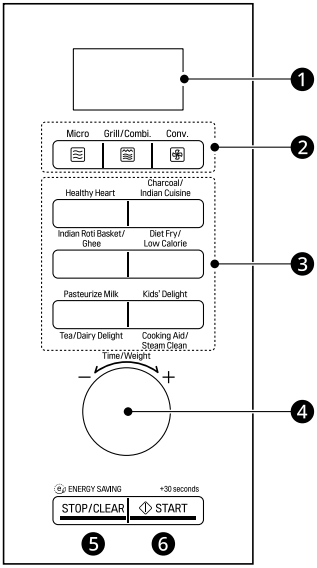

❶ **Display**

Shows the time of day, cooking time settings, and selected cooking functions.

❷ **Cook Mode**

Select a cooking mode for the microwave oven, grill, grill combination, convection, and convection combination mode.

❸ **Auto Cook Mode**

Press the buttons to select preprogrammed cook for popular food items.

❹ **More/Less**

Set cooking time, power level, quantity, or weight.

❺ **STOP/Clear**

Stop the oven or clear all entries.

Energy Saving

Allows to save energy.

❻ **START**

Press this button to start the oven, enter amounts, or cook at 100% cook power for 30 seconds.

- If you press this button during cooking to increase cook time by 30 seconds. (Up to 99 minutes and 59 seconds)

Display Icon

An icon displays when a function is selected or an weight / a power level / a temperature is selected by using **More/Less**.

Icon	Indication
≋	Microwave
∿∿	Grill
✣	Convection
≋∿∿	Grill Combination
≋✣	Convection Combination
**	Defrost
↻	Knob Rotation
⚖	Select an Weight
10·1	Select Time
◇	Start Cooking
kg	Select an Weight
°C	Select a Convection Temperature

NOTE

- A beep sounds each time you press a key. A melody signals the end of a timer or a cooking cycle.

ENGLISH

NOTE

- This oven has a built-in safety interlocks to prevent exposure to excessive microwave energy. The oven will automatically turn off any cooking when the door is opened.

Before Use

Microwave Power Levels

This microwave oven is equipped with 5 power levels to give you maximum flexibility and control over cooking. See the table for suggested power levels for various foods.

- When operating at 100% and 80% power levels for prolonged periods, the output power will be reduced gradually to help prevent the unit from electrically overheating.

Power Level	Use
High 900 W (100%)	• Boiling water. • Browning ground beef. • Cooking poultry pieces, fish, vegetables, and tender cuts of meat.
720 W (80%)	• All reheating. • Roasting meat and poultry. • Cooking mushrooms and shellfish. • Cooking foods containing cheese and eggs.
540 W (60%)	• Baking cakes and scones. • Preparing eggs. • Cooking custard. • Preparing rice, soup.
360 W (40%)	• All thawing. • Melting butter and chocolate. • Cooking less tender cuts of meat.
180 W (20%)	• Softening butter and cream cheese. • Softening ice cream. • Raising yeast dough.

Child Lock

Use this safety feature to lock the control panel and prevent the oven from being turned on when cleaning the oven or prevent children from unsupervised use of the oven.

Setting Child Lock to ON

1 Press **STOP/Clear**.

2 Press and hold **STOP/Clear** until a **L** appears in the display (approximately 3 seconds).

Cancelling Child Lock
Press **STOP/Clear** and hold until a **L** disappears in the display (approximately 3 seconds).

NOTE

- If set, the time of day reappears in the display after 1 second.
- If the oven is locked, a **L** appears in the display when any key is pressed.
- Unlock the oven to resume normal use.

Quick Start

Quick Start Feature

This feature allows you to set 30-second intervals of High power cooking with each press of the **START** button.

Cooking for 2 Minutes on High Power

1 Press **STOP/Clear**.

2 Press **START** four times.

- The oven starts cooking and the time counts down in the display.

NOTE

- The oven will immediately start cooking for 30 seconds on high power.
- Press **START** repeatedly to extend the cook time by 30 seconds every time the button is pressed.
- The cook time can be extended to 99 minutes and 59 seconds.

Manual Cooking

When not using the auto cooking functions, the cooking time and power level are set manually.

1 Press **STOP/Clear**.

2 Press **Micro** until a desired power level appears in the display.

3 Select a desired time by using **More/Less**, and press **START**.

- When cooking is complete, a chime sounds and **End** appears in the display window. **End** remains in the display and the chime repeats every minute until the door is opened, or any button is pressed.

NOTE

- If a power level is not selected, the oven defaults to High power.

Grill Cooking

This feature allow you to brown and crisp food quickly without preheating.

1 Press **STOP/Clear**.

2 Press **Grill/Combi**.

3 Select a desired time by using **More/Less**, and press **START**.

⚠ CAUTION

- Always use gloves when removing food and accessories after cooking as the oven and accessories will be very hot.

NOTE

- The rack can be used in grill and grill combination cooking. Place the rack on the glass tray.

Grill Combination Cooking

This feature allow you to combine microwave cooking with the grill to cook quickly.

1 Press **STOP/Clear**.

2 Press **Grill/Combi.** three time.

3 Press **Micro** until a desired power level appears in the display.

- Microwave power level code: 180 W, 270 W, 360 W

4 Select a desired time by using **More/Less**, and press **START**.

- During cooking you can adjust the cooking time by using **More/Less**.

⚠ CAUTION

- Always use gloves when removing food and accessories after cooking as the oven and accessories will be very hot.
- The rack can be used in grill and grill combination cooking. Place the rack on the glass tray.

Convection Cooking

This feature allow you to cook food with hot blast heating.

To preheat the oven

1 Press **STOP/Clear**.

2 Press **Conv.**.

3 Select a desired temperature by using **More/Less**, and press **START** to temperature confirmation.

4 Press **START**.
- Preheating will be started with displaying **Pr-H** .
- The oven will beep when the desired temperature is reached. It will take a few minutes to reach the selected temperature.
- Once it has reached correct temperature, place food in your oven and to start cooking.

To cook food using the convection mode

1 Press **STOP/Clear**.

2 Press **Conv.**.

3 Select a desired temperature by using **More/Less**, and press **START** to temperature confirmation.
- If you do not set a temperature your oven will automatically select **180 ℃**.

4 Select a desired time by using **More/Less**, and press **START**.
- During cooking you can turn the dial to adjust the cooking time.

⚠ CAUTION

- Always use gloves when removing food and accessories after cooking as the oven and accessories will be very hot.
- The low rack can be used in convection, and convection combination cooking. Place the low rack on the glass tray.

NOTE

- The convection oven has a temperature range of 40 - 230 ℃.
- The oven has a ferment function at the oven temperature of 40 ℃. You may wait until the oven is cool because you cannot use a ferment function if the oven temperature is over 40 ℃.

Convection Combination Cooking

This feature allow you to combine microwave cooking with the hot blast heating to cook quickly.

1 Press **STOP/Clear**.

2 Press **Grill/Combi.** two time.

3 Press **Conv.**.

4 Select a desired temperature by using **More/Less**.

5 Press **Micro** until a desired power level appears in the display.
- Microwave power level code: 180 W, 270 W, 360 W

6 Select a desired time by using **More/Less**, and press **START**.
- During cooking you can turn the dial to adjust the cooking time.

⚠ CAUTION

- Always use gloves when removing food and accessories after cooking as the oven and accessories will be very hot.
- Be careful when removing food as the container will be hot.
- The low rack can be used in convection, and convection combination cooking. Place the low rack on the glass tray.

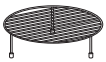

Energy Saving

The microwave oven allows you to save energy by display off when not cooking in oven.

- When door open condition (Lamp/LED on and display on)

1 Press **STOP/Clear**.

2 Lamp/LED off and display off.

3 Press any button on control panel, display shows **STOP/Clear**.

- When door close condition (Lamp/LED off and display on)

1 Press **STOP/Clear**.

2 Lamp/LED off and display off.

3 Press any button on control panel, display shows **STOP/Clear** related display and Lamp/LED is turned off.

- When door is open (Lamp/LED and display on)

  Door is open for 5 minutes, Lamp/LED and display are auto cut off.
  - When any button is pressed, Lamp/LED and display are turned on.
  - If door is closed, after 5 minutes display is turned off.

Cooking Mode

This feature has preprogrammed settings to automatically cook certain foods.

Healthy Heart Mode

1 Press **STOP/Clear**.

2 Press **Healthy Heart**.

3 Select a desired menu code by using **More/Less**, and press **START**.
- HH: **Healthy Heart**

4 Select a desired weight by using **More/Less**, and press **START**.
- During cooking you can turn the dial to adjust the cooking time.

NOTE

- Disclaimer: * Heart Friendly recipes are neither a substitute for, nor do they replace professional medical advice.

Charcoal/Indian Cuisine Mode

1 Press **STOP/Clear**.

2 Press **Charcoal/Indian Cuisinel**.

3 Select a desired menu code by using **More/Less**, and press **START**.
- CH: **Charcoal**
- IC: **Indian Cuisine**
- SC: **Sweet Corner**
- rd: **Rice Delight**
- CC: **Chatpat Corner**

4 Select a desired weight by using **More/Less**, and press **START**.
- During cooking you can turn the dial to adjust the cooking time.

Indian Roti Basket/Ghee Mode

1 Press **STOP/Clear**.

2 Press **Indian Roti Basket**.

3 Select a desired menu code by using **More/Less**, and press **START**.
- br: **Indian Roti Basket**
- Gh: **Ghee**

4 Select a desired weight by using **More/Less**, and press **START**.
- During cooking you can turn the dial to adjust the cooking time.

Diet Fry/Low Calorie Mode

1 Press **STOP/Clear**.

2 Press **Diet Fry/Low Calorie**.

3 Select a desired menu code by using **More/Less**, and press **START**.
- dF: **Diet Fry**
- HP: **Health Plus**
- So: **Soup**
- Co: **Continental**

4 Select a desired weight by using **More/Less**, and press **START**.
- During cooking you can turn the dial to adjust the cooking time.

Pasteurize Milk/Tea/Dairy Delight Mode

1 Press **STOP/Clear**.

2 Press **Pasteurize Milk/Tea/Dairy Delight**.

3 Select a desired menu code by using **More/Less**, and press **START**.
- PS: **Pasteurize Milk**
- dd: **Tea**
- PA, CU: **Dairy Delight**

4 Select a desired weight by using **More/Less**, and press **START**.
- During cooking you can turn the dial to adjust the cooking time.

Kids' Delight/Cooking Aid/ Steam Clean Mode

1 Press **STOP/Clear**.

2 Press **Kids' Delight/Cooking Aid/Steam Clean**.

3 Select a desired menu code by using **More/ Less**, and press **START**.
- CF: **Child's Favourite**
- bA: **Bakery**
- UC: **Cooking Aid**
- SL: **Steam Clean**

4 Select a desired weight by using **More/Less**, and press **START**.
- During cooking you can turn the dial to adjust the cooking time.

Recipe

Healthy Heart

Mantras for Heart Friendly Recipes by Heart Care Foundation of India

1. Dry fruits such as almonds, cashew nuts have zero cholesterol. Foods of plant in origin have zero cholesterol.
2. Artificial ghee is Vanaspati ghee, which is made by hydrogenation of oil and is bad for the heart. It increases levels of the “bad” LDL cholesterol and reduces levels of the “good” HDL cholesterol.
3. Limit the intake of trans fats in diet.
4. Clarified butter (desi ghee) increases the LDL “bad” cholesterol but does not reduce the HDL “good” cholesterol and is better than trans fats.
5. White meat and sea foods are better than red meat.
6. Whole wheat is better than simple wheat; simple wheat is better than broken wheat and broken wheat is better than refined flour (maida).
7. Eat seasonal and locally grown vegetables and fruits.
8. Include all seven colors and six tastes in diet.
9. Eat a variety of fruits and vegetables, in moderation.
10. Do not consume more than 5 g of common salt (sodium chloride) in a day.
11. Soak pulses (dal) overnight or slow boil them to reduce bloating in the abdomen and retain folic acid.
12. Potatoes/Carrot/Radish (vegetables grown underground): Soak them in water before use for few hours or slow boil them to reduce adverse effects like bloating.
13. Asafoetida (hing) is added to any recipe to reduce flatulence.
14. Brown rice is better than white rice.
15. Methi leaves are added to any sweet vegetable (such as potato). It has anti-insulin resistance action.
16. Wheat sensitive people should switch to millets such as pearl millet (bajra), sorghum (jowar) and finger millet (ragi). They are gluten-free.
17. Fruit-based flours such as buckwheat (kuttu), water chestnut (singhara), jungle rice/barnyard millet (samak chawal), amaranth (rajgira) are gluten-free.
18. Besan is gluten-free.
19. Thinner you cut the vegetables, more will be the surface area and more will be the oil absorbed. Boil vegetables separately and cook the masala separately.
20. All bitter and green vegetables (except sweet peas) reduce insulin resistance.
21. Drink low-fat milk or soya, almond or cashew nut milk.
22. Wheat and gluten sensitive people may also not tolerate oats, corn and dairy products.
23. Broccoli and zucchini have anti-cancer properties.
24. Patients with celiac disease cannot take wheat, barley, rye as they contain gluten.
25. Barley beer has gluten. Whiskey is often gluten-free.
26. Onion and garlic are heart and diabetes friendly. They reduce cholesterol levels in the blood.
27. Tofu (prepared from soya milk) lowers cholesterol and helps to restore hormonal imbalance in women.
28. Til or sesame seeds are high in calcium and can be added to any food.
29. Patients with wheat sensitivity should avoid corn flour.
30. Cinnamon (dalchini) and curry leaves (kadi patta) reduce insulin resistance.
31. Consume a variety of oils in your diet.
32. Coffee in moderation is good for health.
33. People who cannot tolerate milk can often tolerate curd.

34. One g of carbohydrate and protein produces 4 calories and 1g of fat generates 9 calories.
35. Jaggery is better than brown sugar and brown sugar is better than white sugar.
36. Stevia is a plant-based sweetner and can be consumed.
37. Take 30 mL of liquid per kg body weight per day.
38. One egg a day is not unhealthy.
39. Not more than 500 g of butter, oil and ghee in a month should be consumed per person.
40. Black tea and black coffee are better than tea or coffee with added milk or sugar.

HH I: Wheat Rava Idli

- **Weight Limit**: 4 pcs, 8 pcs (40-50 g each)
- **Utensil**: Microwave safe idli stand, Microwave safe bowl

Ingredients

List		Weight
For Wheat Rava Idli	Weight Limit	4 pcs, 8 pcs (40-50 g each)
	Wheat rava	100 g
	Urad	0.5 tbsp
	Chana dal	4 tbsps
	Water	As required
	Salt	As per taste
	Olive oil	2 tsps
	Curry leaves	A few sprigs
	Mustard seeds	0.5 tsp
	Red chilli powder	As per taste
	Curd	1.5 cups
	Fruit Salt (ENO)	1 tsp

Instructions

1) Wash and soak urad dal, chana dal, pepper and jeera.
2) Grind, mix and ferment for 8-10 hours. Grind the mixture to paste consistency (You can use the same batter for making 4-8 idlis). Now mix the rava and curd.
3) Grease the Microwave safe idli stand with little oil and put idli batter in it. Add 0.5 cup water in Microwave safe bowl. Keep the Idli stand in Microwave safe bowl and cover. Select and number, then press start.
4) After the beep, give standing time of 5 minutes and then remove.

HH2: Chana Dal Pancake

- **Weight Limit**: 1 pc
- **Utensil**: Multicook tawa, High rack

Ingredients

List		Weight
For Wheat Rava Idli	Weight Limit	1 pc
	Chana dal	100 g
	Fenugreek leaves, chopped	0.5 cup
	Spinach, chopped	0.5 cup
	Carrot, grated	0.5 cup
	Coconut, grated	1 tsp
	Coriander leaves, chopped	1 tsp
	Ginger, grated	1 tsp
	Chopped green chillies	0.5 tsp
	Olive oil	1 tbsp
	Salt	As per taste

Instructions

1) Grind soaked chana dal into a coarse paste adding a little water if required.
2) Add fenugreek leaves, spinach, carrot, curry leaves, ginger, green chillies and salt. Mix well.
3) Select menu and press start (preheat process).
4) Take a spoonful of batter and spread on the tawa and make a pancake of approximately. 130 mm diameter .
5) After beep, put tawa on high rack and press start.
6) When beeps, turn the pancake by greasing with oil.

HH3: Moong Dal Cheela

- **Weight Limit**: 1 pc
- **Utensil**: Multicook tawa, High rack

Ingredients

List		Weight
For Wheat Rava Idli	Weight Limit	1 pc
	Moong dal	200 g
	Crushed tofu mixed with chaat masala	1 tsp
	Capsicum (Green) and cabbage, chopped	1 tsp
	Onion, chopped	0.5 tsp
	Cashew nuts (chopped)	1 tsp
	Salt	As per taste
	Ghee	1 tsp

Instructions

1) Soak the moong dal overnight and grind it with some salt into a consistent flowing batter and press start.
2) Keep tawa on high rack and press start (preheat). After preheating is over, spread some batter in a circular motion over tawa and press start again.
3) After the beep, turn the cheela by greasing with ghee and press start.
4) Add cashew nuts and chopped vegetables and onions.
5) Serve with mint chutney.

HH4: Spinach And Tofu Toast

- **Weight Limit**: 2 pcs
- **Utensil**: High rack

Ingredients

List		Weight
For Spinach And Tofu Toast	Weight Limit	2 pcs
	Brown bread slices	4 nos
	To be mixed into a Spinach and Tofu Spread	
	Spinach chopped (blanched)	0.75 cup
	Tofu	0.25 cup
	Hung curd	2 tbsps
	Green chillies finely chopped	1.5 tsps
	Salt and black pepper	As per taste

Instructions

1) Mix spinach and tofu into paste by adding all the ingredients.
2) Now keep the bread slices on high rack and press start. After the beep, turn the slices and again press start.
3) Spread a portion of mixture on each bread slices and cut them diagonally.
4) Serve with coffee or tea.

HH5: Quinoa Veg Upma

- **Weight Limit**: 0.3 kg
- **Utensil**: Microwave safe glass bowl

Ingredients

List		Weight
For Quinoa Veg Upma	Weight Limit	0.3 kg
	Quinoa (soaked in water)	1 cup
	Olive oil	2 tsps
	Mustard seeds	1 tsp
	Asafoetida (hing)	a pinch
	Curry leaves	2-3 nos.
	Green chillies, finely chopped	2 tsps
	Onions, finely chopped	0.25 cup
	Carrots, grated	0.5 cup
	Salt	As per taste
	Red chilli powder	As per taste
	Coriander finely chopped	0.25 cup
	Water	4 cup

Instructions

1) In Microwave safe bowl, add oil, mustard seeds, asafoetida, curry leaves, green chillies, onion, carrots and press start.
2) After beep, add quinoa and salt, mix well and press start again.
3) When beeps, add water and coriander leaves and press start again.
4) After beep is over, mix well and cover and keep aside for 2-3 minutes.
5) Serve hot.

HHB: Rice and Moong Dal Idli

- **Weight Limit**: 4pcs, 8pcs (40-50 g each)
- **Utensil**: Microwave safe idli stand, Microwave safe bowl

Ingredients

List		Weight
For Rice And Moong Dal Idli	Weight Limit	4pcs, 8pcs (40-50 g each)
	Brown rice	1 cup
	Green moong dal (split)	0.5 cup
	Fenugreek (methi) seeds	0.25 tsp
	Carrot grated	0.5 cup
	Spring onions finely chopped	0.5 cup
	Salt	As per taste
	Fruit Salt (ENO)	1 tsp

Instructions

1) Soak the rice, moong dal and fenugreek seeds in a deep bowl with enough water for 5-6 hours.
2) Drain and blend in a mixer to a smooth paste using little water.
3) Transfer the mixture into a bowl; add the carrots, spring onion whites and greens and salt and mix well.
4) Just before steaming, add fruit salt to the batter and pour 2 tsps of water over it.
5) When the bubbles form, mix gently.
6) Put a little batter into each greased idli mould and select category and menu and press start. (You can use the same batter for making 4-8 idlis)
7) Serve with sambhar or chutney.

HH7: Buckwheat Porridge

- **Weight Limit**: 0.3 kg
- **Utensil**: Microwave safe glass bowl, Microwave safe flat glass dish

Ingredients

List		Weight
For Buckwheat Porridge	Weight Limit	0.3 kg
	Buckwheat (kuttu)	0.5 cup
	Almond milk	0.5 cup
	Maple syrup or honey	2 tsps
	Chopped green apple	0.5 cup

Instructions

1) Take 0.75 cup of water in a Microwave safe glass dish. Select category and menu. Press start.

2) When beeps, add buckwheat and salt. Mix well and press start.
3) When beeps, transfer the cooked buckwheat into a deep bowl. Add the almond milk and whisk well.
4) Add honey and mix well.
5) Top it evenly with the chopped apples. Press start again.

HH8: Methi Missi Roti

- **Weight Limit**: 2 pcs
- **Utensil**: Multicook tawa, Low rack

Ingredients

List		Weight
For Methi Missi Roti	Weight Limit	2 pcs
	g flour (besan)	1 cup
	Plain flour	0.25 cup
	Whole wheat flour	0.75 cup
	Finely chopped onions	0.5 cup
	Shredded fenugreek (methi) leaves	0.5 cup
	Finely chopped green chillies	1 tsp
	Carom seeds (ajwain)	0.5 tsp
	Salt	As per taste
	Oil for kneading	0.12 tsp
	Whole wheat flour	For dusting

Instructions

1) Combine all the ingredients together in a bowl and knead into a firm dough using enough warm water. Keep aside for 30 minutes under a wet muslin cloth.
2) Knead again using ghee till smooth and divide into two equal portions.
3) Roll out each portion into a thin circle of 12.5 cm (5") in diameter using a little flour for rolling.
4) Select category and press start (preheat). Keep tawa on low rack inside microwave.
5) When beeps, keep roti on tawa and press start again.
6) After beep, turn the roti, apply ghee and press start again.
7) Serve hot.

HH9: Grilled Veggie Zucchini

- **Weight Limit**: 0.3 kg

- **Utensil**: Microwave safe glass bowl, High rack

Ingredients

List		Weight
For Grilled Veggie Zucchini	Weight Limit	0.3 kg
	Zucchini, sliced	1 cup
	Carrots, raw, chopped	1 cup
	Mushrooms	1 cup
	Capsicum (yellow, red, green)	1 cup
	Olive oil	2 tbsps
	Pepper (black)	1 tbsp
	Italian herb seasoning mix	2 tsps
	Salt	1 tsp

Instructions

1) Cut all the vegetables in slices.
2) Put olive oil in a glass bowl and add all vegetables. Mix and press start.
3) After beep, mix it again and sprinkle salt and seasoning mix and press start again, transferring the vegetables on high rack and tawa.
4) Sprinkle more herbs as per your taste.

HH 10: Soya Bhurji

- **Weight Limit**: 0.3 kg
- **Utensil**: Microwave safe glass bowl

Ingredients

List		Weight
For Soya Bhurji	Weight Limit	0.3 kg
	Soya granules	0.75 cup
	Olive oil	2 tsps
	Cumin seeds (jeera)	1 tsp
	Finely chopped garlic (lehsun)	1 tsp
	Finely chopped green chillies	1 tsp
	Finely chopped ginger (adrak)	0.5 tsp
	Finely chopped onions	0.25 cup
	Finely chopped capsicum (green/yellow)	0.5 cup
	Chopped tomatoes	0.25 cup
	Turmeric powder (haldi)	0.5 tsp
	Chilli powder	0.25 tsp
	Garam masala	0.5 tsp
	Salt	As per taste
	Finely chopped coriander (dhania)	2 tbsps

Instructions

1) To soak the soya granules, combine the soya granules, salt and 1.5 cup of warm water together in a bowl and keep aside for 5-7 minutes.
2) Squeeze the soya granules thoroughly, retain them and discard the drained water. After soaking, the granules are approximately 1.5 cup.
3) In a Microwave safe bowl, add the cumin seeds, finely chopped garlic, green chillies and ginger and keep inside microwave oven. Select category, menu and weight, then press start.
4) When the microwave oven beeps, add finely chopped onions and capsicum. Then add tomatoes, turmeric powder, chilli powder, garam masala, salt and 0.25 cup of water and press start again.
5) When beeps, add the soaked soya granules, mix well and press start.
6) Serve hot.

HH I I: Brown Rice Risotto

- **Weight Limit**: 0.3 kg
- **Utensil**: Microwave safe glass bowl

Ingredients

List		Weight
For Brown Rice Risotto	Weight Limit	0.3 kg
	Brown rice	2 cups
	Water	4 cups
	Finely chopped onions	0.25 cup
	Finely chopped garlic (lehsun)	2 tsps
	Finely chopped Bell peppers (red, green and yellow)	0.5 cup
	Corn flour	2 tsps
	Low-fat milk	1 cup
	Salt	As per taste
	Dry red chilli flakes	1.5 tsp
	Dried oregano	2 tsps
	Grated mozzarella cheese	2 tsps

Instructions

1) Dissolve the corn flour in one tablespoon of warm milk and keep aside.
2) In a Microwave safe bowl, add onions and garlic, bell peppers. Select menu and press start.
3) When the microwave beeps, put brown rice in another Microwave safe bowl with water and press start again.
4) After beep is over, add milk, corn flour mixture, salt, oregano, chilli flakes and cheese and press start again.
5) Serve hot.

HH 12: Kadhai Tofu

- **Weight Limit**: 0.3 kg
- **Utensil**: Microwave safe glass bowl

Ingredients

List		Weight
For Kadhai Tofu	Weight Limit	0.3 kg
	Olive oil	2 tsps
	Ginger-garlic (adrak-lehsun) paste	2 tsps
	Finely chopped onions	0.5 cup
	Turmeric powder (haldi)	0.25 tsp
	Coriander-cumin (dhania-jeera) powder	1 tsp
	Chilli powder	1 tsp
	Garam masala	1 tsp
	Dried fenugreek leaves (kasuri methi)	1 tsp
	Fresh tomato puree	0.5 cup
	Sliced capsicum	0.25 cup
	Tofu, cut into thick strips	300 g
	Sugar	0.5 tsp
	Low-fat cream	2 tbsps
	Salt	As per taste
	Chopped coriander for garnishing	2 tbsps

Instructions

1) In a Microwave safe bowl, add oil, ginger-garlic paste and onions, turmeric powder, coriander-curmin seeds powder, chilli powder, garam masala and dried fenugreek leaves. Select menu and press start.
2) After the beep, add the tomato puree and 0.25 cup of water and press start again.
3) When the microwave beeps, add the capsicum, tofu, sugar, cream, salt and 0.25 cup of water. Mix lightly and press start again.
4) Garnish with coriander and serve hot.

HH I3: Dhansak Dal Veg

- **Weight Limit**: 0.3 kg
- **Utensil**: Microwave safe glass bowl

Ingredients

List		Weight
For Dhansak Dal Veg	Weight Limit	0.3 kg
	Toovar (arhar) dal, washed and drained	0.5 cup
	Split yellow g (peeli moong dal), washed and drained	2 tsps
	Split red lentil (masoor dal), washed and drained	2 tsps
	Split black lentils (urad dal), washed and drained	2 tsps
	Chopped brinjals (baingan)	0.25 cup
	Chopped bottle gourd (lauki)	0.25 cup
	Chopped red pumpkin (kaddu)	0.25 cup
	Finely chopped spring onions (whites and greens)	0.25 cup
	Chopped tomatoes	0.5 cup
	Salt	As per taste
	Tamarind pulp (imli)	2 tbsps
To be ground into a smooth paste (using 2 tbsps water)	Garlic (lehsun) cloves	4 pcs
	Whole kashmiri dry red chillies	3 pcs
	Coriander (dhania) seeds	1 tsp
	Cumin seeds (jeera)	0.5 tsp
	Green chilli	1 pc
	Pepper corns (kali mirch)	4 pcs
	Cloves (laung)	4 pcs
	Cardamom (elaichi)	1 pcs
	Chopped coriander (dhania)	1 tbsp

Instructions

1) Combine the toovar dal, yellow moong dal, masoor dal, urad dal, 2 cups of water, potatoes, brinjal, bottle gourd, red pumpkin, tomatoes, spring onions (whites and greens) and salt in a Microwave safe bowl and cover. Press start. After beeps, let it cool.

2) Blend in a mixer to smoothen the dal-vegetable mixture. Keep aside after cooling.

3) When the microwave beeps, add the prepared paste in another Microwave safe bowl and press start again.
4) Now add the dal-vegetable mixture, 0.5 cup water, mix well and add tamarind pulp. Press start again, stirring once in between.
5) Serve hot.

HH 14: Tomato Methi Rice

- **Weight Limit**: 0.3 kg
- **Utensil**: Microwave safe glass bowl

Ingredients

List		Weight
For Tomato Methi Rice	Weight Limit	0.3 kg
	Rice	300 g
	Water	500 mL
	Onion, thinly sliced	1 pc
	Ginger	1 inch
	Garlic cloves	4 pcs
	Tomato, finely chopped	3 pcs
	Fenugreek (Methi) leaves, roughly chopped	2 cups
	Red chilli powder	1 tsp
	Coriander (dhania) powder	2 tsps
	Garam masala powder	1 tsp
	Cinnamon (dalchini) stick	1 pc
	Cloves (laung)	2 pcs
	Cardamom (elaichi) pods/seeds	1 pc
	Ghee	2 tbsps
	Salt	As per taste

Instructions

1) In a Microwave safe bowl, add rice and water. Cover. Select category and menu. Press start.
2) When beeps, in another Microwave safe bowl, add ghee, onion, ginger, garlic, cinnamon sticks, cloves, cardamom, tomatoes, red chillies, coriander, garam masala powder, chopped methi and press start again.

3) When beeps, mix well, then add rice and cooked masala and again mix well. Press start again (add more water if dry).
4) Serve hot.

HH 15: Healthy Ragi Pizza

- **Weight Limit**: 0.2 kg
- **Utensil**: Multicook tawa, Low rack, High rack

Ingredients

List		Weight
For Healthy Ragi Pizza	Weight Limit	0.2 kg
	Cheese (mozzarella + processed) grated	6 tbsps
	Millet (ragi) flour	0.5 cup
	Refined flour (maida)	0.5 cup + for dusting
	Oil	For greasing
	Salt	0.5 tsp + to taste
	Fresh yeast	7 g
	Sugar	0.5 tsp
	Green capsicum	1 small pc
	Red capsicum	1 small pc
	Yellow capsicum	1 small pc
	Pizza sauce	2-3 tbsps
	Yellow zucchini sliced	0.5 small
	Green zucchini sliced	0.5 small
	Corn kernels	2 tbsps
	Black olive slices	As required

Instructions

1) Sift together refined flour, millet flour and 0.5 tsp salt into a bowl.
2) Take yeast in another bowl. Add some warm water and sugar, mix well and set aside till it activates.
3) Make a well in the flour mixture and pour the activated yeast in it. Mix and knead into a soft dough using water as required. Place in a bowl, cover with a damp muslin cloth and set aside in a warm place to prove.
4) Cut the capsicum into small pieces (juliennes).

5) Dust the worktop with some refined flour, place the proved dough on it and knock it back. Roll out into a medium thick square, dusting with flour.
6) Place the square on the greased tawa. Spread pizza sauce on it and top with 3 tbps mixed cheese, zucchini slices (reserve some), capsicum and corn kernels. Sprinkle some salt and top with remaining mixed cheese. Prepare a funny face using the reserved zucchini slices, capsicum juliennes and olive slices (eyes).
7) Now select category and weight and press start (preheat).
8) When the microwave beeps, keep the pizza on tawa and low rack and press start.
9) After the beep, keep the tawa on high rack and press start again.

HH 16: Saffron Potatoes

- **Weight Limit**: 0.3 kg
- **Utensil**: Multicook tawa, High rack

Ingredients

List		Weight
For Saffron Potatoes	Weight Limit	0.3 kg
	Potatoes (cut into wedges)	4 large pcs
	Olive oil	1 tbsp
	Saffron strands (crushed properly)	1 pinch
	Salt	As per taste
	Chilli flakes	1 tsp

Instructions

1) Cut the potatoes in wedges.
2) Add the salt, pepper, saffron, seasoning to coat the potatoes. Now keep tawa on low rack. Select category and press start.
3) After beep is over, turn the wedges and press start again.
4) Serve with ketchup.

HH 17: Broccoli Tikki

- **Weight Limit**: 0.3 kg
- **Utensil**: Microwave safe glass bowl

Ingredients

List		Weight
For Broccoli Tikki	Weight Limit	0.3 kg
	Broccoli	500 g
	Potatoes, washed with skin on	4 medium
	Oil	1 tbsp
	Cumin powder	2 tsps
	Coriander seeds	1 tsp
	Salt	1 tsp
	Green chillies, finely chopped	2 pcs
	Turmeric	0.5 tsp
	Chaat masala	1 tsp
	Spring onions	3 pcs
	Fresh coriander	Handful

Instructions

1) Add shredded broccoli and mashed potatoes. Sprinkle in salt, red chilli powder, chaat masala, cumin powder.
2) Now make tikkis out of it.
3) Keep the tikkis on high rack on tawa. Select category and press start.
4) When the microwave beeps, turn tikkis, oil brush them and press start again.
5) When beeps, turn again and press start.

HH 18: Flavored Soya Milk

- **Weight Limit**: 500 ml
- **Utensil**: Microwave safe glass bowl

Ingredients

List		Weight
For Flavored Soya Milk	Weight Limit	500 ml
	Soya beans	1 cup
	Water	3 cups
	Vanilla essence	1 drop

Instructions

1) Wash and soak the soya beans in water for at least 3 hours.
2) Drain out all the water.
3) Blend in a mixer with 3 cups of water to a fine puree.
4) Strain through a fine strainer to extract the milk.
5) Now add vanilla essence. Select category and press start.
6) Drink it hot.

HH 19: Carrot and Moong Dal Soup

- **Weight Limit**: 0.3 kg
- **Utensil**: Microwave safe glass bowl

Ingredients

List		Weight
For Carrot and Moong Dal Soup	Weight Limit	0.3 kg
	Chopped carrots	1 cup
	Split green g (hara moong dal) washed and drained	0.5 cup
	Olive oil	1 tsp
	Black peppercorns (kali mirch)	4-5 pcs
	Sliced onions	0.5 cup
	Finely chopped garlic (lehsun)	2 tsps
	Chopped tomatoes	0.25 cup
	Low-fat milk (99.7% fat-free)	0.75 cup
	Salt	As per taste
	Freshly ground black pepper	1 tsp

Instructions

1) Add the cumin seeds, onions, garlic paste and turmeric powder in a Microwave safe bowl and keep in MWO. Select category and press start.
2) Add the carrots, green moong dal, salt and 0.5 cup of water and mix well. Press start again. After the beep, grind the paste.
3) Add the coriander-cumin seeds powder and chilli powder and mix well. Add milk, cover and press start again.
4) Serve hot.

HH20: Gluten-free Pasta

- **Weight Limit**: 0.3 kg
- **Utensil**: Microwave safe glass bowl

Ingredients

List		Weight
For Gluten-free Pasta	Weight Limit	0.3 kg
	For the Sauce	4 large pcs
	Fresh tomato puree	0.5 cup
	Olive oil	2 tsps
	Finely chopped onions	1 cup
	Finely chopped garlic (lehsun)	1 tbsp
	Chilli powder	0.5 tsp
	Sugar	1 tsp
	Salt	As per taste
	Other Ingredients	1 tbsp
	Olive oil	1 tsp
	Finely chopped garlic lehsun	2 tsps
	Finely chopped capsicum (green, yellow, red)	0.25 cup
	Dry red chilli flakes (paprika)	0.25 tsp
	Gluten-free pasta (readily available)	3 cups
	Mushroom, zucchini	0.25 cup

Instructions

1) Take gluten-free pasta in a Microwave safe bowl, add oil and salt. Select category and press start.
2) After the beep, strain the pasta.
3) Now add onion, garlic, oil, capsicum, mushroom, zucchini and press start again.
4) When beeps, mix pasta, cooked vegetables and add tomato puree and press start.
5) Serve hot.

HH21: Garlic Celery Toast

- **Weight Limit**: 4 pcs
- **Utensil**: Multicook tawa, High rack

Ingredients

List		Weight
For Garlic Celery Toast	Weight Limit	4 pcs
	Whole wheat bread slices	4 pcs
For the Celery Garlic Spread	Chopped celery (ajmoda)	0.25 cup
	Rough chopped garlic (lehsun)	2 tsps
	Low-fat butter	1 tsp
	Salt	As per taste

Instructions

1) For the celery garlic spread, combine all the ingredients and blend in a mixer to a coarse paste without using water. Divide it into 4 equal portions and keep aside.
2) Place the bread slices on a clean, dry surface and apply 1 portion of celery garlic spread evenly on each bread slice.
3) Now select category and weight, then press start (preheat).
4) When beeps, keep the bread slices on tawa and high rack and press start again.
5) Have them with coffee or tea (low sugar).

HH22: Masoor Pulao

- **Weight Limit**: 0.3 kg
- **Utensil**: Microwave safe glass bowl

Ingredients

List		Weight
For Masoor Pulao	Weight Limit	0.3 kg

List		Weight
For the Rice	Brown rice, soaked for 15 minutes and drained	1 cup
	Onion, Tomato	0.5 cup
	Cumin, Coriander	1 tbsp
	Ginger-Garlic Paste	1 tsp
	Bay leaves (tej patta)	2 pcs
	Cinnamon stick	2 pcs
	Cloves (laung)	4 pcs
	Cardamoms	2 pcs
	Brown rice	0.5 cup
	Masoor dal	0.75 cup
	Water	3 cup
	Low-fat milk	0.5 cup
For the Garnish	Finely chopped coriander (dhania)	1 tsp

Instructions

1) In a Microwave safe bowl, add rice, masoor dal and water. Select category and press start.
2) When the microwave beeps, add onion, tomatoes, cumin seeds, coriander, cloves, cinnamon, cardamom, ginger-garlic paste in a Microwave safe bowl and press start again.
3) After the beep, add low-fat milk, rice-dal mixture and cooked paste in a bowl and mix well. Press start again (add water if required).
4) Serve with curd or raita.

HH23: Kale and Chickpea Curry

- **Weight Limit**: 0.3 kg
- **Utensil**: Microwave safe glass bowl

Ingredients

List		Weight
For Kale and Chickpea Curry	Weight Limit	0.3 kg
	Olive oil	1-2 tbsps
	Mustard seeds	0.5 tsp
	Onion, diced	1 large pc
	Garlic cloves, crushed	4 pcs
	Tomatoes, diced	4 plum
	Chickpeas (Kabuli chana) drained and rinsed	200 g
	Salt	As per taste
	Coriander seeds, crushed	1 heaped tsp
	Green chilli, chopped	1 pc
	Red chilli powder	1 tsp
	Turmeric	1 tsp
	Kale, chopped	200 g
	Green chilli, sliced for garnish	1 pc

Instructions

1) In a Microwave safe bowl, add chickpeas (soaked overnight). Select category and press start (You can use boiled chickpeas too).
2) After the microwave beeps, add oil, mustard seeds, cumin seeds, onion, garlic, tomatoes, kale, green chilli in another bowl and press start again (Add some water if required).
3) When the microwave beeps, mix the chickpeas and cooked mixture. Cover and press start again (Give standing time of 10 minutes).
4) Curry is ready to be served.

HH24: Stuffed Karela

- **Weight Limit**: 4 pcs
- **Utensil**: Microwave safe glass bowl, High rack, Multicook tawa

Ingredients

List		Weight
For Stuffed Karela	Weight Limit	4 pcs
	Bitter gourd (karela)	4 pcs
	Cumin seeds, crushed	1 tsp
	Onion, finely chopped	1 large pc
	Mustard oil	3 tbsp
	Cloves garlic, finely chopped	4 pcs
	Ginger, finely chopped	3 cm piece
	Salt	1 tsp
	Chillies, chopped	2 pcs
	Turmeric	1 tsp
	Amchoor	1 tsp
	Coriander seeds, crushed	1 tsp
	Fennel seeds, crushed	1 tsp
	Besan	1 tbsp

Instructions

1) Prepare the karela by washing and drying them; use a peeler to peel off the bumpy green skin and keep in a bowl.
2) Slice open the tummy of each karela without going all the way through and scrape out the insides including the seeds using a teaspoon into the same bowl. This will make the stuffing.
3) In a Microwave safe bowl add oil, cumin seeds, ginger, garlic and onions, amchoor, fennel, coriander, chilli, salt and turmeric. Select category and press start.
4) Once cooled, use a spoon or your hands and stuff the skins with equal amounts of the mixture. Hands are better as you will also cover the outside with the juices and oils from the stuffing as well.
5) Press the stuffing into the skins. You can use a little cotton thread to wrap around each to hold in the stuffing.
6) Now keep the stuffed the karelas on the greased multicook tawa and high rack and press start again.
7) When beeps, brush it with oil and turn the karelas and press start again.
8) After beep, remove the tawa and serve hot.

HH25: Gwarfali Ki Subzi

- **Weight Limit**: 0.2 kg
- **Utensil**: Microwave safe glass bowl

Ingredients

List		Weight
For Gwarfali Ki Subzi	Weight Limit	0.2 kg
	Cluster beans (gawarfali), cut into 2.5 cm (1" pieces)	2 cups
	Oil	2 tsps
	Cumin seeds (jeera)	0.5 tsp
	Chopped onions	0.5 cup
	Garlic (lehsun) paste	1 tsp
	Turmeric powder (haldi)	0.25 tsp
	Salt	As per taste
	Coriander-cumin seeds (dhaniajeera) powder	2 tsps
	Chilli powder	1 tsp

Instructions

1) Add the cumin seeds, onions, garlic paste and turmeric powder in a Microwave safe bowl and keep in MWO. Select category and weight and press start.
2) When the microwave beeps, add the cluster beans, salt and cup of water and mix well. Add the coriander-cumin powder and chilli powder and mix well. Cover and press start again.
3) When beeps, remove and mix. Cover and press start again.
4) Serve hot.

HH26: Flax Seed Uttapam

- **Weight Limit**: 1 pc
- **Utensil**: Multicook tawa, High rack

Ingredients

Ingredients		Weight
For Flax Seed Uttapam	Weight Limit	0.3 kg
	Semolina (sooji) flour	0.5 cup
	Flax seed flour	0.5 cup
	Bengal g flour (besan)	2 tbsps
	Lemon juice	1 tsp
	Baking powder	1 pinch
	Salt	As per taste
	Oil (for greasing and cooking)	0.25 tsp
To be mixed into a Topping	Chopped onions	0.25 cup
	Chopped tomatoes	0.25 cup
	Chopped capsicum	0.25 cup
	Finely chopped green chillies	1 tsp
	Finely chopped coriander (dhania)	2 tbsps
	Salt	As per taste

Instructions

1) Combine the semolina flour, flax seed flour, besan and 0.5 cup of water in a deep bowl. Mix well using a whisk. Cover it with a lid and keep aside for 15 minutes.
2) Add the lemon juice, baking soda, 5 tbsps of water and salt and mix well.
3) Pour a ladleful of the batter on the tawa, spread in a circular motion to make a 12.5 cm. (5") thick uttapam.
4) Now select category and press start (preheat).
5) After preheat is over, keep tawa on high rack with batter on it and press start.
6) After beep, turn the uttapam by greasing or brushing with little oil/ghee and press start again.
7) Now add the topping on the uttapam according to your taste.

HH27: Whole Wheat Vegetable Khichdi

- **Weight Limit**: 0.3 kg
- **Utensil**: Microwave safe glass bowl

Ingredients

List		Weight
For Whole Wheat Vegetable Khichdi	Weight Limit	0.3 kg
	Whole wheat, soaked for 6 hours (drained and ground into a paste)	0.5 cup
	Moong dal (soaked for 15-20 minutes and drained)	0.5 cup
	Oil	1 tsp
	Peppercorns (kali mirch)	2 pcs
	Cloves (laung)	2 pcs
	Cinnamon (dalchini) stick	1 inch
	Cumin seeds (jeera)	1 tsp
	Asafoetida (hing)	1 pinch
	Thinly sliced onions	0.25 cup
	Mixed vegetables (french beans, carrots and green peas)	1 cup
	Salt	As per taste
	Turmeric powder (haldi)	0.5 tsp
	Chilli powder	1.5 tsps
	Coriander and cumin	1.5 tsps
	Water	3.5 cups
For the Garnish	Finely chopped coriander	1 tbsp

Instructions

1) In a Microwave safe bowl, add oil, peppercorns, cloves, cumin seeds, cinnamon, asafoetida and onions. Select category and press start.
2) When the microwave beeps, add turmeric powder, coriander-cumin seeds, chilli powder, mixed vegetables and press start again.
3) When the microwave beeps, add ground wheat and moong dal paste followed by salt and adding water. Cover and press start again.

HH28: Brown Rice Daliya

- **Weight Limit**: 0.3 kg
- **Utensil**: Microwave safe glass bowl

Ingredients

List		Weight
For Brown Rice Daliya	Weight Limit	0.3 kg
	Brown basmati rice soaked for 15 minutes, then drained	0.5 cups
	Water	3 cups
	Pure ghee	1 tbsp
	Almond milk	2-3 cups
	Raw cashews	3-4 tbsps
	Stevia	3 drops
	Chopped raw nuts like cashews, pistachios	2-3 tbsps
	Currants or raisins	2-3 tbsps

Instructions

1) In a Microwave safe bowl, take brown rice and water. Select category and press start.
2) When beeps, add ghee andamp; almond milk in another Microwave safe bowl and press start again.
3) After the beep, add nuts, cashews, stevia, raisins. Cover and press start again. (More water or milk may be added if required).
4) Serve warm or chilled. Garnish with almond/pistachio slivers.

HH29: Roasted Garlic

- **Weight Limit**: 0.2 kg
- **Utensil**: Multicook tawa, High rack

Ingredients

List		Weight
For Roasted Garlic	Weight Limit	0.2 kg
	Raw garlic	200 g
	Olive oil	For brushing
	Salt and pepper	As per taste

Instructions

1) Cut the top off each head of garlic, exposing the cloves within.
2) Place the garlic heads on tawa and drizzle with olive oil. Sprinkle lightly with salt and pepper.
3) Pour in about 1.5 tbsp water for each head of garlic.

4) Keep the tawa on high rack and press start.
5) When beeps, remove the tawa.
6) It can be consumed directly or as side dish.

HH30: Roasted Flax Seeds

- **Weight Limit**: 0.2 kg
- **Utensil**: Multicook tawa, High rack

Ingredients

List		Weight
For Roasted Flax Seeds	Weight Limit	0.2 kg
	Flax seed	200 g
	Olive oil	For brushing

Instructions

1) Take flax seeds and spread over metal tray.
2) Apply oil brushing over the seeds.
3) Now select category and press start (preheat).
4) When beeps keep the tawa and rack inside microwave oven.
5) After the beep, remove the tawa and let them cool.
6) Roasted flax seeds can be consumed directly on can be crushed into powder.

Charcoal

CH 1: Paneer Tikka

- **Weight Limit**: 0.3 kg
- **Utensil**: Multicook Tawa, Low rack

Ingredients

List		Weight
For Paneer Tikka	Weight Limit	0.3 kg
	Paneer cubes (cut into 40 mm cubes), Capsicum (cut into cubes), onion (cut into cube), tomato(cut into cubes, pulp removed)	300 g

List		Weight
For Marinade	Hung Curd	2 tbsps
	Ginger garlic paste	1 tbsp
	Salt, Garam masala, Red Chilli powder	As per taste
	Tandoori masala	1 tsp
	Tandoori Color	A pinch
	Oil	1 tsp

Instructions

1) Mix all the ingredients of the marinade in a bowl.
2) Now add the paneer pieces, capsicum, onion, tomato and mix well. Keep in the refrigerator for 1 hour.
3) Now keep the tawa and rack inside the Microwave oven. Select category and press start. (Preheat process)
4) When beeps, keep paneer pieces on the tawa and pour some oil and press start.
5) After beep, turn over pieces, apply oil and again press start.

CH2: Murg Tandoori (For MJ2887BFUM, MJ2887BWUM, MJ2887BIUM model)

- **Weight Limit**: 1 kg
- **Utensil**: Rotisserie

Ingredients

List		Weight
For Murg Tandoori	Whole Chicken	1 kg
For Marinade	Hung Curd	1 Cup
	Garlic Paste	3 tbsps
	Ginger Paste	1 tbsp
	Salt	As per taste
	Tandoori Masala	3 tsps
	Cumin Powder	As per taste
	Tandoori Color	A pinch
	Red Chilli Powder	As per taste

Instructions

1) Mix all ingredients of marinade in a bowl.
2) Wash the chicken properly and make cuts on the chicken all over.

3) Marinade the chicken properly coating all the places. Keep marinated for 3-4 hours in refrigerator.
4) Keep paper towel (kitchen towel) on glass tray.
5) Assemble the rotisserie and insert the chicken tie up with thread.
6) Install the rotisserie in the microwave. Select category and press start. Serve with grilled onion slices, lemon wedges and pudina chutney.

CH2: Grilled Chicken Breast (For MJ2887BHTM model)

- **Weight Limit**: 1 kg
- **Utensil**: Low rack

Ingredients

List		Weight
For Grilled Chicken Breast	Chicken Breast	1 kg
For Marinade	Hung Curd	1 Cup
	Garlic Paste	3 tbsps
	Ginger Paste	1 tbsp
	Salt	As per taste
	Tandoori Masala	3 tsps
	Cumin Powder	As per taste
	Tandoori Color	A pinch
	Red Chilli Powder	As per taste

Instructions

1) Mix all ingredients of marinade in a bowl.
2) Wash the chicken breast properly and make cuts on it all over.
3) Marinade the chicken breast properly, by coating all the places. Keep marinated for 3-4 hours in refrigerator.
4) Take out chicken breast from refrigerator and place on low rack. Select category and press start.
5) When beeps, turn over the chicken breast and press start.
6) Serve with grilled onion slices, lemon wedges and pudina chutney.

CH3: Chana Kababs

- **Weight Limit**: 0.2 ~ 0.5 kg
- **Utensil**: Multicook tawa, High rack

Ingredients

List		Weight-1	Weight-2	Weight-3	Weight-4
For Chana Kababs	Weight Limit	0.2 kg	0.3 kg	0.4 kg	0.5 kg
	Boiled Kabuli Chana (Chhole)	200 g	300 g	400 g	500 g
	Cloves	1 no.	2 nos.	2 nos.	2 nos.
	Pepper powder	As per taste			
	Cinnamon powder	0.25 tsp	0.25 tsp	0.5 tsp	0.5 tsp
	Garlic Cloves	2 nos.	3 nos.	3 nos.	3 nos.
	Salt	As per taste			
	Ginger Chopped	1 tsp	2 tsps	3 tsps	3 tsps
	Bread pieces	1 no.	2 nos.	2 nos.	2 nos.
	Whole red chilly	1 no	2 nos.	3 nos.	3 nos.
	Bread crumbs	For coating			

Instructions

1) Grind boiled kabuli chana, cloves, pepper powder, cinnamon powders, garlic cloves, salt, ginger, soaked bread pieces, whole red chilli, to a paste.
2) Now shape the paste in the form of kababs and roll out each kababs in bread crumbs for complete coating.
3) Keep tawa and high rack inside Microwave. Press start. (Preheat Process)
4) When beeps, keep kababs on tawa and press start.
5) When beeps, turn over the side and press start.

CH4: Bharwan Baigan

- **Weight Limit**: 0.2 ~ 0.4 kg
- **Utensil**: Microwave safe glass bowl, Multicook tawa, High rack

Ingredients

List		Weight-1	Weight-2	Weight-3
For Bharwan Baigan	Weight Limit	0.2 kg	0.3 kg	0.4 kg
	Caulifower florets	200 g	300 g	400 g

List		Weight-1	Weight-2	Weight-3
For Stuffing	Tomato(grated)	1 no.	1.5 no.	2 nos.
	Onion (chopped)	0.25 cup	0.5 cup	1 cup
	Salt, Coriander powder, haldi, amchoor, garam masala, red chilli powder	As per taste		
	Oil	1 tbsp	1.5 tbsps	2 tbsps

Instructions

1) Pre-prepare the stuffing - In a Microwave safe glass bowl add oil, onions, tomatoes and all spices and microwave at 100% for 3 minutes. Keep aside slit the baigans cross ways with stems intact.
2) In a Microwave safe glass bowl add slit baigans and sprinkle some water and cover. Select category and weight, then press start.
3) When beeps, Remove the bowl from microwave oven and add the stuffing to the baigans.
4) Keep the baigans on tawa drizzle some drops of oil and keep tawa on high rack.
5) Press start.
6) When beeps, turn over again.
7) Press start.

CH5: Fish Tandoori

- **Weight Limit**: 0.5 kg
- **Utensil**: Multicook tawa, High rack

Ingredients

List		Weight
For Fish Tandoori	Weight Limit	0.5 kg
	Pomfret	3 small sized

List		Weight
For Marinade	Degi Mirch	2.5 tsps
	Jeera	0.5 tsp
	Ginger paste	1 tsp
	Garlic paste	1 tsp
	Tandoori Masala	0.5 tsp
	Garam Masala	1.5 tsps
	Amchoor	1 tsp
	Dhania Powder	1 tsp
	Lemon juice	2 tbsps
	Chaat Masala	0.25 tsp
	Salt	As per taste

Instructions

1) Rub the fish well with besan (3 tbsps), 2 tbsps lemon juice to remove fishy odour. Keep aside for 15 minutes. Wash well and pat dry. Prick the fish all over with a fork or give shallow cuts with a knife.
2) Mix all ingredients given under marinade. Rub the marinade well all over the fish pieces and let it marinade for 2-3 hours.
3) Keep the marinated fish pieces on tawa and tawa on high rack. Select the category and press start.
4) When beeps, turn over the fish and press start.
5) When beeps, turn over again and press start. Sprinkle chaat masala and serve with Pudina chutney and onion rings.

CH6: Shaami Kababs

- **Weight Limit**: 0.3 kg
- **Utensil**: Microwave safe glass bowl, Multicook tawa, High rack

Ingredients

List		Weight
For Veg kababs	Weight Limit	0.3 kg
	Minced Mutton	300 g
	Soaked Bengal gram	50 g
	Chopped onion	2 nos.
	Chopped coriander	A few sprigs
	Roasted cumin seeds	As per taste
	Salt , Red chilli powder, chat masala, coriander powder	As per taste

Instructions

1) In a microwave safe glass bowl add minced mutton. Select menu and press start.
2) Grind the cooked mutton, soaked Bengal gram, cumin seeds, coriander powder, salt and chilli powder, chat masala, chopped coriander and onion. Make long flat kababs of the paste.
3) Place the kababs on the greased multi cook tawa and high rack. Press start.
4) When beeps, turnover the kababs and press start again.

NOTE

- For binding roll the kababs in maida.

[H]: Corn Kababs

- **Weight Limit**: 0.2 ~ 0.4 kg
- **Utensil**: Multicook tawa, High rack

Ingredients

List		Weight-1	Weight-2	Weight-3
For Corn Kababs	Weight Limit	0.2 kg	0.3 kg	0.4 kg
	Boiled potatoes	2 medium	3 medium	4 medium
	Boiled sweet corns	0.25 cup	0.5 cup	1 cup
	Onions (Chopped)	0.25 cup	0.5 cup	1 cup
	Green chillies (Chopped)	1 no.	1 no.	2 nos.
	Fresh coriander (finely chopped)	1 tbsp	2 tbsps	3 tbsps
	Pudina (finely chopped)	0.5 tbsp	1 tbsp	1.5 tbsps
	Melted butter	0.25 tbsp	0.5 tbsp	1 tbsp
	Garam Masala, pepper powder, salt	As per taste		
	Lemon juice	2 tsps	3 tsps	3 tsps
	Bread crumbs	1 tbsp	2 tbsps	3 tbsps

Instructions

1) Mash the boiled potatoes and corns. Mix well.
2) Add onions, green chillies, coriander pudina, garam masala, melted butter, salt and pepper. Add bread crumbs and lemon juice. Add onions, green chillies, coriander pudina, garam masala, melted butter, salt and pepper. Add bread crumbs and lemon juice.
3) Make long kababs out of this mixture.
4) Keep the kababs on tawa and tawa on high rack. Select category and weight, then press start.
5) When beeps, turn over and press start.
6) When beeps, turn over and press start. Serve with chutney or sauce.

CH8: Bharwan Tamatar

- **Weight Limit**: 0.3 kg ~ 0.5 kg
- **Utensil**: Multicook tawa, High rack

Ingredients

List		Weight-1	Weight-2	Weight-3
For Bharwan Tamatar	Weight Limit	0.3 kg	0.4 kg	0.5 kg
	Tomato (Hollowed)	300 g	400 g	500 g
For Stuffing	Paneer (mashed)	200 g	250 g	300 g
	Salt, Red Chilli Powder, Garam Masala, Cumin Powder	As per taste		
	Onion Chopped	0.25 cup	0.25 cup	0.5 cup
	Coriander leaves Chopped	A few sprigs		
	Oil	0.25 tsp	0.5 tsp	1 tsp

Instructions

1) Precook the paneer stuffing- In a Microwave safe bowl add oil, Onions and microwave 100 % for 3 minutes. Add paneer and all the spices and coriander leaves and microwave 100% for 2 minutes
2) Stuff the hollowed tomatoes with paneer.
3) Grease the tomatoes with few drops of oil.
4) Keep the Tomatoes on tawa and tawa on high rack. Select category and weight, then press start.
5) Turn over the tomato and press start. Put oil.
6) Turn over the side again and press start. Garnish with fresh coriander leaves and serve.

CH9: Tandoori Aloo

- **Weight Limit**: 0.3 ~ 0.5 kg
- **Utensil**: Microwave safe glass bowl, Multicook tawa, High rack

Ingredients

List		Weight-1	Weight-2	Weight-3
For Tandoori Aloo	Weight Limit	0.3 kg	0.4 kg	0.5 kg
	Aloo (Cut into quarters)	300 g	400 g	500 g
	Hung Curd	2 tbsps	3 tbsps	4 tbsps
	Garlic Paste	1 cup	1.5 cups	2 cups
	Cumin powder, Red Chilli powder, salt	As per taste		
	Tandoori Masala	1 tsp	2 tsps	3 tsps
	Tandoori color	A pinch		

Instructions

1) Mix all the ingredients of marinade in a bowl.
2) Add the aloo pieces and keep for half hour.
3) Keep the marinated aloo on tawa and tawa on high rack. Select category and weight, then press start.
4) When beeps turn over the pieces and drizzle few drops of oil and press start again.Sprinkle chat masala or lemon juice and serve.

CH 10: Chicken Saute

- **Weight Limit**: 0.2 ~ 0.4 kg
- **Utensil**: Multicook tawa, High rack

Ingredients

List		Weight-1	Weight-2	Weight-3
For Chicken Saute	Weight Limit	0.2 kg	0.3 kg	0.4 kg
	Supreme chicken peices	200 g	300 g	400 g
For Marinade	Ginger garlic paste	2 tbsps	3 tbsps	4 tbsps
	Olive oil	1 tsp	1 tsp	1 tsp
	Black pepper	1 tsp	1.5 tsps	2 tsps
	Thyme/Basil leaves	0.5 tbsp	1 tbsp	1.5 tbsps
	Salt	As per taste		

Instructions

1) Mix all the ingredients of marinade in a bowl. Marinade the chicken pieces and keep in refrigerator for one hour.
2) Adjust the wooden skewers inside the chicken pieces (1 skew in 1 piece).
3) Transfer the chicken pieces on tawa and keep the tawa on high rack. Select menu and weight and press start.
4) When beeps, turn over the pieces and press start.
5) When beeps, turn over again and press start.

CH 11: Tandoori Mushrooms

- **Weight Limit**: 0.2 ~ 0.5 kg
- **Utensil**: Multicook tawa, High rack

Ingredients

List		Weight-1	Weight-2	Weight-3	Weight-4
For Tandoori muhrooms	Weight Limit	0.2 kg	0.3 kg	0.4 kg	0.5 kg
	Mushroom Buttons (stalk removed)	200 g	300 g	400 g	500 g
For Marinade	Hung Curd	1 tbsp	2 tbsps	3 tbsps	4 tbsps
	Ginger Garlic Paste	0.5 tbsp	1 tbsp	2 tbsps	2.5 tbsp
	Salt, Coriander powder, cumin powder, amchoor	As per taste			
	Cornflour	0.25 tsp	0.5 tsp	1 tsp	1.5 tsps
	Tandoori Color	A pinch			

Instructions

1) Mix all the ingredients of the marinade in a bowl.
2) Prick all the mushroom buttons and add to the marinade.
3) Keep the mushroom marinated for 1 hour.
4) Transfer the mushrooms on tawa and keep the tawa on high rack. Select category and weight, then press start.
5) When beeps, turn over the mushroom and press start.
6) When beeps, turn over again and press start.

NOTE

- Note: If mushroom run watery while cooking, drain water and start cooking again

CH 12: Mahi Tikka

- **Weight Limit**: 0.3 ~ 0.5 kg
- **Utensil**: Multicook tawa, High rack

Ingredients

List		Weight-1	Weight-2	Weight-3
For Mahi Tikka	Weight Limit	0.3 kg	0.4 kg	0.5 kg
	Fish fillets (Cut into 50 mm cubes)	300 g	400 g	500 g
For Marinade	Hung Curd	2 tbsps	3 tbsps	4 tbsps
	Thick cream	0.25 cup	0.25 cup	0.5 cup
	Ginger garlic paste	1 tsp	2 tsps	2.5 tsps
	Ajwain	0.25 tsp	0.5 tsp	0.5 tsp
	Garam masala	As per taste		
	Salt pepper	As per taste		
	Lemon juice	1 tbsp	2 tbsps	2.5 tbsps
	Red chilli powder, salt	As per taste		

Instructions

1) Rub the fish well with 3 tbsps besan and 2 tbsps lemon juice to remove the fishy odour. Keep aside for 15 minutes. Wash well and pat dry. Pick fish all over with a forks.
2) Mix all the ingredients of marinade. Add the fish pieces and keep aside for 3-4 hours.
3) Transfer the marinated fish pieces to tawa and keep tawa on high rack. Select category and weight, then press start.
4) When beeps, turn over the pieces and press start.
5) When beep, turn over the pieces and press start. Sprinkle chaat masala and serve onion slices.

NOTE

- Note: In case there is excessive water during cooking and drain it and restart.

C 13: Arbi Tandoori

- **Weight Limit**: 0.3 ~ 0.5 kg
- **Utensil**: Microwave safe glass bowl, Multicook tawa, High rack

Ingredients

List		Weight-1	Weight-2	Weight-3
For Arbi Tandoori	Weight Limit	0.3 kg	0.4 kg	0.5 kg
	Arbi (Cut into slices)	300 g	400 g	500 g
	Oil	1 tsp	1 tsp	1 tsp
	Onion rings	1 cup	1.5 cups	2 cups
	Garam Masala, Amchoor, Salt	As per taste		
	Green Chillies (Chopped)	2 nos.	3 nos.	4 nos.
	Ginger (shredded)	1 tsp	1.5 tsps	2 tsps
	Coriander Seeds	0.5 tsp	1 tsp	1 tsp
For Marinade	Hung Curd	2 tbsps	3 tbsps	4 tbsps
	Tandoori Masala	0.5 tbsp	1 tbsp	1.5 tbsps
	Ginger Paste	0.5 tsp	0.5 tsp	1 tsp
	Pepper corns (crushed)	4 nos.	5 nos.	6 nos.
	Ajwain	0.5 tsp	0.5 tsp	1 tsp.
	Haldi	A pinch		
	Salt	As per taste		
	Oil	0.5 tsp	0.5 tsp	1 tsp
	Besan	0.5 tbsp	0.5 tbsp	1 tbsp

Instructions

1) Pre-preparation –In a Microwave safe glass bowl arbi slices with some water. Cover and micro at 100% for 5 minutes
2) Mix all the ingredients of marinade in a bowl. Add the arbi slices and keep for 0.5 an hour.
3) In a Microwave safe glass bowl add oil, onion rings, shredded ginger and green chillies, garam masala, amchoor and salt. Mix well. Select category and weight, then press start.
4) When beeps, remove the bowl from microwave oven, Transfer the marinated arbi on tawa and keep the tawa on high rack.

5) Press start.
6) When beeps, drizzle few drops of oil. Add onion rings mixture and turn over the slices
7) Press start.

CH 14: Veg Kababs

- **Weight Limit**: 0.3 kg
- **Utensil**: Multicook tawa, High rack

Ingredients

List		Weight
For Veg kababs	Weight Limit	0.3 kg
	Boiled potatoes	200 g
	Grated paneer	100 g
	Chopped green chillies	2 nos.
	Chopped coriander	A few sprigs
	Roughly ground anardana seeds	1 tbsp
	Salt , Red chilli powder	As per taste

Instructions

1) Mix all the ingredients in a bowl. Mix well and shape them into rolls.
2) Select category and press start.
3) When beeps, keep the kababs on greased tawa and press start.
4) When beeps, turnover the kababs and press start again.

CH 15: Spicy Chicken Kababs

- **Weight Limit**: 0.2 ~ 0.4 kg
- **Utensil**: Spicy Chicken Kababs

Ingredients

List		Weight-1	Weight-2	Weight-3
For Spicy Chicken Kababs	Weight Limit	0.2 kg	0.3 kg	0.4 kg
	Boneless chicken (cut into 40 mm pieces)	200 g	300 g	400 g

List		Weight-1	Weight-2	Weight-3
For Marinade	Barbeque sauce	1 tbsp	1.5 tbsps	2 tbsps
	Olive oil	0.5 tsp	1 tsp	1 tsp
	Garlic powder / Ginger paste	1 tsp	1.5 tsps	2 tsps
	Red chilli flakes	1 tsp	1 tsp	1 tsp
	Black pepper (freshly crushed)	0.5 tsp	0.5 tsp	1 tsp
	Onion paste	1 tbsp	1.5 tbsps	2 tbsps
	Oregano	0.5 tsp	1 tbsp	1 tbsp
	Thyme	0.5 tsp	0.5 tsp	1 tsp
	Cumin powder	1 tsp	1.5 tsps	1.5 tsps
	Salt	As per taste		

Instructions

1) Clean and wash chicken pieces and cut into 40 mm cubes. Prick them with fork.
2) In a bowl take chicken pieces and add all the ingredients of marinade and mix well. Keep covered for at least 30-45 minutes in refrigerator.
3) Place all the marinated chicken pieces on tawa and place tawa on high rack. Keep in the microwave. Select category and weight, then press start.
4) When beeps, turn the chicken pieces. Remove excess water or liquid from the tawa (if present) and press start.
5) Serve spicy chicken kababs hot with mint chutney or onion rings.

CH 16: Kastoori Kababs

- **Weight Limit**: 0.2 ~ 0.4 kg
- **Utensil**: Multicook tawa, High rack

Ingredients

List		Weight-1	Weight-2	Weight-3
For Kastoori Kababs	Weight Limit	0.2 kg	0.3 kg	0.4 kg
	Boneless Chicken mince (Keema)	200 g	300 g	400 g

List		Weight-1	Weight-2	Weight-3
For Marinade	Ginger garlic paste	0.25 tbsp	0.5 tbsp	1 tbsp
	Lemon juice	0.25 tbsp	0.5 tbsp	1 tbsp
	Roasted besan	2 tbsps	3 tbsps	4 tbsps
	Bread crumbs	2 tbsps	3 tbsps	4 tbsps
	Pepper powder, Salt, Red chilli powder	As per taste		
	Ginger finely chopped	0.5 tsp	0.5 tsp	1 tsp
	Chopped Coriander leaves	2 tbsps	3 tbsps	4 tbsps
	Oil	1 tsp	1 tsp	1 tsp
	Choti elaichi powder	0.5 tsp	0.5 tsp	1 tsp
	Jeera	1 tsp	1 tsp	1 tsp
	Kesar (Soaked in ½ cup in milk)	0.5 tsp	0.5 tsp	1 tsp

Instructions

1) Wash the chicken mince in a strainer. Press well to squeeze out the water well.
2) Marinate the mince with all the ingredients mentioned under marinade.
3) Make flat Kababs of the mixture.
4) Keep the kababs on tawa and tawa on high rack. Select category and weight, then press start.
5) When beeps, turn over the kababs and press start, Sprinkle chaat masala and serve.

CH 17: Chilka Kababs

- **Weight Limit**: 0.4 kg
- **Utensil**: Microwave safe glass bowl, Multicook tawa, High rack

Ingredients

List		Weight
For Chilka Kababs	Weight Limit	0.4 kg
	Chana dal (soaked overnight)	200 g
	Snake gourd peels (roughly chopped)	0.5 cup
	Pumpkin peels (roughly chopped)	0.5 cup
	Whole black pepper	0.25 tsp
	Dried red chilli	1 no.
	Laung	3-4 nos.
	Black cardamom	1 no.
	Cinnamon	1" piece
	Water	0.5 cup
	Oil	0.5 tsp
	Javitri	1 no.
	Fresh coriander leaves	2 tbsps
	Salt	As per taste

Instructions

1) In a Microwave safe glass bowl take soaked chana dal, pumpkin peels, snake gourd peels and all the whole spices except salt and coriander leaves. Sprinkle 0.25 cup water and cover. Select category and press start.
2) When beeps, take out the bowl, remove javitri and black cardamom and allow to cool the mixture.
3) Grind the cooked mixture to a coarse paste in a mixer, adding 0.25 cup water and salt to taste. Take out in a bowl and add freshly chopped coriander leaves. Mix well with hands and make kababs of equal size and shape.
4) Grease the tawa with 0.25 tsp oil and put the kababs on it. Keep the tawa on high rack. Keep high rack and tawa with kababs inside the microwave and press start.
5) When beeps, sprinkle 0.25 tsp oil on all kababs and turnover the kababs and press start.
6) Serve the kababs hot with the chutney of your choice.

CH 18: Kaju Kababs

- **Weight Limit**: 0.1 ~ 0.3 kg
- **Utensil** : Microwave safe glass bowl, Multicook tawa, High rack

Ingredients

List		Weight-1	Weight-2	Weight-3
For Kaju Kababs	Weight Limit	0.1 kg	0.2 kg	0.3 kg
	Potato (cut into pieces)	0.5 no.	1 no.	1.5 no.
	Onion (chopped)	0.5 no.	1 no.	1 no.
	Peas (shelled)	3 tbsps	4 tbsps	4 tbsps
	Cauliflower (florets)	0.5 cup	0.5 cup	0.75 cup
	Ginger-garlic paste	0.5 tsp	1 tsp	1 tsp
	Kaju powder	2 tbsps	4 tbsps	5 tbsps
	Fresh bread crumbs (sides removed)	3 slices	4 slices	4 slices
	Green chilli (chopped)	1 no.	2 nos.	2 nos.
	Tomato ketchup	0.5 tsp	1 tsp	1 tsp
	Salt, red chilli powder, garam masala	As per taste		
	Coriander leaves (chopped)	1 tbsp	1.5 tbsps	2 tbsps

Instructions

1) In a Microwave safe glass bowl take cut potatoes, chopped onion, peas and cauliflower. Put 0.5 cup water and cover. Select category and weight, then press start.
2) When beeps, remove the bowl, strain the vegetables. Remove all the moisture and mash well when cool.
3) To the mashed vegetables add all the spices, chopped green chilli, coriander leaves, kaju powder, ginger-garlic paste, tomato ketchup, fresh bread crumbs. Mix all the ingredients very well. Make equal sized kababs out of the mixture.
4) Keep the kabaps on tawa and tawa on high rack. Keep inside the microwave and press start.
5) When beeps turn the kababs and press start. Serve them hot with mint chutney.

CH 19: Mutton and Tomato Kababs

- **Weight Limit**: 0.3 kg
- **Utensil**: Microwave safe glass bowl, Multicook tawa, High rack

Ingredients

List		Weight
For Mutton And Tomato Kababs	Weight Limit	0.3 kg
	Minced mutton	300 g
	Badi Elaichi	1 no.
	Dalchini	50 mm piece
	Laung	3-4 nos.
	Whole black pepper	8 to10 nos.
	Dried red chilli	2 nos.
	Bread crumbs	0.25 cup
	Green chilli (chopped)	2 nos.
	Coriander (chopped)	2 tbsps
	Lemon juice (optional)	1 tsp
	Salt, red chilli powder, garam masala	As per taste
	Tomatoes (cut into big pieces)	2 nos.

Instructions

1) In a Microwave safe glass bowl take minced mutton, laung, badi elaichi, cinnamon, dried red chilli, whole black peppers. Mix well and cover. Select category and press start.
2) When beeps, take out the bowl, remove cover and remove all the whole spices and discard the water. Allow the mutton to get cooled and grind the mutton coarsely.
3) Take the ground mutton in a bowl, add all the spices, chopped green chilli, coriander leaves, bread crumbs and lemon juice (optional) and mix very well.
4) Make equal sized round kababs from the mixture and keep on greased tawa. Keep the tawa on high rack. Keep inside the microwave and press start.
5) When beeps, turnover the kababs and keep tomato pieces (seeds removed) and press start. Serve them hot with mint chutney.

CH20: Bharwan Bhindi

- **Weight Limit**: 0.2 ~ 0.4 kg
- **Utensil**: Microwave safe glass bowl, Multicook tawa, High rack

Ingredients

List		Weight-1	Weight-2	Weight-3
For Bharwan Bhindi	Weight Limit	0.2 kg	0.3 kg	0.4 kg
	Bhindi	200 g	300 g	400 g
	Oil	0.25 tsp	0.5 tsp	1 tsp
	Jeera	0.25 tsp	0.5 tsp	1 tsp
	Onion (chopped)	0.5 no.	1 no.	1 no.
	Green Chillies	1 no.	2 nos.	2 nos.
	Ginger	0.25"	0.25"	0.5"
	Hing	A pinch		
	Tomato	0.5 no.	1 no.	1 no.
For Stuffing	Coriander Powder	1 tsp	2 tsps	3 tsps
	Turmeric Powder	1 tsp	1.5 tsps	2 tsps
	Saunf Powder	1 tsp	1.5 tsps	2 tsps
	Amchoor	1 tsp	1.5 tsps	2 tsps
	Red Chilli Powder, Salt	As per taste		

Instructions

1) Cut stalk of each bhindi and make lengthwise slit.
2) Combine stuffing ingredients and mix well stuff each bhindi with this mixture.
3) In Microwave safe glass bowl add oil, jeera, onion, green chilli, ginger, tomato and hing. Select category and weight, then press start.
4) When beeps, remove the bowl from microwave oven and keep the stuffed bhindi on tawa, drizzle few drops of oil on bhindis. Keep tawa on high rack.
5) Press start.
6) When beeps, turn over bhindis and add the onion mixture and mix well.
7) Press start.

CH2 1: Tandoori Jhinga

- **Weight Limit**: 0.2 ~ 0.5 kg
- **Utensil**: Multicook tawa, High rack

Ingredients

List		Weight-1	Weight-2	Weight-3	Weight-4
For Bharwan Baigan	Weight Limit	0.2 kg	0.3 kg	0.4 kg	0.5 kg
	King Size Prawns	200 g	300 g	400 g	500 g
Ist Marinade	Lemon juice	2 tbsps	2.5 tbsp	3 tbsps	3.5 tbsp
	Salt, Red chilli powder	As per taste			
	Oil	0.5 tsp	1 tsp	1 tsp	1 tsp
2nd Marinade	Thick cream	2 tbsps	3 tbsps	4 tbsps	4 tbsps
	Mozarella cheese (grated)	1 tsp	2 tsps	3 tsps	4 tsp
	Oil	1 tsp	1 tsp	1 tsp	1 tsp
	Red Chilli Powder	As per taste			
	Tandoori Masala	1 tsp	2 tsps	3 tsps	3.5 tsp
	Cornflour	2 tsps	3 tsps	4 tsp	5 tsp
	Garam Masala	As per taste			
	Ginger Paste	2 tsps	2.5 tsps	3 tsps	3.5 tsp
	Tandoori Colour/Haldi	A pinch (for colour)			
	Hung Curd	1 tbsp	2 tbsps	3 tbsps	4 tbsps

Instructions

1) Devein and wash prawns. Marinate the prawns with 1st marinade for 0.5 hour.
2) Mix all the ingredients of 2nd marinade in a bowl. Pick up the prawns, discarding the lemon juice and add to the 2nd marinade and keep in refrigerator for 2-3 hours or more.
3) Transfer the marinated prawns on tawa and keep the tawa on high rack. Select category and weight, then press start.
4) When beeps, drizzle few drops of oil and turn over the side. Press start. Serve in pudina chutney.

NOTE

- Note: In case the prawns get watery, drain excess water and then cook.

CH22: Malai Tikka (For MJ2887BFUM, MJ2887BWUM, MJ2887BIUM model)

- **Weight Limit**: 0.3 kg
- **Utensil**: Rotisserie

Ingredients

List		Weight
For Malai Tikka	Weight Limit	0.3 kg
	Boneless Chicken (40 mm pieces)	300 g
	Oil	1 tsp
For Marinade	Thick cream	0.25 cup
	Green cardamom powder	0.25 tsp
	Pepper powder	As per taste
	Garlic paste	0.5 tsp
	Ginger paste	1 tsp
	Melted butter	0.25 tbsp
	Garam masala, amchoor, jeera powder, salt	As per taste
	Green chillies	1 no.

Instructions

1) Mix all the ingredients of the marinade in a bowl. Marinate Chicken and keep in refrigerator for 1 hour.
2) Grease the rotisserie skewers with some oil. Put the chicken pieces on skewers. Assemble the rotisserie. Install the rotisserie in the microwave, spread the tissue paper on the glass tray.
3) Select category and press start.
4) When beeps, add 1 tsp oil and again press start. Sprinkle the chaat masala and serve.

CH22: Malai Tikka (For MJ2887BHTM model)

- **Weight Limit**: 0.3 kg
- **Utensil**: Multi cook tawa, low rack

Ingredients

List		Weight
For Malai Tikka	Weight Limit	0.3 kg
	Boneless Chicken (40 mm pieces)	300 g
	Oil	1 tsp
For Marinade	Thick cream	0.25 cup
	Green cardamom powder	0.25 tsp
	Pepper powder	As per taste
	Garlic paste	0.5 tsp
	Ginger paste	1 tsp
	Melted butter	0.25 tbsp
	Garam masala, amchoor, jeera powder, salt	As per taste
	Green chillies	1 no.

Instructions

1) Mix all the ingredients of the marinade in a bowl. Marinate Chicken and keep in refrigerator for 1 hour.
2) Take out marinated chicken from refrigerator and place it on tawa. Keep tawa on low rack. Select category and press start.
3) When beeps, turn over chicken pieces and again press start.
4) Sprinkle the chaat masala and serve.

[H23]: Tikka Achaari (For MJ2887BFUM, MJ2887BWUM, MJ2887BIUM model)

- **Weight Limit**: 0.3 kg
- **Utensil**: Microwave safe glass bowl, Rotisserie

Ingredients

List		Weight
For Tikka Achaari	Weight Limit	0.3 kg
	Boneless mutton (Cut into 40 mm pieces)	300 g

List		Weight
For Marinade	Hung curd	2 tbsps
	Raw papaya Paste (Green papaya, peeled, deseed and grind in a mixer	0.5 tbsp
	Onion (Sliced)	0.25 cup
	Salt, Red chilli powder, Amchoor powder	As per taste
	Saunf	2 tsps
	Jeera	0.5 tsp
	Mustard seeds	0.5 tsp
	Ginger garlic paste	0.5 tbsp
	Tandoori Color	A pinch
	Methidana	A pinch

Instructions

1) Wash and pat dry the mutton pieces. Prick them with a fork.
2) Mix all the ingredients of marinade in a bowl. Add the mutton pieces and keep for 3-4 hours in refrigerator.
3) Remove from fridge and let them come to room temperature.
4) In a Microwave safe glass bowl add the marinated pieces. Select category and press start.
5) When beeps, remove the bowl from microwave oven, spread the tissue paper on glass tray and insert the mutton pieces in rotisserie skewers. Assemble the rotisseries and install in the microwave.
6) Press start.
7) When beeps, pour 1 tsp oil on the mutton pieces.
8) Press start.

CH23: Tandoori Sabzi (For MJ2887BHTM model)

- **Weight Limit**: 0.3 kg
- **Utensil**: Microwave safe (MWS) glass bowl, Multicook tawa, High rack

Ingredients

List		Weight
For Tandoori Sabzi	Paneer (Cut 25 mm)	300 g
	Salt,Red chilli powder	As per taste
	Lemon juice	1 tsp
	Oil	1 tsp
	Capsicum (Cut into fine cubes)	1 cup
	Onion (Cut into fine cubes)	2 cups
	Black salt	As per taste
	Tandoori Masala	2 tsps
	Tandoori Color	A pinch
For Paste	Ginger	40 mm piece
	Green Chillies	2 nos.
	Jeera	1 tsp
	Garlic flakes (Optional)	3 nos.

Instructions

1) Grind garlic, ginger, jeera and green chillies to a thick rough paste. Do not add water. Keep the paste aside.
2) Add salt, chilli powder and lemon juice to the paste. Add the tandoori color.
3) Cut the paneer into pieces. Apply the paste on all the pieces properly
4) In a MWS glass bowl add oil, capsicum and onion. Select category and press start.
5) When beeps, remove the bowl from microwave oven and add lemon juice, black salt, keep aside.
6) Keep the paneer pieces on tawa and tawa on high rack. Press start.
7) When beeps, add the capsicum and onion cubes that was prepared in step 5 and mix well. Drizzle few oil drops. Again press start
8) Tandoori sabzi is ready to serve.

CH24: Faldari Kababs

- **Weight Limit**: 0.4 kg
- **Utensil**: Multicook tawa, High rack

Ingredients

List		Weight
For Faldari Kababs	Weight Limit	0.4 kg
	Boiled and mashed raw bananas	2 nos.
	Boiled and mashed shakarkandi	2 nos.
	Peeled and grated apple	0.5 cup
	Fresh coriander (chopped)	2 tbsps
	Fresh mint leaves (chopped)	2 tbsps
	Green chillies (chopped)	2 nos.
	Ginger (chopped)	2 tsps
	Bread crumbs	0.5 cup
	Salt, red chilli powder, jeera powder	As per taste
For Stuffing	Chopped almonds	2 tbsps
	Chopped cashewnuts	2 tbsps
	Chopped raisins	2 tbsps

Instructions

1) In a bowl take chopped almonds, cashewnuts and raisins for stuffing. Mix well and keep aside for later use.
2) In another bowl take boiled and mashed banana, shakarkandi, grated apple, chopped coriander and mint leaves, chopped ginger and green chillies and all the spices. Mix well. When the mixture cools down, add bread crumbs and mix well to make a dough for kababs.
3) Divide the dough into 10 equal portions. Make round balls. Flatten each ball and fill stuffing (as required) in the center and again re-shape into round kababs.
4) Place kababs on tawa and tawa on high rack. Put both inside the microwave. Select category and press start.
5) When beeps, turnover the kababs and press start.
6) When beeps, again turnover the kababs and press start. Serve kababs hot with chutney of your choice.

CH25: Dahi Kababs

- **Weight Limit**: 0.2 ~ 0.4 kg
- **Utensil**: Multicook tawa, High rack

Ingredients

List		Weight-1	Weight-2	Weight-3
For Dahi Kababs	Weight Limit	0.2 kg	0.3 kg	0.4 kg
	Boiled potatoes	100 g	200 g	250 g
	Boiled peas	50 g	75 g	100 g
	Chopped and boiled spinach	2 tbsps	3 tbsps	4 tbsps
	Hung curd	2 tbsps	3 tbsps	4 tbsps
	Grated ginger	1 tsp	1.5 tsps	2 tsps
	Chopped green chillies	0.5 tbsp	1 tbsp	1.5 tbsps
	Chopped almonds	0.5 tbsp	1 tbsp	1.5 tbsps
	Chopped raisins	0.5 tbsp	1 tbsp	1.5 tbsps
	Besan	1 tbsp	2 tbsps	3 tbsps
	Chopped coriander leaves	1 tbsp	2 tbsps	3 tbsps
	Salt, garam masala, red chilli powder	As per taste		
	Oil	1 tsp	1 tsp	1 tsp
	Cornflour	For coating		

Instructions

1) In a bowl mix all the ingredients except oil and cornflour. Mix well while mashing the potatoes and peas. Make flat kababs and roll each kabab in cornflour.
2) Keep the kababs on tawa and keep the tawa on high rack. Select category and weight, then press start.
3) When beeps, turn over the kababs, pour the oil and press start.
4) When beeps, turn over again and press start. Serve with coriander chutney.

Indian Cuisine

I C I: Mix Veg

- **Weight Limit**:0.1 ~ 0.5 kg
- **Utensil**: Microwave safe bowl

Ingredients

List		Weight-1	Weight-2	Weight-3	Weight-4	Weight-5
For Mix Veg	Weight Limit	0.1 kg	0.2 kg	0.3 kg	0.4 kg	0.5 kg
	Mix Veg. (Carrot, Cauliflower, peas, beans, potato)	100 g	200 g	300 g	400 g	500 g
	Oil	0.25 tbsps	0.5 tbsp	1 tbsp	1.5 tbsps	2 tbsps
	Onion (chopped)	0.5 cup	1 cup	1.5 cups	2 cups	2 cups
	Tomato (chopped)	0.25 cup	1 cup	1.5 cups	1.5 cups	1.5 cups
	Salt, Cumin powder, Garam masala, Red Chilli powder, Coriander powder	As per taste				

Instructions

1) In a Microwave safe bowl add oil, onion, tomato and all spices. Mix well, select menu and weight, then press start.
2) When beeps, remove and mix well. Add vegetable and some water. Cover and press start.
3) When beeps, mix well. Cover and press start. Garnish with coriander leaves.

I C2: Kadhai Paneer

- **Weight Limit**: 0.1 ~ 0.5 kg
- **Utensil**: Microwave safe bowl

Ingredients

List		Weight-1	Weight-2	Weight-3	Weight-4	Weight-5
For Kadhai Paneer	Weight Limit	0.1 kg	0.2 kg	0.3 kg	0.4 kg	0.5 kg
	Capsicum and Onion (sliced)	0.5 cup	1 cup	1.5 cups	2 cups	2.5 cups
	Onion Paste	3 tbsps	4 tbsps	5 tbsps	6 tbsps	6.5 tbsps
	Tomato Puree	2 tbsps	3 tbsps	4 tbsps	4.5 tbsps	5 tbsps
	Ginger-Garlic Paste, Salt and Sugar	As per taste				
	Red Chilli Powder, Haldi, Kasuri Methi, Garam Masala	As per taste				
	Butter	1.5 tbsps	2 tbsps	3 tbsps	3.5 tbsps	4 tbsps
	Fresh Cream	1 tbsp	2 tbsps	3 tbsps	4 tbsps	5 tbsps
	Oil	0.5 tbsp	1 tbsp	2 tbsps	2.5 tbsps	3 tbsps

Instructions

1) In Microwave safe bowl, add oil, onion paste, ginger-garlic paste, sliced capsicum and onion. Mix well, cover. select menu and weight, then press start.
2) When beep, add tomato puree, butter, fresh cream, haldi, red chilli powder, garam masala, kasuri methi, salt, sugar and paneer cubes, mix well and press start. Stand for 5 minutes. Garnish with hara dhania and serve hot.

I C3: Dal Tadka

- **Weight Limit**: 0.2 kg
- **Utensil**: Microwave safe bowl

Ingredients

List		Weight
For Dal Tadka	Weight Limit	0.2 kg
	Dal (soaked for 2 hours)	200 g
	Water	400 ml
	Oil	2 tbsps
	Rai, Roasted Jeera, Kasuri methi, Hara dhania, Curry leaves, Hing, Haldi, Hari mirch, Dhania powder	As per taste
	Salt,	As per taste

Instructions

1) Take dal in Microwave Safe bowl, add Water, Haldi and Hing.
2) Select menu and weight, then press start to cook.
3) When beeps, take another bowl add oil, roasted jeera, hari mirch, curry leaves, salt, dhania powder, hara dhania, kasuri methi (optional). Press start.
4) When beeps, add dal, water (if required), mix well and again press start.

I C4: Sambhar

- **Weight Limit**: 0.2 kg
- **Utensil**: Microwave safe bowl

Ingredients

List		Weight
For Sambhar	Weight Limit	0.2 kg
	Arhar Dal (Soaked for 2 hrs)	200 g
	Oil	2 tbsps
	Onion chopped	1 medium
	Tomato chopped	1 medium
	Mixed Vegetables chopped - Drumsticks, ghiya, Brinjals, Red Pumpkin	1 cup
	Boiled Water	400 ml
	Imli pulp, Green Chilli, Sambhar Masala, Salt, Gud	As per your taste

Instructions

1) Soak dal for 2 hours, In Microwave Safe Bowl take dal, haldi, onion, green chilli, tomato, mix vegetables and boiled water. Select menu and press start.
2) When beeps, in another Microwave Safe Bowl take oil, add rai, hing, curry leaves, dhania, red chilli. Press start.
3) When beeps, mash dal very well and add to tadka. Add imli pulp sambhar masala, gud and some water (if required). Press start. Stand for 5 minutes. Garnish with coconut and hara dhania and serve with Idli.

I C5: Dum Aloo

- **Weight Limit**: 0.1 ~ 0.5 kg
- **Utensil**: Microwave safe bowl

Ingredients

List		Weight-1	Weight-2	Weight-3	Weight-4	Weight-5
For Dum Aloo	Weight Limit	0.1 kg	0.2 kg	0.3 kg	0.4 kg	0.5 kg
	Boiled Aloo (small)	100 g	200 g	300 g	400 g	500 g
	Oil	2 tbsps	3 tbsps	3 tbsps	3.5 tbsps	3.5 tbsps
	Jeera, pepper seeds, cloves, hing	As required				
	Onion paste	2 tbsps	3 tbsps	4 tbsps	5 tbsps	6 tbsps
	Ginger and garlic paste	1 tsp	1.5 tsps	1.5 tsps	2 tsps	2 tsps
	Tomato puree	1 tbsp	2 tbsps	3 tbsps	4 tbsps	5 tbsps
	Curd	0.5 cup	1 cup	1 cup	1.5 cups	1.5 cups
	Turmeric powder, red chilli powder, deghi mirch, salt, garam masala, saunf powder	As per taste				

Instructions

1) In a Microwave safe bowl add oil, jeera, pepper seeds, cloves, hing, onion paste, ginger garlic paste. Mix well.
2) select menu and weight, then press start.
3) When beeps, mix well and add tomato puree and boiled potatoes. Mix well and cover. Press start.
4) When beeps, mix well and add curd. Cover and press start.
5) Allow to stand for 3 minutes.

I CB: Baigan Ka Bharta

- **Weight Limit**: 0.3 ~ 0.5 kg
- **Utensil**: Microwave safe bowl

Ingredients

List		Weight-1	Weight-2	Weight-3
For Baigan Ka Bharta	Weight Limit	0.3 kg	0.4 kg	0.5 kg
	Baingan (Chopped in big pieces)	300 g	400 g	500 g
	Oil	1 tbsp	1.5 tbsps	2 tbsps
	Chopped onions	1 cup	1.5 cups	2 cups
	Chopped green chillies	3 nos.	4 nos.	5 nos.
	Chopped ginger	1 tbsp	1.5 tbsps	2 tbsps
	Chopped tomato	2 nos.	3 nos.	4 nos.
	Tomato puree	4 tbsps	5 tbsps	6 tbsps
	Salt, dhania powder, garam masala, red chilli powder, haldi	As per taste		
	Chopped coriander leaves	A few sprigs		

Instructions

1) In a Microwave safe bowl add peeled and chopped baigan. Sprinkle some water. Cover. select menu and weight, then press start.
2) When beeps, remove and mash the baigan well.
3) In another Microwave safe bowl add oil, chopped onion, green chillies, ginger, tomato, tomato puree, salt, dhania powder, garam masala, red chilli powder, haldi. Mix well. Cover and press start.

4) When beeps, mix well. Add the mashed baingan and mix well. Press start. Allow to stand for 3 minutes. Garnish with coriander leaves.

I C7: Kadhi

- **Weight Limit**: 0.3 ~ 0.5 kg
- **Utensil**: Microwave safe bowl

Ingredients

List		Weight-1	Weight-2	Weight-3
For Kadhi	Weight Limit	0.3 kg	0.4 kg	0.5 kg
	Besan	25 g	50 g	75 g
	Curd / matha	0.5 cup	1 cup	1.5 cups
	Oil	1 tbsp	1.5 tbsps	2 tbsps
	Rai, cumin seeds	As per taste		
	Chopped onions	1 cup	1.5 cups	1.5 cups
	Salt, red chilli powder, haldi, coriander powder, amchur	As per taste		
	Water	2 cups	3 cups	4 cups

Instructions

1) In a Microwave safe bowl add oil, rai, jeera, chopped onion. Select menu and weight, then press start.
2) When beeps, mix and add besan, curd/matha, salt, red chilli powder, haldi, coriander powder, amchur powder, water (0.5 the amount mentioned per weight). Mix and press start.
3) When beeps, mix and add remaining water and press start. Pour tempering and serve.

I C8: Baati

- **Weight Limit**: 0.4 kg
- **Utensil**: Multicook tawa , Low Rack

Ingredients

List		Weight
For Baati	Weight Limit	0.4 kg
	Wheat Flour	200 g
	Suji	50 g
	Melted Ghee	75 ml (5 tbsps.)
	Jeera	0.5 tsp
	Ajwain	0.25 tsp
	Baking powder	0.25 tsp
	Salt, turmeric powder	As per taste/required

Instructions

1) In a bowl, mix all the ingredients, but ghee only 3 tbsps. Knead the dough with little warm water to make it like poori dough. Cover and keep for half an hour.
2) Make medium sized balls of the dough. Keep them on tawa and keep the tawa on low rack. Keep aside.
3) Select category and press start.(Pre-heat)
4) When beeps, keep baati on tawa and press start.
5) When beeps, turn over. Press start. Dip the baati in melted ghee and serve with dal.

I C9: Dalma

- **Weight Limit**: 0.3 kg
- **Utensil**: Microwave safe bowl

Ingredients

List		Weight
For Dalma	Weight Limit	0.3 kg
	Moong dal (soaked for 2 hours)	300 g
	Water	600 ml
	Chopped vegetables (drumsticks, potato, raw banana, pumpkin, brinjal, tomato)	2 cups

List		Weight
For tadka	Oil	2 tbsps
	Bay leafs, jeera, dry chillies, salt, haldi	As per taste
	Grated coconut	4 tbsps
	Chopped onion	1 no.

Instructions

1) In a Microwave safe bowl add soaked moong dal, chopped vegetables and water. Mix well. Select menu and press start.
2) When beeps, in another Microwave safe bowl add oil, bay leafs, jeera, dry chillies, salt, haldi, grated coconut and chopped onion. Mix well and press start.
3) When beeps, mix well add the tadka ingredients to the dal. Mix well and press start.

I C 10: Gujarati Tuvar Dal

- **Weight Limit**: 0.3 kg
- **Utensil**: Microwave safe bowl

Ingredients

List		Weight
For Gujarati Tuvar Dal	Weight Limit	0.3 kg
	Tuvar dal / Arhar dal (soaked for 2 hours)	300 g
	Water	600 ml
	Oil	1 tbsp
	Mustard seeds	0.5 tsp
	Jeera	0.5 tsp
	Finely chopped ginger	1 tbsp
	Slit green chillies	3 nos.
	Curry leaves	A few
	Chopped tomato	2 nos.
	Chopped onion	1 no.
	Hing	A pinch
	Salt, turmeric powder, red chilli powder	As per taste
	Jaggery (Gud)	As per taste

Instructions

1) In a Microwave safe bowl add tuvar dal, salt, hing, turmeric powder, water. Mix well. Select menu and press start.
2) When beeps, remove the dal.
3) In another Microwave safe bowl add oil, mustard seeds, jeera, finely chopped ginger, slit green chillies, curry leaves, chopped, onions, red chilli powder. Mix well and press start.
4) When beeps, remove the bowl and add these ingredients to the dal. Add tomato, jaggery and mix well. Press start. Squeeze lemon juice and serve.

1 C 1 1: Butter Chicken

- **Weight Limit**: 0.3 ~ 0.5 kg
- **Utensil**: Microwave safe bowl

Ingredients

List		Weight-1	Weight-2	Weight-3
For Butter Chicken	Weight Limit	0.3 kg	0.4 kg	0.5 kg
	Chicken (boneless)	300 g	400 g	500 g
	Ginger garlic paste	2 tbsps	2.5 tbsps	3 tbsps
	Tomato puree	0.5 cup	1 cup	1 cup
	Chopped onions	1 no.	1 no.	2 nos.
	Garam masala, dhania powder, jeera powder, kasuri methi, red chilli powder, salt	As per taste		
	Kaju paste	2 tbsps	2.5 tbsps	3 tbsps
	Fresh cream	1 cup	1.5 cups	1.5 cups
	Butter	2 tbsps	3 tbsps	3.5 tbsps
	Oil	2 tbsps	2.5 tbsps	2.5 tbsps
	Slit green chillies	3 nos.	4 nos.	5 nos.

Instructions

1) In a Microwave safe bowl add oil, ginger garlic paste, chopped onions, garam masala, dhania powder, jeera powder, salt. Mix well. select menu and weight, then press start.
2) When beeps, mix well, add tomato puree, red chilli powder, kasuri methi, chicken pieces. Mix well and cover. Press start.
3) When beeps, mix well, add kaju paste, cream and butter. Mix well and cover. Press start.
4) Garnish with slit chillies.

I C 12: Beans Porial

- **Weight Limit**: 0.1 ~ 0.3 kg
- **Utensil**: Microwave safe bowl

Ingredients

List		Weight-1	Weight-2	Weight-3
For Beans Porial	Weight Limit	0.1 kg	0.2 kg	0.3 kg
	French beans (cut evenly)	100 g	200 g	300 g
	Oil	1 tsp	1 tsp	2 tsps
	Mustard seeds	0.25 tsp	0.5 tsp	0.5 tsp
	Urad dhal	0.25 tsp	0.5 tsp	0.5 tsp
	Grated coconut	2 tbsps	3 tbsps	4 tbsps
	Green chillies	1 no.	2 nos.	3 nos.
	Salt	As per taste		

Instructions

1) In a Microwave safe bowl add oil, mustard seeds, urad dal, green chillies and salt. select menu and weight, then press start.
2) When beeps, add beans, sprinkle little water. Cover and press start.
3) Add grated coconut, cover and stand for 3 minutes.

I C 13: Kashmiri Kaju Paneer

- **Weight Limit**: 0.1 ~ 0.5 kg
- **Utensil**: Microwave safe bowl

Ingredients

List		Weight-1	Weight-2	Weight-3	Weight-4	Weight-5
For Kashmiri Kaju Paneer	Weight Limit	0.1 kg	0.2 kg	0.3 kg	0.4 kg	0.5 kg
	Paneer pieces	100 g	200 g	300 g	400 g	500 g
	Kaju paste	2 tsps	3 tsps	4 tsps	5 tsps	6 tsps
	Sliced onions	0.5 no.	1 no.	1.5 nos.	1.5 nos.	2 nos.
	Chopped ginger	1 tsp	2 tsps	3 tsps	4 tsps	5 tsps
	Chopped garlic	1 tsp	2 tsps	3 tsps	4 tsps	5 tsps
	Chilli powder	As per taste				
	Khus Khus paste	1 tbsp	2 tbsps	3 tbsps	4 tbsps	5 tbsps
	Tomato puree	0.5 cup	1 cup	1.5 cups	2 cups	2 cups
	Milk	0.25 cup	0.5 cup	1 cup	1.5 cups	1.5 cups
	Garam masala and salt	As per taste				

Instructions

1) In a Microwave safe bowl add oil, onion slices, chopped ginger and garlic. select menu and weight, then press start.
2) When beeps, mix well, add khus khus paste, kaju paste, tomato puree, chilli powder, garam masala and salt and press start.
3) When beeps, mix well, add paneer pieces and milk. Press start. Stand for 3 minutes.

IC 14: Veg Handva

- **Weight Limit**: 0.3 kg
- **Utensil**: Microwave safe flat glass dish, Low rack, High rack

Ingredients

List		Weight
For Veg Handva	Weight Limit	0.3 kg
	Rice	200 g (1 cup)
	Urad Dal (Dehusked)	0.5 cup
	Boiled vegetables (Potato, Carrots, Peas, Palak)	2 cups
	Oil	1 tsp
	Lemon juice	2 tsps
	Baking soda	A pinch
	Chilli powder, turmeric powder, salt	As per taste
	Ginger and chilli paste	1 tsp
	Mustard seeds	1 tsp
	Curry leaves	A few sprigs
	Hing	0.25 tsp

Instructions

1) Clean, wash and soak the rice and dal together in enough water for at least 4 to 5 hours. Drain and keep aside.
2) Blend in a mixer till smooth, add the curds and mix well. Cover and keep aside to ferment overnight.
3) After fermentation, add salt, chilli powder, turmeric powder, Baking soda, ginger and green chilli paste. Mix well.
4) In a Microwave safe bowl, add oil, mustard seeds and curry leaves and microwave for 2 minutes and keep aside.
5) Add the boiled vegetables to the fermented batter, add the tadka prepared and lemon juice and hing. Mix well all the ingredients.
6) Pour the batter in Microwave safe flat glass dish.
7) Select menu, then press start. (Pre-heat process)
8) When beeps, keep the Microwave safe flat glass dish on low rack, then press start.
9) When beeps, transfer the Microwave safe flat glass dish to high rack, then press start.

I C 15: Gatte Ki Sabzi

- **Weight Limit**: 0.3 ~ 0.5 kg
- **Utensil**: Microwave safe bowl

Ingredients

List		Weight-1	Weight-2	Weight-3
For Gatte Ki Sabzi	Weight Limit	0.3 kg	0.4 kg	0.5 kg
For Making gattas	Besan	100 g	125 g	150 g
	Red chilli powder, haldi, dhania powder, salt	As per taste		
	Water	As required		
For Subzi	Oil	1 tbsp	1.5 tbsps	2 tbsps
	Rai, jeera	2 tsps	2 tsps	3 tsps
	Curry leaves	A few		
	Sour curd	1 cup	1 cup	1.5 cups
	Red chilli powder, haldi, dhania powder, salt	As per taste		
	Tomato puree	0.25 cup	0.5 cup	1 cup

Instructions

1) In a bowl mix besan, red chilli powder, haldi, dhania powder, salt. Add water, little oil and make it like a chapati dough.
2) After making the dough break the dough into different pieces and make the rolls out of those pieces.
3) In a Microwave safe bowl add the rolls and water (to cover the rolls completely). Cover.
4) Select menu and weight, then press start.
5) When beeps, remove. Take out the gattas, allow to cool. Cut them into slices.
6) In a Microwave safe bowl add oil, rai, jeera, curry leaves, tomato puree, red chilli powder, dhaniya powder, haldi, salt. Cover and press start.
7) When beeps, add beaten curd, gattas and haldi. Mix well and press start.

IC 16: Aloo Gobhi

- **Weight Limit**: 0.3 ~ 0.5 kg
- **Utensil**: Microwave safe bowl

Ingredients

List		Weight-1	Weight-2	Weight-3
For Aloo Gobhi	Weight Limit	0.3 kg	0.4 kg	0.5 kg
	Potatoes (chopped)	150 g	200 g	250 g
	Cauliflower florets	150 g	200 g	250 g
	Oil	1 tbsp	2 tbsps	3 tbsps
	Jeera	1 tbsp	1 tbsp	1 tbsp
	Chopped onion	0.5 cup	0.5 cup	1 cup
	Chopped green chillies	1 no.	2 nos.	3 nos.
	Coriander powder, red chilli powder, haldi, salt, garam masala	As per taste		
	Coriander leaves	A few sprigs		

Instructions

1) In a Microwave safe bowl add oil, jeera, chopped onion, green chillies, mix well. select menu and weight, then press start.
2) When beeps, mix well and add potatoes (chopped in medium sizes), cauliflower florets, coriander powder, red chilli powder, haldi, salt, garam masala and mix well. Add some water Cover. Press start.
3) When beeps, mix well and add coriander leaves and cover. Press start. Allow to stand for 15 mins with cover inside the microwave. Garnish with coriander leaves and serve.

I C 17: Matar Paneer

- **Weight Limit**: 0.2 - 0.4 kg
- **Utensil**: Microwave safe bowl

Ingredients

List		Weight-1	Weight-2	Weight-3
For Matar Paneer	Weight Limit	0.2 kg	0.3 kg	0.4 kg
	Matar	100 g	150 g	200 g
	Paneer Cubes	100 g	150 g	200 g
	Oil	1 tbsp	1.5 tbsps	2 tbsps
	Tomato puree	0.25 cup	0.5 cup	1 cup
	Chopped Onion	1 tbsp	1.5 tbsps	2 tbsps
	Chopped Ginger	1 tsp	1.5 tsps	2 tsps
	Chopped garlic	1 tsp	1.5 tsps	2 tsps
	Jeera powder, salt, haldi, red chilli powder, garam masala	As per taste		
	Coriander leaves	A few sprigs		
	Water	0.25 cup	0.5 cup	1 cup

Instructions

1) In a Microwave safe bowl add oil, chopped ginger, garlic, onion. Mix well select menu and weight, then press start.
2) When beeps, mix well, add paneer cubes, peas, tomato puree, jeera, powder, salt, haldi, red chilli powder, garam masala. Mix well cover. Press Start.
3) When beeps, mix well, add water, coriander leaves and cover. Press start. Stand for 5 minutes.

IC 18: Kadhai Chicken

- **Weight Limit**: 0.1 ~ 0.5 kg
- **Utensil**: Microwave safe bowl

Ingredients

List		Weight-1	Weight-2	Weight-3	Weight-4	Weight-5
For Kadhai Chicken	Weight Limit	0.1 kg	0.2 kg	0.3 kg	0.4 kg	0.5 kg
	Boneless chicken	100 g	200 g	300 g	400 g	500 g
	Oil	1 tbsp	2 tbsps	3 tbsps	3 tbsps	3.5 tbsps
	Methidana	0.25 tsp	0.25 tsp	1 tsp	1 tsp	1 tsp
	Onion slices	1 no.	2 nos.	3 nos.	3 nos.	3.5 nos.
	Chopped garlic	1 tsp	2 tsps	3 tsps	4 tsps	5 tsps
	Dhania powder, red chilli powder salt	As per taste				
	Tomato puree	0.25 cup	0.5 cup	1 cup	1.5 cups	1.5 cups
	Hara dhania	A few sprigs				
	Capsicum	1 no.	1.5 nos.	2 nos.	2 nos.	2 nos.
	Ginger (finely sliced)	1 tbsp	2 tbsps	3 tbsps	4 tbsps	4.5 tbsps
	Cream	For garnishing				

Instructions

1) In Microwave safe bowl add oil, methidana, onion slices, garlic, dhania powder, red chilli powder, chicken and salt. Cover. select menu and weight, then press start.
2) When beeps, mix well and add tomato puree, hara dhana, capsicum and ginger. Mix well and cover and press start. Stand for 3 minutes.
3) Add cream. Mix well. Serve hot.

I C 19: Kofta Curry

- **Weight Limit**: 0.1 ~ 0.3 kg
- **Utensil**: Microwave safe flat glass dish, Microwave safe bowl

Ingredients

List		Weight-1	Weight-2	Weight-3
For Kofta Curry	Weight Limit	0.1 kg	0.2 kg	0.3 kg
	Grated Lauki	100 g	200 g	300 g
	Besan	1 tbsp	2 tbsps	3 tbsps
	Chopped Onion	0.5 cup	1 cup	1 cup
	Tomato puree	0.25 cup	0.5 cup	1 cup
	Chopped garlic	1 tsp	1.5 tsps	2 tsps
	Chopped Ginger	1 tsp	1.5 tsps	2 tsps
	Coriander power, haldi, garam masala, red chilli powder, jeera, salt	As per taste		
	Oil	0.5 tbsp	1 tbsp	1.5 tbsps
	Water	0.5 cup	1 cup	1.5 cups
	Lemon juice	As per taste		

Instructions

1) In a bowl mix grated lauki, besan, salt and haldi together. Mix well and prepare balls of medium size out of the mixture.
2) Grease a Microwave safe flat glass dish and keep the koftas on it select menu and weight, then press start.
3) When beeps, remove in a Microwave safe bowl add oil, jeera, onion, garlic and ginger and press start.
4) When beeps, mix well, add tomato puree, coriander power, garam masala, red chilli powder, salt, water. Add koftas and press start. Stand for 5 minutes. Squeeze lemon juice and serve.

I C20: Egg Curry

- **Weight Limit**: 0.1 ~ 0.3 kg
- **Utensil**: Microwave safe bowl

Ingredients

List		Weight-1	Weight-2	Weight-3
For Egg Curry	Weight Limit	0.1 kg	0.2 kg	0.3 kg
	Boiled eggs	2 nos.	4 nos.	6 nos.
	Onions (chopped)	2 nos.	3 nos.	4 nos.
	Green chilli	1 no.	2 nos.	3 nos.
	Garlic (pods)	6-7 nos.	8-10 nos.	10-12 nos.
	Ginger (chopped)	1 tbsp	1.5 tbsps	2 tbsps
	Tomato puree	3 tbsps	5 tbsps	6 tbsps
	Water	0.5 cup	1 cup	1.5 cups
	Green peas (shelled)	0.25 cup	0.5 cup	1 cup
	Salt, red chilli powder, garam masala, turmeric powder, dhania powder	As per taste		
	Oil	2 tbsps	3 tbsps	3 tbsps
	Coriander leaves	A few sprigs		

Instructions

1) Put chopped onions, green chilli, garlic, ginger in a spice blender and make paste adding 1 tbsp water.
2) In a Microwave safe bowl take oil and add the paste. Mix well. select menu and weight, then press start.
3) When beeps, stir and add tomato puree, peas, water and all the spices. Mix well and press start.
4) When beeps, stir and add boiled eggs (each cut into 2), add some water if required. Mix well and press start. Garnish with fresh coriander leaves and serve hot.

I C2 I: Jhinga Matar Curry

- **Weight Limit**: 0.2 - 0.4 kg
- **Utensil**: Microwave safe bowl

Ingredients

List		Weight-1	Weight-2	Weight-3
For Jhinga Matar Curry	Weight Limit	0.2 kg	0.3 kg	0.4 kg
	Prawns (deviened and cleaned)	50 g	100 g	150 g
	Peas (shelled)	0.5 cup	1 cup	1 cup
	Water	0.25 cup	0.5 cup	1 cup
	Salt, red chilli power, garam masala	As per taste		
	Oil	1 tbsp	1.5 tbsps	2 tbsps
For Paste	Onions	1 no.	2 nos.	2.5 nos.
	Green chilli	1 no.	2 nos.	2 nos.
	Coriander powder, turmeric powder	As per taste		
	Ginger (chopped)	1 tsp	1.5 tsps	2 tsps

Instructions

1) Grind all together onions, green chilli, ginger, coriander powder and turmeric powder without adding any water and make a paste.
2) In a Microwave safe bowl take oil and paste. Mix well. select menu and weight, then press start.
3) When beeps, mix and add shelled peas, prawns, all other spices and water. Mix well and cover and press start.
4) When beeps, remove lid and stir well. Press start. Serve hot with steamed rice.

I C22: Dum Tangri

- **Weight Limit**: 0.6 kg
- **Utensil**: Microwave safe glass bowl, High rack

Ingredients

List		Weight
For Dum Tangri	Weight Limit	0.6 kg
	Chicken legs	5 nos.

List		Weight
For Marinade	Hung curd	4 tbsps
	Fresh cream	1 tbsp
	Ginger-garlic paste	1 tsp
	Oil	0.5 tbsp
	Tandoori chicken masala	1 tbsp
	Kasoori methi	As required
	Salt, red chilli powder, garam masala, black pepper powder	As per taste
For Gravy	Fresh tomato paste	5 tbsps
	Onion paste	5 tbsps
	Tomato puree	3 tbsps
	Ginger-garlic paste	1 tsp
	Oil	2 tbsps
	Fresh coriander leaves (chopped)	As required
	Salt, red chilli power, garam masala, dhaniya powder	As per taste

Instructions

1) Pre-prepare the gravy : Add all ingredient of gravy in Microwave safe glass bowl and microwave at 100% for 5 minutes. Keep aside.
2) Take chicken legs, wash, clean and pat dry them with kitchen towel. Make cuts on legs with a sharp knife and keep aside.
3) In a bowl take all the ingredients of marinade and mix to a thick paste. Apply the marinade on chicken legs all over and inside the cuts as well. Keep covered inside the refrigerator for at least half an hour.
4) After marination is done, keep the marinated chicken legs on high rack. Keep high rack with chicken legs in the microwave. Select menu and press start.
5) When beeps, turn the chicken legs and press start.
6) When beeps, remove chicken legs from high rack and add chicken legs toprepared gravy and coverwith cling film and press start.Stand for 5 minutes.
7) Mix well and serve hot with butter naan or laccha parantha..

C23: Makki Korma

- **Weight Limit**: 0.1 ~ 0.3 kg
- **Utensil**: Microwave safe bowl

Ingredients

List		Weight-1	Weight-2	Weight-3
For Makki Korma	Weight Limit	0.1 kg	0.2 kg	0.3 kg
	Corns	100 g	200 g	300 g
	Peas	0.25 cup	0.5 cup	0.5 cup
	Onion (chopped)	1 no.	2 nos.	2 nos.
	Tomato (chopped)	1 no.	2 nos.	2 nos.
	Green chilli (chopped)	1 no.	2 nos.	3 nos.
	Beaten curd	4 tbsps	6 tbsps	8 tbsp
	Water (for boiling)	0.5 cup	1 cup	1 cup
	Water (for cooking)	0.25 cup	0.5 cup	1 cup
	Salt, red chilli power, turmeric powder, garam masala	As per taste		
	Oil	0.5 tbsp	1 tbsp	1.5 tbsps

Instructions

1) In a Microwave safe glass bowl put corns, peas, water (for boiling) and stir. select menu and weight, then press start.
2) When beeps, remove and strain the corns and peas in a strainer and keep aside. In the same glass bowl add put oil, chopped onion, tomato and green chilli. Mix well and press start.
3) When beeps, add corns and peas, water (for cooking), add all spices, beaten curd and mix well. Press start. Give standing time of 5-10 minutes and serve hot.

I C24: Litti

- **Weight Limit**: 6Pcs
- **Utensil**: Low rack, Multicook tawa

Ingredients

List		Weight
For Dough	Weight Limit	6 pcs
	Whole wheat flour	1 cup
	Curd	0.25 cup
	Desi ghee	2 tbsps
	Ajwain	1 tsp
	Salt	As per taste
	Baking soda	A pinch
	Water(to knead dough)	0.25 cup
For stuffing	Sattu	0.5 cup
	Chopped onion	0.5 cup
	Chopped coriander	0.5 cup
	Chopped ginger	1 tsp
	Mustard oil	1 tbsp
	Red chilli pickle masala	1 tbsp
	Lemon juice	1 tsp
	Salt, red chilli powder,garam masala	As per taste

Instructions

1) In a bowl mix all the ingredients of dough except water and mix well with hands. Now add water and knead a soft dough. Cover and keep aside for 10-15 minutes.
2) In another bowl take all the ingredients of stuffing and mix well. If the stuffing is too dry, then add 1 or 2 cups(just enough to mix all the ingredients) and mix well. The stuffing should not be wet.
3) Divide the dough into 6 equal medium sized balls(approx. 45g each). Now fill the stuffing(1-2 tbsps.) and make round shape balls.
4) Keep multicook tawa on low rack and keep the tawa and rack inside microwave. Select category and press start. (Pre heat)
5) When beeps , keep the prepared balls on tawa and keep tawa on low rack and press start.
6) When beeps, change over the slide. Press start. Dip the hot Litti in melted ghee and serve hot with chokha.

C25: Chokha

- **Weight Limit**: 0.3 kg

- **Utensil**: Microwave safe glass bowl and Multicook Tawa and High rack

Ingredients

List		Weight
For Chokha	Weight Limit	0.3 kg
	Brinjal(Peeled and chopped)	300 g
	Onion(Chopped)	1 no.
	Tomato(deseeded and cut into pieces)	3 nos.
	Green chilli chopped	2 Nos.
	Coriander leaves(Chopped)	2 tbsps
	Ginger chopped	1 tsp
	Mustard Oil	0.5 tbsp
	Salt, Red chilli powder	As per taste

Instructions

1) In a Microwave safe glass bowl take peeled and chopped brinjal pieces. Sprinkle some water Select category and press start.
2) When beeps, remove Microwave glass bowl from the microwave. Mash the cooked brinjal with the back of the spoon/ladle and keep aside.
3) Take tomato pieces and keep on tawa. Keep tawa and high rack inside the Microwave and press start.
4) When cooking ends, add grilled tomatoes to the mashed brinjal. Add all the spices, mustard oil, chopped onions and green chillies, coriander leaves, and mix very well and mash a little. Serve chokha with freshly made litti.

I C26: Methi Aloo

- **Weight Limit**: 0.2 ~ 0.4 kg
- **Utensil**: Microwave safe bowl

Ingredients

List		Weight-1	Weight-2	Weight-3
For Methi Aloo	Weight Limit	0.2 kg	0.3 kg	0.4 kg
	Methi leaves (chopped)	2 cups	3 cups	4 cups
	Big size potato (cut in pieces)	1 no.	2 nos.	3 nos.
	Tomato (chopped)	1 no.	2 nos.	3 nos.
	Oil	1 tbsp	1.5 tbsps	2 tbsps
	Green chilli (chopped)	1 no.	2 nos.	2 nos.
	Salt, red chilli powder, haldi, garam masala	As per taste		

Instructions

1) In a Microwave safe bowl take oil, chopped green chilli and chopped tomato. Mix well. select menu and weight, then press start.
2) When beeps, mix and add cut potatoes. Sprinkle little water on top. Cover and press start.
3) When beeps, remove cover. Add chopped methi leaves and all the spices. Mix well and cover. Press start. Give standing time for 5 minutes. Serve hot with chappati or parantha.

Sweet Corner

SC 1: Suji Halwa

- **Weight Limit**: 0.1 ~ 0.3 kg
- **Utensil**: Microwave safe glass bowl

Ingredients

List		Weight-1	Weight-2	Weight-3
For Suji Halwa	Weight Limit	0.1 kg	0.2 kg	0.3 kg
	Suji	100 g	200 g	300 g
	Ghee (melted)	2 tbsps	3 tbsps	4 tbsps
	Water	300 ml	600 ml	900 ml
	Sugar	100 g	200g	300 g
	Cashewnuts, Kishmish, Kesar, Elaichi Powder	As per your taste		

Instructions

1) In microwave safe glass bowl take suji, add ghee mix it together, select menu, then press start.
2) When beeps, stir it. Allow to cool. Add sugar and 0.5 qty. of water (For 0.1kg add 150 mL). Mix well, then press start.
3) When beeps, add remaining 0.5 water, sugar, cashewnuts, kishmish, kesar, elaichi powder, mix it well, then press start. Serve hot.

SC2: Besan Ladoo

- **Weight Limit**: 0.1 ~ 0.3 kg
- **Utensil**: Microwave safe flat glass dish

Ingredients

List		Weight-1	Weight-2	Weight-3
For Besan Ladoo	Weight Limit	0.1 kg	0.2 kg	0.3 kg
	Besan	100 g	200 g	300 g
	Ghee (melted)	3 tbsps	5 tbsps	7 tbsp
	Powdered Sugar	50 g	100 g	150 g
	Elaichi Powder	0.5 tbsp	1 tbsp	1 tbsp

Instructions

1) In Microwave safe flat glass dish take besan and ghee. Select menu and weight, then press start.
2) When beeps, stir it, then press start.
3) Again when beeps, stir it, then press start.
4) Allow to cool. Add powdered sugar and elaichi powder. Mix it well and make a ladoo of same size.

NOTE

- For binding the ladoo use ghee

SC3: Shahi Tukda

- **Weight Limit**: 0.1 ~ 0.4 kg
- **Utensil**: Microwave safe flat glass dish, Low rack

Ingredients

List		Weight-1	Weight-2	Weight-3	Weight-4
For Shahi Tukda	Weight Limit	0.1 kg	0.2 kg	0.3 kg	0.4 kg
	Bread Slices	1 slice	2 slices	3 slices	4 slices
	Condensed Milk (Milkmaid)	50 ml	100 ml	150 ml	200 ml
	Milk	50 ml	100 ml	125 ml	150 ml
	Sugar	1 tbsp	2 tbsps	3 tbsps	4 tbsps
	Badam, Pista Pieces	2 tbsps	3 tbsps	4 tbsps	5 tbsps
	Kesar-Elaichi Powder	As per your taste			

Instructions

1) Arrange bread slices on low rack. Select menu and weight, then press start.
2) When beeps, turn slices press start.
3) When beeps, mix Condensed Milk (Milkmaid), milk, sugar, dry fruits and kesar elaichi powder in Microwave Safe Flat Glass Dish. Pour the mixture on slices, then press start. Serve hot.

SC4: Kheer

- **Weight Limit**: 0.5 kg
- **Utensil**: Microwave safe bowl

Ingredients

List		Weight
For Kheer	Weight Limit	0.5 kg
	Milk	500 ml
	Condensed Milk (Milkmaid)	400 ml
	Seviyaan (roasted)	80 g
	Badam, Pista Pieces	5 tbsps
	Kesar and Elaichi Powder	As per taste

Instructions

1) In Microwave Safe Glass Bowl add milk, Condensed Milk (Milkmaid) and mix well. Select menu, then press start.
2) When beeps, add badam, pista pieces, kesar rlaichi powder and seviyaan. Mix well, then press start..
3) When beeps, mix it well. Add more milk (if required), then press start. Stand for 5 minutes. Serve hot or chilled.

NOTE

- The bowl should be filled at 1/4 level of the total volume.

5C5: Mysore Pak

- **Weight Limit**: 0.1 ~ 0.3 kg
- **Utensil**: Microwave safe flat glass dish, microwave safe glass bowl

Ingredients

List		Weight-1	Weight-2	Weight-3
For Mysore Pak	Weight Limit	0.1 kg	0.2 kg	0.3 kg
	Besan	100 g	200 g	300 g
	Sugar	100 g	200 g	300 g
	Ghee	0.5 cup	1 cup	1 cup
	Water	100 ml	200 ml	250 ml
	Cardamom powder	1 tsp	1 tsp	1.5 tsps

Instructions

1) In a Microwave safe flat glass dish add besan. Select menu and weight, then press start.
2) When beeps, remove and in another Microwave safe glass bowl add water and sugar. Press start.

3) When beeps, add sugar to the besan stirring continuously. After this add melted ghee, stirring continuously. Pour the mixture in a Microwave safe flat glass dish. Press start.
4) Allow to cool. Cut it into square shape pieces and serve.

   Note: For stirring take the help of one more person.

SC6: Nariyal Burfi

- **Weight Limit**: 0.1 ~ 0.3 kg
- **Utensil**: Microwave safe bowl

Ingredients

List		Weight-1	Weight-2	Weight-3
For Nariyal Burfi	Weight Limit	0.1 kg	0.2 kg	0.3 kg
	Grated coconut	100 g	200 g	300 g
	Condensed Milk (Milkmaid)	0.5 cup	1 cup	1.5 cups
	Milk Powder	3 tbsps	4 tbsps	5 tbsps
	Ghee	1 tbsp	2 tbsps	3 tbsps
	Elaichi powder	1 tbsp	2 tbsps	3 tbsps

Instructions

1) In a Microwave safe bowl add ghee and fresh grated coconut. Mix well.
2) Select menu and weight, then press start
3) When beeps, add Condensed Milk (Milkmaid)), milk powder, elaichi powder, then press start.
4) When beeps, remove and spread the mixture onto a greased thali and allow to set for 1 hour. Cut into rectangles and store in a air tight container.

SC7: Sandesh

- **Weight Limit**: 0.2 ~ 0.4 kg
- **Utensil**: Microwave safe bowl

Ingredients

List		Weight-2	Weight-3	Weight-4
For Sandesh	Weight Limit	0.2 kg	0.3 kg	0.4 kg
	Paneer (grated)	200 g	300 g	400 g
	Condensed Milk (Milkmaid)	50 g	75 g	100 g
	Rose water	1 tbsp	1.5 tbsps	2 tbsps
	Elaichi seeds	0.5 tbsp	1 tbsp	1.5 tbsps
	Chopped pista	A few		
	Khoa (mashed)	100 g	150 g	200 g

Instructions

1) In a Microwave safe bowl add grated paneer, khoa, rose water and Condensed Milk (Milkmaid). Mix well.
2) Select menu and weight, then press start.
3) When beeps, stir well, then press start.
4) Allow to cool. Hang in Muslin cloth for 20 minutes if it is too wet. Make balls out of the mixture and roll them in elaichi powder and chopped pista. Refrigerate till set.

5C8: Shahi Rabdi

- **Weight Limit**: 0.3 kg
- **Utensil**: Microwave safe bowl

Ingredients

List		Weight
For Shahi Rabdi	Weight limit	0.3 kg
	Milk	1 cup
	Grated Paneer	1 cup
	Condensed milk	0.5 cup
	Desi Ghee	1 tbsp
	Elaichi Powder	0.25 cup
	Saffron	A few strands
	Rose Essence	A few drops
	Chopped pistachios	1 tbsp
	Chopped almonds (skin removed)	2 tbsps

Instructions

1) Dissolve strands of saffron in 2 tbsps lukewarm milk.
2) In a Microwave safe bowl, put all the ingredients of rabdi except chopped pistachios. Mix well.
3) Keep the bowl in Microwave. Select menu, then press start.
4) Serve chilled garnished with chopped pistachios.

SC9: Payasam

- **Weight Limit**: 0.1 ~ 0.3 kg
- **Utensil**: Microwave safe bowl

Ingredients

List		Weight-1	Weight-2	Weight-3
For Payasam	Weight Limit	0.1 kg	0.2 kg	0.3 kg
	Broken rice (soaked for 2 hour)	100 g	200 g	300 g
	Milk and Water	300 ml	500 ml	700 ml
	Sugar	75 g	150 g	200 g
	Kesar, elaichi powder dry fruits	As per taste		
	Ghee	1 tbsp	1.5 tbsps	2 tbsps

Instructions

1) In a Microwave safe bowl take ghee, soaked rice, milk, sugar and water and cover it.
2) Select menu and weight, then press start.
3) When beeps, add more milk, dry fruits, kesar, elaichi powder. Mix well, then press start. Stand for 5 minutes. Sprinkle kewada jal on it. Serve hot or chilled.

SC 10: Kaddu Kheer

- **Weight Limit**: 0.5 kg
- **Utensil**: Microwave safe glass bowl

Ingredients

List		Weight
For Kaddu Kheer	Weight Limit	0.5 kg
	Milk	300 ml
	Grated Kaddu	200 g
	Condensed Milk (Milkmaid)	150 g
	Dry Fruits (Kaju, Kishmish, Pista)	As required

Instructions

1) In a Microwave safe glass bowl add milk and Condensed Milk (Milkmaid), grated kaddu. Select menu, then press start.
2) When beeps, mix well. Press start.
3) When beeps, mix well and add dry fruits. Press start. Serve it chilled or hot.

SC 11: Seviyan Zarda

- **Weight Limit**: 0.2 kg
- **Utensil**: Microwave safe glass bowl

Ingredients

List		Weight
For Seviyan Zarda	Weight Limit	0.2 kg
	Roasted Seviyan	200 g
	Sugar	5 tbsps
	Water	2 cups
	Rose essence	A few drops
	Almonds	A few
	Chopped pista	A few
	Elaichi powder	0.5 tbsp
	Ghee	1.5 tbsps

Instructions

1) In a Microwave safe glass bowl add sugar and water. Select menu, then press start.
2) When beeps, add rose essence , cardamom powder, seviyan to the bowl. Press start. Give standing time of 3 minutes. Garnish with almonds and pista and serve.

SC 12: Burfi

- **Weight Limit**: 0.3 kg
- **Utensil**: Microwave safe flat glass dish

Ingredients

List		Weight
For Burfi	Weight Limit	0.3 kg
	Milk powder	100 g
	Condensed Milk (Milkmaid)	100 ml
	Cream	100 ml
	Chopped almonds and pistas	As required

Instructions

1) In a bowl mix milk powder, corn flour, Condensed Milk (Milkmaid) and cream. Beat well till smooth..
2) Pour the mixture in a Microwave safe flat glass dish. Select menu, then press start.
3) When beeps, mix well (remove lumps if formed). Press start.
4) When beeps, mix well, then press start.
5) Remove, allow to cool and refrigerate till set. After setting cut into pieces and and sprinkle chopped almonds and pistas and serve

SC 12: Burfi

- **Weight Limit**: 0.3 kg
- **Utensil**: Microwave safe flat glass dish

Ingredients

List		Weight
For Burfi	Weight Limit	0.3 kg
	Milk powder	100g
	Condensed Milk (Milkmaid)	100 ml
	Cream	100 ml
	Chopped almonds and pistas	As required

Instructions

1) In a bowl mix milk powder, corn flour, Condensed Milk (Milkmaid) and cream. Beat well till smooth..
2) Pour the mixture in a Microwave safe flat glass dish. Select menu, then press start.
3) When beeps, mix well (remove lumps if formed). Press start.
4) When beeps, mix well, then press start.
5) Remove, allow to cool and refrigerate till set. After setting cut into pieces and and sprinkle chopped almonds and pistas and serve

SC 13: Kalakand

- **Weight Limit**: 0.1 ~ 0.3 kg
- **Utensil**: Microwave safe bowl

Ingredients

List		Weight-1	Weight-2	Weight-3
For Kalakand	Weight Limit	0.1 kg	0.2 kg	0.3 kg
	Condensed Milk (Milkmaid)	50 ml	100 ml	200 ml
	Milk Powder	2 tbsps	3 tbsps	4 tbsps
	Cornflour	0.5 tbsp	1 tbsp	1 tbsp
	Elaichi Powder	0.5 tsp	1 tsp	1 tsp
	Grated Paneer	100 g	200 g	300 g

Instructions

1) In Microwave Safe Bowl take grated paneer, Condensed Milk (Milkmaid), milk powder, cornflour, Elaichi powder. Mix well, select menu and weight, then press start.

2) When beeps, mix it again, then press start.
3) When set cut into pieces. Garnish with dry fruits.

SC 14: Kaju Burfi

- **Weight Limit**: 0.4 Kg
- **Utensil**: Microwave safe glass bowl

Ingredients

List		Weight
For Kaju Burfi	Weight Limit	0.4 kg
	Kaju	2 cups
	Powdered sugar	1.25 cup
	Sugar	0.5 cup
	Water	0.5 cup

Instructions

1) Take kaju in a spice grinder and make a fine powder and keep aside.
2) In a Microwave safe glass bowl take powdered sugar and water. Stir very well. Select category and press start.
3) When beeps, stir very well and dissolve all the sugar. Add kaju powder and stir till all the lumps are removed. Keep stirring till the paste becomes like a dough.(ball formation stage)
4) Grease the kitchen slab(Marble top) a little with ghee. Take the dough and roll out to 1" thickness carefully. Cut the kaju burfi in desired square or diamond shape and decorate with vark and serve.

SC 15: Badam Halwa

- **Weight Limit**: 0.1 ~ 0.3 kg
- **Utensil**: Microwave safe glass bowl

Ingredients

List		Weight-1	Weight-2	Weight-3
For Curd Rice	Weight Limit	0.1 kg	0.2 kg	0.3 kg
	Badam (soaked in hot water for 1 hour)	0.5 cup	1 cup	1.5 cups
	Milk (for making paste)	0.5 cup	1 cup	1 cup
	Milk (for cooking)	0.5 cup	0.75 cup	1 cup
	Sugar	3 tbsps	5 tbsps	7 tbsp
	Desi ghee	2 tbsps	3 tbsps	4 tbsps
	Slivered almonds (for garnishing)	A few		

Instructions

1) Remove the skin from badam and grind them to a fine paste adding milk.Take out this paste in a microwave safe glass bowl.
2) Add desi ghee to the paste and mix well. Select menu and weight, then press start.
3) When beeps, stir very well and again press start.
4) When beeps, stir very well. Add sugar and milk (for cooking). Again mix well, then press start. Give standing time of 5-6 minutes and mix well. Garnish with slivered almonds and serve badam halwa hot.

Rice Delight

rd 1: Chicken Biryani

- **Weight Limit**: 0.1 ~ 0.5 kg
- **Utensil**: Microwave safe bowl

Ingredients

List		Weight-1	Weight-2	Weight-3	Weight-4	Weight-5
For Chicken Biryani	Weight Limit	0.1 kg	0.2 kg	0.3 kg	0.4 kg	0.5 kg
	Basmati rice (soaked for 1 hour)	100 g	200 g	300 g	400 g	500 g
	Boneless chicken	100 g	200 g	300 g	400 g	500 g

List		Weight-1	Weight-2	Weight-3	Weight-4	Weight-5
For Marinade	Hung curd	0.5 cup	1 cup	1.5 cups	2 cups	2.5 cups
	Tomato puree	2 tbsps	3 tbsps	4 tbsps	5 tbsps	6 tbsps
	Ginger garlic paste	1 tbsp	1.5 tbsps	1.5 tbsps	2 tbsps	2 tbsps
	Salt, garam masala, coriander powder, red chilli powder, turmeric powder	As per taste				
	Oil	1 tbsp	1.5 tbsps	2 tbsps	2.5 tbsps	3 tbsps
	Onion	0.5 cup	1 cup	1 cup	1.5 cups	1.5 cups
	Salt	If required				
	Coriander leaves	A few springs				
	Water	200 ml	400 ml	600 ml	650 ml	750 ml

Instructions

1) Marinade the chicken and keep it in refrigerator for 1 hour.
2) In a Microwave safe bowl add oil, chopped onions and marinated chicken and cover. Select category and weight, then press start.
3) When beeps, mix well, add rice, salt (if required), coriander leaves, water. Cover and press start. Stand for 5 minutes. Serve hot.

rd2: Gosht Dum Biryani

- **Weight Limit**: 0.1 ~ 0.5 kg
- **Utensil**: Microwave safe bowl

Ingredients

List		Weight-1	Weight-2	Weight-3	Weight-4	Weight-5
For Gosht Dum Biryani	Weight Limit	0.1 kg	0.2 kg	0.3 kg	0.4 kg	0.5 kg
	Basmati rice (soaked for 1 hour)	100 g	200 g	300 g	400 g	500 g
	Boneless mutton	100 g	200 g	300 g	400 g	500 g
	Oil	1 tbsp	1.5 tbsps	2 tbsps	2.5 tbsps	3 tbsps
	Chopped onion	0.5 cup	1 cup	1 cup	1.5 cups	1.5 cups
	Ginger garlic paste	1 tbsp	1.5 tbsps	1.5 tbsps	2 tbsps	2 tbsps
	Jeera, laung, tej patta, salt, red chilli powder, garam masala	As per taste				
	Water	200 ml	400 ml	600 ml	650 ml	750 ml

Instructions

1) In a Microwave safe bowl add oil, jeera, laung, tej patta onion, ginger garlic paste, mutton and cover. Select category and weight, then press start.
2) When beeps, mix well, add rice, water, salt, red chilli powder, garam masala and cover. Press start. Stand for 5 minutes. Serve hot.

rd3: Malabar Biryani

- **Weight Limit**: 0.1 ~ 0.5 kg
- **Utensil**: Microwave safe bowl

Ingredients

List		Weight-1	Weight-2	Weight-3	Weight-4	Weight-5
For Malabar Biryani	Weight Limit	0.1 kg	0.2 kg	0.3 kg	0.4 kg	0.5 kg
	Basmati rice (soaked for 1 hour)	100 g	200 g	300 g	400 g	500 g
	Boneless chicken	100 g	200 g	300 g	400 g	500 g
For Marinade	Salt, red chilli powder, turmeric powder	As per taste				
	Oil	1 tbsp	1.5 tbsps	2 tbsps	2.5 tbsps	3 tbsps
	Salt, biryani masala	As per taste				
	Curd	1 tbsp	1.5 tbsps	2 tbsps	2.5 tbsps	3 tbsps
	Sliced tomato	1 no.	1 no.	2 nos.	2 nos.	3 nos.
	Sliced onion	1 no.	1 no.	2 nos.	2 nos.	3 nos.
	Water	200 ml	400 ml	600 ml	650 ml	750 ml

Instructions

1) Marinade the chicken and refrigerate it for 1 hour.
2) In a Microwave safe bowl add oil, onion, chopped coriander and mint leaves, biryani masala and salt. Mix, Select category and weight, then press start.
3) When beeps, remove the bowl and in another Microwave safe bowl add soaked rice, water, tomato, curd, mix and cover. Press start.
4) When beeps, add the marinated chicken to the first bowl. Cover and press start. Stand for 5 minutes. Serve hot.

rd4: Pineapple Fried Rice

- **Weight Limit**: 0.1 ~ 0.5 kg
- **Utensil**: Microwave safe bowl

Ingredients

List		Weight-1	Weight-2	Weight-3	Weight-4	Weight-5
For Pineapple Fried Rice	Weight Limit	0.1 kg	0.2 kg	0.3 kg	0.4 kg	0.5 kg
	Basmati rice (soaked for 1 hour)	100 g	200 g	300 g	400 g	500 g
	Oil	1 tbsp	1.5 tbsps	2 tbsps	2.5 tbsps	3 tbsps
	Mix veg - Peas, french beans, carrots, capsicum	0.5 cup	1 cup	1.5 cups	2 cups	2.5 cups
	Pineapple (chopped)	0.5 cup	1 cup	1 cup	1.5 cups	2 cups
	Red chilli powder, chilli sauce, soya sauce	As per taste				
	Water	200 ml	400 ml	600 ml	650 ml	750 ml

Instructions

1) In a Microwave safe bowl add oil, mix vegetables, ajinomoto, red chilli powder, soy sauce, chilli sauce. Mix and Select category and weight, then press start.
2) When beeps, remove, in another Microwave safe bowl add rice and water and press start.
3) When beeps, add the boiled rice to the vegetables, add pineapple pieces. Mix and press start. Stand for 5 minutes.

rd5: Veg Pulao

- **Weight Limit**: 0.1 ~ 0.5 kg
- **Utensil**: Microwave safe bowl

Ingredients

List		Weight-1	Weight-2	Weight-3	Weight-4	Weight-5
For Veg Pulao	Weight Limit	0.1 kg	0.2 kg	0.3 kg	0.4 kg	0.5 kg
	Basmati rice (soaked for 1 hour)	100 g	200 g	300 g	400 g	500 g
	Water	200 ml	400 ml	600 ml	650 ml	750 ml
	Oil	1 tbsp	1.5 tbsps	2 tbsps	2.5 tbsps	3 tbsps
	Jeera, laung, tej patta, salt, garam masala, red chilli powder	As per taste				
	Mix veg - Gobhi, matar, gajar, french beans etc.	0.5 cup	1 cup	1.5 cups	2 cups	2.5 cups

Instructions

1) In a Microwave safe bowl add oil, jeera, laung, tej patta and mix vegetables.
2) Select category and weight, then press start.
3) When beeps, mix well and add rice, water, salt, garam masala, red chilli powder. Press start. Mix well. Stand for 5 minutes.

rd6: Veg Tahiri

- **Weight Limit**: 0.1 ~ 0.5 kg
- **Utensil**: Microwave safe bowl

Ingredients

List		Weight-1	Weight-2	Weight-3	Weight-4	Weight-5
For Veg Tahiri	Weight Limit	0.1 kg	0.2 kg	0.3 kg	0.4 kg	0.5 kg
	Basmati rice (soaked for 1 hour)	100 g	200 g	300 g	400 g	500 g
	Water	200 ml	400 ml	600 ml	650 ml	750 ml
	Oil	1 tbsp	1.5 tbsps	2 tbsps	2.5 tbsps	3 tbsps
	Jeera, laung, tej patta, salt, garam masala, haldi, red chilli powder	As per taste				
	Mix veg - Gobhi, matar, gajar, tomato, potato etc.	0.5 cup	1 cup	1.5 cups	2 cups	2.5 cups

Instructions

1) In a Microwave safe bowl add oil, jeera, laung, tej patta and mix vegetables.
2) Select category and weight, then press start.
3) When beeps, mix well and add rice, water, salt, garam masala, haldi, red chilli powder. Press start. Mix well. Stand for 5 minutes. Serve hot.

rd7: Pepper Rice

- **Weight Limit**: 0.1 ~ 0.5 kg
- **Utensil**: Microwave safe bowl

Ingredients

List		Weight-1	Weight-2	Weight-3	Weight-4	Weight-5
For Pepper Rice	Weight Limit	0.1 kg	0.2 kg	0.3 kg	0.4 kg	0.5 kg
	Soaked Rice (2 hours)	100 g	200 g	300 g	400 g	500 g
	Water	200 ml	400 ml	600 ml	650 ml	750 ml
	Dry coconut	2 tbsps	3 tbsps	4 tbsps	4.5 tbsps	5 tbsps
	Green chilli (Chopped)	2 nos.	3 nos.	4 nos.	5 nos.	6 nos.
	Garlic (Chopped)	2 cloves	3 cloves	4 cloves	5 cloves	6 cloves
	Ghee	1 tbsp	2 tbsps	2.5 tbsps	3 tbsps	3.5 tbsps
	Salt	As per taste				
	Black pepper powder	As per taste				
For Seasoning	Mustard seeds	0.5 tsp	1 tsp	1.5 tsps	2 tsps	2.5 tsps
	Black g dal	0.5 tsp	1 tsp	1.5 tsps	2 tsps	2.5 tsps
	Bengal g dal	0.5 tsp	1 tsp	1.5 tsps	2 tsps	2.5 tsps
	Curry leaves	A few leaves				
	Dry Red Chilli	1 no.	2 nos.	3 nos.	4 nos.	5 nos.
	Oil	1 tbsp	2 tbsps	3 tbsps	3.5 tbsps	4 tbsps

Instructions

1) In a Microwave safe bowl add oil, dry red chilli, green chilli, chopped garlic, mustard seeds, black g dal, Bengal g dal, curry leaves. Select category and weight, then press start.
2) When beeps, add soaked rice, water, ghee, salt, black pepper powder. Mix well and press start. Stand for 5 minutes. Add grated coconut and serve hot.

rd8: Zafrani Pulao

- **Weight Limit**: 0.1 ~ 0.5 kg
- **Utensil**: Microwave safe bowl

Ingredients

List		Weight-1	Weight-2	Weight-3	Weight-4	Weight-5
For Zafrani Pulao	Weight Limit	0.1 kg	0.2 kg	0.3 kg	0.4 kg	0.5 kg
	Basmati rice	100 g	200 g	300 g	400 g	500 g
	Melted ghee	1 tbsp	2 tbsps	3 tbsps	4 tbsps	5 tbsps
	Nutmeg powder, cardamon powder	As per taste				
	Sugar	1 tbsp	1.5 tbsps	2 tbsps	2.5 tbsps	3 tbsps
	Saffron (Kesar)	A pinch				
	Warm milk	1 tbsp	2 tbsps	3 tbsps	4 tbsps	5 tbsps
	Water	150 ml	300 ml	350 ml	650 ml	750 ml
	Kishmish, Kaju	As per required				

Instructions

1) In a Microwave safe bowl add ghee and rice. Mix well. Select category and weight, then press start.
2) When beeps, mix well add nutmeg powder, cardamom powder, kishmish, kaju, sugar, saffron mixed with warm milk, water. Press start. Stand for 5 minutes. Garnish with kishmish and kaju and serve.

rd9: Bengali Biryani

- **Weight Limit**: 0.1 ~ 0.5 kg
- **Utensil**: Microwave safe bowl

Ingredients

List		Weight-1	Weight-2	Weight-3	Weight-4	Weight-5
For Bengali Biryani	Weight Limit	0.1 kg	0.2 kg	0.3 kg	0.4 kg	0.5 kg
	Basmati Rice (Cooked)	100 g	200 g	300 g	400 g	500 g
	Fish (Hilsa)	250 g	350 g	450 g	550 g	650 g
	Desi Ghee	1 tbsp	2 tbsps	2 tbsps	3 tbsps	3 tbsps
	Onion (sliced)	1 no.	2 nos.	2 nos.	3 nos.	3 nos.
	Ginger-garlic paste	1 tsp	1.5 tsps	2 tsps	2.5 tsps	3 tsps
	Red chilli powder, salt, turmerics powder, cumin powder, garam masala	As per taste				
	Black pepper corns, cloves, cinnamon, bayleaf, cardamom (green)	As per requirement				
	Hung curd	2 tbsps	2.5 tbsps	3 tbsps	3.5 tbsps	4 tbsps
	Oil	1 tsp	1.5 tsps	2 tsps	2.5 tsps	3 tsps
	Water	200 ml	400 ml	600 ml	650 ml	750 ml

Instructions

1) In a bowl take hung curd, ginger-garlic paste, oil, all the spices, mix well and make a paste for marinade. Apply this marinade on fish pieces evenly keep the marinated fish in refrigerator for atleast 1-1.5 hours.

2) In a Microwave safe bowl take soaked rice, water, Select category and weight, then press start.

3) When beeps remove rice from microwave. In another Microwave safe bowl take sliced onions, desi ghee, black pepper corns, cloves, cinnamon stick, bay leaf, cardamom, mix well. Press start.

4) When beeps add the cooked onions to rice, add marinated fish pieces, salt. Mix well, cover and press start. Allow to stand for 5-10 minutes.
5) Serve hot with curd or gravy of your choice.

rd 10: Khumb Pulao

- **Weight Limit**: 0.1 ~ 0.5 kg
- **Utensil**: Microwave safe bowl

Ingredients

List		Weight-1	Weight-2	Weight-3	Weight-4	Weight-5
For Khumb Pulao	Weight Limit	0.1 kg	0.2 kg	0.3 kg	0.4 kg	0.5 kg
	Basmati Rice (Soaked)	100 g	200 g	300 g	400 g	500 g
	Sliced mushrooms	50 g	100 g	150 g	200 g	250 g
	Water	100 ml	200 ml	300 ml	325 ml	375 ml
	Milk	100 ml	200 ml	300 ml	325 ml	375 ml
	Oil	0.5 tbsp	1 tbsp	1.5 tbsps	2 tbsps	2.5 tbsps
	Chopped spring onions	2 nos.	3 nos.	4 nos.	5 nos.	6 nos.
	Chopped garlic	0.5 tbsp	1 tbsp	1.5 tbsps	2 tbsps	2.5 tbsps
	Salt, pepper	As per taste				

Instructions

1) In a Microwave safe bowl add oil, chopped garlic and spring onions. Select category and weight, then press start.
2) When beeps, mix well and add mushrooms. Press start.
3) When beeps, mix well and add rice, milk, water, salt and pepper. Press start. Stand for 3 minutes.

rd 11: Tiranga Pulao

- **Weight Limit**: 0.2 ~ 0.4 kg
- **Utensil**: Microwave safe bowl and Microwave safe glass bowl

Ingredients

List		Weight-1	Weight-2	Weight-3
For Tiranga Pulao	Weight Limit	0.3 kg	0.4 kg	0.5 kg
	Rice (soaked for 1 hour)	200 g	300 g	400 g
	Water	350 ml	500 ml	650 ml
	Salt	As per taste		
For Red Mixture	Beat root (grated)	0.5 cup	1 cup	1 cup
	Onion (sliced)	0.5 no.	1 no.	1 no.
	Oil / ghee	0.5 tbsp	1 tbsp	1 tbsp
	Salt	As per taste		
	Laung, dalchini, chhoti elaichi	As requite		
For White Mixture	Cashewnuts (broken into pieces)	1 tbsp	2 tbsps	3 tbsps
	Oil / ghee	0.5 tbsp	1 tbsp	1.5 tbsps
For Green Mixture	Mint leaves	0.5 cup	1 cup	1 cup
	Coriander leaves	0.5 cup	1 cup	1 cup
	Onion	1 no.	2 nos.	3 nos.
	Green chilli	1 no.	2 nos.	3 nos.
	Garlic paste	0.5 tsp	1 tsp	1 tsp
	Salt	As per taste		

Instructions

1) In a spice grinder take mint leaves, coriander leaves, onion (cut into pieces), green chilli and salt. Grind them and make green chutney. Keep aside for late use.
2) In a Microwave safe bowl take soaked rice and water. Add 0.25 salt. Select category and weight, then press start.
3) When beeps, remove the Microwave safe bowl and drain excess water from the rice. Divide the cooked rice into 3 equal parts. Cover them.
4) In another Microwave safe bowl add oil/ghee, grated beet root, sliced onion, laung, elaichi and salt. Mix well. Press start.
5) When beeps, remove the Microwave safe bowl and in a Microwave safe glass bowl add oil/ghee and cashewnuts. Press start.

6) Mix one portion of rice to the red mixture with a fork. Do not break the rice. Mix second portion with green chutney and third portion of rice with cashew nuts.

7) Take square / rectangular dish and arrange the red coloured layer first, white layer in the centre and green layer in the end. Serve them hot.

rd 12: Egg Biryani

- **Weight Limit**: 0.1 ~ 0.3 kg
- **Utensil**: Microwave safe bowl

Ingredients

List		Weight-1	Weight-2	Weight-3
For Egg Biryani	Weight Limit	0.1 kg	0.2 kg	0.3 kg
	Boiled eggs	2 nos.	3 nos.	4 nos.
	Rice (soaked for 1 hour)	100 g	200 g	300 g
	Water	200 ml	350 ml	500 ml
	Onions (Big sized sliced)	1 no.	2 nos.	2 nos.
	Coriander leaves (chopped)	1 tbsp	2 tbsps	3 tbsps
	Ginger-garlic paste	0.5 tsp	1 tsp	1 tsp
	Salt, red chilli powder, garam masala, dhania powder, turmeric powder	As per taste		
	Biryani masala	0.5 tsp	1 tsp	1 tsp
	Slit green chillies	1 no.	2 nos.	2 nos.

Instructions

1) In a Microwave safe bowl take soaked rice, water. Select category and weight, then press start.

2) When beeps, take out the cooked rice and keep aside. In another Microwave safe bowl take oil, chopped coriander leaves, sliced onions, biryani masala, ginger-garlic paste, slit green chilies and all the spices. Mix very well and press start.

3) When beeps, add boiled eggs (cut into 2) and boiled rice to the sliced onions. Mix well without breaking the eggs. Press start.

4) Serve egg biryani hot with plain curd or raita.

rd 13: Achari Chana Pulao

- **Weight Limit**: 0.1 ~ 0.3 kg
- **Utensil**: Microwave safe bowl

Ingredients

List		Weight-1	Weight-2	Weight-3
For Achari Chana Pulao	Weight Limit	0.1 kg	0.2 kg	0.3 kg
	Soaked rice	100 g	200 g	300 g
	Soaked and boiled kabuli chana	0.5 cup	1 cup	1.5 cups
	Sliced onions	0.5 cup	1 cup	1.5 cups
	Water	200 ml	350 ml	500 ml
	Ginger-garlic paste	0.5 tsp	1 tsp	1.5 tsps
	Desi ghee	1 tbsp	1.5 tbsps	2 tbsps
	Laung, chhoti elaichi, badi elaichi, saunf, jeera	As per requirement		
	Salt, red chilli powder, garam masala, haldi	As per taste		
	Mango pickle paste	1 tbsp	1.5 tbsps	2 tbsps
	Slit green chilli	1 no.	2 nos.	2 nos.

Instructions

1) In a Microwave safe bowl take soaked rice and water. Select category and weight, then press start.
2) When beeps, remove the rice and keep aside. In another Microwave safe bowl take desi ghee, jeera, saunf, laung, chhoti elaichi, badi elaichi, ginger-garlic paste, sliced onions and slit green chillies. Mix very well and press start.
3) When beeps, add onion-mixture to the cooked rice, also add mango pickle paste and all the spices. Mix very well and press start.
4) Serve achari chana pulao hot with fresh curd.

rd 14: Methi Rice

- **Weight Limit**: 0.1 ~ 0.3Kg
- **Utensil**: Microwave safe bowl

Ingredients

List		Weight-1	Weight-2	Weight-3
For Methi Rice	Weight Limit	0.1 kg	0.2 kg	0.3 kg
	Methi leaves (chopped)	1 cup	1.5 cups	2 cups
	Soaked rice	100 g	200 g	300 g
	Water	200 ml	350 ml	500 ml
	Onions (sliced)	1 no.	2 nos.	3 nos.
	Ginger-garlic paste	0.5 tsp	1 tsp	1.5 tsps
	Salt, red chilli powder, garam masala	As per taste		
	Oil / ghee	1.5 tbsps	2 tbsps	2.5 tbsps

Instructions

1) In a Microwave safe bowl take soaked rice and water. Select category and weight, then press start.
2) When beeps, remove the rice and keep aside. In another Microwave safe bowl take oil / ghee, chopped methi leaves, sliced onions, ginger-garlic paste. Mix well and press start.
3) When beeps, add methi leaves to cooked rice, add all the spices. Mix very well. Press start. Serve rice hot with curd or raita.

rd 15: Coconut Rice

- **Weight Limit**: 0.1 ~ 0.3Kg
- **Utensil**: Microwave safe bowl

Ingredients

List		Weight-1	Weight-2	Weight-3
For Coconut Rice	Weight Limit	0.1 kg	0.2 kg	0.3 kg
	Rice (soaked for 1 hour)	100 g	200 g	1 cup
	Coconut (grated)	0.25 cup	0.5 cup	1 cup
	Coconut milk	100 ml	200 ml	300 ml
	Water	100 ml	150 ml	200 ml
	Oil	1 tbsp	2 tbsps	2 tbsps
	Chopped cashewnuts	1 tbsp	2 tbsps	3 tbsps
	Mustard seeds	0.5 tsp	1 tsp	1 tsp
	Curry leaves	10 nos.	15 nos.	20 nos.
	Chopped green chilli	2 nos.	3 nos.	3 nos.
	Salt and pepper	As per taste		
	Finely chopped ginger	1 tsp	1.5 tsps	2 tsps
	Beaten curd	1 tbsp	2 tbsps	3 tbsps

Instructions

1) In a Microwave safe bowl take soaked rice coconut milk and water. Select category and weight, then press start.
2) When beeps, remove the rice and separate rice grains using a fork and keep aside. In another Microwave safe bowl take oil, mustard seeds, chopped cashewnuts, curry leaves, chopped ginger, chopped green chilli. Mix well and press start.
3) When beeps, add cooked rice to the tadka. Add beaten curd, grated coconut, salt and pepper. Mix very well and press start. Serve coconut rice hot with sambhar.

Chatpat Corner

CC I: Apple Tomato Chutney

- **Weight Limit**: 0.3 kg
- **Utensil**: Microwave safe glass bowl

Ingredients

List		Weight
For Apple Tomato Chutney	Weight Limit	0.3 kg
	Apple pieces	150 g
	Tomato pieces	150 g
	Green chillies, Salt, Sugar	As per your taste
	Oil	2 tbsps
For Tempering : Rai, Jeera, Hing etc.	As per requirement	

Instructions

1) In a Microwave safe glass bowl put apple, tomato, green chillies, salt and sugar and keep it in Microwave. Select menu, then press start to cook.
2) When beeps, remove, allow to cool and grind it in a mixer. In another Microwave safe glass bowl, add oil and tempering, then press start .
3) When beeps, add ground mixture, then press start . Garnish with chopped coriander.

CC2: Lemon Pickle

- **Weight Limit**: 0.3 kg
- **Utensil**: Microwave safe glass bowl

Ingredients

List		Weight
For Lemon Pickle	Weight Limit	0.3 kg
	Lemon pieces	150 g
	Sugar	150 g
	Chilli powder, Salt	As per your taste
For Tempering : Rai, Jeera, Hing etc.	As per requirement	

Instructions

1) Cut lemon and remove seeds. In Microwave safe glass bowl add lemon pieces, sugar, salt and chilli powder. Select menu, then press start . Store it in a bottle after it cools.

CC3: Mix Veg. Pickle

- **Weight Limit**: 0.3 kg
- **Utensil**: Microwave safe glass bowl

Ingredients

List		Weight
For Mix Veg. Pickle	Weight Limit	0.3 kg
	Mix Vegetable (Cauliflower, Carrot, Radish, Shalgam, Green peas)	300 g
	Lemon juice	2 tbsps
	Salt, Chilli powder, Sugar, Pickle Masala	As per your taste
	Oil	2 tbsps
For tempering : Rai, Jeera, Hing etc.	As per requirement	

Instructions

1) In a Microwave safe glass bowl put vegetables cut in long strips. Cover and keep it in Microwave. Select menu, then press start to cook.
2) When it gives a beep, remove.
3) In another Microwave safe glass bowl add oil and tempering, then press start . When it gives a beep add masala, sugar, salt and lemon juice. Add vegetables to this when it cools. Mix well and store it in a fridge.

CC4: Pizza Sauce

- **Weight Limit**: 0.3 kg
- **Utensil**: Microwave safe glass bowl

Ingredients

List		Weight
For Pizza Sauce	Weight Limit	0.3 kg
	Tomato	200 g
	Onion	1 no.
	Salt, Sugar, Ajwain, Oregano, Basil leaves	As per your taste
	Garlic pods	7-8 nos.
	Oil	2 tbsps

Instructions

1) In a Microwave safe glass bowl put oil, tomato, onion, garlic pods and keep it in Microwave. Select menu, then press start to cook.

2) When beeps, remove, allow to cool and grind it in a mixer. Now add salt, sugar, ajwain, basil leaves. Keep it in Microwave, then press start .
3) When cooking ends, the sauce is ready.

CC5: Tomato Sauce

- **Weight Limit**:0.5 kg
- **Utensil**: Microwave safe glass bowl

Ingredients

List		Weight
For Tomato Sauce	Weight Limit	0.5 kg
	Tomato	500 g
	Onion	1 No.
	Chilli powder, Salt, Sugar	As per your taste
	Chopped ginger and garlic	2 tbsps
	Garam masala	1 tsp

Instructions

1) In a Microwave safe glass bowl put tomato pieces, cover and keep it in a Microwave. Select menu, then press start to cook.
2) When beeps, remove, allow to cool and grind it in a mixer. Strain it. Add salt, sugar, garam masala. Mix well. Press start.

CC6: Masala Chutney

- **Weight Limit**: 0.3 kg
- **Utensil**: Microwave safe glass bowl

Ingredients

List		Weight
For Masala Chutney	Weight Limit	0.5 kg
	Chana Daal, Urad Daal	100 g each
	Grated dry coconut	100 g
	Sesame, Salt, Sugar, Turmeric, Dhaniya powder, Jeera powder, Curry leaves, Methi seeds	As per your taste
	Oil	1 tsp

Instructions

1) In a Microwave safe bowl put daals and keep it in Microwave. Select menu, then press start to cook.

2) When beeps, remove. Add the rest of the ingredients and keep it in microwave, then press start .
3) Remove, cool it and grind it in a mixer adding required amount of water. This chutney can be served with Idly, Parantha or Rice.

CC7: Lehsun Ki Chutney

- **Weight Limit**: 0.2 kg
- **Utensil**: Microwave safe bowl

Ingredients

List		Weight
For Lehsun Ki Chutney	Weight Limit	0.2 kg
	Chopped tomatoes	2 nos.
	Chopped garlic	20 g
	Chopped green chillies	2 nos.
	Chopped onion	0.5 cup
	Oil	2 tsps
	Jeera	1 tsp
	Haldi, red chilli powder, salt	As per taste
	Water	0.25 cup

Instructions

1) In a Microwave safe bowl mix all the ingredients. Select menu, then press start .
2) Remove when cooking ends. Allow to cool. Grind it and serve as an accompaniment.

CC8: Manchurian Sauce

- **Weight Limit**: 0.3 kg
- **Utensil**: Microwave safe bowl

Ingredients

List		Weight
For Manchurian Sauce	Weight Limit	0.3 kg
	Water	1.5 cups (300 ml)
	Vinegar sauce	1 tbsp
	Soya sauce	1 tsp
	Tomato sauce	0.5 cup
	Cornflour	2 tbsps + 0.5 cup water

Instructions

1) In a Microwave safe bowl add all the ingredients. Select menu, then press start .

CC9: Aam Ki Chutney

- **Weight Limit**: 0.3 kg
- **Utensil**: Microwave safe bowl

Ingredients

List		Weight
For Aam Ki Chutney	Weight Limit	0.3 kg
	Aam (peeled and chopped)	300 g
	Kishmish (seedless and chopped)	25 g
	Chopped ginger and garlic	2 tsps
	Tamarind pulp	1 tbsp
	Salt and sugar	As per taste

Instructions

1) In a Microwave safe bowl mix all the ingredients. Cover. Select menu, then press start .

CC 10: Coconut Chutney

- **Weight Limit**: 0.3 kg
- **Utensil**: Microwave safe glass bowl

Ingredients

List		Weight
For Coconut Chutney	Weight Limit	0.3 kg
	Fresh grated coconut	300 g
	Chopped green chillies	2 nos.
	Chopped ginger	0.5 tbsp
	Roasted split g dal (optional)	1 tbsp
	Salt	As per taste
For tempering	Oil	1 tbsp
	Mustard seeds	0.5 tsp
	Broken dry red chillies	1 no.
	Curry leaves	A few

Instructions

1) Grind grated coconut, chopped green chillies, ginger, roasted split gram dhal, salt together in a blender.
2) In a Microwave safe glass bowl add oil, mustard seeds, broken dry red chillies, curry leaves. Select menu, then press start .
3) Pour the tempering over the chutney and serve.

Indian Roti Basket

br l: Naan

- **Weight Limit**: 2 pcs
- **Utensil**: Multicook tawa, Low rack

Ingredients

List		Weight
For Naan	Weight Limit	Dough
	Refined flour (Maida)	225 g
	Curd	4 tbsps
	Milk	100 ml
	Butter	1 tbsp
	Salt	0.12 tsps
	Castor Sugar	1 tsp
	Baking powder	0.5 tsp
	Butter (Melted)	1 tsp
	Baking soda	0.25 tsp
	Onion seeds	1 tsp

Instructions

1) In a bowl sieve the flour, salt, sugar and baking powder. Rub in butter. Mix curd and Baking soda and add to the dough. Mix it well, knead a soft dough adding the milk and water (if required). After making the dough add melted butter and knead the dough again. Keep the dough covered in a warm place for about 1-2 hours to ferment properly.
2) Keep the tawa on low rack and keep inside the microwave. select category, then press start.
3) Divide the dough into 10 equal portions/balls. (approx. of 40 g each). Roll out each portion in an oblong shape. Brush with melted butter and sprinkle onion seeds on the top.
4) When beeps, keep 2 rolled out naan on the tawa and press start.
5) Serve hot with gravy curry for your choice.

NOTE

- Grease the surface with little oil to prevent the naan from sticking while rolling.

br2: Lachha Parantha

- **Weight Limit**: 2 pcs
- **Utensil**: Multicook tawa, Low rack

Ingredients

List		Weight
For Lachha Parantha	Weight Limit	Dough
	Whole wheat flour	2 cups
	Salt	0.5 tsp
	Ghee	2 tbsps
	Milk	0.5 cup
	Water	0.5 cup

Instructions

1) In a bowl combine wheat flour, salt, ghee. Rub them well. Gradually add milk and then water and knead a soft dough.
2) Keep tawa on low rack, keep inside the microwave. select category and press start.
3) Divide the dough into 11-12 equal portion (approx of 45-46 g). Roll out each portion to a diameter of 15 cm (6") spread 0.5 tsp ghee/oil all over and dust some dry flour. Fold to half and again repeat the same procedure. So that you get a long strip (like a fan).
4) Apply few drops of ghee on the strip. again roll the strip to form a ball. Roll out the ball to 12.5 cm (5") diameter for laccha parantha.
5) When beeps, keep 2 rolled out laccha parantha on tawa and press start.
6) When beeps, turn the paranthas and again press start. Make all laccha paranthas following the same procedure.
7) Apply some ghee on top (optional) and crush the parantha slightly to open up the layers. Serve hot with gravy/curry of your choice. Wrap in foil and store.

br3: Appam

- **Weight Limit**: 1 pc
- **Utensil**: Multicook tawa, High rack

Ingredients

List		Weight
For Appam	Weight Limit	Batter
	Rice (soaked for 5-6 hours)	1 cup
	Cooked rice (Boiled)	0.5 cup
	Fresh coconut shavings	2 cups
	Yeast	0.25 tsp
	Coconut water	To dissolve yeast and for diluting the batter
	Salt and Sugar	As per taste

Instructions

1) Grind together soaked rice, cooked rice and coconut shaving till get a fine thick paste. Do not add too much water. Instead use coconut water for grinding and diluting. Batter should have a consistency similar to dosa batter or slightly thickened.
2) Add the yeast (diluted in 2 tbsps coconut water) and salt and sugar to taste. Allow the batter to ferment at room temperature for at least 6-8 hours.
3) Keep the tawa on high rack, keep inside the microwave. Select category and press start.
4) When beeps, pour 0.5 cup batter (approx 100 ml) on tawa and spread evenly to a circle keep on the rack and press start.
5) When beeps, turn the appam carefully without breaking. Press start.
6) Serve hot with coconut chutney or veg stew.

NOTE

- While pouring the appam batter, try to make a thin size appam. It should not be very thick.

br4: Masala Roti

- **Weight Limit**: 2 pcs
- **Utensil**: Multicook tawa, Low rack

Ingredients

List		Weight
For Masala Roti	Weight Limit	Dough
	Whole wheat flour	1 cup
	Besan	0.75 cup
	Finely copped onion	1 no. (medium)
	Finely chopped green chilli	2 nos.
	Black pepper powder	1 tsp
	Red chilli powder	1 tsp
	Garam Masala	0.5 tsp
	Ghee	1 tbsp
	Salt	As per taste
	Fresh Curd	0.25 cup
	Water (to knead dough)	0.25 cup
	Oil	0.5 tsp
	Coriander leaves (Chopped)	2 tbsps

Instructions

1) In a bowl combine whole wheat flour, besan, chopped onion, chopped green chillies, coriander leaves and all the spices. Rub in ghee and curds. Mix well and knead soft dough adding the water. Knead the dough again after adding oil. Keep the dough covered for 5-10 minutes.
2) Keep the tawa on low rack. Keep inside the microwave Select category and press start.
3) Divide the dough into 7 equal portions (approx of 60 g each). Roll out each portion into a diameter of 130 mm. use little dry flour while rolling the roti to prevent it from sticking to surface.
4) When beeps keep 2 rolled out roties on tawa and press start.
5) When beeps, turn and again press start. Make all the roties following the same procedure.
6) Serve hot with pickle or curd. Wrap in foil and store.

br5: Missi Roti

- **Weight Limit**: 2 pcs
- **Utensil**: Multicook tawa, Low rack

Ingredients

List		Weight
For Missi Roti	Weight Limit	Dough
	Wheat flour	1.5 cups
	Besan	1.5 cups
	Oil	4 tbsps
	Kasuri methi, Red Chilli powder, Salt	As per taste
	Water (for dough kneading)	50 ml
	Curd	0.5 cup

Instructions

1) In a bowl add all the ingredients of the dough and knead it by rubbing in the oil in the flour and slowly adding water to make a soft dough.
2) Divide the dough into, 11 equal portions (each approx 50 g) grease the surface on which roti will be rolled with little oil. Take the dough and roll out the roti to 5 diameter.
3) Keep the tawa on low rack and put few drops of oil and spread. Select category and keep the tawa and low rack inside the microwave and press start.
4) When beeps, keep the rolled out missi roties on the tawa and press start.
5) When beeps, add 0.25 tsp oil on the roties and turn over. Press start. Wrap in foil and store.

brd: Stuffed Naan

- **Weight Limit**: 2 pcs
- **Utensil**: Multicook tawa, Low rack

Ingredients

List		Weight
For Stuffed Naan	Weight Limit	Dough
	Refined flour (maida)	225 g
	Curd	4 tbsps
	Milk	100 ml
	Butter	1 tbsp
	Salt	0.12 tsps
	Castor Sugar	1 tsp
	Baking powder	0.5 tsp
	Butter (melted)	1 tsp
	Baking soda	0.25 tsp
	Onion seeds	1 tsp
For filling	Grated Paneer	150 g
	Chopped onions	1 no. (medium)
	Chopped green chilli	2 nos.
	Coriander leaves (Chopped)	A few sprigs
	Red Chilli powder, salt, garam masala, anardana powder	As per taste

Instructions

1) In a bowl add all the ingredients mentioned for filling and mix well and prepare the stuffing for naan.
2) In another bowl sieve the flour, salt, sugar and baking powder. Rub in butter. Mix curd and Baking soda and add to the dough. Mix well and knead and soft dough adding the milk and water (if required). Add melted butter and again knead the dough. Keep the dough covered in a warm place of about 1-2 hours to ferment properly.
3) Keep the tawa on low rack. Keep inside the microwave. Select category and press start.
4) Divide the dough into 10-11 equal portions (approx 40 g each) Roll out a portion and put 2 tbsps stuffing and fold from all sides and again make a ball. Roll out again to an oblong shape. Brush the top with melted butter and sprinkle onion seeds.
5) When beeps, keep 2 rolled out naans on tawa and press start.
6) Make all other naans following the same procedure. Serve hot with the gravy/curry of your choice.

NOTE

- Grease the surface with little oil to prevent the naan from sticking to the surface while rolling.

br7: Khasta Parantha

- **Weight Limit**: 2 pcs
- **Utensil**: Multicook tawa, Low rack

Ingredients

List		Weight
For Khasta Parantha	Weight Limit	Dough
	Whole wheat flour	1.5 cups
	Melted butter	0.3 cup
	Salt	As per taste
	Buttermilk	0.5 cup

Instructions

1) Mix whole wheat flour, melted butter, salt in a bowl.
2) Gradually add buttermilk to form a firm dough. Add more buttermilk (if required).
3) After kneading lightly on a floured surface, form into a smooth ball.
4) Allow the dough to rest for 20 minutes covered. Divide whole dough into 8 equal portion (45 g).
5) On a lightly floured surface, roll out each portion into 12.5 cm (5") diameter rounds.
6) Keep the tawa on low rack and select category and keep the tawa inside the microwave and press start.
7) When beeps, put 2 parathas on tawa and press start.
8) When beeps, smear with 0.5 tsp oil and turn over and press start. Wrap in foil and store.

br8: Pudina Parantha

- **Weight Limit**: 2 pcs
- **Utensil**: Multicook tawa, High rack

Ingredients

List		Weight
For Pudina Parantha	Weight Limit	Dough
	Whole wheat flour	1 cup
	Mint leaves	0.5 cup
	Salt	As per taste
	Butter	2 tbsps
	Chaat Masala	2 tsps
	Oil/ghee	2 tsps
	Dry pudina powder	1 tbsp
	Water	As required to make the dough

Instructions

1) Wash and put dry and chop mint leaves finely.
2) In a bowl combine wheat flour, mint leaves, salt, butter, chaat masala, gradually add water and knead a soft dough. Keep the dough covered for 5-7 minutes.
3) Keep the tawa on high rack. Keep inside the microwave Select category and press start.
4) Divide the dough into 5-6 equal sized portions. Roll out each dough into a diameter of 15 cm (6"). Spread 0.5 tsp oil/ghee all over and dust with some dry pudina powder, fold the rolled out chapati like a fan and again make a ball and again roll out the ball to a measure of 12.5 cm (5") diameter.
5) When beeps keep 2 rolled out paranthas on tawa and press start.
6) When beeps apply 0.25 tsp ghee/oil on paranthas and turn and again press start. Make all the paranthas with the similar procedure.
7) Serve them hot with curd or pickle. Wrap in foil and store.

br9: Rajma Parantha

- **Weight Limit**: 2 pcs
- **Utensil**: Multicook tawa, High rack

Ingredients

List		Weight
For Rajma Parantha	Weight Limit	Dough
	Boiled Rajma	0.3 cup
	Whole Wheat flour (atta)	1 cup
	Soyabean flour	2 tbsps
	Chopped green chillies	3-4 nos.
	Fresh mint leaves	8-10 nos.
	Anardana (Crushed)	1 tsp
	Red Chilli Powder	1 tsp
	Tomato Puree	2 tbsps
	Salt	As per taste
	Oil	2 tsps
	Coriander leaves (Chopped)	2 tbsps
	Water	To knead to dough

Instructions

1) In a bowl combine wheat flour boiled and mashed rajma, soyabean flour, tomato puree, chopped green chilli, coriander leaves, freshly crushed mint leaves, Anardana, oil, red chilli powder, salt. Mix and gradually add water and knead a soft dough.
2) Keep the tawa on high rack. Keep inside the microwave. Select category and press start.
3) Divide the dough into 6-7 equal sized portions (approx of 45 g). Roll out each dough into 12.5 cm (5") diameter circle.
4) When beeps keep 2 rolled out paranthas on tawa and press start.
5) When beeps, turn the paranthas. Press start. Make all the paranthas with the similar procedure.
6) Serve them hot with curd or pickle. Wrap in foil and store.

br 10: Paneer Parantha

- **Weight Limit**: 2 pcs
- **Utensil**: Multicook tawa, Low rack

Ingredients

List		Weight
For Paneer Parantha	Weight Limit	Dough
	Whole wheat flour (atta)	2 cups
	Desi ghee	1 tbsp + 1 tsp
	Salt	A pinch
	Water (to knead dough)	1 cup (200 ml)
For stuffing	Grated paneer	2 cups
	Chopped green chilli (deseeded)	3 nos.
	Chopped coriander leaves	2 tbsps
	Salt, red chilli powder, garam masala	As per taste
	Anardana powder	1 tsp

Instructions

1) In a bowl take whole wheat flour, salt and 1 tbsp desi ghee. Rub with hands. gradually add water and knead a soft dough. Add 1 tsp desi ghee and knead again. Cover with a muslin cloth and leave for some time.
2) In another bowl take all the ingredients of stuffing and mix well.
3) Grease the multicook tawa with 0.25 tsp ghee and keep on low rack. Keep the low rack and tawa inside the microwave. Select category and press start.
4) Take 35 g dough (approx.) and make round ball. Grease the surface with little ghee. Roll out the ball a little and put 1 tbsp stuffing and seal it carefully and roll it again slightly to 12.5 cm (5") diameter.
5) When beeps, keep 2 rolled out paranthas on preheated tawa and low rack and keep inside the microwave and press start.
6) When beeps, apply 0.25 tsp ghee on top of paranthas and turn and press start. Serve the paneer paranthas hot with fresh curd.

br 11: Kulche

- **Weight Limit**: 2 pcs
- **Utensil**: Multicook tawa, Low rack

Ingredients

List		Weight
For Kulche	Weight Limit	Dough
	Maida	1 cup
	Salt	A pinch
	Fresh cream	2 tbsps
	Lukewarm water	50 ml
	Sugar	1 tbsp
	Dry yeast	1 tsp
	Oil	0.5 tsp
	Kalonji (onion seeds)	As required
	Coriander leaves	As required

Instructions

1) In a cup/bowl take 50 ml lukewarm water and add sugar. Stir well. Add dry yeast and stir again to dissolve. Keep aside for at least 5-7 minutes.
2) In a bowl take maida, salt and fresh cream. Mix well with hands. Add the yeast water and knead a firm dough. Pour 0.5 tsp oil and knead again.
3) Divide the dough into 4 equal portions (approx. 60 g each). Make balls and apply butter on top and sprinkle kalonji (onion seeds) and fresh coriander leaves on top. Press with fingers and dust with maida and roll out each ball into a diameter of 5". Keep the rolled dough on dusted multi cook tawa. Keep them covered in dark and warm place for at least 30 minutes.
4) Select category and press start.
5) When beeps, keep tawa with rolled doughs and press start.
6) Apply butter on top of kulchas or roast them a little and serve them hot with chhole.

br 12: Daal Parantha

- **Weight Limit**: 2 pcs
- **Utensil**: Multicook tawa, Low rack

Ingredients

List		Weight
For Daal Parantha	Weight Limit	2 pcs

List		Weight
For Dough	Whole wheat flour(aata)	1 cup
	Desi ghee	1 tbsp + 1 tsp
	Salt	A pinch
	Water	To knead dough
For Mixing	Boiled and mashed Daal	0.3 cup
	Chopped green chilli (deseeded)	3 nos.
	Chopped coriander leaves	2 tbsps
	Salt, Red chilli powder, Garam masala	As per taste

Instructions

1) In a bowl, combine wheat flour, daal, chopped green chillies, coriander leaves, anardana powder, oil, red chilli powder, salt. Mix and gradually add water and knead a dough.
2) Keep tawa on low rack. Keep inside microwave. Select menu and press start.
3) Divide dough into 6-7 equal portions(approx 35-40g). Roll out each dough into ovular shape of length 15 cm
4) When beeps keep two rolled out paranthas on tawa and press start.
5) When beeps turn paranthas. Press start. Make all the paranthas same procedure.
6) Serve them hot with curd or pickle. Wrap in foil and store.

br 13: Aloo Parantha

- **Weight Limit**: 2 pcs
- **Utensil**: Multicook tawa, Low rack

Ingredients

List		Weight
For Aloo Parantha	Weight Limit	2 pcs
For Dough	Whole wheat flour (aata)	2 cups
	Desi ghee	1 tbsp + 1 tsp
	Salt	A pinch
	Water (to knead dough)	1 cup (200 ml)

List		Weight
For Stuffing	Boiled and mashed potato	2 cups
	Chopped green chilli (deseeded)	3 nos.
	Chopped coriander leaves	2 tbsps
	Salt, Red chilli powder, Garam masala	As per taste
	Anardana powder	1 tsp
	Water	To knead dough

Instructions

1) In a bowl, take whole wheat flour, salt and 1 tbsp desi ghee. Rub with hands. Gradually add water and knead a soft dough. Add 1 tsp desi ghee and knead again. Cover with a muslin cloth and leave for some time.
2) In another bowl take all the ingredients of stuffing and mix well.
3) Grease the multi cook tawa with 0.25 tsp ghee and keep on rack. Keep rack and tawa inside the microwave. Select menu and press start.
4) Take 35 g dough (approx.) and make round ball. Grease the surface with little ghee. Roll out the ball a little and put 1 tbsp stuffing and seal it carefully and roll it again slightly to oval shape to 15cm length.
5) When beeps keep two rolled out paranthas on tawa and press start.
6) When beeps turn paranthas. Press start. Make all the paranthas same procedure.
7) Serve them hot with curd or pickle. Wrap in foil and store.

br 14: Palak Parantha

- **Weight Limit**: 2 pcs
- **Utensil**: Multicook tawa, Low rack

Ingredients

List		Weight
For Palak Parantha	Weight Limit	2 pcs

List		Weight
For Dough	Whole wheat flour(aata)	2 cups
	Palak (boiled)	250 g
	Green chilli chopped	2 nos.
	Ajwain	0.25 tsp
	Hing	A pinch
	Salt, Red chilli powder, Garam masala	As per taste
	Oil/Ghee	2 tsps
	Water	To knead dough

Instructions

1) Take boiled spinach leaves and puree the spinach in a blender.
2) In a bowl combine wheat floar, salt, hing, ajwain, spinach puree, red chilli powder and garam masala and knead a soft dough. Keep the dough covered for 5-7 minutes.
3) Grease the multi cook tawa with 0.25 tsp ghee and keep on rack. Keep rack and tawa inside the microwave. Select menu and press start.
4) Take 35 g dough (approx.) and make round ball. Grease the surface with little ghee. Roll out the ball a little and put 1 tbsp stuffing and seal it carefully and roll it again slightly to oval shape to 15 cm length.
5) When beeps keep two rolled out paranthas on tawa and press start.
6) When beeps turn paranthas. Press start. Make all the paranthas same procedure.
7) Serve them hot with curd or pickle. Wrap in foil and store.

br 15: Gobhi Parantha

- **Weight Limit**: 2 pcs
- **Utensil**: Multicook tawa, Low rack

Ingredients

List		Weight
For Gobhi Parantha	Weight Limit	2 pcs
For Dough	Whole wheat flour(aata)	2 cups
	Desi ghee	1 tbsp + 1 tsp
	Salt	A pinch
	Water (to knead dough)	1 cup (200 ml)

List		Weight
For Stuffing	Grated Gobhi	2 cups
	Chopped green chilli (deseeded)	3 nos.
	Chopped coriander leaves	2 tbsps
	Salt, Red chilli powder, Garam masala	As per taste
	Anardana powder	1 tsp
	Water	To knead dough

Instructions

1) In a bowl, take whole wheat flour, salt and 1 tbsp desi ghee. Rub with hands. Gradually add water and knead a soft dough. Add 1 tsp desi ghee and knead again. Cover with a muslin cloth and leave for some time.
2) In another bowl take all the ingredients of stuffing and mix well.
3) Grease the multi cook tawa with 0.25 tsp ghee and keep on high rack. Keep high rack and wawa inside the microwave. Select menu and press start.
4) Take 35 g dough (approx.) and make round ball. Grease the surface with little ghee. Roll out the ball a little and put 1 tbsp stuffing and seal it carefully and roll it again slightly to oval shape to 15 cm length.
5) When beeps keep two rolled out paranthas on tawa and press start.
6) When beeps turn paranthas. Press start. Make all the paranthas same procedure.
7) Serve them hot with curd or pickle. Wrap in foil and store.

br 16: Ajwain Parantha

- **Weight Limit**: 2 pcs
- **Utensil**: Multicook tawa, Low rack

Ingredients

List		Weight
For Ajwain Parantha	Weight Limit	2 pcs
For Dough	Whole wheat flour(aata)	2 cups
	Ajwain	2 tsps
	Salt, Red chilli powder, Garam masala	As per taste
	Water	To knead dough

Instructions

1) In a bowl combine wheat flour, salt, 1 tsp oil, water to knead a soft dough.

2) Keep the tawa on low rack, keep inside microwave. Select menu and press start.
3) Divide the dough 5-6 equal size portions. Roll out each dough into diameter of 130 mm. Spread 0.5 tsp oil/ghee all over and dust with some ajwain and salt, fold the rolled out chapati like a fan and again make a ball and roll out the ball to a length of 15 cm (oval shape).
4) When beeps keep 2 rolled out paranthas on tawa and press start.
5) When beeps apply 1/4 tsps ghee/oil on paranthas and turn and again press start. Make all the paranthas with the same procedure.
6) Serve them hot with curd or pickle. Wrap in foil and store.

br 17: Pyaaz Parantha

- **Weight Limit**: 2 pcs
- **Utensil**: Multicook tawa, Low rack

Ingredients

List		Weight
For Pyaaz Parantha	Weight Limit	2 pcs
For Dough	Whole wheat flour(aata)	2 cups
	Desi ghee	1 tbsp + 1 tsp
	Salt	A pinch
	Water (to knead dough)	1 cup (200 ml)
For Stuffing	Grated Pyaaz	2 cups
	Chopped green chilli (deseeded)	3 nos.
	Chopped coriander leaves	2 tbsps
	Salt, Red chilli powder, Garam masala	As per taste
	Anardana powder	1 tsp

Instructions

1) In a bowl, take whole wheat flour, salt and 1 tbsp desi ghee. Rub with hands. Gradually add water and knead a soft dough. Add 1 tsp desi ghee and knead again. Cover with a muslin cloth and leave for some time.
2) In another bowl take all the ingredients of stuffing and mix well.
3) Grease the multi cook tawa with 0.25 tsp ghee and keep on rack. Keep high rack and wawa inside the microwave. Select menu and press start.
4) Take 35 g dough (approx.) and make round ball. Grease the surface with little ghee. Roll out the ball a little and put 1 tbsp stuffing and seal it carefully and roll it again slightly to oval shape to 15 cm length.
5) When beeps keep two rolled out paranthas on tawa and press start.
6) When beeps turn paranthas. Press start. Make all the paranthas same procedure.

7) Serve them hot with curd or pickle. Wrap in foil and store.

br 18: Chatpata Parantha

- **Weight Limit**: 2 pcs
- **Utensil**: Multicook tawa, Low rack

Ingredients

List		Weight
For Chatpata Parantha	Weight Limit	2 pcs
For Dough	Whole wheat flour (aata)	2 cups
	Amchoor	0.25 tsp
	Chaat Masala	1 tsp
	Salt, Red chilli powder, Garam masala	As per taste
	Water	To knead dough

Instructions

1) In a bowl combine wheat flour, salt, amchoor, 1 tsp oil, water to knead a soft dough.
2) Keep the tawa on low rack, keep inside microwave. Select menu and press start.
3) Divide the dough into 5-6 equal size portions. Roll out each dough into diameter of 150 mm. Spread 0.5 tsp oil/ghee all over and dust with some chaat masala fold the rolled out chapati like a fan and again make a ball and roll out the ball to a length of 15 cm (oval shape).
4) When beeps keep 2 rolled out paranthas on tawa and press start.
5) When beeps apply 0.25 tsp ghee/oil on paranthas and turn and again press start. Make all the paranthas with the same procedure.
6) Serve them hot with curd or pickle. Wrap in foil and store.

br 19: Aloo Gobhi Parantha

- **Weight Limit**: 2 pcs
- **Utensil**: Multicook tawa, Low rack

Ingredients

List		List
For Aloo Gobhi Parantha	Weight Limit	2 pcs

List		List
For Dough	Whole wheat flour(aata)	2 cups
	Desi ghee	1 tbsp + 1 tsp
	Salt	A pinch
	Water (to knead dough)	1 cup (200 ml)
For Stuffing	Boiled and mashed potato	1 cup
	Chopped green chilli (deseeded)	1 cup
	Boiled and grated gobhi	3 nos.
	Chopped coriander leaves	2 tbsps
	Salt, Red chilli powder, Garam masala	As per taste
	Anardana powder	1 tsp

Instructions

1) In a bowl, take whole wheat flour, salt and 1 tbsp desi ghee. Rub with hands. Gradually add water and knead a soft dough. Add 1 tsp desi ghee and knead again. Cover with a muslin cloth and leave for some time.
2) In another bowl take all the ingredients of stuffing and mix well.
3) Grease the multi cook tawa with 0.25 tsp ghee and keep on low rack. Keep rack and tawa inside the microwave. Select menu and press start.
4) Take 35 g dough (approx.) and make round ball. Grease the surface with little ghee. Roll out the ball a little and put 1 tbsp stuffing and seal it carefully and roll it again slightly into 15 cm ovular length.
5) When beeps keep two rolled out paranthas on tawa and press start.
6) When beeps turn parantha. Press start. Make all the paranthas same procedure.
7) Serve them hot with curd or pickle. Wrap in foil and store.

br20: Methi Parantha

- **Weight Limit**: 2 pcs
- **Utensil**: Multicook tawa, Low rack

Ingredients

List		Weight
For Methi Parantha	Weight Limit	2 pcs

List		Weight
For Dough	Whole wheat flour(aata)	2 cups
	Desi ghee	1 tbsp + 1 tsp
	Salt	A pinch
	Water (to knead dough)	1 cup (200 ml)
For Stuffing	Chopped Methi	2 cups
	Chopped green chilli (deseeded)	3 nos.
	Salt, Red chilli powder, Garam masala	As per taste
	Water	To knead dough

Instructions

1) In a bowl, take whole wheat flour, salt and 1 tbsp desi ghee. Rub with hands. Gradually add water and knead a soft dough. Add 1 tsp desi ghee and knead again. Cover with a muslin cloth and leave for some time.
2) In another bowl take all the ingredients of stuffing and mix well.
3) Grease the multi cook tawa with 0.25 tsp ghee and keep on Low rack. Keep low rack and tawa inside the microwave. Select menu and press start.
4) Take 35 g dough (approx.) and make round ball. Grease the surface with little ghee. Roll out the ball a little and put 1 tbsp stuffing and seal it carefully and roll it again slightly to oval shape to 15 cm length.
5) When beeps keep two rolled out paranthas on tawa and press start.
6) When beeps turn paranthas. Press start. Make all the paranthas same procedure.
7) Serve them hot with curd or pickle. Wrap in foil and store.

br2 1: Cabbage Parantha

- **Weight Limit**: 2 pcs
- **Utensil**: Multicook tawa, Low rack

Ingredients

List		Weight
For Cabbage Parantha	Weight Limit	2 pcs
For Dough	Whole wheat flour(aata)	2 cups
	Desi ghee	1 tbsp + 1 tsp
	Salt	A pinch
	Water (to knead dough)	1 cup (200 ml)

List		Weight
For Stuffing	Grated Cabbage	2 cups
	Chopped green chilli (deseeded)	3 nos.
	Chopped coriander leaves	2 tbsps
	Salt, Red chilli powder, Garam masala	As per taste
	Anardana powder	1 tsp
	Water	To knead dough

Instructions

1) In a bowl, take whole wheat flour, salt and 1 tbsp desi ghee. Rub with hands. Gradually add water and knead a soft dough. Add 1 tsp desi ghee and knead again. Cover with a muslin cloth and leave for some time.
2) In another bowl take all the ingredients of stuffing and mix well.
3) Grease the multi cook tawa with 0.25 tsp ghee and keep on low rack. Keep low rack and tawa inside the microwave. Select menu and press start.
4) Take 35 g dough (approx.) and make round ball. Grease the surface with little ghee. Roll out the ball a little and put 1 tbsp stuffing and seal it carefully and roll it again slightly to oval shape to 15 cm length.
5) When beeps keep two rolled out paranthas on tawa and press start.
6) When beeps turn paranthas. Press start. Make all the paranthas same procedure.
7) Serve them hot with curd or pickle. Wrap in foil and store.

br22: Corn Parantha

- **Weight Limit**: 2 pcs
- **Utensil**: Multicook tawa, Low rack

Ingredients

List		Weight
For Corn Parantha	Weight Limit	2 pcs
For Dough	Whole wheat flour(aata)	2 cups
	Desi ghee	1 tbsp + 1 tsp
	Salt	A pinch
	Water (to knead dough)	1 cup (200 ml)

List		Weight
For Stuffing	Boiled and mashed corns	2 cups
	Chopped green chilli (deseeded)	3 nos.
	Chopped coriander leaves	2 tbsps
	Salt, Red chilli powder, Garam masala	As per taste
	Anardana powder	1 tsp
	Water	To knead dough

Instructions

1) In a bowl, take whole wheat flour, salt and 1 tbsp desi ghee. Rub with hands. Gradually add water and knead a soft dough. Add 1 tsp desi ghee and knead again. Cover with a muslin cloth and leave for some time.
2) In another bowl take all the ingredients of stuffing and mix well.
3) Grease the multi cook tawa with 0.25 tsp ghee and keep on low rack. Keep rack and tawa inside the microwave. Select menu and press start.
4) Take 35 g dough (approx.) and make round ball. Grease the surface with little ghee. Roll out the ball a little and put 1 tbsp stuffing and seal it carefully and roll it again slightly to oval shape to 15 cm length.
5) When beeps keep two rolled out paranthas on tawa and press start.
6) When beeps turn paranthas. Press start. Make all the paranthas same procedure.
7) Serve them hot with curd or pickle. Wrap in foil and store.

br23: Carrot Parantha

- **Weight Limit**: 2 pcs
- **Utensil**: Multicook tawa, Low rack

Ingredients

List		Weight
For Carrot Parantha	Weight Limit	2 pcs
For Dough	Whole wheat flour(aata)	2 cups
	Desi ghee	1 tbsp + 1 tsp
	Salt	A pinch
	Water (to knead dough)	1 cup (200 ml)

List		Weight
For Stuffing	Grated Carrot	2 cups
	Chopped green chilli (deseeded)	3 nos.
	Chopped coriander leaves	2 tbsps
	Salt, Red chilli powder, Garam masala	As per taste
	Anardana powder	1 tsp
	Water	To knead dough

Instructions

1) In a bowl, take whole wheat flour, salt and 1 tbsp desi ghee. Rub with hands. Gradually add water and knead a soft dough. Add 1 tsp desi ghee and knead again. Cover with a muslin cloth and leave for some time.
2) In another bowl take all the ingredients of stuffing and mix well.
3) Grease the multi cook tawa with 0.25 tsp ghee and keep on low rack. Keep low rack and tawa inside the microwave. Select menu and press start.
4) Take 35 g dough (approx.) and make round ball. Grease the surface with little ghee. Roll out the ball a little and put 1 tbsp stuffing and seal it carefully and roll it again slightly to oval shape to 15 cm length.
5) When beeps keep two rolled out paranthas on tawa and press start.
6) When beeps turn paranthas. Press start. Make all the paranthas same procedure.
7) Serve them hot with curd or pickle. Wrap in foil and store.

br24: Pea Parantha

- **Weight Limit**: 2 pcs
- **Utensil**: Multicook tawa, Low rack

Ingredients

List		Weight
For Pea Parantha	Weight Limit	2 pcs
For Dough	Whole wheat flour(aata)	2 cups
	Desi ghee	1 tbsp + 1 tsp
	Salt	A pinch
	Water (to knead dough)	1 cup (200 ml)

List		Weight
For Stuffing	Boiled and mashed pea	2 cups
	Chopped green chilli (deseeded)	3 nos.
	Chopped coriander leaves	2 tbsps
	Salt, Red chilli powder, Garam masala	As per taste
	Anardana powder	1 tsp
	Water	To knead dough

Instructions

1) In a bowl, take whole wheat flour, salt and 1 tbsp desi ghee. Rub with hands. Gradually add water and knead a soft dough. Add 1 tsp desi ghee and knead again. Cover with a muslin cloth and leave for some time.
2) In another bowl take all the ingredients of stuffing and mix well.
3) Grease the multi cook tawa with 0.25 tsp ghee and keep on low rack. Keep low rack and tawa inside the microwave. Select menu and press start.
4) Take 35 g dough (approx.) and make round ball. Grease the surface with little ghee. Roll out the ball a little and put 1 tbsp stuffing and seal it carefully and roll it again slightly to oval shape to 15 cm length.
5) When beeps keep two rolled out paranthas on tawa and press start.
6) When beeps turn paranthas. Press start. Make all the paranthas same procedure.
7) Serve them hot with curd or pickle. Wrap in foil and store.

br25: Mushroom Parantha

- **Weight Limit**: 2 pcs
- **Utensil**: Multicook tawa, Low rack

Ingredients

List		Weight
For Mushroom Parantha	Weight Limit	2 pcs
For Dough	Whole wheat flour(aata)	2 cups
	Desi ghee	1 tbsp + 1 tsp
	Salt	A pinch
	Water (to knead dough)	1 cup (200 ml)

List		Weight
For Stuffing	Boiled and mashed Mushrooms	2 cups
	Chopped green chilli (deseeded)	3 nos.
	Chopped coriander leaves	2 tbsps
	Salt, Red chilli powder, Garam masala	As per taste
	Anardana powder	1 tsp
	Water	To knead dough

Instructions

1) In a bowl, take whole wheat flour, salt and 1 tbsp desi ghee. Rub with hands. Gradually add water and knead a soft dough. Add 1 tsp desi ghee and knead again. Cover with a muslin cloth and leave for some time.
2) In another bowl take all the ingredients of stuffing and mix well.
3) Grease the multi cook tawa with 0.25 tsp ghee and keep on low rack. Keep Low rack and tawa inside the microwave. Select menu and press start.
4) Take 35 g dough (approx.) and make round ball. Grease the surface with little ghee. Roll out the ball a little and put 1 tbsp stuffing and seal it carefully and roll it again slightly to oval shape to 15 cm length.
5) When beeps keep two rolled out paranthas on tawa and press start.
6) When beeps turn paranthas. Press start. Make all the paranthas same procedure.
7) Serve them hot with curd or pickle. Wrap in foil and store.

Ghee

Gh I: Ghee

- **Weight Limit**: 500 g
- **Utensil**: Microwave safe glass bowl

Ingredients

List		Weight
For Ghee	Weight Limit	500 g
	Malai/Cream (Fresh or Fresh or Collected over a week)	500 g
	Cold Water	As required

Instructions

1) In a big vessel put all the malai and blend with a hand mixer till it solidifies into butter and separates from residual liquid.

2) Wash this white butter in cold water as couple of times, so as to remove any remaining smell of milk.
3) Now collect all the butter in a Microwave safe glass bowl and keep in the microwave. Select menu and press start.
4) When beeps, stir it properly with the spoon (not plastic) and again press start.
5) After beeps, allow it to stand for 5 minutes and then strain it through stainless steel strainer into a glass jar and then store it.

Diet Fry

dF I: Chicken Nuggets

- **Weight Limit**: 0.1 ~ 0.3 kg
- **Utensil**: Microwave safe glass bowl, Multicook tawa, High rack

Ingredients

List		Weight-1	Weight-2	Weight-3
For Chicken Nuggets	Weight Limit	0.1 kg	0.2 kg	0.3 kg
	Boneless Chicken	100 g	150 g	200 g
	Bread slice	1 no.	2 nos.	2 nos.
	Pepper corns	4-5	5-6	6-7
	Cloves	2-3	3-4	4-5
	Garlic paste	0.5 tsp	1 tsp	1.5 tsps
	Olive oil	1 tsp	1.5 tsps	2 tsps
	Salt	As per taste		
	Chopped garlic	2 cloves	3 cloves	4 cloves

Instructions

1) In a Microwave safe glass bowl put boneless chicken, pepper corns, cloves, olive oil, chopped garlic. Mix well and cover. Select Category and weight, press start.
2) When beeps, remove the bowl from microwave oven. Allow to cool and grind everything in a mixer. Take out in the bowl add salt, crumbled bread slices. Mix well.
3) Make small round shaped nuggets from the mixture. Keep on tawa. Place the tawa on high rack.
4) Press start.
5) When beeps, turn the nuggets
6) Press start.
7) Serve them hot with tomato Ketchup and shredded salad.

NOTE

- If the mixture of nuggets is too dry, then sprinkle few drops of water to it.

dF2: Aloo Chips

- **Weight Limit**: 0.2 kg
- **Utensil**: Microwave glass tray

Ingredients

List		Weight
For Aloo Chips	Weight Limit	0.2 kg
	Potato (very thinly sliced)	200 g
	Oil	A few drops
	Salt, Chaat masala (optional)	As per taste

Ingredients

1) In a bowl mix very thinly sliced potatoes, salt, chaat masala.
2) Put few drop of oil on the glass tray of the microwave oven and smear it properly throughout.
3) Spread the potato slices throughout the glass tray. select category and press start. Allow the glass tray to cool down. Remove the chips and serve.

dF3: Gujiya

- **Weight Limit**: 10 pcs
- **Utensil**: Multicook tawa, Low rack, High rack

Ingredients

List		Weight
For Gujiya	Weight Limit	10 pcs
For Dough	Maida	100 g
	Desi ghee	1 tbsp and 1 tsp
	Water	To knead the dough

List		Weight
For Stuffing	Grated Khoya	50 g
	Dessicated coconut	50 g
	Powdered Sugar	50 g
	Elaichi powder	1 tsp
	Kishmish, Chopped, Almonds, Cashew nuts	As required

Instructions

1) In a bowl put all the ingredients of stuffing and mix well
2) In another bowl put maida, 1 tbsp ghee, gradually add water and knead a soft dough for gujias. Put 1 tsp ghee in dough and knead again and keep the dough covered for 15-20 minutes.
3) Divide the dough in small balls of equal size and roll out each ball into a thin circle. *Place the rolled out circle in a *gujia mould and fill the centre with stuffing (as required). Close the gujia mould carefully and press firmly at edges to seal them properly. remove the excess part of the dough bulging out of the mould. Remove the gujia from the mould. Prepare all the gujias in the similar way. Brush the gujias with 2 tsp oil.
4) Grease the tawa with 0.25 tsp oil. Keep on low rack. keep in the microwave. Select category and press start.
5) When beeps, place the gujias on tawa and keep on low rack. Press start.
6) When beeps, keep the tawa on high rack, sprinkle 1 tsp ghee/oil on all the gujias and Press start.

NOTE

- Grease the surface with 1-2 drops of oil before rolling the circle for gujias

  *Not provided with LG standard accessories.

dF4: Samosa

- **Weight Limit**: 8 pcs
- **Utensil**: Multicook tawa, Low rack

Ingredients

List		Weight
For Samosa	Weight Limit	8 pcs
For Dough	Wheat flour (Refined)	1 cup
	Melted ghee	0.5 tbsp
	Oil	for kneading
	Salt	0.5 tsp

List		Weight
For Stuffing	Boiled potatoes	2 cups
	Boiled peas	0.5 cup
	Ginger-green chilli paste	1 tsp
	Amchoor	1.5 tsps
	Red chilli powder	1 tsp
	Finely chopped Coriander leaves	2 tbsps
	Jeera	1 tsp
	Oil	2 tsps

Instructions

1) Preparation for stuffing - In a Microwave safe glass bowl add oil, jeera, microwave 100% of 3 minutes. Add boiled and mashed potatoes, green chilli and ginger paste, salt, amchoor, red chilli powder, green peas and coriander leaves. Mix well and microwave 100% for 3 minutes. Allow cool.
2) For dough - Combine all the ingredients together in a bowl and knead into a firm dough using enough water. Keep aside covered for 15 minutes Knead again using oil until smooth.
3) Prepare medium size 8 chapaties out of the dough Divide each chapati into 2 halves, make a cone from each half. Stuff each cone with the portion of stuffing. seal the edges carefully using little water. Keep aside. Brush the samosas with 2 tsp oil.
4) Grease the tawa with 0.25 tsp oil. Keep on low rack and keep it inside the microwave. Select category and press start.
5) When beeps, keep the samosas on the tawa. Keep tawa on low rack and press start. Serve with chutney

dF5: Bread Pakora

- **Weight Limit**: 4 pcs
- **Utensil**: Multicook tawa, High rack

Ingredients

List		Weight
For Batter	Weight Limit	Batter
	Besan	1 cup (130 g)
	Water	200 ml
	Salt, haldi, garam masala, red chilli powder,	As per taste

List		Weight
For filling	Boiled potatoes	2 nos. (medium)
	Chopped green chillies	2 nos.
	Chopped Coriander	1 tbsp
	Chopped ginger	1 tsp
	Salt, garam masala, red chilli powder	As per taste
	Bread slices	4 nos.
	Oil	2 tsps

Instructions

1) In a bowl put boiled potatoes and mash them. Add chopped green chillies, coriander leaves, ginger, salt, garam masala and red chilli powder and mix well.
2) In another bowl put besan and all spices and gradually add water and make a smooth batter for bread pakoras without any lumps.
3) Take bread slices, cut them half diagonally, spread the filling on one part of the bread slice and cover with the other. Prepare all other slices using same procedure. Grease the tawa with 2-3 drops oil.
4) Keep the tawa on high rack. Select category and press start.
5) When beeps, keep the bread slices coated with the batter evenly on all sides on tawa and press start.
6) When beeps, turn the bread pakoras. Sprinkle 2 tsp oil on all and press start. Serve hot with tomato ketchup.

dF6: Paneer Pakora

- **Weight Limit**: 0.4 kg
- **Utensil**: Multicook tawa, High rack

Ingredients

List		Weight
For Paneer Pakora	Weight Limit	0.4 kg
	Paneer (Cut into 3.7 cm (1.5") cubes)	400 g
For Batter	Besan	1 cup (130 g)
	Water	200 ml
	Salt, red chilli powder, haldi, garam masala	As per taste
	Oil	2 tsps

Instructions

1) In a bowl, add besan, haldi, red chilli powder, garam masala, salt. Mix well. Gradually add water in small amounts to make the batter for pakoras without any lumps. Grease the tawa with 2-3 drops oil.
2) Keep the tawa on high rack. keep inside microwave. Select category and press start.
3) When beeps, place all paneer pieces evenly coated with the batter on the tawa. Keep tawa on high rack. Press start.
4) When beeps, turn the pakoras and pour 2 tsp oil on all pakoras and again press start.
5) Serve hot with Chutney or Sauce.

dF7: Masala Vada

- **Weight Limit**: 5 pcs
- **Utensil**: Multicook tawa, High rack

Ingredients

List		Weight
For Masala Vada	Weight Limit	5 pcs
	Soaked chana dal	1 cup
	Chopped onions, chopped green chillies	0.5 cup
	Grated ginger	1 tsp
	Cumin seeds	1 tbsp
	Chopped garlic	1 tbsp
	Chopped coriander leaves	3 tbsps
	Salt	As per taste
	Red chillies	As per taste
	Oil	2 tsps

Instructions

1) Soak the chanas for 3-4 hours. Keep 1 tbsp of soaked chanas aside.
2) In a blender grind soaked chanas, green chillies, cumin seeds, ginger and salt into a coarse paste. (Don't make it into smooth paste).
3) Mix chopped onions, chopped garlic, chopped coriander leaves, soaked chana dal, red chilli powder with the coarse paste.
4) Grease the tawa with 1 tsp of oil. Keep the tawa on high rack. Keep both inside the microwave oven. Select category and press start.
5) When beeps, pour 1 tbsp of paste and spread a little. Same way prepare all the 5 vadas. Press start.
6) When beeps, pour 1 tsp oil on vadas and keep the tawa on high rack. Press start. Serve with sambhar or coconut chutney.

dF8: Chicken 65

- **Weight Limit**: 0.2 ~ 0.4 kg
- **Utensil**: Multicook tawa, High rack, Microwave safe glass bowl

Ingredients

List		Weight-1	Weight-2	Weight-3
For Chicken 65	Weight Limit	0.2 kg	0.3 kg	0.4 kg
	Chicken boneless (cut in 40 mm pieces)	200 g	300 g	400 g
	Oil	1 tbsp	1.5 tbsps	2 tbsps
	Curry leaves	As required		
	Split green chilli	3 nos.	4 nos.	5 nos.
	Mustard seeds	1 tsp	1.5 tsps	2 tsps
	Tomato ketchup	3 tbsps	4 tbsps	5 tbsps
	Lime juice (optional)	1 tsp	2 tsps	3 tsps
For Marinade	Hung curd	1 tbsp	1.5 tbsps	2 tbsps
	Maida	1 tbsp	1.5 tbsps	2 tbsps
	Cornflour	1 tsp	1.5 tsps	2 tsps
	Egg (beaten)	0.5 no.	1 no.	1 no.
	Red food colour	A pinch		
	Ginger-garlic paste	As required		
	Salt, turmeric powder	As per taste		
	Red chilli powder	1 tsp	1.5 tsps	1.5 tsps

Instructions

1) Add all the ingredients of marinade in a bowl and mix well. Add boneless chicken pieces and mix and cover. Keep in refrigerator for atleast 30 minutes.
2) When beeps, take marinated chicken pieces and place on tawa. Keep tawa and high rack inside the microwave.
3) Select category and weight, then press start.
4) When beeps, remove high rack and tawa from microwave. Keep aside. In a Microwave safe glass bowl take oil, mustard seeds, curry leaves, split green chillies and press start.

5) When beeps, add roasted chicken pieces pieces and tomato ketchup to the Microwave safe glass bowl. Mix well and press start. Squeeze lime juice on top and serve immediately.

dF9: Stuffed Aloo Patties

- **Weight Limit**: 3 pcs
- **Utensil**: Multicook tawa, High rack

Ingredients

List		Weight
For Stuffed Aloo Patties	Weight Limit	3 pcs
For Patties	Boiled and mashed potatoes	2 cups
	Cornflour	1 tbsp
	Finely chopped green chilli	2 nos.
	Salt	As per taste
	Oil	1 tsp
For Stuffing	Oil	2 tsps
	Boiled green pea	0.5 cup
	Ginger and green chilli paste	2 tsp
	Chopped coriander leaves	2 tbsps
	Cumin seeds	1 tsp
	Salt, red chilli powder, garam masala	As per taste
	Lemon juice (optional)	2 tbsps

Utensil

1) Pre-Preparation for Stuffing : In a Microwave safe glass bowl take oil and cumin seeds and microwave 100% for 3 minutes. Add boiled green pea, ginger and green chilli paste, chopped coriander leaves and all spices. Mix well and microwave 100% for 2 minutes. Squeeze fresh lemon juice and mix well.
2) In a bowl take boiled and mashed potatoes, chopped green chilli, cornflour, salt and mix very well and make a dough for patties.
3) Divide the dough into 6 equal parts and make round balls.
4) Stuff each potato ball with the stuffing in the centre and seal. Give the shape of round patties.
5) Place all the patties on tawa and place tawa on high rack. Put both tawa and high rack inside the microwave. Select category and press start.
6) When beeps, turn over the patties and again press start. Serve stuffed aloo patties hot with mint chutney or tomato ketchup.

dF 10: Mushroom Rolls

- **Weight Limit**: 8 pcs
- **Utensil**: Multicook tawa, Low rack

Ingredients

List		Weight
For Mushroom Rolls	Weight Limit	8 pcs
For Stuffing	Mushroom (finely chopped)	1.5 cups
	Onions (chopped)	4 tbsp
	Green chilli (chopped)	2 nos.
	Butter (melted)	2 tbsps
	Fresh cream	4 tbsps
	Maida	1 tbsp
	Boiled peas	0.5 cup
	Lemon juice	1 tsp
	Coriander leaves (chopped)	3 tbsps
	Garlic paste	0.5 tsp
	Salt, black pepper powder	As per taste
For Rolls	Bread slices (white)	8 nos.
	Butter / oil	For basting
	Oil (for greasing)	0.5 tsp

Instructions

1) Pre-Preparation for Stuffing : In a Microwave safe glass bowl take butter, chopped cumin, green chilli and mushrooms. Mix and microwave 100% for 6 minutes. Add boiled peas, chopped coriander, garlic paste, fresh cream, lemon, salt and black pepper powder. Mix very well and microwave 100% for 3 minutes. Cover and keep aside.
2) Trim the sides of the bread slices with a knife. Flatten the bread slices with a rolling pin. Fill one portion of stuffing in the centre of flatten bread slice and roll tightly, covering the mixture. Keep aside for 5-7 minutes.
3) Grease the tawa with 0.5 tsp oil and keep the low rack and tawa inside the microwave. Select category and press start.
4) When beeps, cut the bread rolls from centre (into 2). Put them carefully on the tawa. Press start. Serve them hot with the chutney of your choice.

dF 11: Sabudana Vada

- **Weight Limit**: 0.1 ~ 0.3 kg

- **Utensil**: Multicook tawa, High rack

Ingredients

List		Weight-1	Weight-2	Weight-3
For Sabudana Vada	Weight Limit	0.1 kg	0.2 kg	0.3 kg
	Boiled potato	1 no.	2 nos.	3 nos.
	Sabudana (soaked for at least 1 hour)	0.5 cup	0.75 cup	1 cup
	Roasted and crushed peanuts	1 tbsp	2 tbsps	3 tbsps
	Chopped green chilli	1 no.	2 nos.	3 nos.
	Finely chopped ginger	0.25 tsp	0.5 tsp	1 tsp
	Fresh curry leaves	As required		
	Coriander leaves (chopped)	0.5 tbsp	1 tbsp	1.5 tbsps
	Salt	As per taste		

Instructions

1) In a bowl take all the ingredientgs and mix well. Make mixture for sabudana vada. Divide the dough in equal parts and make round and flat vadas.
2) Take the multicook tawa and keep the vadas on tawa. Keep tawa on high rack and keep inside the microwave. Select category and weight, then press start.
3) When beeps, turn the vadas and press start.
4) When beeps, again turn the vadas and press start. Serve them hot with the chutney of your choice.

dF 12: Fish Amritsari

- **Weight Limit**: 0.3 kg
- **Utensil**: Multicook tawa, High rack

Ingredients

List		Weight
For Fish Amritsari	Weight Limit	0.3 kg
	Boneless fish (cut into 50 mm pieces)	250 g
	Lemon juice	1 tsp
	Salt	0.25 tsp
For Batter	Egg (beaten)	1 no.
	Besan	2 tbsps
	Hung curd	2 tbsps
	Ajwain	1 tsp
	Ginger-garlic paste	0.5 tbsp
	Lemon juice	1 no.
	Salt, red chilli powder, garam masala, chaat masala, turmeric powder	As per taste
	Bread crumbs (for coating)	1 cup
	Oil (for basting)	1 tbsp

Instructions

1) Sprinkle salt and lemon juice on fish pieces. Rub well and keep aside for 5 minutes and wash well. Remove excess moisture with an absorbent kitchen towel.
2) In a bowl, mix together besan, hung curd, ginger garlic paste, ajwain, all the spices, beaten egg and lemon juice. Mix well and make a thick batter for marinade.
3) Rub this marinade well on the fish pieces and keep covered in refrigerator for atleast half an hour.
4) In a flat dish / plate take bread crumbs and coat the fish pieces one-by-one and keep on tawa. Keep tawa and high rack inside the microwave. Select category and press start.
5) When beeps, turnover fish pieces and sprinkle 1 tbsp oil on all pieces and press start.
6) Sprinkle chaat masala on fish pieces and serve them hot with lemon wedges and lachha onions.

dF 13: Batata Vada

- **Weight Limit**: 0.1 ~ 0.3 kg
- **Utensil**: Multicook tawa, Low rack

Ingredients

List		Weight-1	Weight-2	Weight-3
For Batata Vada	Weight Limit	0.1 kg	0.2 kg	0.3 kg
	Boiled potatoes	100 g	200 g	300 g
	Chopped coriander leaves	2 tbsps	3 tbsps	4 tbsps
	Chopped green chillies	2 nos.	2 nos.	3 nos.
	Chopped onion	1 no.	1.5 nos.	2 nos.
	Salt, red chilli powder, garam masala, chaat masala	As per taste		
	Roasted jeera	1 tsp	1.5 tsps	2 tsps

Instructions

1) Mix all the ingredients together. Make big vadas of the mixture.
2) Grease the multicook tawa with some oil. Arrange the vada on the tawa. Keep the tawa on low rack.
3) Select category and weight, then press start.
4) When beeps, turn over the vadas and press start.

dF 14: Pyaaz Pakora

- **Weight Limit**: 0.1 kg
- **Utensil**: Multicook tawa, Low rack

Ingredients

List		Weight
For Pyaaz Pakora	Weight Limit	0.1 kg
	Pyaaz (Cut into rings)	100 g
For Batter	Besan	1 cup (130 g)
	Water	200 mL
	Salt, Red chilli powder, haldi, garam masala	As per taste
	Oil	2 tsps

Instructions

1) In a bowl, add besan, haldi, red chilli powder, garam masala, salt. Mix well. Gradually add water in small amounts to make the batter for pakoras without any lumps. Grease the tawa with 2-3 drops oil.
2) Keep the tawa on low rack. keep inside microwave. Select menu and press start.(Preheat process)
3) When beeps, place all Pyaaz rings evenly coated with the batter on the tawa. Keep tawa on low rack. Press start.
4) When beeps, tum the pakoras and pour 2 tsp oil on all pakoras and again press start.
5) Serve hot with Chutney or Sauce. Cut into 3.8 cm (1.5") cubes

dF 15: Mirchi Vada

- **Weight Limit**: 0.2 kg
- **Utensil**: Multicook tawa, Low rack

Ingredients

List		Weight
For Mirchi Vada	Weight Limit	0.2 kg
	Mirchi (blanched)	200 g
For filling	Boiled potatoes	2 nos. (medium)
	Chopped green chillies	2 nos.
	Chopped coriander	1 tbsp
	Chopped ginger	1 tsp
	Salt, garam masala, red chilli powder	As per taste
For Batter	Besan	1 cup (130 g)
	Water	200 mL
	Salt, red chilli powder, haldi, garam masala	As per taste
	Oil	2 tsps

Instructions

1) In a bowl put boiled potatoes and mash them. Add chopped green chillies, coriander leaves, ginger, salt, garam masala and red chilli powder and mix well.
2) In another bowl put besan and all spices and gradually add water and make a smooth batter without any lumps.
3) Take Mirchi pieces and slit them from between add boiled mash potato in it and cover chillies with potato mixture and keep it in batter 10-15 min. Grease the tawa with 2-3 drops oil.
4) Keep the tawa on low rack. Select menu the press start.(Preheat process)
5) When beeps, keep the Mirchi Vada coated with the batter evenly on all sides on tawa and press start.

6) When beeps, turn the Mirchi Vada Sprinkle 2 tsp oil on all and press start. Serve hot with tomato ketchup.

dF 16: Aloo Bhaji

- **Weight Limit**: 0.1 kg
- **Utensil**: Multicook tawa, Low rack

Ingredients

List		Weight
For Aloo Bhaji	Weight Limit	0.1 kg
	Potato (cube)	100 g
For Batter	Besan	1 cup (130 g)
	Water	200 mL
	Salt, Red chilli powder, haldi, garam masala	As per taste
	Oil	2 tsps

Instructions

1) In a bowl, add besan, haldi red chilli powder, garam masala, salt. Mix well. Gradually add water in small amounts to make the batter for pakoras without any lumps. Grease the tawa with 2-3 drops oil.
2) Keep the tawa on low rack. keep inside microwave. Select menu and press start.(Preheat process)
3) When beeps, place all Potato pieces evenly coated with the batter on the tawa. Keep tawa on low rack. Press start.
4) When beeps, tum the pakoras and pour 2 tsp oil on all pakoras and again press start.
5) Serve hot with Chutney or Sauce.

dF 17: Soyabean Tikki

- **Weight Limit**: 5 pcs
- **Utensil**: Multicook tawa, High rack

Ingredients

List		Weight
For Soyabean Tikki	Weight Limit	5 pcs
	Boiled potato	1 no.
	Soyabean (soaked for at least 1 hour)	0.5 cup
	Roasted and crushed penuts	1 tbsp
	Chopped green chilli	1 no.
	Finely chopped ginger	0.25 tsp
	Fresh curry leaves	As required
	Coriander leaves (chopped)	0.5 tbsp
	Salt	As per taste

Instructions

1) In a bowl take all the ingredientgs and mix wen. Make mixture for Tikki. Divide the dough in equalparts and make round and flat Soyabean Tikki.
2) Take the multicook tawa and keep the Tikkis on tawa. Keep tawa on high rack and keep inside the microwave. Select menu and weight, then press start.
3) When beeps, tum the Tikkis and press start.
4) When beeps, again turn the Tikkis and press start. Serve them hot with the chutney of your choice.

dF 18: Oats Cutlet

- **Weight Limit**: 5 pcs
- **Utensil**: Multicook tawa, High rack

Ingredients

List		Weight
For Oats Cutlet	Weight Limit	5 pcs
	Boiled potato	1 no.
	Oats (roasted)	0.5 cup
	Grated carrot	0.5 cup
	Chopped green chilli	1 no.
	Finely chopped ginger	0.25 tsp
	Fresh curry leaves	As required
	Coriander leaves (chopped)	0.5 tbsp
	Salt	As per taste

Instructions

1) In a bowl take all the ingredientgs and mix well. Make mixture for Oats Tikki Divide the dough in equal parts and make round and flat Oats Tikki.
2) Take the multicook tawa and keep the Tikkis on tawa. Keep tawa on high rack and keep inside the microwave. Select menu and weight, then press start.
3) When beeps, tum the Tikkis and press start.
4) When beeps, again tum the Tikkis and press start. Serve them hot with the chutney of your choice.

dF 19: Methi Masala Vada

- **Weight Limit**: 5 pcs
- **Utensil**: Multicook tawa, High rack

Ingredients

List		Weight
For Methi Masala Vada	Weight Limit	5 pcs
	Boiled potato	1 no.
	Methi chopped	0.5 cup
	Chana dal soaked for 1 hr.	1 cup
	Chopped green chilli	1 no.
	Finely chopped ginger	0.25 tsp
	Fresh curry leaves	As required
	Coriander leaves (chopped)	0.5 tbsp
	Salt	As per taste

Instructions

1) In a bowl take all the ingredients and mix well. Make mixture for Methi Masala. Divide the dough in Equal parts and make it round and flat
2) Take the multicook tawa and high rack and keep inside the microwave. Select menu and weight, then press start.
3) When beeps, tum the vadas and press start.
4) When beeps, again tum the vadas and press start. Serve them hot with the chutney of your choice.

dF20: Poha Patties

- **Weight Limit**: 5 pcs
- **Utensil**: Multicook tawa, High rack

Ingredients

List		Weight
For Poha Patties	Weight Limit	5 pcs
	Boiled potato	1 no.
	Poha soaked	1 cup
	Yoghurt	2 tbsps
	Chopped green chilli	1 no.
	Finely chopped ginger	0.25 tsp
	Fresh curry leaves	As required
	Coriander leaves (chopped)	0.5 tbsp
	Salt	As per taste

Instructions

1) In a bowl take all the ingredients and mix well. Make mixture for Divide the dough in equal parts and make round and flat
2) Take the multicook tawa and high rack and keep inside the microwave. Select menu and weight, then press start.
3) When beeps, turn the Poha Patties and press start.
4) When beeps, again tum the Poha Patties and press start. Serve them hot with the chutney of your choice.

dF2 1: French Toast

- **Weight Limit**: 2 pcs
- **Utensil**: Multicook tawa, High rack

Ingredients

List		Weight
For French Toast	Weight Limit	2 pcs
	Egg	4 nos.
	Salt, haldi, garam masala, red chilli powder	As per taste

List		Weight
For filling	Boiled potatoes	2 nos. (medium)
	Chopped green chillies	2 nos
	Chopped coriander leaves	1 tbsp
	Chopped ginger	1 tsp
	Salt, garam masala, red chilli powder	As per taste
	Bread slices	4 nos.
	Oil	2 tsps

Instructions

1) In a bowl put boiled potatoes and mash them. Add chopped green chillies, coriander leaves, ginger, salt, garam masala and red chilli powder and mix well.
2) In another bowl mix Egg and all spices Take bread slices, cut them half diagonally, spread the filling on one part of the bread slice and cover with the other. Prepare all other slices using same procedure. Grease the tawa with 2-3 drops oil.
3) Keep the tawa on high rack. Select menu the press start.(Preheat process)
4) When beeps, keep the bread slices coated with the batter evenly on all sides on tawa and press start.
5) When beeps, turn the bread Toast Sprinkle 2 tsp oil on all and press start.
6) Serve hot with tomato ketchup.

dF22: Buff Vada

- **Weight Limit**: 5 pcs
- **Utensil**: Multicook tawa, High rack

Ingredients

List		Weight
For Buff Vada	Weight Limit	5 pcs
	Boiled potato	2 nos.
	Coconut (grated)	1 cup
	Roasted crushed peanuts	1 tbsp
	Chopped green chilli	1 no.
	Finely chopped ginger	0.25 tsp
	Fresh curry leaves	As required
	Coriander leaves (chopped)	0.5 tbsp
	Salt	As per taste

Instructions

1) In a bowl take all the ingredientgs and mix well. Make mixture for vada. Divide the dough in equal parts and make round and flat vada.
2) Take the multicook tawa and keep the vada on tawa. Keep tawa on high rack and keep inside the microwave. Select menu and weight, then press start.
3) When beeps, turn the vada and press start.
4) When beeps, again turn the vada and press start. Serve them hot with the chutney of your choice.

dF23: Palak Tikki

- **Weight Limit**: 5 pcs
- **Utensil**: Multicook tawa, High rack

Ingredients

List		Weight
For Palak Tikki	Weight Limit	5 pcs
	Boiled potato	1 no.
	Palak (chopped)	0.5 cup
	Corn flour	0.5 cup
	Chopped green chilli	1 no.
	Finely chopped ginger	0.25 tsp
	Fresh curry leaves	As required
	Coriander leaves (chopped)	0.5 tbsp
	Salt	As per taste

Instructions

1) In a bowl take all the ingredients and mix well. Make mixture for palak tikki. Divide the dough in equal parts and make round and flat.
2) Take the multicook tawa and keep the tikki on tawa. Keep tawa on high rack and keep inside the microwave. Select menu and weight, then press start.
3) When beeps, turn the tikki and press start.
4) When beeps, again turn the tikki and press start. Serve them hot with the chutney of your choice.

dF24: Corn Aloo Tikki

- **Weight Limit**: 5 pcs
- **Utensil**: Multicook tawa, High rack

Ingredients

List		Weight
For Corn Aloo Tikki	Weight Limit	5 pcs
	Boiled potato	1 no.
	Corn (boiled and crushed)	1 cup
	Corn flour	0.5 cup
	Chopped green chilli	1 no.
	Finely chopped ginger	0.25 tsp
	Fresh curry leaves	As required
	Coriander leaves (chopped)	0.5 tbsp
	Salt	As per taste

Instructions

1) In a bowl take all the ingredients and mix well. Make mixture for aloo tikki. Divide the dough in equal parts and make round and flat.
2) Take the multicook tawa and high rack and put tikkies on tawa and keep inside the microwave. Select menu and weight, then press start.
3) When beeps, turn the Tikki and press start.
4) When beeps, again turn the Tikki and press start. Serve them hot with the chutney of your choice.

dF25: Mix Veg Bhajia

- **Weight Limit**: 0.2 kg
- **Utensil**: Multicook tawa, Low rack

Ingredients

List		Weight
For Mix Veg Bhajia	Weight Limit	0.2 kg
	Potatoe (rings)	1 no.
	Cauliflower (florets)	25 g
	Onion (rings)	25 g

List		Weight
For Batter	Besan	1 cup (130 g)
	Water	200 mL
	Salt, red chilli powder, haldi, garam masala	As per taste
	Oil	2 tsps

Instructions

1) In a bowl, add besan, haldi, red chilli powder, garam masala, salt. Mix well. Gradually add water in small amounts to make the batter for pakoras without any lumps. Grease the tawa with 2-3 drops oil.
2) Keep the tawa on low rack. keep inside microwave. Select menu and press start. (Preheat process)
3) When beeps, place all mix veg. pieces evenly coated with the batter on the tawa. Keep tawa on low rack. Press start.
4) When beeps, turn the pakoras and pour 2 tsps oil on all pakoras and again press start.
5) Serve hot with Chutney or Sauce.

Health Plus

HP 1: Kala Chana

- **Weight Limit**: 0.1 ~ 0.5 kg
- **Utensil**: Microwave safe bowl

Ingredients

List		Weight-1	Weight-2	Weight-3	Weight-4	Weight-5
For kala chana	Weight Limit	0.1 kg	0.2 kg	0.3 kg	0.4 kg	0.5 kg
	Soaked Kala Chana	100 g	200 g	300 g	400 g	500 g
	Water	200 ml	400 ml	600 ml	800 ml	1000 ml
	Oil	1 tbsp	2 tbsps	3 tbsps	3.5 tbsps	4 tbsps
	Onion chopped	0.5 cup	1 cup	1.5 cups	2 cups	2 cups
	Salt, Chaat masala, Red chilli powder, hara dhania	As per taste				

Instructions

1) Soak chana overnight, in Microwave safe bowl, put soaked chanas and cover. Select category and weight, then press start.
2) When beeps, remove and drain the water. In a Microwave safe bowl add oil, chopped onion, salt, chaat masala, red chilli powder and hara dhania and press start. Mix well.
3) When beeps, add chanas to the Microwave safe bowl along with little water and press start. Mix well. Serve hot.

HP2: Karela Subzi

- **Weight Limit**: 0.3 kg
- **Utensil**: Microwave safe glass bowl, High rack, Multicook tawa

Ingredients

List		Weight
For karela subzi	Weight Limit	0.3 kg
	Chopped Karela	0.3 kg
	Oil	2 tbsps
	Chopped Onion	1 cup
	Water	1 cup
	Rai, Jeera, Hing and Haldi	For tempering
	Salt, Sugar, Garam Masala, Dhania, Jeera Powder	As per your taste
	Grated Coconut and Hara Dhania	For garnishing

Instructions

1) In a Microwave safe glass bowl take Oil add Rai, Jeera, Hing, Haldi and Chopped Onion. Select category and weight, then press start.
2) When beeps, add Chopped Karela, some water, salt, sugar, masala, dhania-jeera powder and cover. Press start.
3) When beeps, remove the bowl from microwave oven, transfer subzi to a multicook tawa, stir well. Place on High Rack
4) Press start.

NOTE

- Before cooking, scrap and rub the karela with salt and keep aside for 2-3 hours

HP3: Lemon Chicken

- **Weight Limit**: 0.1 ~ 0.5 kg

- **Utensil**: Microwave safe bowl

Ingredients

List		Weight-1	Weight-2	Weight-3	Weight-4	Weight-5
For lemon chicken	Weight Limit	0.1 kg	0.2 kg	0.3 kg	0.4 kg	0.5 kg
	Boneless Chicken	100 g	200 g	300 g	400 g	500 g
	Soya sauce	0.5 tbsp	1 tbsp	1.5 tbsps	2 tbsps	2.5 tbsps
	Corn flour	0.5 tbsp	1 tbsp	1.5 tbsps	2 tbsps	2.5 tbsps
	Water	0.5 cup	0.5 cup	0.5 cup	1 cup	1 cup
	Salt, pepper and sugar	As per taste				
	Garlic paste	1 tbsp	1.5 tbsps	2 tbsps	2.5 tbsps	3 tbsps
	Lemon juice	2 tsps	3 tsps	4 tsps	4 tsps	5 tsps
	Oil	0.5 tbsp	1 tbsp	1.5 tbsps	2 tbsps	2.5 tbsps

Instructions

1) Mix boneless chicken, soya sauce, salt and pepper, garlic paste and lemon juice in a bowl. Refrigerate for 0.5 hour.
2) In a Microwave safe bowl add oil, marinated chicken pieces, sugar, corn flour mixed with water. Cover. Select category and weight, then press start.
3) When beeps, mix well. Cover and press start. Allow to stand for 3 minutes.

HP4: Machi Kali Mirch

- **Weight Limit**: 0.1 ~ 0.5 kg
- **Utensil**: Microwave safe bowl

Ingredients

List		Weight-1	Weight-2	Weight-3	Weight-4	Weight-5
For machi kali mirch	Weight Limit	0.1 kg	0.2 kg	0.3 kg	0.4 kg	0.5 kg
	Pomfret (fish category)	0.1 kg	0.2 kg	0.3 kg	0.4 kg	0.5 kg
	Salt, Lemon Juice and Kali Mirch Powder	To marinate as per your taste				
	Oil, Chopped Onion, Chopped Tomatoes, Chopped Garlic	As required				

Instructions

1) Take Pomfret Slices as per weight (0.1 kg/ 0.2 kg/ 0.3 kg/ 0.4 kg/ 0.5 kg) and marinate with salt, lemon juice, and kali mirch powder (as per taste) for one hour.
2) In Microwave Safe bowl put oil, chopped onion, chopped tomatoes, chopped garlic. Select category and weight, then press start.
3) When beeps, open door and add marinated fish, salt to taste and some water. Cover and press start.
4) Give standing time for 5 minutes.

HP5: Soya Idli

- **Weight Limit**: 4 pcs, 8 pcs (40-50 g each)
- **Utensil**: Microwave safe bowl, Microwave safe idli stand

Ingredients

List		Weight
For soya idli	Weight Limit	4 pcs, 8 pcs (40-50 g each)
	Rice	100 g
	Urad	4 tbsps
	Soyabean	4 tbsps
	Water	As required
	Salt	As per taste

Instructions

1) Wash and soak rice, urad daal and soyabeans granules for 4 hours.
2) Grind, mix and ferment for 8 to 10 hours. Grind the mixture to paste consistency. (You an use the same batter for making 4, 5, 6, 7, 8 idlies)
3) Grease idli in Microwave safe bowl with little oil. Put idli batter in it. Add 0.5 cup water in Microwave safe bowl. Keep the idli stand in Microwave safe bowl and cover. Select category and number, then press start.

HP6: Nutrinuggets

- **Weight Limit**: 0.1 ~ 0.3 kg
- **Utensil**: Microwave safe bowl

Ingredients

List		Weight-1	Weight-2	Weight-3
For nutrinuggets	Weight Limit	0.1 kg	0.2 kg	0.3 kg
	Soaked and boiled nutrinuggets	50 g	100 g	150 g
	Potato	50 g	100 g	150 g
	Oil	1 tbsp	1.5 tbsps	2 tbspss
	Jeera	As per taste		
	Chopped onion	0.5 cup	1 cup	1.5 cups
	Tomato puree	2 tbsps	3 tbsps	4 tbsps
	Salt, garam masala, red chilli powder, haldi, dhania powder	As per taste		
	Water	1.5 cups	2 cups	2.5 cups
	Chopped coriander leaves	For garnishing		

Instructions

1) In a Microwave safe bowl add oil, jeera, onion. Select category and weight, then press start. Mix well.
2) When beeps, add tomato puree, nutrinuggets, potato, salt, red chilli powder, haldi, dhania powder and add 0.5 the amount of water mentioned per weight (For eg. For 100g, add 1 cup of water). Cover and press start. Mix well.
3) When beeps, add the remaining amount of water and press start. Mix well. Allow to stand for 3 minutes. Garnish with coriander leaves and serve with hot roti.

HP7: Curd Brinjal

- **Weight Limit**: 0.1 ~ 0.4 kg
- **Utensil**: Microwave safe bowl

Ingredients

List		Weight-1	Weight-2	Weight-3	Weight-4
For curd brinjal	Weight Limit	0.1 kg	0.2 kg	0.3 kg	0.4 kg
	Brinjal (cut into pieces)	100 g	200 g	300 g	400 g
	Curd	100 g	200 g	300 g	400 g
	Oil	1 tbsp	2 tbsps	3 tbsps	4 tbsps
	Curry leaves	A few sprigs			
	Mustard and cumin seeds	1 tsp	2 tsps	3 tsps	4 tsps
	Salt	As per taste			
	Chopped ginger	1 tsp	2 tsps	3 tsps	4 tsps

Instructions

1) In a Microwave safe bowl add oil and brinjal. Cover. Select category and weight, then press start.
2) When beeps, remove and in another Microwave safe bowl add oil, mustard and cumin seeds, curry leaves and chopped ginger. Press start.
3) When beeps, add brinjal, curd and salt. Mix well and press start.

HP8: Bathua Raita

- **Weight Limit**: 0.1 ~ 0.4 kg
- **Utensil**: Microwave safe bowl

Ingredients

List		Weight-1	Weight-2	Weight-3	Weight-4
For bathua raita	Weight Limit	0.1 kg	0.2 kg	0.3 kg	0.4 kg
	Chopped bathua	25 g	50 g	75 g	100 g
	Water	50 ml	75 ml	100 ml	125 ml
	Beaten curd	3 tbsps	4 tbsps	5 tbsps	6 tbsps
	Salt, roasted cumin seed powder	As per taste			

Instructions

1) In a Microwave safe bowl add chopped bathua leaves. Sprinkle some water and cover. Select category and weight, then press start.
2) When beeps, remove.
3) In a bowl add water, beaten curd, bathua leaves and mix well. Add salt and roasted cumin seed powder.
4) Mix well and refrigerate it for some time and serve.

HP9: Soyabean Curry

- **Weight Limit**: 0.2 kg
- **Utensil**: Microwave safe bowl

Ingredients

List		Weight
For soyabean curry	Weight Limit	0.2 kg
	Soyabean (soaked overnight)	200 g
	Oil	1.5 tbsps
	Chopped onions	1 cup
	Tomato puree	0.5 cup
	Chopped green chillies	1 tbsp
	Red chilli powder, garam masala, coriander powder, salt	As per taste
	Water	200 ml
	Coriander leaves	For garnishing

Instructions

1) In a Microwave safe bowl add oil, chopped onions. Select category and press start. Mix well.
2) When beeps, in the same bowl add tomato puree and haldi and press start. Mix well.
3) When beeps, add chopped green chillies, red chilli powder, garam masala, coriander powder, salt, soyabean and water. Press start.Garnish with coriander leaves and serve hot.

HP 10: Spinach Dal

- **Weight Limit**: 0.1 ~ 0.3 kg
- **Utensil**: Microwave safe bowl

Ingredients

List		Weight-1	Weight-2	Weight-3
For Spinach dal	Weight Limit	0.1 kg	0.2 kg	0.3 kg
	Dehusked soaked lentils (at least for 2 hours)	100 g	200 g	300 g
	Onions chopped	0.5 cup	1 cup	1 cup
	Spinach chopped	1 cup	1.5 cups	2 cups
	Oil	1 tbsp	2 tbsps	3 tbsps
	Cumin seeds	1 tsp	1 tsp	1.5 tsps
	Ginger and green chillies (chopped)	1 tbsp	2 tbsps	3 tbsps
	Water	300 ml	500 ml	700 ml
	Turmeric, salt	As per taste		
	Lemon juice	1 tsp	2 tsps	3 tsps
	Coriander leaves	2 tbsps	3 tbsps	4 tbsps

Instructions

1) In a Microwave safe bowl put soaked dal (lentils), water, salt, turmeric powder. Select category and weight, then press start.
2) When beeps, in another Microwave safe bowl put oil, chopped onions, cumin seeds, chopped ginger and green chillies, chopped spinach. Mix well and press start.
3) When beeps, mix well and add boiled lentils, add some water (if required). Mix again and press start.
4) Garnish with coriander leaves and serve hot.

HP 11: Moong Dal

- **Weight Limit**: 0.2 kg
- **Utensil**: Microwave safe bowl

Ingredients

List		Weight
For moong dal	Weight Limit	0.2 kg
	Moong Dal soaked in water (for 1 hour)	0.2 kg
	Water	400 ml
	Oil	2 tbsps
	Jeera	1 tsp
	Hari Mirch	2-3 nos.
	Curry Leaves	5-6 nos.
	Salt, Dhania-Jeera Powder, Haldi, Hing, Kasuri Methi, Lemon Juice, Hara Dhania	As per your taste

Instructions

1) Take 200 g dal in Microwave Safe bowl, add Water, Haldi and Hing.
2) Select category press start to cook.
3) When beeps, take another bowl add oil, jeera, hari mirch, curry leaves and press start.
4) When beeps, add dal, salt, dhania jeera powder, hara dhania, kasuri methi (optional), water (if required) and lemon juice and press start to cook.

HP 12: Leaf Rolls

- **Weight Limit**: 0.2 ~ 0.4 kg
- **Utensil**: Microwave safe bowl, Microwave safe flat glass dish

Ingredients

List		Weight-1	Weight-2	Weight-3
For leaf rolls	Weight Limit	0.2 kg	0.3 kg	0.4 kg
	Palak leaves	100 g	150 g	150 g
	Cabbage leaves	100 g	150 g	150 g

List		Weight-1	Weight-2	Weight-3
For filling	Boiled Veg (Potato, Capsicum, Carrot, French beans, sprouts)	1 cup	1.5 cups	1.5 cups
	Chopped onion	0.5 no.	1 no.	1 no.
	Salt, Chat masala, Lemon juice	As per your taste		

Instructions

1) In a bowl mix boiled vegetables, chopped onions, salt, chaat masala and lemon juice.
2) In Microwave safe bowl, add 0.5 cup water, Keep the leaves in Microwave safe flat glass dish. Keep the dish in Microwave safe bowl. Cover.
3) Select category and weight, then press start.
4) When beeps, remove the leaves from the bowl. Spread the filling on leaves and roll them. Make all the rolls in same way.

HP 13: Fish Bharta

- **Weight Limit**: 0.1 ~ 0.5 kg
- **Utensil**: Microwave safe bowl, and Microwave safe flat glass dish

Ingredients

List		Weight-1	Weight-2	Weight-3	Weight-4	Weight-5
For fish bharta	Weight Limit	0.1 kg	0.2 kg	0.3 kg	0.4 kg	0.5 kg
	Fish (Fillet)	100 g	200 g	300 g	400 g	500 g
	Mustard oil	1 tbsp	1 tbsp	1 tbsp	2 tbspss	2 tbspss
	Mustard seeds	1 tsp	1 tsp	1 tsp	2 tspss	2 tspss
	Chopped onion	1 cup	1 cup	1 cup	1 cup	1 cup
	Red chilli powder, haldi, garam masala, salt	As per taste				

Instructions

1) In a Microwave safe bowl add 0.5 cup water. Place the fish pieces on the Microwave safe flat glass dish. Cover. Keep the dish in Microwave safe bowl. Select category and press start.

2) When beeps, remove and mash the fish. In a Microwave safe bowl, add oil, chopped onions, mashed fish, red chilli powder, garam masala, haldi, salt. Cover and press start.

HP 14: Healthy Khichdi

- **Weight Limit**: 0.1 ~ 0.3 kg
- **Utensil**: Microwave safe bowl

Ingredients

List		Weight-1	Weight-2	Weight-3
For healthy khichdi	Weight Limit	0.1 kg	0.2 kg	0.3 kg
	Rice (soaked)	75 g	150 g	225 g
	Moong dal, washed (soaked)	25 g	50 g	75 g
	Desi ghee	0.5 tbsp	1 tbsp	1 tbsp
	Carrot (grated finely)	1 no.	2 nos.	2 nos.
	Soya granules (soaked)	2 tbsps	3 tbsps	4 tbsps
	Salt and pepper	As per taste		
	Water	300 ml	500 ml	750 ml

Instructions

1) In a Microwave safe bowl take soaked dal, rice and ghee. Also add grated carrot, soaked and drained soya granules and peas. Mix well. Select category and weight, then press start.
2) When beeps, mix, add water and salt. Mix again and press start
3) When beeps, stir and mash well. Add pepper powder and 0.5 cup water. Mix and cover and press start.
4) Serve hot with fresh curds.

HP 15: Oats Idli

- **Weight Limit**: 4 pc, 8 pc (40-50g) each
- **Utensil**: Microwave safe bowl, Microwave safe idli stand, Microwave safe glass bowl

Ingredients

List		Weight
For idli batter	Weight Limit	4 pc, 8 pc (40-50g) each
	Roasted and powdered oats	1 cup
	Semolina	0.5 cup
	Curd	0.5 cup
	Water	0.75 cup
	Salt	As per taste
	Soda bi carb	0.25 tsp
	Grated carrot	0.25 cup
	Chopped green chilies	2 nos.
	Oil	For greasing
For tempering	Mustard seeds	0.5 tsp
	Curry leaves	A few
	Dry red chillies	A few
	Oil	0.5 tbsp

Instructions

1) Mix al the ingredients of batter in a bowl. AIlow to stand for 10 minutes.
2) Grease Microwave safe idli stand and pour the batter (depending on the number youwant to cook).
3) Add 0.5 cup water to Microwave safe bowl. Keep the idli stand inside the bowl. Cover.
4) Select the category and number, then press start
5) When beeps, remove the idli from the stand.
6) Take a Microwave safe glass bowl, add oil, mustard seeds. curry leaves and dry redchilies. Press start. Mix with idli and serve. Add lemon juice (optional)

HP 16: Daliya Khichdi

- **Weight Limit**: 0.1 ~ 0.3 kg
- **Utensil**: Microwave safe bowl

Ingredients

List		Weight-1	Weight-2	Weight-3
For daliya khichdi	Weight Limit	0.1 kg	0.2 kg	0.3 kg
	Soaked dalia	0.25 cup	0.5 cup	0.75 cup
	Soaked moong dal	0.25 cup	0.5 cup	0.75 cup
	Grated carrot	1 no.	2 nos.	3 nos.
	Grated potato	0.5 no.	1 no.	1 no.
	Spinach (chopped)	0.5 cup	1 cup	1.5 cups
	Desi ghee	1 tbsp	1.5 tbsp	2 tbsps
	Turmeric powder, salt	As per taste		
	Water	300 ml	500 ml	750 ml

Instructions

1) In a Microwave safe bowl take soaked dalia, soaked moong dal, desi ghee, grated potato and grated carrot. Mix very well. Select category and weight, then press start.
2) When beeps, add water, chopped spinach, turmeric powder, salt. Mix well and cover. Press start
3) When beeps, mix wel.Add 0.5 cup water (or more). Press start. Serve withfresh curds.

HP 17: Fish Cutlet

- **Weight Limit**: 0.4 kg
- **Utensil**: Microwave safe glass bowl, High rack, Multicook tawa

Ingredients

List		Weight
For fish cutlet	Weight Limit	0.4 kg
	Fish fillet	350 g
	Boiled potato	2 nos.
	Bread crumbs	1 cup
	Oil	2 tbsps
	Chili powder, turmeric, ginger garlic paste. Salt	As per taste
	Garam masala powder	1 tsp
	Coriander leaves	A few sprigs

Instructions

1) In a Microwave safe glass bowl take fish fillet add 1 cup water. Select category and press start. Mash the fish.
2) Remove the bowl from microwave oven and add all the other ingredients except oil and mix well with boiled and mashed fish. Make cutlets and roll them in bread crumbs. Put some oil around the cutlets. Keep this on high rack
3) Press start.
4) When beeps, turn them over.
5) Press start.
6) Remove and serve with lemon wedges and mint chutney.

HP 18: Fish Masala

- **Weight Limit**: 0.2 ~ 0.5 kg
- **Utensil**: Microwave safe bowl

Ingredients

List		Weight-1	Weight-2	Weight-3	Weight-4
For fish masala	Weight Limit	0.2 kg	0.3 kg	0.4 kg	0.5 kg
	Pomphret pieces	200 g	300 g	400 g	500 g
	Onions	1 no.	2 nos.	2 nos.	3 nos.
	Tomato	1 no.	2 nos.	2 nos.	3 nos.
	Oil	1 tbsp	2 tbsps	2 tbsps	3 tbsps
	Chilli powder, Turmeric, Ginger garlic paste. Salt, Saunf powder	As per taste			
	Garam masala powder	As per taste			
	Dhania powder and jeera powde	As per taste			
	Coriander leaves	As per requirement			

Instructions

1) In Microwave safe bowl take oil and chopped onion. Select menu and weight, then press start.
2) When beeps, remove and add pomphret pieces and tomato. Press start.
3) When beeps, add all the other ingredients and water and mix well. Press start. Garnish with coriander leaves

HP 19: Fish Pulusu

- **Weight Limit**: 0.3 kg
- **Utensil**: Microwave safe glass bowl

Ingredients

List		Weight
For fish pulusu	Weight Limit	0.3 kg
	Koramatta ish pieces	300 g
	Oil	1.5 tbsp
	Ginger garlic paste	2 tbsps
	Methi seeds	1 tsp
	chopped onion	1 no.
	Fish masala	1 tbsp
	Tamarind pulp	50 g
	Red chili powder, dhaniya powder, haldi and salt	As per Taste
	Lemon Juice	As per taste

Instructions

1) In a Microwave safe glass bowl add oil, ginger garlic paste. methi seeds. fish pieces. lemon juice and cover. Select category and weight, then press start.
2) When beeps, mix well and add chopped onions and fish masala. Cover and press start.
3) When beeps, mix well and add tamarind pulp and press start. Allow to stand for 3 minutes.

HP20: Coconut Prawns

- **Weight Limit**: 0.1 ~ 0.3 kg
- **Utensil**: Microwave safe glass bowl

Ingredients

List		Weight-1	Weight-2	Weight-3
For coconut prawns	Weight Limit	0.1 kg	0.2 kg	0.3 kg
	Prawns	100 g	200 g	300 g
	Mustard oil	0.5 tbsp	1 tbsp	1.5 tbsps
	Rai paste	0.5 tbsp	1 tbsp	1.5 tbsps
	Green chilli paste	1 tsp	2 tsps	3 tsps
	Turmeric powder, sugar and salt	As per taste		
	Pulpy green coconut (remove the coconut water)	1 no.	1 no.	1 no.

Instructions

1) Marinate the prawn with rai paste, mustard oil, turmeric powder, green chilli paste, sugar and salt for 1 hour.
2) Take the coconut kernel and scoop out the creamy pulp with a spoon. Divide the coconut lengthwise into 2 halves.
3) Put the marinated prawns inside the kernel and cover with the other half kernel. Keep this in a Microwave safe glass bowl. Select category and weight and press start.

HP2 1: Crab Curry

- **Weight Limit**: 0.3 kg
- **Utensil**: Microwave safe glass bowl

Ingredients

List		Weight
For crab curry	Weight Limit	0.3 kg
	Crab pieces	250 g
	Ginger garlic paste	2 tbsps
	Water	1 cup
	Salt, dhania-jeera powder, garam masala, chilli powder, turmeric	As per taste
	Oil	2 tbsps
	Chopped onion	0.5 no.
	Coconut milk	2 tbsps

Instructions

1) In a Microwave safe glass bowl add oil, onion, ginger garlic paste. Select category and press start.
2) When beeps, remove, mix well add crab pieces and 1 cup water and press start.
3) When beeps, add coconut milk, salt, garam masala, dhania jeera powder. chilli powder, turmeric powder and press start. Mix well and serve hot with rice.

HP22: Mase Kallavan

- **Weight Limit**: 0.2 ~ 0.4 kg
- **Utensil**: Microwave safe bowl

Ingredients

List		Weight-1	Weight-2	Weight-3
For mase kallavan	Weight Limit	0.2 kg	0.3 kg	0.4 kg
	Fish pieces	200 g	300 g	400 g
	Oil	0.5 tbsp	1 tbsp	1 tbsp
	Ginger-garlic paste	1 tsp	2 tsps	3 tsps
	Tamarind paste	1 tbsp	1.5 tbsps	2 tbsps
	Salt, red chili powder, turmeric powder,coriander powder	As per taste		
	Hing	A pinch		
	Green chilli (chopped)	1 no.	1 no.	2 nos.
	Coriander leaves (chopped)	1 tbsp	2 tbsps	3 tbsps
	Garlic (chopped)	1 tsp	1.5 tsps	2 tsps
	Coconut milk	0.5 cup	1 cup	1.5 cups

Instructions

1) Wash. clean and pat dry fish with kitchen towel. In a bowl mix together ginger- garlic paste, tamarind paste, salt, red chili powder, coriander powder, turmeric powder. Mix and rub this marinade on fish pieces and keep aside for atleast 15 minutes.
2) In a Microwave safe bowl take oil, hing, chopped garlic, coriander and green chilli and mix. Select category and weight, then press start.
3) When beeps. add the marinated fish to the Microwave safe bowl. Mix well, sprinkle water on top and cover and press start.
4) When beeps, mix and add coconut milk to the fish. Mix well again and press start. Serve more kalavan hot with steamed rice.

HP23: Sabudana Khichdi

- **Weight Limit**: 0.1 ~ 0.5 kg
- **Utensil**: Microwave safe bowl

Ingredients

List		Weight-1	Weight-2	Weight-3	Weight-4	Weight-5
For Sabudana khichdi	Weight Limit	0.1 kg	0.2 kg	0.3 kg	0.4 kg	0.5 kg
	Sabudana (soaked for 2 hours)	100 g	200 g	300 g	400 g	500 g
	Oil	0.5 tbsp	1.5 tbsps	2 tbsps	2.5 tbsps	3 tbsps
	Rai, salt. lemon juice, chopped green chilies	As Per Taste				
	Potatoes (boiled and chopped)	1 no.	2 nos.	3 nos.	4 nos.	5 nos.
	Coriander leaves	A few springs				

Instructions

1) In a Microwave safe bowl add oil. rai. green chilies and coriander leaves. Mix. Select category and weight, then press start.
2) When beeps, mix, add boiled potatoes, soaked sabudana. Mix and press start. Squeeze lemon juice and serve.

HP24: Home Made Cereal

- **Weight Limit**: 0.1 ~ 0.3 kg
- **Utensil**: Microwave safe glass bowl

Ingredients

List		Weight-1	Weight-2	Weight-3
For home made cereal	Weight Limit	0.1 kg	0.2 kg	0.3 kg
	Rice	50 g	100 g	150 g
	Moong daal	50 g	100 g	150 g
	Salt, jeera powder, almonds (optional)	As per taste		
	Ghee	1 tsp	2 tsps	3 tsps
	Groundnuts	1 tbsp	2 tbsps	3 tbsps
	Poha	1 tbsp	2 tbsps	3 tbsps
	Daliya	1 tbsp	2 tbsps	3 tbsps

Instructions

1) Soak rice for 1 hour. In a Microwave safe glass bowl put all the ingredients. Keep it in microwave. Select category and weight, then press start.
2) When beeps, remove and grind it in a mixer to a powder. You can store this mixture in a fridge. Take 2 tbsps of this powder, add water, salt, jeera powder and mix. Put this in microwave and press start.
3) When beeps, remove it.

HP25: Khichdi

- **Weight Limit**: 0.1 ~ 0.3 kg
- **Utensil**: Microwave safe glass bowl

Ingredients

List		Weight-1	Weight-2	Weight-3
For Khichdi	For	0.1 kg	0.2 kg	0.3 kg
	Soaked rice	50 g	75 g	100 g
	Moong daal	25 g	50 g	75 g
	Salt, jeera powder (optional)	As per taste		
	Ghee	1 tsp	2 tsps	3 tsps
	Water	200ml	400 ml	600 ml

Instructions

1) Soak rice 1 hour. In a Microwave safe glass bowl put ghee, rice, daal and water. Keep it in microwave. Select category and weight, then press start..

2) When beeps, remove and add salt, jeera powder and cover. Put this in microwave and press start.
3) When beeps. remove and add some water if required. Mix well and put this in microwave and press start.

Soup

So 1: Sweet Corn Soup

- **Weight Limit**: 0.3 kg
- **Utensil**: Microwave safe glass bowl

Ingredients

List		Weight
For Sweet Corn Soup	Weight Limit	0.3 kg
	Sweet Corn	200 g
	Water	300 ml (1.5 cups)
	Oil	1 tsp
	Cornflour	2 tbsps and 0.5 cup water
	Salt, Sugar and Kali Mirch and Green Chilli	As per taste

Instructions

1) Grind sweet corn with water and put in microwave safe Glass Bowl. Select category and press start.
2) When beeps, remove, in another microwave safe glass bowl put oil, green chilli and press start.
3) When beeps, add corn mixture in it. Mix cornflour with 0.5 cup water and mix with it. Add salt, sugar, pepper and press start.

So2: Mushroom Soup

- **Weight Limit**: 0.3 kg
- **Utensil**: Microwave safe glass bowl

Ingredients

List		Weight
For Mushroom Soup	Weight Limit	0.3 kg
	Mushroom	120 g
	Potato	1 No.
	Cabbage	50 g
	Onion	1 small
	Water	300 ml (1.5 cups)
	Salt, Pepper	As per taste
	Oil	1 tsp
	Grated cheese	As per requirement

Instructions

1) In microwave safe glass bowl add potato in small pieces, chopped cabbage, onion and mushrooms with water. Select category and press start.
2) When beeps, remove the bowl. Allow to cool and separate the mushrooms and grind the remaining stock and strain it..
3) In a microwave safe glass bowl, add oil, chopped mushrooms, salt and pepper and then add the stock and press start. Garnish with grated cheese and serve.

503: Wonton Soup

- **Weight Limit**: 0.6 kg
- **Utensil**: Microwave safe glass bowl

Ingredients

List		Weight
For Wonton Soup	For	0.6 kg
	Chopped cabbage, carrot, capsicum, french beans	200 g (Total)
	Ginger paste	2 tsps
	Garlic paste	2 tsps
	Spinach in pieces	10 leaves
	Oil	1 tsp
	Salt, pepper	As per taste
	Water	600 ml (3 cups)
	Ready wonton	6-7 pieces

Instructions

1) In Microwave safe glass bowl add oil and vegetables, ginger-garlic paste.Select category and press start.
2) When beeps, add salt, pepper, water and palak (in pieces). Mix well and put in microwave and press start.
3) When beeps, mix well and press start. Add wonton and serve.

   How to make Wonton : Maida -1 cup, Salt - 1 pinch, Oil - 1 tsp

   Method: Mix all the ingredients in the bowl and make dough withtoo warm water. After that cover the bowl and leave the mixture for 10-15 minutes.

   For Stuffing:Cabbage, carrot, capsicum which is cut in long pieces

   Method : Mix all the ingredients for stuffing. Make a small puree ofwonton and put the small quantity of stuffing in between them andthen cover the puree and press it.

S04: Chicken Shorba

- **Weight Limit**: 0.6 kg
- **Utensil**: Microwave safe glass bowl

Ingredients

List		Weight
For Chicken Shorba	Weight Limit	0.6 kg
	Boneless chicken	300 g
	Oil	0.5 tbsp
	Chopped garlic	2 tsps
	Salt and pepper powder	As per taste
	Maida	3 tbsps
	Water	600 ml (3 cups)
	Fresh cream	For garnishing

Instructions

1) In a microwave safe bowl add chicken pieces, chopped garlic and water. Select category and press start.
2) When beeps, remove and strain stock. In another microwave safe glass bowl add oil, cumin seeds and maida and press start.
3) When beeps, add the chicken stock, salt, pepper and press start. Garnish with fresh cream and serve hot..

505: Tamator Shorba

- **Weight Limit**: 0.6 kg
- **Utensil**: Microwave safe glass bowl

Ingredients

List		Weight
For Tamator Shorba	Weight Limit	0.6 kg
	Chopped tomato	300 g
	Oil	1 tbsp
	Ginger garlic paste	2 tbsps
	Jeera, bay leaf, salt, garam masala,sugar	As per taste
	Water	600 ml (3 cups)
	Coriander leaves	For garnishing

Instructions

1) In a microwave safe glass bowl add tomatoes cut into quarters with water, select category and press start.
2) When beeps, grind and strain the whole stock.
3) In another microwave safe glass bowl add oil, ginger garlic paste, jeera, bay leaf and press start. Mix well.
4) When beeps, add the strained stock, season with salt, garam masala and press start. Add sugar if very sour. Garnish with coriander leaves and serve hot.

So 6: Rasam

- **Weight Limit**: 0.6 kg
- **Utensil**: Microwave safe bowl

Ingredients

List		Weight
For Rasam	Weight Limit	0.6 kg
	Tomato	300 g
	Tamarind pulp	50 g
	Salt and Jaggery	As per taste
	Green chillies	2 nos.
	Coriander and curry leaves	For garnishing
	Chopped garlic	2-3 flakes
	Coriander seeds, Cumin seeds, Cinnamon, Hing	As per taste
	Water	600 ml (3 cups)
	Oil	1 tbsp

Instructions

1) In a Microwave safe bowl add chopped tomato and water. Select menu and press start..
2) When beeps, remove and cool. Grind and strain it.
3) In a Microwave safe bowl add oil, coriander seeds, cumin seeds, cinnamon, hing,chopped garlic, green chillies, salt and jaggery and strained tomato stock. Press start.
4) When beeps, strain it again and add more water (if required), tamarind pulp. Press start.
5) Garnish with coriander and curry leaves and serve.

So 7: Mulligatawny Soup

- **Weight Limit**: 0.6 kg
- **Utensil**: Microwave safe glass bowl

Ingredients

List		Weight
For Mulligatawny Soup	Weight Limit	0.6 kg
	Cooked rice	50 g
	Dehusked lentil	30 g
	Apples (pealed and sliced)	0.5 no.
	Carrot	50 g
	Onion	50 g
	Veg stock/water	600 ml (3 cups)
	Salt and Pepper	To taste
	Butter	1 tsp
	Curry powder	1 tsp
	Lemon juice	1 tsp

Instructions

1) In microwave safe glass bowl add butter, carrot, onion and apples. Mix well. Select category and weight and press start.
2) When, beep, mix well, add cooked rice, lentils and water and press start.
3) When, beep, mix well, allow to cool. Blend and strain. In the same microwave safe glass bowl add the strained stock, salt, pepper, curry powder and lemon juice. Press start.

So 8: Hot and Sour Soup

- **Weight Limit**: 0.6 kg
- **Utensil**: Microwave safe glass bowl

Ingredients

List		Weight
For Hot and Sour Soup	Weight Limit	0.6 kg
	Water	600 ml (3 cups)
	Chilli sauce	1 tbsp
	Soya sauce	2 tbsps
	Vinegar	2 cups
	Chopped vegetables (capsicum,spring onions, carrots, cabbage)	100 g
	Tomato sauce	2 tbsps
	Cornflour	2 tbsps + 0.5 cup water
	Salt, pepper	As per taste
	Paneer	50 g

Instructions

1) In a microwave safe glass bowl add water, chili sauce, soya sauce, vinegar, sugar,salt, pepper powder. Select menu and press start.
2) When beeps, stir well and add all the chopped vegetables, except paneer. Press start.
3) When beeps, stir well and add corn flour, tomato sauce, paneer pieces and press start.

509: Tomato Soup

- **Weight Limit**: 0.6 kg
- **Utensil**: Microwave safe glass bowl

Ingredients

List		Weight
For Tomato Soup	Weight Limit	0.6 kg
	Chopped Tomato	100 g
	Chopped Carrot	25 g
	Chopped Onion	1 small
	Chopped Ginger, Garlic	1 tsp
	Salt, Sugar, Pepper	As per your taste
	Cornflour and Oil / Butter	2 tbsps / 1 tsp
	Water	600 ml (3 cups)

Instructions

1) In a Microwave safe glass bowl add chopped tomato, chopped onion, chopped carrot, chopped ginger-garlic along with water. Keep in Microwave. Select menu and press start.
2) When beeps, grind and strain it.
3) In another microwave safe glass bowl add oil/butter and stock and then put the bowl in microwave and press start. When beep, add sugar, salt, black pepper as per taste and cornflour paste which is made up by mixing the half cup of coldwater. Stirwell and press start.
4) Garnish with bread croutons, coriander (green dhania) and fresh cream and serve hot.

So 10: Palak Makai Shorba

- **Weight Limit**: 0.6 kg
- **Utensil**: Microwave safe glass bowl

Ingredients

List		Weight
For Palak Makai Shorba	Weight Limit	0.6 kg
	Palak (chopped)	200 g
	Water	600 ml (3 cups)
	Maggie tastemaker	1 cube
	Corn Niblets	0.5 cup
	Chopped onion	0.5 cup
	Jeera	1 tsp
	Butter	1 tbsp
	Milk	0.25 cup

Instructions

1) In a microwave safe glass bowl add chopped palak and little water. Select menu and press start.
2) When beeps, grind the palak,
3) In another microwave safe glass bowl add butter, jeera, chopped onions. Press start.
4) When beeps, remove and add palak and water, milk, corn niblets and Maggie tastemaker. Press start.

5o 1 1: Chicken Soup

- **Weight Limit**: 0.3 kg
- **Utensil**: Microwave safe glass bowl

Ingredients

List		Weight
For Chicken Soup	For	0.3 kg
	Boneless Chicken	300 g
	Ginger Paste	1 tsp
	Garlic paste	1 tsp
	Salt and Pepper Powder	As per taste
	Cornflour Paste	2 tbsp (mixed with 0.5 cup water)
	Oil	1 tsp
	Water	600 ml / 3 cups

Instructions

1) In Microwave safe glass bowl put water and add chicken pieces. Select category and press start.
2) When beeps remove the bowl.
3) In another microwave safe glass bowl add oil, ginger-garlic paste,chicken stock, salt, pepper, cornflour paste, green chillies and 1 cup water. Press start.

So 12: Tom Yum Kung

- **Weight Limit**: 0.6 kg
- **Utensil**: Microwave safe glass bowl

Ingredients

List		Weight
For Tom Yum Kung	Weight Limit	0.6 kg
	Small sized prawns	10-12 nos.
	Mushrooms (sliced)	5-6 nos.
	Lemon grass stem	4 inch stalk
	Lime leaves	5-6 nos.
	Coriander fresh chopped	A few sprigs
	Fish sauce	2 tbsps
	Thai red curry paste	2 tbsps
	Lemon juice	1 tbsp
	Veg stock / chicken stock	600 ml (3 cups)
	Green / red chillies	3 nos.
	Salt and pepper	To taste

Instructions

1) In a microwave safe glass bowl put head and shells of prawns, green / red chillies (cut into 2), salt, roughly crushed lemon grass, lime leaves and stock. Mix well.Select category and press start.
2) When beeps, strain the stock. Add cleaned prawns, fish sauce, pepper,thai red curry paste. Stir well and press start.
3) Add lemon juice and adjust the seasoning. Serve pipping hot.

So 13: Dal Shorba

- **Weight Limit**: 0.6 kg
- **Utensil**: Microwave safe glass bowl

Ingredients

List		Weight
For Dal Shorba	Weight limit	0.6 kg
	Soaked Urad dal (dehusked)	0.5 cup
	Olive oil	1 tsp
	Chopped green chillies	2 nos.
	Ginger paste	1 tsp
	Garlic paste	1 tsp
	Chopped onion	1 no.
	Salt turmeric powder, onion,powder, sugar	As per taste
	Lemon juice	As per taste
	Water	600 ml (3 cups)

Instructions

1) In a Microwave safe glass bowl add oil, green chillies, ginger paste, garlic paste. Mix well.
2) Select menu and press start.
3) When beeps, mix well and add onion and add all spices. Press start.
4) When beeps, mix well and add dal and water also. Press start. Strain the stock.
5) Add 100 ml hot water and spices as per taste ando serve

So 14: Shahi Shorba

- **Weight Limit**: 0.6 kg
- **Utensil**: Microwave safe glass bowl

Ingredients

List		Weight
For Shahi Shorba	Weight Limit	0.6 kg
	Onions (finely chopped)	2 nos.
	Walnuts (coarsely chopped)	0.25 cup
	Mint paste	1 tbsp
	Whole wheat flour	2 tbsps
	Butter	2 tbsps
	Salt, pepper , garam masala	As per taste

Instructions

1) In a microwave safe glass bowl take butter and chopped onion. Mix well. Select menu and press start.
2) When beeps, stir well. Add whole wheat flour, mint paste, coarsely chopped walnuts and mix well. Press start.
3) When beeps, mix and add water. Mix well so that no lumps are formed. Add seasoning. Press start. Serve hot.

So 15: Bombay Curry Soup

- **Weight Limit**: 0.6 kg
- **Utensil**: Microwave safe glass bowl

Ingredients

List		Weight
For Bombay Curry Soup	Weight Limit	0.6 kg
	Water	500 ml (2.5 cups)
	Soaked masoor dal (dehusked)	200 g
	Chopped tomato	2 nos.
	Chopped onions	1 no.
	Crushed garlic	3-4 cloves
	Oil	1 tbsp
	Curry powder	As per taste
	Salt, red chilli powder	As per taste
	Coriander leaves	For garnishing

Instructions

1) In a microwave safe glass bowl add soaked masoor dal, tomato and water. Select menu and press start.
2) When beeps, remove and allow the dal to cool. Grind it in a mixer and strain.
3) In another microwave safe glass bowl, add oil, crushed garlic, chopped onion. Press start.
4) When beeps, mix and add strained dal stock, salt, chilli powder, curry powder and add 150 ml of water. Mix well and press start. Garnish with coriander leaves and serve hot.

So 16: Badam Soup

- **Weight Limit**: 0.6 Kg
- **Utensil**: Microwave safe glass bowl

Ingredients

List		Weight
For Badam Soup	Weight Limit	0.6 kg
	Badam (soaked and blanched)	50 g
	Fresh basil leaves (Tulsi)	8-10 nos.
	Water	600 ml (3 cups)
	Cinnamon	25 mm stick
	Elaichi (green)	2-3 nos.
	Cloves	2-3 nos.
	Sugar	0.5 tbsp
	Cornflour	0.5 tbsp
	Salt and pepper	As per taste

Instructions

1) Grind soaked and blanched badam and basil leaves to a fine paste, adding 0.5 cup water. Take out in a microwave safe glass bowl. Add 3 cups water and stirwell. Add cinnamon, elaichi and cloves.
2) Select category and press start.
3) When beeps, stir and strain the soup and sieve.Take the strained soup in a microwave safe glass bowl. Add salt and peppers and cornflour (mixed with 0.5 cup water) and press start. Serve hot.

So 17: Limbu Dhania Shorba

- **Weight Limit**: 0.6 kg
- **Utensil**: Microwave safe glass bowl

Ingredients

List		Weight
For Limbu Dhania Shorba	Weight Limit	0.6 kg
	Water	600 ml (3 cups)
	Oil	0.5 tbsp
	Shredded cabbage	1 cup
	Chopped carrot	0.5 cup
	Celery	0.5 cup
	Spring onions	0.5 cup
	Ginger (grated)	1 tbsp
	Chopped garlic	3 nos.
	Bayleaf	2 nos.
	Cloves	2 nos.
	Pepper corns	3 nos.
	Besan	2 tbsps (dissolved in 0.25 cup water)
	Lemon juice	2 tbsps
	Coriander leaves (chopped)	0.5 cup
	Salt	As per taste

Instructions

1) In a microwave safe glass bowl add oil, cabbage, carrot, celery, spring onions,ginger, garlic, bayleaves, cloves, peppercorns. Mix well. Select menu and press start.
2) When beeps, mix well and add water and press start. When beeps, add besan paste, lemon juice, coriander leaves, salt. Mix well and press start. Garnish with coriander leaves and serve hot.

So 18: Mutton Shorba

- **Weight Limit**: 0.6 kg
- **Utensil**: Microwave safe glass bowl

Ingredients

List		Weight
For Mutton Shorba	Weight Limit	0.6 kg
	Boneless mutton	300 g
	Water	600 ml (3 cups)
	Oil	1 tbsp
	Chopped onion	1 no.
	Chopped garlic	3 cloves
	Chilli flakes salt	As per taste
	Chopped and skinned tomato	2 nos.
	Cinnamon	12 mm Stick
	Cardamom	1 nos.
	Cumin seeds	1 tsp
	Saffron	A few
	Dry mint leaves	0.5 cup
	Beaten curd	0.5 cup

Instructions

1) In a microwave safe glass bowl add oil, onion, garlic mutton and chilli flakes, salt. Mix well and cover.
2) Select menu and press start.
3) When beeps, mix well and add water, tomato, cinnamon, cardamom, cumin seeds, salt, saffron and dry mint leaves. Mix well and press start.
4) When beeps, remove the bowl and allow to cool. Grind it and add curd. Press start.

Continental

Co 1: Pasta

- **Weight Limit**: 0.1 ~ 0.3 kg
- **Utensil**: Microwave safe glass bowl, Microwave safe flat glass dish, High rack

Ingredients

List		Weight-1	Weight-2	Weight-3
For Penne Pasta	Weight Limit	0.1 kg	0.2 kg	0.3 kg
	Penne pasta	100 g	200 g	300 g
	Butter	1 tbsp	2 tbsps	3 tbsps
	Chopped onion	0.5 cup	1 cup	1.5 cups
	Chopped garlic	1 tbsp	1.5 tbsps	2 tbsps
	Chopped Palak leaves	50 g	75 g	100 g
	Water	400 ml	800 ml	1200 ml
	Cream	0.25 cup	1 cup	1.5 cups
	Grated Cheese	2 tbsps	3 tbsps	4 tbsps
	Nutmeg Powder, oregano, salt and pepper	As per taste		

Instructions

1) In a microwave glass bowl take pasta, add water (sufficient to boil the pasta) and few drops of oil. Select menu and weight, then press start.
2) When beeps, drain water from the pasta, wash and separate under running water. In a microwave safe flat glass dish add butter, onion, garlic and palak. Mix wel l,then press start.
3) When beeps, add cream, nutmeg powder, oregano, salt, pepper, boiled pasta. Mix well and sprinkle grated cheese. Keep the dish on high rack, then press start.

C02: Veg Au Gratin

- **Weight Limit**: 0.2 kg
- **Utensil**: Microwave safe flat glass dish, High rack

Ingredients

List		Weight
For Veg Au Gratin	Weight Limit	0.2 kg
	Mix Vegetables (cut gajar, gobhi, French beans, sweet corns, peas etc.)	200 g
	Maida	2 tbsps
	Butter	2 tsps
	Milk	0.5 cup
	Grated Cheese	5 tbsps
	Salt, Pepper	As per taste

Instructions

1) In a microwave glass bowl take vegetables and add 400 ml water. Select menu, then press start.
2) When beeps, remove microwave safe glass bowl and transfer boiled Vegetables to microwave safevflat glass dish add milk, maida, salt and pepper. Mix well. Cover, then press start.
3) When beeps, mix well and spread grated cheese on it, place the dish on high rack, then press start.

C03: Baked Mushrooms

- **Weight Limit**: 0.1 ~ 0.3 kg
- **Utensil**: Microwave safe flat glass dish, High rack

Ingredients

List		Weight-1	Weight-2	Weight-3
For Baked Mushrooms	Weight Limit	0.1 kg	0.2 kg	0.3 kg
	Mushrooms	50 g	100 g	150 g
	White Sauce	50 g	100 g	150 g
	Cheese (grated), Salt, pepper	As per taste		

Instructions

1) In microwave flat glass dish put all the ingredients except cheese, mix well.
2) Select menu and weight, then press start.
3) When beeps, keep on high rack. Spread grated cheese on the top of the mixture, then press start.

C04: Lasaneya

- **Weight Limit**: 0.3 kg

- **Utensil**: Microwave safe flat glass dish and High Rack

Ingredients

List		Weight
Lasaneya	Weight Limit	0.3 kg
	Lasagne sheets (cooked)	150 g
	White sauce	1 cup
	Pizza sauce	0.5 cup
	Mix veg (boiled) - Egg plant, Zucchini, Broccoli, Mushrooms, Sweet corns	2 cups
	Oil	2 tbsps
	Oregano, Salt and Black Pepper	As per taste
	Grated cheese	5 tbsps

Instructions

1) Except lasagne and cheese add all the ingredients in microwave safe flat glass dish.Select menu, then press start.
2) When beeps, remove the ingredients and in same dish arrange lasagna sheets in the bottom. Then spread vegetable mixture on it and make layers of sheets and vegetable mixture. then press start.
3) When beeps, spread the grated cheese and keep the glass dish on high rack, then press start.

C05: Macaroni

- **Weight Limit**: 0.1 ~ 0.3 kg
- **Utensil**: Microwave safe bowl

Ingredients

List		Weight-1	Weight-2	Weight-3
For Macaroni	Weight Limit	0.1 kg	0.2 kg	0.3 kg
	Macaroni	100 g	200 g	300 g
	Hot Water	400 ml	800 ml	1200 ml
	Butter	1 tbsp	2 tbsps	3 tbsps
	Spring Onion Chopped	1 tbsp	2 tbsps	3 tbsps
	Garlic Chopped	1 tsp	2 tsps	3 tsps
	Mushroom Chopped	3 nos.	4 nos.	5 nos.
	Tomato Sauce	1 tbsp	2 tbsps	3 tbsps
	Chilli Sauce	1 tsp	2 tsps	3 tsps
	Salt, Pepper and Oregano	As per taste		

Instructions

1) In microwave safe bowl take Macaroni with water. Select menu and weight, then press start.
2) When beeps, drain water from it. In microwave safe bowl add all the ingredients with boiled Macaroni. mix well, then press start.

C06: Thai Chicken

- **Weight Limit**: 0.5 kg
- **Utensil**: Microwave safe bowl

Ingredients

List		Weight
For Thai Chicken	Weight Limit	0.5 kg
	Boneless chicken	500 g
	Red curry paste	2 tbsps
	Sugar	1 tsp
	Soya sauce	2 tbsps
	Salt	As per taste
	Chopped garlic	1 tsp
	Blanched Broccoli (florets)	1 cup
	Peanuts (Roasted and crushed)	0.25 cup
	Oil	2 tbsps
	Red chilli paste	1 tsp
For Sauce	Butter	2 tbsps
	Maida	2 tbsps
	Milk	1 tbsp
	Salt and pepper	As per taste

Instructions

1) In a microwave safe bowl put oil, garlic, sugar, soya sauce, red curry paste,broccoli, chicken pieces, mix well. Select menu, then press start.
2) When beeps, remove. Add red chilli paste, crushed peanuts. Add sauce of milk, maida, butter, salt and pepper. Mix well then press start.

[o]: Mediterranean Crostini

- **Weight Limit**: 0.3 kg
- **Utensil**: Low rack

Ingredients

List		Weight
For Mediterranean Crostini	Weight Limit	0.3 kg
	French bread	3 slices
	Black olives (sliced)	0.25 cup
	Cheese (grated)	0.5 cup
	Butter	2 tbsps
	To be mixed together for the marinated tomatoes :	
	Tomatoes (sliced)	2 nos.
	Basil leaves (freshly chopped)	1 tsp
	Garlic (chopped)	1 tsp
	Olive oil	2 tsps
	Salt and freshly crushed pepper corns	As per taste

Instructions

1) In a bowl, put all the ingredients of marinade and mix well. Keep it for 15-20 minutes.
2) Butter the bread slices. Top each slice with 2-3 slices of marinated tomatoes. Put chopped olives and sprinkle grated cheese on top.
3) Select the menu, then press start. (Preheat process.)
4) When beeps, keep the bread slices on low rack. Keep the rack in microwave and then press start.

C08: Chilli Veg

- **Weight Limit**: 0.1 ~ 0.3 kg
- **Utensil**: Microwave safe bowl

Ingredients

List		Weight-1	Weight-2	Weight-3
For Chilli Veg	Weight Limit	0.1 kg	0.2 kg	0.3 kg
	Paneer pieces	100 g	200 g	300 g
	Chopped Capsicum and onion	0.5 cup	1 cup	1.5 cups
	Chopped green chillies	1 no.	2 nos.	3 nos.
	Ginger garlic paste	0.5 tbsp	1 tbsp	1.5 tbsps
	Oil	0.5 tsp	1 tsp	1.5 tsps
	Soya sauce	1 tsp	1.5 tsps	2 tsps
	Cornflour	1 tbsp	1.5 tbsps	2 tbsps
	Green chilli sauce	1 tbsp	2 tbsps	3 tbsps
	Salt and Pepper	As per your taste		
	Water	0.5 cup	1 cup	1 cup
	Ajinomoto (optional)	A pinch		

Instructions

1) In a microwave safe bowl add oil, onions, green chillies, ginger garlic paste and capsicum. Mix well and cover.
2) Select menu and weight then press start
3) When beeps, mix well and add paneer pieces, soya sauce, chilli sauce,cornflour (mixed with 0.5 cup water), water, salt, pepper and ajinomoto, then press start.
4) Mix well and serve.

[o9: Potato Dumpling

- **Weight Limit**: 0.3 kg
- **Utensil**: Microwave safe bowl, Microwave safe flat glass dish

Ingredients

List		Weight
For Potato dumpling	Weight Limit	0.3 kg
	Maida	3-4 tbsps
	Boiled and grated potato	100 g
	Grated paneer	75 g
	Salt, pepper, nutmeg powder	As per taste
	Finely chopped spinach	1 cup
	Butter and finely chopped garlic	1 tbsp each
	Pizza sauce	4 tbsps

Instructions

1) Mix all the ingredients together for making dough for dumplings. Make 9-10 balls out of the dough.
2) In the microwave bowl, add 0.5 cup water. Place the dumplings on the microwave flat glass dish and cover. Select menu, then press start.
3) When beeps, take out the dumplings.
4) Allow them to cool. In a microwave safe flat glass dish add butter and put the dumplings in it, then press start.

Co 10: Sweet and Sour Veg

- **Weight Limit**: 0.1 ~ 0.3 kg.
- **Utensil**: Microwave safe bowl

Ingredients

List		Weight-1	Weight-2	Weight-3
For Sweet and Sour Veg	Weight Limit	0.1 kg	0.2 kg	0.3 kg
	Cut vegetables (Baby corns cut lengthwise, Broccoli florets,Mushroom pieces, Pineapple slices, Capsicum)	100 g	200 g	300 g
	Chopped spring onion and garlic	0.25 cup	0.5 cup	1 cup
	Oil	0.5 tbsp	1 tbsp	1.5 tbsps
	Red chilli paste	0.25 tsp	0.25 tsp	0.5 tsp
	Tomato Ketchup	0.25 cup	0.25 cup	0.5 cup
	Vinegar	As per taste		
	Sugar	0.5 tsp	1 tsp	1 tsp
	Salt	As per taste		
	Soya sauce	1 tsp	1 tsp	1 tsp
	Pineapple juice	0.25 cup	0.25 cup	0.5 cup
	Water	1 cup	1 cup	1 cup
	Cornflour	2 tbsps mixed with 0.5 cup water		

Instructions

1) In a microwave safe bowl add oil, chopped spring onions and garlic, red chilli paste. Select menu and weight, then press start.

2) When beeps, mix well and cut vegetables, tomato ketchup, vinegar, salt,sugar, soya sauce, pineapple juice, water and cornflour. Mix well, then press start. Stand for 5 minutes.

Co 11: Risotto Rice

- **Weight Limit**: 0.1 ~ 0.4 kg.
- **Utensil**: Microwave safe bowl

Ingredients

Limit		Weight-1	Weight-2	Weight-3	Weight-4
For Risotto Rice	Weight Limit	0.1 kg	0.2 kg	0.3 kg	0.4 kg
	Arborio rice (soaked)	100 g	200 g	300 g	400 g
	Water	200 ml	400 ml	600 ml	650 ml
	Chopped carrots	0.25 cup	0.5 cup	1 cup	1.5 cups
	Chopped garlic	1 tsp	1.5 tsps	2 tsps	2.5 tsps
	Peas	0.25 cup	0.5 cup	1 cup	1.5 cups
	Sliced mushroom	0.25 cup	0.5 cup	1 cup	1.5 cups
	Chopped coriander leaves/ parseley	As required			
	Spinach (blended and pureed)	0.25 cup	0.5 cup	1 cup	1 cup
	Tomato puree	0.3 cup	0.5 cup	1 cup	1 cup
	Fresh cream	3 tbsps	4 tbsps	5 tbsps	6 tbsps
	Olive oil	1 tbsp	2 tbsps	3 tbsps	4 tbsps
	Grated cheese	As required			
	Salt	As per taste			

Instructions

1) In a microwave safe bowl add olive oil, garlic, mushrooms, peas, carrots and tomato puree. Mix well. Select category and weight, then press start.
2) When beeps, mix well and add rice. Mix well, then press start.
3) When beeps, mix well and add water and salt. then press start.
4) Mix well and stand for 5 minutes.
5) Add spinach, tomato puree, cream, grated cheese and chopped coriander/parseley and serve.

Co 12: Spaghetti With Tomato Sauce

- **Weight Limit**: 0.1 ~ 0.3Kg
- **Utensil**: Microwave safe bowl

Ingredients

List		Weight-1	Weight-2	Weight-3
For Spaghetti with tomato sauce	Weight Limit	0.1 kg	0.2 kg	0.3 kg
	Spaghetti noodles	100 g	200 g	300 g
	Water	400 ml	800 ml	1200 ml
	Olive oil	1 tbsp	1.5 tbsps	2 tbsps
	Chopped garlic	1 tbsp	1.5 tbsps	2 tbsps
	Chopped tomatoes	1 cup	1.5 cup	2 cups
	Chopped mushrooms	0.25 cup	0.5 cup	1 cup
	Chopped onion	0.5 cup	1 cup	1.5 cups
	Sliced olives (pitted)	5 nos.	6 nos.	7 nos.
	Fresh basil	As required		
	Parmesan cheese	As required		
	Salt, pepper, oregano and chilli flakes	As per taste		

Instructions

1) In a microwave glass bowl add spaghetti noodles, water and few drops of oil. Select category and weight and then press start.
2) When beeps, remove and drain the water. Wash the noodles under running water to separate.
3) In another microwave glass bowl add olive oil, garlic, olives, onions, mushrooms, chopped tomatoes, salt, pepper, oregano and chilli flakes. Press start.
4) When beeps, mix well and add the spaghetti. Mix well and press start. Rip all the basil over it and spread grated parmesan cheese and serve.

Co 13: Cottage Cheese Tortellini

- **Weight Limit**: 8 Pc
- **Utensil**: Microwave safe bowl

Ingredients

List		Weight
For Dough	Weight Limit	8 Pc
	Maida	1 cup
	Egg	1 no.
	Olive oil	1 tbsp
	Salt	As per taste
	Water (to knead the dough)	As required
For Stuffing	Blanched spinach	0.5 cup
	Paneer (roughly mashed)	100 g
	Olive oil	1 tbsp
	Garlic (minced)	1 tbsp
	Salt and pepper	As per taste
For Sauce	Blanced tomatoes (skin removed)	5 nos.
	Garlic pods	8-10 nos.
	Coriander leaves (fresh)	1 tbsp
	Olive oil	1 tbsp
	Chilli flakes	1 tsp
	Oregano	0.5 tsp
	Salt, pepper	As per taste

Instructions
Pre-Preparation for Stuffing :

1) In a microwave safe glass bowl take olive oil and minced garlic, mix and microwave 100% for 2 minutes. Add mashed paneer and blanched and chopped spinach, salt and pepper. Mix well and microwave 100 % for 2 minutes.
2) In another bowl take maida, salt, beaten egg and olive oil. Mix well and knead a firm dough adding enough water. Cover and keep aside for 10-15 minutes.
3) Divide the dough into 5-6 equal sized balls and roll out each ball into a long and rectangular strip (approx. 0.65 mm broad) and cut into squares.
4) Fill each square shape with spinach and cottage cheese stuffing (1 tsp). Wet the edges with little water and cover with another square and seal it by pressing tightly. There should be no air-bubble left within. Make all tortellinis following same procedure.
5) Take 500 ml water in a microwave safe bowl and keep inside the microwave. Select category, then press start.

6) When beeps, put the tortellinis in the boiling water. Cover, then press start
7) When beeps, remove and strain the tortellinis and place in a serving dish and keep aside covered
8) Blend together blanched tomatoes, garlic pods, coriander leaves with a blender. Take this puree in a microwave safe bowl, add olive oil, salt, pepper oregano and chilli flakes. Mix well, then press start.
9) When cooking ends, pour this sauce over the cooked tortellini and serve hot

Co 14: Mexican Corn Rice

- **Weight Limit**: 0.1 ~ 0.4 kg
- **Utensil**: Microwave safe glass bowl, Microwave safe flat glass dish, Low rack

Ingredients

List		Weight-1	Weight-2	Weight-3	Weight-4
For Mexican Corn Rice	Weight Limit	0.1 kg	0.2 kg	0.3 Kg	0.4 Kg
	Rice	100 g	200 g	300 g	400 g
	Cloves	2 nos.	3 nos.	4 nos.	5 nos.
	Oil	0.5 tbsp	1tbsp	1.5 tbsps	2 tbsps
	Water	200 ml	400 ml	600 ml	650 ml
	Butter	0.5 tbsp	1tbsp	1.5 tbsps	2 tbsps
	Sweet corns	0.25 cup	0.5 cup	1 cup	1.5 cups
	Hot sauce	0.25 cup	0.5 cup	1 cup	1.5 cups
	Cheese cubes	1 no.	2 nos.	3 nos.	4 nos.
	Salt (if required)	As per taste			
	Red chilli powder (if required)	As per taste			
	Tomato (chopped)	2 nos.	3 nos.	4 nos.	5 nos.

Instructions

1) In a microwave glass bowl add rice, cloves, water. Select category and weight and then press start.
2) When beeps, remove the bowl and keep aside after mixing.
3) In another microwave glass bowl add butter and sweet corns, then press start.
4) When beeps, add hot sauce, cooked rice, cheese cubes, salt and red chilli power (if required). Mix well. Now take a microwave safe flat glass dish and spread chopped tomatoes at the bottom, now layer with cooked rice and press it down properly. Cover with aluminium foil. Keep the microwave safe flat glass dish on low rack, then press start.

NOTE

- For Hot Sauce - In a microwave glass bowl take 8 blanded and pureed tomatoes, 4 tbsps butter,1 cup chopped onions, salt, red chilli powder, oregano, sugar, chilli sauce (as per taste), 1 tbsp garlic paste, 2 tbsps tomato sauce, a pinch ajwain. Mix well and microwave at 100% for 5 minutes.

Co 15: Broccoli in Butter Sauce

- **Weight Limit**: 0.1 ~ 0.3 kg
- **Utensil**: Microwave safe bowl, Microwave safe glass dish

Ingredients

List		Weight-1	Weight-2	Weight-3
For Broccoli in Butter Sauce	Weight Limit	0.1 kg	0.2 kg	0.3 kg
	Broccoli	100 g	200 g	300 g
	Milk	0.5 cup	1 cup	1.5 cups
	Fresh cream	0.25 cup	0.5 cup	0.75 cup
	Onion (chopped)	1 no.	2 nos.	3 nos.
	Garlic (chopped)	0.5 tsp	1 tsp	1 tsp
	Mustard powder	0.5 tsp	1 tsp	1 tsp
	Butter (melted)	1 tbsp	1.5 tbsps	2 tbsps
	Salt and pepper powder	As per taste		
	Coriander leaves (chopped)	1 tbsp	2 tbsps	3 tbsps

Instructions

1) In a microwave safe bowl take broccoli florets. Sprinkle some water and cover. Select category and weight and then press start.
2) When beeps, remove broccoli and keep aside. In a microwave safe flat glass dish take butter, chopper garlic, chopped onions. Mix well, then press start.
3) When beeps, stir and add milk, fresh cream, mustard powder, coriander, salt and pepper powder and broccoli. Mix, then press start.

Co 16: Shrimps in Garlic Butter

- **Weight Limit**: 0.4 kg
- **Utensil**: Microwave safe bowl

Ingredients

List		Weight
For Shrimps in Garlic Butter	Weight Limit	0.4 kg
	Shrimps (Small)	400 g
	Butter	4 tbsps
	Parsley (chopped)	A few sprigs
	Garlic paste	3 tbsps
	Mustard paste	1 tbsp
	Lemon juice	1 tbsp
	Pepper corns (Roughly crushed)	8-10 nos.
	Salt	To taste

Instructions

1) Remove heads and shells of shrimps and clean and drain thoroughly.
2) In a microwave bowl place shrimps, garlic paste, mustard paste, butter. parsley, lemon juice, pepper coms (Crush) and salt mix well Select Category and then press start.
3) When beeps. Remove and serve hot.

Co 17: Chilli Chicken

- **Weight Limit**: 0.1 ~ 0.4 kg
- **Utensil**: Microwave safe bowl

Ingredients

List		Weight-1	Weight-2	Weight-3	Weight- 4
For Chilli Chicken	Weight Limit	0.1 kg	0.2 kg	0.3 kg	0.4 kg
	Boneless chicken	100 g	200 g	300 g	400 g
	Oil	1 tbsp	1.5 tbsps	2 tbsps	2.5 tbsps
	Chopped ginger garlic	0.5 tbsp	1 tbsp	1.5 tbsps	2 tbsps
	Chopped onions	0.5 no.	1 no.	1 no.	2 no.
	Chopped green chillies	0.5 tbsp	1 tbsp	2 tbsps	2.5 tbsps
	Capsicum	0.5 No.	1 no.	2 nos.	2 nos.
	Soya sauce	0.5 tbsp	0.5 tbsp	1 tbsp	1.5 tbsps
	Chilli sauce	0.5 tbsp	0.5 tbsp	1 tbsp	1.5 tbsps
	Vinegar	0.5 tbsp	0.5 tbsp	1 tbsp	1.5 tbsps
	Salt, sugar and pepper	As per taste			
	Cornflour (mixed with 0.5 cup water)	1 tbsp	1 tbsp	1 tbsp	1.5 tbsps

Instructions

1) In a microwave safe bowl add oil, chopped ginger, garlic, boneless chicken, soya sauce, chilli sauce and cover. Select category and weight and then press start.

2) When beeps add, chopped onions, capsicum, chopped green chillies, vinegar, salt, sugar, pepper, cornflour mixed with water. Cover, then press start. Stand for 5 minutes. Serve

Co 18: Hakka Noodles

- **Weight Limit**: 0.1 ~ 0.3 kg
- **Utensil**: Microwave safe bowl

Ingredients

List		Weight-1	Weight-2	Weight-3
For Hakka Noodles	Weight Limit	0.1 kg	0.2 kg	0.3 kg
	Hakka noodles	100 g	200 g	300 g
	Water	400 ml	800 ml	1200 ml
	Oil	1 tbsp	1.5 tbsps	2 tbsps
	Chopped veg - carrot, peas, french beans, capsicum	1 cup	1.5 cups	2 cups
	Salt, red chilli powder, green chilli sauce	As per taste		

Instructions

1) In a microwave safe bowl add hakka noodles, water and few drops of oil. Select category and weight, then press start.
2) When beeps, remove drain water and wash and separate the noodles under running water.
3) In another microwave safe bowl add oil, mix vegetables, salt, red chilli powder, green chilli sauce. Mix well, then press start.
4) When beeps, add noodles to the bowl. Mix, then press start.

Co 19: Veg in hot garlic sauce

- **Weight Limit**: 0.1 ~ 0.3 kg
- **Utensil**: Microwave safe bowl

Ingredients

List		Weight-1	Weight-2	Weight-3
For Veg in hot garlic sauce	Weight Limit	0.1 kg	0.2 kg	0.3 kg
	Mix veg - Cauliflower florets, capsicum, baby corns, beans	100 g	200 g	300 g
	Oil	1 tbsp	1.5 tbsps	1.5 tbsps
	Chopped garlic, ginger, green chillies	1 tbsp	2 tbsps	2 tbsps
	Corn flour	1 tbsp	1.5 tbsps	2 tbsps
	Pepper, salt, sugar	As per taste		
	Oregano (optional)	As per taste		
	Water	2 cups	3 cups	3 cups

Instructions

1) Cut the capsicum and cauliflower into medium sized pieces,baby corns and french beans into small sized pieces.
2) In a microwave safe bowl add oil, chopped onion, ginger, green chillies. Select category and weight and then press start.
3) When beeps, mix and add vegetables, pepper, salt, sugar,cornflour mixed with water. then press start. Stand for 5 minutes.Serve.

Co20: Schezwan Chicken

- **Weight Limit**: 0.1 ~ 0.5 kg
- **Utensil**: Microwave safe bowl

Ingredients

List		Weight
For Schezwan Chicken	Weight Limit	0.5 kg
	Boneless chicken	500 g
	Dry red chillies	8 nos.
	Garlic paste	4 tsps
	Tomato ketchup	5 tbsps
	Vinegar	2 tsps
	Red chilli sauce	2 tbsps
	Sugar and salt	As per taste
	Spring onions (with greens)	1 cup
	Comllour (mixed with 0.25 cup water)	2 tsps
	Oil	3 tbsps

Instructions

1) In a microwave safe bowl mix together oil, garlic paste, dry red chillies, chicken pieces, tomato ketchup, vinegar, red chilli paste, sugar. Mixwell. Select category and then press start.
2) When beeps, mix well and add spring onions, cornflour, salt. Mix well and then press start.

Co2 1: Veg Manchurian

- **Weight Limit**: 0.6 kg
- **Utensil**: Microwave safe flat glass dish, Microwave safe bowl

Ingredients

List		Weight
For Manchurian Balls	Weight Limit	0.6 Kg
	Grated Cabbage	1 cup
	Grated carrots	0.75 cup
	Grated cauliflower	0.5 cup
	Cornflour	3 tbsps
	Maida	1 tbsp
	Salt and pepper	As per taste

List		Weight
For Manchurian Sauce	Chopped ginger	1 tsp
	Chopped green chilli	1 no.
	Chopped Onion	0.5 no.
	Soya sauce	1 tbsp
	Tomato sauce	2 tbsps
	Vinegar	2 tsps
	Pepper, Salt, Cornflour	As per taste
	Oil	1 tbsp

Instructions

1) Mix all the ingredients of Manchurian balls in a bowl. Make balls of medium size from the mixture.
2) In a microwave safe flat glass dish keep the manchurian balls
3) When beeps, remove and allow to cool.
4) In a microwave bowl oil, ginger, green chilli, onion, soya sauce,tomato sauce, vinegar, pepper, salt, mix well and then press start.
5) When beeps mix well add cornflour mixed with 1.5 cups water. Press start. Add Manchurian ball. Stand for 3 minutes and serve hot with steamed rice or fried rice.

C022:Chilli soy Nuggets

- **Weight Limit** : 0.4 kg
- **Utensil**: Multicook tawa, High rack, Microwave safe glass bowl

Ingredients

List		Weight
For nuggets	Weight Limit	0.4 kg
	Soyabean nuggets (Soaked in hot water for 1 hour and squeezed)	150 g
	Oil	2.5 tbsps
	Capsicum(cut in long strips)	0.25 cup
	Spring onions	0.25 cup
	Blanched tomatoes	3 nos.
	Garlic pods	7-8 nos.
	Soya sauce	2 tsps
	Vinegar	1 tsp
	Cournflour (mixed with 0.5 water)	1.5 tsps
	Chilli sauce	1 tbsp
	Salt, Red chilli powder, black pepper powder	As per taste

Instructions

1) Pre -preparation of Sauce- Puree tomatoes and garlic pods in a blender. In a Microwave safe glass bowl take 2 tbsps. oil and all the vegetables. Mix well and microwave 100% for 2 minutes. Add tomato puree, soya sauce, chilli sauce, vinegar , cournflour mixed with 0.5 cup water) and all the spices. Mix well and Microwave 100% for 3 minutes. Sauce is ready.
2) Take soaked and squeezed soyabean nuggets in a bowl and pour 0.5 tbsp oil and mix well. Put all soya nuggets on tawa. Keep tawa and high rack inside microwave. Select category and press start.
3) When beeps, turnover the soya nuggets and again press start.
4) When beeps, transfer roasted soya nuggets in the sauce and stir well. Press Start. Serve them hot with steamed rice.

[o23]: Steamed Egg with Tofu

- **Weight Limit**: 0.1 ~ 0.3 kg
- **Utensil**: Microwave safe flat glass dish

Ingredients

List		Weight-1	Weight-2	Weight-3
For Steamed Egg with Tofu	Weight Limit	0.1 kg	0.2 kg	0.3 kg
	Tofu (cut into chunks)	50 g	100 g	150 g
	Egg	1 no.	2 nos.	3 nos.
	Sesame oil	0.5 tsp	1 tsp	1 tsp
	Light soya sauce	0.5 tsp	1 tsp	1 tsp
	Red chilli (chopped)	1 no.	1 no.	1 no.
	Spring onion (chopped)	1 tbsp	2 tbsps	3 tbsps
	Boiled egg yolk (cut into pieces)	1 no.	2 nos.	2 nos.
	Salt and pepper	A pinch		

Instructions

1) In a bowl take sesame oil, soya sauce, black pepper powder, salt and egg. Beat well with blender. Mix tofu chunks into it and mix.
2) Put this mixture in a Microwave safe flat glass dish. Sprinkle chopped spring onions and chopped red chilli on top. Now put boiled egg yolk (cut in pieces) on top. Cover the flat dish with plastic film.
3) Keep the microwave safe flat glass dish in the microwave. Select category and weight, then press start.
4) Give standing time of 5 minutes and serve hot.

C024: Almond and Vegetables Stir Fry

- **Weight Limit**: 0.1 ~ 0.3 kg
- **Utensil**: Microwave safe bowl

Ingredients

List		Weight-1	Weight-2	Weight-3
For Almond and Vegetables Stir Fry	Weight Limit	0.1 kg	0.2 kg	0.3 kg
	Broccoli (cut into florets)	50 g	100 g	150 g
	Red capsicum (cut into big square pieces)	0.25 cup	0.5 cup	0.75 cup
	Garlic (chopped)	0.5 tsp	1 tsp	1 tsp
	Ginger (chopped)	0.5 tsp	1 tsp	1 tsp
	Onions (sliced)	1 no.	1.5 nos.	2 nos.
	Slivered almonds	2 tbsps	3 tbsps	4 tbsps
	Canola oil	1 tbsp	1.5 tbsps	2 tbsps
For Sauce	Soya sauce	1 tsp	1.5 tsps	2 tsps
	Water	3 tbsps	6 tbsps	9 tbsp
	Sesame oil	0.5 tsp	1 tsp	1.5 tsps
	Sugar	1 tsp	2 tsps	3 tsps
	Cornflour	0.5 tsp	1 tsp	1.5 tsps
	Salt and black pepper powder	As per taste		

Instructions

1) In a microwave safe glass bowl take canola oil, chopped ginger- garlic, sliced onions. Select category and weight, then press start.
2) In a small bowl, take sugar, cornflour. Add water, soya sauce, sesame oil and mix well. Make a smooth paste.
3) When beeps, add broccoli, red capsicum, slivered almonds. Mix well and then press start.
4) When beeps, add the sauce and stir well. then press start. Serve stir fried vegetables hot.

Pasteurized Milk

P5 1: Pasteurize Milk

- **Weight Limit**: 1-2 L
- **Utensil**: Milk pasteurization kit

Ingredients

List		Weight		
For Pasteurize Milk	Weight Limit	1.0 L	1.5 L	2.0 L
	Milk (Cow, Buffalo, Packet etc)	1.0 L	1.5 L	2.0 L

Instructions

1) Pour milk to the scale shown in the Milk Pasteurization kit. (Fig.1)
2) Cover with lid and close as per the directions on the kit. (Fig.2)
3) Place the kit in microwave oven.
4) Select the category, weight and temperature. (refrigerated - select 4 ℃, room temp - select 25 ℃)
5) Press start. When pasteurization is over, use the milk for drinking, making tea or coffee etc. For opening the lid refer (Fig.3)

Tips

1) Milk Pasteurization kit is only for milk. Do not use for other purpose.
2) Use fresh loose or packet milk. Do not repeat pasteurization.
3) For storage, let the milk stand to cool down after pasteurization, and then keep it in a refrigerator with covered. Do not move to another container.
4) The pasteurized milk can be consumed up to 2-3 days.

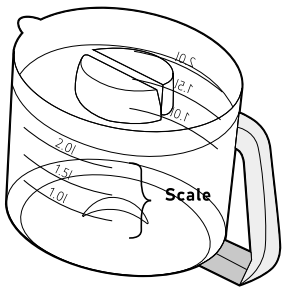

Fig. 1

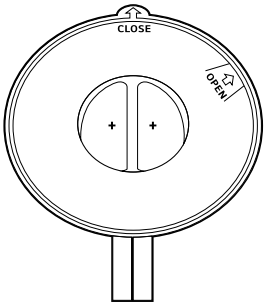

Fig. 2

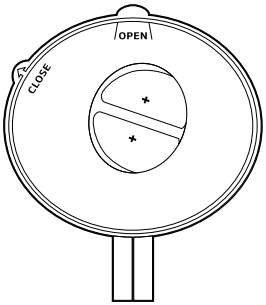

Fig. 3

Tea

dd I: Tea

- **Weight Limit**: 1-4 cups
- **Utensil**: Microwave safe glass bowl

Ingredients

List		Weight-1	Weight-2	Weight-3	Weight-4
For Tea	Weight Limit	1 cup	2 cups	3 cups	4 cups
	Water	120 ml	240 ml	360 ml	480 ml
	Tea leaves	1 tsp	2 tsps	3 tsps	4 tsps
	Milk	120 ml	150 ml	225 ml	300 ml
	Sugar	As per taste			

Instructions

1) In a Microwave safe glass bowl add water, tea leaves. Select category and weight. Press start.
2) When beeps, add milk and sugar. Press start. Serve hot.
   1 cup tea = 150 ml approx

dd2: Coffee

- **Weight Limit**: 1-4 cups
- **Utensil**: Microwave safe glass bowl

Ingredients

List		Weight-1	Weight-2	Weight-3	Weight-4
For Coffee	Weight Limit	1 cup	2 cups	3 cups	4 cups
	Water	60 ml	120 ml	180 ml	240 ml
	Coffee	0.5 tsp (each cup)			
	Milk	120 ml	150 ml	225 ml	300 ml
	Sugar	As per taste			
	Ginger/ cardamon (crushed)	As per taste (optional)			

Instructions

1) In a Microwave safe glass bowl add water. Select category and weight, then press start.
2) Meanwhile in each cup add 0.5 tsp coffee (with few water drops) and sugar. Beat well.
3) When beeps, add milk to boiling water. Press start.
4) Add milk to each cup and serve hot.
   1 cup coffee = 150 ml approx

dd3: Masala Tea

- **Weight Limit**: 1-4 cups

- **Utensil**: Microwave safe glass bowl

Ingredients

List		Weight-1	Weight-2	Weight-3	Weight-4
For Masala Tea	Weight Limit	1 cup	2 cups	3 cups	4 cups
	Water	120 ml	240 ml	360 ml	480 ml
	Tea leaves	1 tsp	2 tsps	3 tsps	4 tsps
	Milk	120 ml	150 ml	225 ml	300 ml
	Sugar	As per taste			
	Chai masala	As per taste			

Instructions

1) In a Microwave safe glass bowl add water, tea leaves and chai masala. Select category and weight. Press start.
2) When beeps, add milk and sugar. Press start
3) When beeps, keep it again in microwave and press start for dragging tea.
4) Serve hot.

   1 cup tea = 150 ml approx

dd4: Ginger Tea

- **Weight Limit**: 1-4 cups
- **Utensil**: Microwave safe glass bowl

Ingredients

List		Weight-1	Weight-2	Weight-3	Weight-4
For Ginger Tea	Weight Limit	1 cup	2 cups	3 cups	4 cups
	Water	120 ml	240 ml	360 ml	480 ml
	Tea leaves	1 tsp	2 tsps	3 tsps	4 tsps
	Milk	120 ml	150 ml	225 ml	300 ml
	Sugar	As per taste			
	Ginger	As per taste			

Instructions

1) In a Microwave safe glass bowl add water, tea leaves and crushed ginger. Select category and weight. Press start.
2) When beeps, add milk and sugar. Press start
3) When beeps, keep it again in microwave and press start for dragging tea.

4) Serve hot.

1 cup tea = 150 ml approx

dd5: Tulsi Tea

- **Weight Limit**: 1-4 cups
- **Utensil**: Microwave safe glass bowl

Ingredients

List		Weight-1	Weight-2	Weight-3	Weight-4
For Tulsi Tea	Weight Limit	1 cup	2 cups	3 cups	4 cups
	Water	120 ml	240 ml	360 ml	480 ml
	Tea leaves	1 tsp	2 tsps	3 tsps	4 tsps
	Milk	120 ml	150 ml	225 ml	300 ml
	Sugar	As per taste			
	Tulsi Leaves	As per taste			

Instructions

1) In a Microwave safe glass bowl add water, tea leaves and tulsi leaves. Select category and weight. Press start.
2) When beeps, add milk and sugar. Press start
3) When beeps, keep it again in microwave and press start for dragging tea.
4) Serve hot.

1 cup tea = 150 ml approx

Dairy Delight

PA I: Paneer

- **Weight Limit**: 0.5 kg
- **Utensil**: Microwave safe glass bowl

Ingredients

List		Weight
For Paneer	Weight Limit	0.5 kg
	Milk	500 ml
	Lemon juice/Vinegar	4 tbsps

Instructions

1) In a Microwave safe glass bowl add milk and lemon juice/vinegar. Select menu and press start.

2) When it gives beeps, stir it and again press start.
3) When beeps, remove the bowl, then strain in a muslin cloth and press it.

CU 1: Curd

- **Weight Limit**: 0.5 kg
- **Utensil**: Microwave safe glass bowl

Ingredients

List		Weight
For Curd	Weight Limit	0.5 kg
	Milk	500 ml
	Starter curd	2 tbsps

Instructions

1) In a Microwave safe glass bowl add milk and select menu and press start.
2) When beeps add starter culture of curd for inoculation and stir it. Again press start.
3) Now take out the bowl and keep it in a casserole and store in warm place for proceeding appropriate setting temperature and time for 5-6 hours

CU2: Flavoured Yoghurt

- **Weight Limit**: 0.6 kg
- **Utensil**: Microwave safe glass bow, Low rack

Ingredients

List		Weight
For Flavoured Yoghurt	Weight Limit	0.6 kg
	Curd	200 ml
	Condensed Milk (Milkmaid)	100 ml
	Fresh cream	200 ml
	Flavours (Vanilla, Strawberry, Pineapple essence)	500 ml

Instructions

1) In a Microwave safe glass bowl mix all the ingredients. Beat well till smooth.
2) Select menu and press start. (Pre-heat process)
3) When beeps, keep the Microwave safe glass bowl on low rack and keep it in microwave. Press start.
4) When cooking ends, take out and allow to come to room temperature. Keep in freezer 1 hour.

NOTE

- In case you use strawberry essence, add a pinch of pink food color to add color to the yoghurt. For pineapple youghurt, add pineapple slices during the time serving.
- Do not put anything in the oven during Pre-heat mode.

Child's Favourite

CF 1: Omelette

- **Weight Limit**: 0.2 ~ 0.4 kg
- **Utensil**: Microwave safe flat glass dish

Ingredients

List		Weight-1	Weight-2	Weight-3
For Omelette	Weight Limit	0.2 kg	0.3 kg	0.4 kg
	Eggs	2 nos.	3 nos.	4 nos.
	Oil	0.5 tbsp	1 tbsp	1 tbsp
	Chopped onion, tomato, coriander leaves	0.5 cup	1 cup	1 cup
	Salt, pepper	As per taste		

Instructions

1) Beat the eggs well and add salt, pepper and coriander leaves.
2) Add oil, tomato and onion to Microwave safe flat glass dish. Select category and weight, then press start.
3) When beeps, add the egg mixture. Cover, then press start. Allow to stand for 3 minutes.

CF2: Corn Chaat

- **Weight Limit**: 0.1 ~ 0.3 kg
- **Utensil**: Microwave safe bowl

Ingredients

List		Weight-1	Weight-2	Weight-3
For Corn Chaat	Weight Limit	0.1 kg	0.2 kg	0.3 kg
	Sweet corn	100 g	200 g	300 g
	Mix fruits (Pomegranate, cucumber, apple)	0.5 cup	1 cup	1.5 cups
	Salt, red chilli powder, chaat masala, lemon juice	As per taste		

Instructions

1) In a Microwave safe bowl add some water and sweet corns. Select category and weight, then press start.
2) Transfer the corns in a bowl add mix fruits, salt, red chilli powder, chaat masala, lemon juice. Mix well and serve.

CF3: Vermicelli Khichdi

- **Weight Limit**: 0.1 ~ 0.3 kg
- **Utensil**: Microwave safe bowl

Ingredients

List		Weight-1	Weight-2	Weight-3
For Vermicelli Khichdi	Weight Limit	0.1 kg	0.2 kg	0.3 kg
	Roasted vermicelli	100 g	200 g	300 g
	Oil	1 tbsp	1.5 tbsps	2 tbsps
	Rai, urad dal, curry leaves	As per taste		
	Chopped onion	0.5 cup	1 cup	1 cup
	Chopped tomato	1 no.	2 nos.	3 nos.
	Salt, red chilli powder, haldi, garam masala	As per taste		
	Water	400 ml	800 ml	1200 ml
	Lemon juice	As per taste		

Instructions

1) In a Microwave safe bowl add oil, rai, chana dal, curry leaves, chopped onion. Mix. Select category and weight, then press start.
2) When beeps, mix and add tomato. Press start.
3) When beeps, mix and add vermicelli, water, salt, red chilli powder, haldi, garam masala. Press start. Stand for 3 minutes.
4) Squeeze lemon, mix and serve.

CF4: Pizza

- **Weight Limit**: 0.3 kg
- **Utensil**: Low rack, High rack

Ingredients

List		Weight
For Pizza	Weight Limit	0.3 kg
	Pizza base	1 big pizza base
	Topping	3 tbsps
	Mix Vegetables - Tomato, Capsicum, Onion	1 cup
	Grated Cheese	0.5 cup
	Oregano and Chilli flakes (Optional)	As per your taste

Instructions

1) Select category, then press start. (Pre-heat process)
2) Spread pizza topping on pizza base, spread chopped vegetables on it. Sprinkle grated cheese.
3) When beeps, place the pizza on low rack, then press start.
4) When beeps, do not open the door ,continue cooking.

CF5: Garlic Bread

- **Weight Limit**: 0.3 kg
- **Utensil**: Low rack

Ingredients

List		Weight
For Garlic Bread	Weight Limit	0.3 kg
	Bread slices (French Bread)	3 slices
	Butter	5 tbsps
	Garlic paste	2 tbsps
	Grated cheese	4 tbsps
	Salt, kali mirchi powder, Oregano, chilli flakes	As per your taste

Instructions

1) Mix butter, garlic paste, grated cheese, salt, kali mirchi powder and oregano together. Apply this mixture to both sides of bread slices.
2) Select category, then press start. (Pre-heat process)
3) When beeps, keep the bread slices on low rack, then press start.
   Note : Use French bread to make garlic bread.

CFG: Choco Bars

- **Weight Limit**: 0.2 kg
- **Utensil**: Microwave safe glass bowl, Microwave safe flat glass dish

Ingredients

List		Weight
For Choco Bars	Weight Limit	0.2 kg
	Chocolate chips	0.5 cup
	Oats (crushed)	1 cup
	Honey	3 tbsps
	Brown sugar	4 tbsps
	Butter (softened)	8 tbsps
	Chopped nuts (almonds, pistachio, walnut)	As required

Instructions

1) In a microwave safe glass bowl put oats, half amount of butter (4 tbsps), honey and brown sugar. mix well. Select category, then press start.
2) Grease a microwave flat glass dish with butter and line the dish with butter paper. Again grease it with butter.

3) When beeps, remove and pour the oats mixture into greased flat glass dish, then press firmly with spoon.
4) In Microwave safe glass bowl add rest of the butter, chocolate chips. Mix, then press start.
5) When beeps, pour this mixture on oats and sprinkle chopped nuts.
6) Cut into rectangle bars when set and serve chilled.

[F]: Apple Pie

- **Weight Limit**: 0.6 kg
- **Utensil**: Metal cake tin, Low rack

Ingredients

List		Weight
For Apple Filling	Weight limit	0.6 kg
	Apple (pealed, cleaned, sliced thinly)	4 large sized
	White sugar	0.25 cup
	Brown sugar	0.25 cup
	Lemon juice	1 tsp
	Cinnamon powder	1 tsp
	Nutmeg powder	0.25 cup
	Salt	0.25 cup
	Softened butter	2 tbsps
	Cornflour	2 tbsps
For Short Crust Pastry	Maida	2.5 cups (300 g)
	Salt	0.5 tsp
	Sugar (Granulated)	2 tbsps
	Unsalted butter (chilled and cut into 2 cm pieces)	1 cup
	Ice water	0.25 - 0.5 cup (60-120 ml)

Instructions

1) Put maida, salt, sugar in a food processor/mixer. Grind it well. Take it in a bowl. Add chilled cubes of butter. Rub with hand to make bread crumbtexture or till soft and well granulated.
2) Add 0.25 cup ice water to make a soft dough when pinched. Roll out thedough into 2 equal parts. Make disc shapes. Cover with plastic wrap andkeep refrigerated at least for 30 minutes,

3) When chilled, roll out one disc into big shape and place in a greased cake tin, covering it from the edges. Again keep in refrigerator for 1 hour.
4) Take all the ingredients of apple filling in a mixer. Grind it to make a puree without any water. Pour this mixture in the cake tin.
5) Roll out the second chilled disc and cut out long strips of 1.5 cm width.Cover the pie dish with these strips, arranging crossways as shown in figure 1 and figure 2.
6) Seal the edges and wet them with water. Cover the edges with foil paper to avoid over burning.
7) Select the category, then press start. (Pre-heat process). When beeps, place the cake tin on low rack, then press start. When beeps, give a standing time of 5-10 minutes. Cool and serve in pieces.

NOTE

- If the butter becomes soft while making pie, keep the rolled dough in freezer.

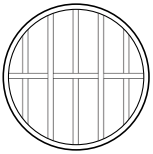

Fig -1

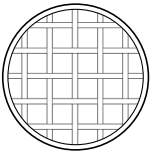

Fig -2

CF8: Bread Pudding

- **Weight Limit**: 0.1 ~ 0.3 kg
- **Utensil**: Microwave safe flat glass dish

Ingredients

List		Weight-1	Weight-2	Weight-3
For Bread Pudding	Weight Limit	0.1 kg	0.2 kg	0.3 kg
	Bread slices	2 nos.	3 nos.	4 nos.
	Milk (for dipping the bread)	0.5 cup	1 cup	1.5 cups
	Egg	1 nos.	2 nos.	2 nos.
	Vanilla Essence	0.5 tsp	0.75 tsp	1 tsp
	Sugar	3 tbsps	4 tbsps	5 tbsps
	Dry fruits	As per your taste		

Instructions

1) Make small pieces of Bread slices. Beat the egg very well . Mix all the ingredient very well.
2) Pour this mixture into Microwave safe flat glass dish. Select category and weight, then Press start.

CF9: Cheesy Nachos

- **Weight Limit**: 0.3 kg
- **Utensil**: Microwave safe flat glass dish

Ingredients

List		Weight
For Cheesy Nachos	Weight Limit	0.3 kg
	Nachos	300 g
	Grated cheese	1 cup
	Pizza sauce	6 tbsps
	Chopped onion, tomato	2 cups

Instructions

1) In a Microwave safe flat glass dish add nachos, chopped onion, tomato, pizza sauce and grated cheese. Select category, then press start.

CF 10: Chocolate Balls

- **Weight Limit**: 0.3 kg
- **Utensil**: Microwave safe glass bowl

Ingredients

List		Weight
For Chocolate Balls	Weight Limit	0.3 kg
	Condensed Milk (Milkmaid)	1 cup
	Marie biscuit powder	1 cup
	Milk powder	0.5 cup
	Malted Chocolate powder (Bournvita)	0.5 cup
	Grated coconut	0.5 cup

Instructions

1) In a Microwave safe safe glass bowl add Condensed Milk (Milkmaid), marie biscuit powder, milk powder, Malted Chocolate powder (Bournvita). Mix well. Select category, then press start.
2) Allow to cool. Make balls out of the mixture. Roll out the balls in the grated coconut.
3) Keep in refrigerator for half an hour.

CF 11: Strawberry Custard

- **Weight Limit**: 0.5 kg
- **Utensil**: Microwave safe bowl

Ingredients

List		Weight
For Strawberry Custard	Weight Limit	0.5 kg
	Milk	1 cup
	Strawberry custard powder	3 tbsps
	Sugar	50 g
	Strawberry pieces	As required

Instructions

1) In a Microwave safe bowl add milk, strawberry custard powder, sugar. Mix well.
2) Select category, then press start.
3) When beeps, stir well. Press start.
4) When beeps, stir well. Press start. Allow to set in refrigerator.

CF 12: Veg Burger

- **Weight Limit**: 0.1 ~ 0.3 kg
- **Utensil**: Multicook tawa, High rack

Ingredients

List		Weight-1	Weight-2	Weight-3
For Veg Burger	Weight Limit	0.1 kg	0.2 kg	0.3 kg
	Burger buns	1 no.	2 nos.	3 nos.

List		Weight-1	Weight-2	Weight-3
For Tikkis	Potatoes (boiled)	100 g	200 g	300 g
	Boiled peas	0.25 cup	0.5 cup	1 cup
	Chopped ginger	1 tsp	2 tsps	3 tsps
	Green chillies	1 no.	2 nos.	3 nos.
	Chopped coriander leaves	2 tbsp	3 tbsps	4 tbsps
	Salt, red chilli powder, garam masala, chaat masala	As per taste		
	Cornflour	For binding		
	Tomato slices	1 no.	2 nos.	3 nos.
	Onion slices	2 nos.	4 nos.	6 nos.
	Cheese slices	1 no.	2 nos.	3 nos.
	Butter	1 tsp	2 tsps	3 tsps
	Tomato sauce	1 tbsp	2 tbsps	3 tbsps

Instructions

1) In a bowl mix all the ingredients for tikkis and prepare round and flat tikkis out of it.
2) Slit the buns into two halves. Apply the butter inside the buns.
3) Keep the tikkis on the tawa. Keep on high rack. Select category and weight, then press start.
4) When beeps, turn over the tikkis, then press start.
5) When beeps, remove the tikkis. Now apply tomato sauce on one half of the bun. Keep the cheese slice, tikki, onion slices and then tomato and cheese slices and cover with the second half of the bun.
6) Now keep the burger on high rack, then press start.

CF 13: Mushroom and Pepper Pizza

- **Weight Limit**: 0.3 kg
- **Utensil**: Multicook tawa, Low rack

Ingredients

List		Weight
For Pizza Base	Weight limit	0.3 kg
	Dry active yeast	3 g
	Water	2 tbsps
	Sugar	0.25 tsp
	Maida	60 g
	Salt	0.25 tsp
	Oil	1 tsp
For Topping	Pizza sauce	2 tbsps
	Vegetables (Sliced mushroom, chopped yellow and red bell pepper	1 cup
	Grated cheese	1 cup
	Oregano and chilli flakes	As per taste

Instructions

1) Dissolve the yeast in lukewarm water, stir in sugar and keep for 10 minutes till frothy.
2) Sieve the flour, add the yeast mixture, oil and salt. Prepare a dough usinga little water if required. Knead till it does not stick to the pan/bowl.
3) Cover the dough with a muslin cloth and keep it till it doubles the volume.
4) Knead lightly and roll out thin chapati.
5) Keep on greased tawa. Spread the sauce, sprinkle oregano and chilliflakes, add vegetables and spread grated cheese. Keep aside.
6) Select category, then press start. (Pre-heat process).
7) When beeps, keep the tawa on low rack. Keep it inside the microwave oven. Press start.

CF 14: Noodle Rosti

- **Weight Limit**: 0.2 kg
- **Utensil**: Microwave safe glass bowl, Multicook tawa, High rack

Ingredients

List		Weight
For Noodle Rosti	Weight Limit	0.2 kg
	Boiled whole wheat noodles	0.75 cup
	Grated paneer	0.25 cup
	Grated mozarella cheese	0.25 cup
	Oil	2 tsps
	Salt and pepper	As per taste
	Coriander (chopped)	2 tbsps
For Topping	Mixed shredded vegetables (carrot, cabbage, capsicum)	0.5 cup
	Boiled bean sprouts	0.25 cup
	Oil	1 tbsp
	Salt and pepper	As per taste
	Tomato ketchup	4 tbsps

Instructions

1) In a bowl take all the ingredients for rosti and mix well with hands. Divide the dough into 4 equal parts.
2) In a Microwave safe glass bowl take oil, shredded vegetables, boiled bean sprouts, salt and pepper. Mix well. Select category, then press start.
3) When beeps, remove the bowl and mix well and divide the topping into 4 equal parts and keep aside for late use.
4) Take the dough and shape each portion into round flat circles (approx. 2 cm). Keep on tawa, keep tawa on high rack, then press start.
5) When beeps, turn over the rostis and again press start.
6) Place the rostis on a serving plate and top them with a portion of prepared topping and tomato ketchup. Serve immediately.

CF 15: Bread Rolls

- **Weight Limit**: 10 Pc
- **Utensil**: Multicook tawa, High rack

Ingredients

List		Weight
For Bread Rolls	Weight Limit	10 Pc
	Bread slices	10 slices

List		Weight
For Filling	Boiled potatoes	200 g
	Chopped green chillies	2 nos.
	Chat masala, Garam masala, Salt, Red chilli powder, Pepper	As per taste
	Oil	For brushing

Instructions

1) Dissolve the yeast in lukewarm water, stir in sugar and keep for 10 minutes till frothy.
2) Mix all the ingredients for filling in a bowl.Take the bread slices and cut the edges.
3) Take bread slices one by one and soak in water. Squeeze and drain extra.
4) Fill in the prepared potato mixture and shape into cylindrical rolls.
5) Brush with some oil. Prepare all the rolls.
6) Grease the multicook tawa with some oil.
7) Keep the roll in multicooktawa and keep the tawa on high rack.
8) Select menu, then press start.
9) When beeps, turn over, then press start.
10) When beeps, again turn over, then press start. Serve with sauce or chutney of your choice.

CF 16: Apple custard

- **Weight Limit**: 0.1 ~ 0.3 kg
- **Utensil**: Microwave safe glass bowl

Ingredients

List		Weight-1	Weight-2	Weight-3
For Apple custard	Weight Limit	0.1 kg	0.2 kg	0.3 kg
	Apple	100 g	200 g	300 g
	Sugar	1 tbsp	2 tbsps	3 tbsps

Instructions

1) Make small pieces of Bread slices. Beat the egg very well . Mix all the ingredient very well.
2) Pour this mixture into Microwave safe flat glass dish. Select category and weight, then Press start.

CF 17: Dhokla

- **Weight Limit**: 0.3 kg
- **Utensil**: Microwave safe flat glass dish, Microwave safe bowl

Ingredients

List		Weight
For Dhokla	Weight Limit	0.3 kg
	Besan	100 g
	Warm water	100 ml
	Curd	4 tbsps
	Green chilli and ginger paste	2 tsps
	Salt and sugar	As per taste
	Fruit salt/ Mitha soda	0.75 tsp
	Oil, rai, curry leaves, water	For tempering
	Grated coconut	For garnishing
	Yellow color/Haldi	As required

Instructions

1) Mix besan, curd, sugar, salt, water, green chilli - ginger paste, yellow color, fruit salt together. Mix well. Keep for 5-10 minutes.
2) Pour the mixture in Microwave safe safe flat glass dish. Add 0.5 cup water to the Microwave safe bowl, keep the flat glass dish, cover. Select category and weight, then press start.
3) Add the tempering to the dhokla and cover. Stand for 5 minutes. Garnishwith grated coconut and serve.

NOTE

- For tempering in a Microwave safe glass bowl add oil, rai and curry leaves.Microwave at 100% for 2 minutes. Add some water and dissolve sugar.

CF 18: Poha

- **Weight Limit**: 0.1 ~ 0.3 kg
- **Utensil**: Microwave safe glass bowl

Ingredients

List		Weight-1	Weight-2	Weight-3
For Poha	Weight Limit	0.1 kg	0.2 kg	0.3 kg
	Poha(washed)	100 g	200 g	300 g
	Oil	1 tbsp	1.5 tbsps	2 tbsps
	Rai, jeera, hing, haldi, curry leaves	As per taste		
	Chopped onion	0.5 cup	1 cup	1 cup
	Green chillies	1 no.	2 nos.	3 nos.
	Salt, Red chilli powder, garam masala, sugar	As per taste		
	Grated coconut and hara dhania	For garnishing		

Instructions

1) In a Microwave safe glass bowl add oil, rai, jeera, curry leaves. Select category and weight, then press start.
2) When beeps , add onion, green chillies, hing, haldi. Mix and press start.
3) When beeps, add washed poha, salt, red chilli powder, garam masala and sugar. Mix and press start. Squeeze lemon juice. Garnish with garted coconut and hara dhania and serve.

CF 19: Upma

- **Weight Limit**: 0.1 ~ 0.3 kg
- **Utensil**: Microwave safe glass bowl

Ingredients

List		Weight-1	Weight-2	Weight-3
For Upma	Weight Limit	0.1 kg	0.2 kg	0.3 kg
	Suji	100 g	200 g	300 g
	Oil	1 tbsp	1.5 tbsps	2 tbsps
	Water	200 ml	400 ml	600 ml
	Rai, jeera, hing, haldi, curry leaves	As per taste		
	Chopped onion	1 no.	2 nos.	2 nos.
	Green chillies	1 no.	2 nos.	3 nos.
	Salt, sugar	As per taste		
	Lemon juice	As per taste		

Instructions

1) In a Microwave safe glass bowl add oil, rai, jeera, urad dal, green chilli, suji. Mixwell.
2) Select category and weight, then press start.
3) When beeps, add onions, stir well and press start.
4) When beeps, add water, sugar, salt, lemon juice. Mix well and press start.Stand for 5 minutes.

CF20: Besan Cheela

- **Weight Limit**: 1 Pc
- **Utensil**: Multicook Tawa, High rack

Ingredients

List		Weight
For Besan Cheela	Weight Limit	1 pc
	Besan	1 cup(120 g)
	Water	200 ml
	Chopped coriander leaves	2 tbsps
	Chopped Green chilli	2 nos.
	Salt, Red chilli powder, Garam Masala, Haldi	As per taste

Instructions

1) Mix besan, curd, sugar, salt, water, green chilli - ginger paste, yellow color, fruit salt together. Mix well. Keep for 5-10 minutes.

2) Pour the mixture in Microwave safe safe flat glass dish. Add 0.5 cup water to the Microwave safe bowl, keep the flat glass dish, cover. Select category and weight, then press start.
3) Add the tempering to the dhokla and cover. Stand for 5 minutes. Garnishwith grated coconut and serve.

NOTE

- For tempering in a Microwave safe glass bowl add oil, rai and curry leaves.Microwave at 100% for 2 minutes. Add some water and dissolve sugar.

CF21: Veg Sandwich

- **Weight Limit**: 0.1 ~ 0.3 kg
- **Utensil**: High rack

Ingredients

List		Weight-1	Weight-2	Weight-3
For veg Sandwich	Weight Limit	0.1 kg	0.2 kg	0.3 kg
	Bread Slices	100 g (2 slices)	200 g (4 slices)	300 g (6 slices)
	Butter	1 tbsp	2 tbsps	4 tbsps
	Sauce/Spread	1.5 tbsp	3 tbsps	4 tbsps
	Chopped vegetables(onion, tomato, capsicum)	2 tbsps	4 tbsps	6 tbsps
	Grated cheese	2 tbsps	4 tbsps	6 tbsps
	Salt, pepper	As per taste		

Instructions

1) On a bread slice apply butter, layer with sauce, spread chopped vegetables, sprinkle grated cheese. Cover it with the other bread slice.
2) Keep the sandwich on high rack. Select category and weight, then press start.
3) When beeps, change the side of the sandwich and again press start.

CF22: Paneer Sandwich

- **Weight Limit**: 0.1 ~ 0.3 kg
- **Utensil**: High Rack

Ingredients

List		Weight-1	Weight-2	Weight-3
For Paneer Sandwich	Weight Limit	0.1 kg	0.2 kg	0.3 kg
	Bread Slices	100 g (2 slices)	200 g (4 slices)	300 g (6 slices)
	Grated paneer	100 g	150 g	200 g
	Cheese Spread	2 tbsps	3 tbsps	4 tbsps
	Chopped vegetables(onion, tomato, capsicum)	2 tbsps	4 tbsps	6 tbsps
	Minced Ginger	As per taste		
	Salt, pepper, Mustard powder	As per taste		

Instructions

1) In a bowl mix grated paneer, chopped onion, cheese spread, mincedginger salt, pepper and mustard together
2) Spread the mixture on one bread slice and cover it with the other slice.Keep the sandwich on high rack..
3) Select category and weight, then press start.
4) When beeps, change the side and press start.

[F23]: Masala Cheese Toast

- **Weight Limit**: 0.1 ~ 0.3 kg
- **Utensil**: High rack

Ingredients

List		Weight-1	Weight-2	Weight-3
For Masala Cheese Toast	Weight Limit	0.1 kg	0.2 kg	0.3 kg
	Bread Slices	100 g (2 slices)	200 g (4 slices)	300 g (6 slices)
	Butter	For applying on bread slices		

List		Weight-1	Weight-2	Weight-3
For Filling	Chopped boiled vegetables- cabbage, cauliflower, green beens, peas, capsicum	1 cup	1.5 cups	2 cups
	Chopped onions	1 no.	2 nos.	2 nos.
	Mashed boiled potatoes	2 nos.	3 nos.	4 nos.
	Chopped green chillies, coriander leaves	As per taste		
	Salt, pepper, Mustard powder	As per taste		

Instructions

1) In a bowl add mashed boiled potatoes, boiled vegetables. Mash themwell. Add chopped onion, green chillies and chopped coriander leaves.Mix well. Now add salt, red chilli powder, garam masala. Mix well.
2) Apply butter on one side of all bread slices.
3) Put the filling and grated cheese on one slice and cover with other slice.Prepare all the toasts in same way.
4) Keep the toasts on high rack. Select category and weight, then press start.
5) When beeps, turn over the side and press start.

CF24: Khandvi

- **Weight Limit**: 0.3 kg
- **Utensil**: Microwave safe bowl

Ingredients

List		Weight
For khandvi	Weight Limit	0.3 kg
	Besan	100 g
	Water	1 cup
	Curd	1 cup
	Salt	As per taste
	Chopped coriander leaves	A few sprigs
	Rai seeds	0.5 tsp
	Grated coconut	As required
	Green chilli and ginger paste	As per taste

Instructions

1) In a Microwave safe bowl mix besan, water, curd, salt and green chilli and ginger pastetogether. Mix well. Cover.
2) Select category and press start.
3) When beeps, stir well and press start.
4) Spread the batter on a greased smooth flat kitchen slab. Allow to cool,cut into lengthwise strips.
5) Roll the strips, garnish with spluttered rai, coriander leaves and gratedcoconut and serve.

CF25: Cottage Honey Toast

- **Weight Limit**: 0.1 ~ 0.3 kg
- **Utensil**: High rack

Ingredients

List		Weight-1	Weight-2	Weight-3
For Cottage Honey Toast	Weight Limit	0.1 kg	0.2 kg	0.3 kg
	Bread Slices	100 g (2 slices)	200 g (4 slices)	300 g (6 slices)
	Grated cottage cheese	As required		
	Cinnamon powder	As Required		

Instructions

1) Spread cottage cheese and cinnamon powder on the bread slices. Keep on high rack. Select category and weight, then press start.

2) When beeps, turn over the slices and press start.
3) Drizzle honey on slices and serve.

Bakery

bA 1: Brownie

- **Weight Limit**: 0.3 kg
- **Utensil**: Low rack, Metal cake tin

Ingredients

List		Weight
For Brownie	Weight Limit	0.3 kg
	Maida	125 g
	Condensed milk	150 g
	Butter	100 g
	Almonds, Walnuts	As per taste
	Baking powder	0.25 tsp
	Chocolate Essence	1 tsp
	Coco powder	2 tbsps

Instructions

1) Sieve maida and baking powder. in a bowl add milkmaid and butter and beat well. Add maida, coco powder. essence and mix. For spoon dropping consistency add milk or water. Pour the batter in metal cake tin lined with butter paper.
2) Select menu, then press start. (Preheat process)
3) When beeps. put the tin with batter on low rack. Press start to bake.

bA2: Muffins

- **Weight Limit**: 0.3 kg
- **Utensil**: Low rack, Metal muffin tray

Ingredients

List		Weight
For Muffins	Weight Limit	0.3 kg
	Maida	200 g
	Powdered sugar	100 g
	Butter	75 g
	Almonds, Walnuts	As per taste
	Egg	1 No.
	Baking powder	0.5 tsp
	Almond essence	0.5 tsp

Instructions

1) Sieve maida. baking powder. in a bowl add powdered sugar and butter and beat well. Add maida. essence and mix. For spoon dropping consistency add milk or water. Pour in to the greased muffin tray and sprinkle chopped almonds walnuts.
2) Select menu, then press start. (Preheat process)
3) When beeps, put the tray on low rack. Press start to bake.

bA3: Swiss Rolls

- **Weight Limit**: 0.2 kg
- **Utensil**: Multicook tawa, Low rack

Ingredients

List		Weight
For Swiss Rolls	Weight Limit	0.2 kg
	Maida	80 g
	Condensed Milk (Milkmaid)	100 ml
	Butter	75 g
	Baking soda	0.25 tsp
	Vanilla essence	0.25 tsp
	Mix fruit jam	2 tbsps

Instructions

1) Sieve maida and soda. In a bowl add Condensed Milk (Milkmaid) and butter. Beat well. Add the maida mixture, vanilla essence and mix well.

2) For spoon dropping consistency add milk or water. Place the butter paper at the bottom of the tray. Pour the batter.
3) Select menu, then press start. (Pre-heat process)
4) When beeps, place the tawa on low rack and keep inside the microwave oven. Press start.

bA4: Carrot Cake

- **Weight Limit**: 0.3 kg
- **Utensil**: Metal cake tin, Low rack

Ingredients

List		Weight
For Carrot Cake	Weight Limit	0.3 kg
	Maida	110 g
	Baking powder	0.25 tsp
	Grated carrot	0.5 cup
	Curd	70 mL
	Powdered sugar	170 g
	Egg	1 no.
	Vanilla essence	0.25 tsp

Instructions

1) In a bowl beat curd and sugar well till light and fluffy. In another bowl beat eggs with vanilla essence well.
2) Sieve maida, baking powder and add grated carrot to it.
3) Now add the maida mixture to the beaten curd mixture and add beaten egg mixture as well. Combine all three mixtures and beat well.
4) Grease a metal cake tin or line with butter paper. Add the cake batter.
5) Select menu, then press start.(Preheat process)
6) When beeps, put the cake tin on low rack and keep in microwave, then press start.

bA5: Chocolate Cake

- **Weight Limit**: 0.4 kg
- **Utensil**: Metal cake tin, Low rack

Ingredients

List		Weight
For Chocolate Cake	Weight Limit	0.4 kg
	Refined Wheat flour	110 g
	Powdered Sugar	120 g
	Oil	0.25 cup
	Cocoa powder	0.25 cup
	Baking powder	1 tsp
	Vanilla essence	1 tsp
	Eggs	4 nos.

Instructions

1) Grease a metal cake tin. Dust light with flour.
2) Sift flour, baking powder and cocoa powder together.
3) Separate eggs yolk from whites.
4) Beat egg whites in clean and dry bowl till fluffy.
5) Add sugar gradually, beating till thick and retains shape.
6) Beat yolks and essence till thick and fluffy again.
7) Add oil gradually beating till thick again.
8) Fold in flour gently with wooden spoon, by sprinkling evenly in 2-3 batches.
9) Pour the cake batter in cake tin.
10) Meanwhile during batter making, select category & press start. (Preheat process).
11) When beeps, keep the cake tin on low rack. Press start.

bA6: Jeera Biscuits

- **Weight Limit**: 0.2 kg
- **Utensil**: Low rack, Multicook tawa

Ingredients

List		Weight
For Jeera Biscuits	Weight Limit	0.2 kg
	Maida	120 g
	Powdered suger	50 g
	Butter	50 g
	Jeera / Ajwain	As per taste
	Baking soda	1 pinch
	Baking powder	0.25 tsp
	Water	As required

Instructions

1) Sieve maida, baking powder and soda. In a bowl add powdered sugar and butter and beat well. Add maida, jeera powder, ajwain and make a soft dough with little water.Roll a thick roti and cut cookies with the cutter. Prick with a fork. Arrange on tawa.
2) Select menu, then press start. (Pre-heat process)
3) When beeps, place the tawa on low rack and keep both inside the microwave oven, then press start to bake. Remove when it gives a beep. Allow them to cool

bA7: Nan Khatai

- **Weight Limit**: 0.4 kg
- **Utensil**: Multicook tawa, Low rack

Ingredients

List		Weight
For Nan Khatai	Weight Limit	0.4 kg
	Maida	150 g
	Suji	50 g
	Powdered sugar	85 g
	Vanilla essence	1 tsp
	Butter	100 g
	Almonds and cashewnuts	A few

Instructions

1) Cream the butter and sugar together till it turns fluffy.
2) Add vanilla essence followed by maida and suji.

3) Make a dough out of this mixture.
4) Make medium sized balls and put cashewnut on the top of each piece. Arrange them on tawa and keep aside.
5) Select menu, then press start. (Pre-heat process) When beeps, keep the tawa on low rack, then press start.
6) When beeps, place the tawa, then press start.

bA8: Masala Biscuits

- **Weight Limit**: 0.2 kg
- **Utensil**: Low rack, Multicook tawa

Ingredients

List		Weight
For Masala Biscuits	Weight Limit	0.2 kg
	Maida	100 g
	Butter	50 g
	Sugar	50 g
	Baking powder	1 tsp
	Salt, Chilli powder, Coriander powder	As per taste

Instructions

1) Sieve maida and baking powder together. Cream butter and sugar together.
2) Add maida to the butter and cream mixure. Add salt, chilli powder and coriander powder. Mix them well adding little water (if required) to form a soft dough.
3) Roll out the dough and shape into biscuits with the help of a biscuit cutter.
4) Select menu, then press start. (Preheat process)
5) When beeps, keep the biscuits on the multicook tawa and place the tawa on low rack, then press start.

bA9: Lamington Cake

- **Weight Limit**: 0.4 kg
- **Utensil**: Low rack, Metal cake tin, Microwave safe glass bowl

Ingredients

List		Weight
For Lamington Cake	Weight Limit	0.4 kg
	Maida (Refined Wheat flour)	100 g
	Powdered sugar	75 g
	Butter	75 g
	Eggs	1 no.
	Baking powder	1 tsp
	Vanilla essence	1 tsp
	For Lamington solution - Coco powder	2 tbsps
	Powdered Sugar	1 tbsp
	Water	2 cups
	Desiccated coconut	As required

Instructions

1) Sieve maida, baking powder. In a bowl add powdered sugar and butter, then beat well. Add eggs and essence and again beat well. Add maida to this. For spoon dropping consistency add milk or water. Pour the mixture in a greased cake tin.
2) Select menu. press start. (Preheat process).
3) When there is a beep put the tin on low rack. Press start to bake. Remove when it gives a beep.
4) In Microwave safe glass bowl add water, coco powder and cornflour. put in the microwave. Press start. When it gives a beep remove and cool. Cut the cake in to squares and dip the pieces in the coco solution on all sides. Roll these in the desiccated coconut and serve.

bA 10: Doughnuts

- **Weight Limit**: 0.2 kg
- **Utensil**: Multicook tawa, Low rack

Ingredients

List		Weight
For Doughnuts	Weight Limit	0.2 kg
	Maida	200 g
	Yeast	0.5 tbsp
	Luke warm milk	100 ml
	Powdered sugar	50 g
	Nutmeg powder	A pinch
	Egg	0.5 (beaten)
	Vanilla essence	0.25 tsp
	Butter	1 tbsp

Instructions

1) Dissolve yeast in milk and set aside for 5 minutes to prepare yeast mixture.
2) Add sugar and butter to milk and dissolve. Add to yeast mixture.
3) Now add maida, egg, vanilla essence and nutmeg powder and make a soft dough. Keep it covered for 1 hour. Roll out the dough to 0.5 inch thickness. Cut it with a doughnut cutter.
4) Select menu, then press start. (Pre-heat process) When beeps arrange the doughnuts on the tawa and keep tawa on a low rack, then press start.

NOTE

- If the dough is too dry add milk and if too soft then add maida.

bA11: Whole Wheat Cookies

- **Weight Limit**: 0.3 kg
- **Utensil**: Multicook tawa, Low rack

Ingredients

List		Weight
For Whole Wheat Cookies	Weight Limit	0.3 kg
	Whole wheat flour	200 g
	Brown sugar	100 g
	Granulated sugar	50 g
	Butter	100 g
	Egg	1 no.
	Vanilla essence	0.5 tsp
	Baking powder	0.5 tsp

Instructions

1) In a bowl cream brown sugar, butter, granulated sugar together and beat till fluffy. Add egg, vanilla essence, baking powder. Finally add flour and make a soft dough.
2) Roll out the dough and cut with a cookie cutter.
3) Select menu, press start (Preheat process)
4) When beeps, put the cookies on tawa and tawa on low rack. Press start to bake. Remove when it gives a beep.

bA 12: Apple cup Cakes

- **Weight Limit**: 0.4 kg
- **Utensil**: Metal muffin tray, Low rack

Ingredients

List		Weight
For Apple cup Cakes	Weight Limit	0.4 kg
	Maida	1 cup
	Apple (peeled and pureed)	0.5 cup
	Powdered sugar	0.5 cup
	Brown sugar	0.25 cup
	Butter (softened)	50 g
	Cinnamon powder, clove powder, nutmeg powder	A pinch (each)
	Eggs	2 nos.
	Chopped almonds	2 tbsps
	Baking powder	0.5 tsp

Instructions

1) In a dry and clean bowl take maida, baking powder, cinnamon powder, nutmeg powder, salt and mix with a fork and keep aside.
2) In another bowl take softened butter, powdered sugar, brown sugar and beat with a electric beater till light and fluffy. Add one egg at a time and beat. Add apple puree and again mix well.
3) Select menu, then press start. (Pre-heat process)
4) Softly mix all the dry mixture to the beaten butter and sugar mixture with a wooden spoon. Do not over mix.
5) Pour 2 tbsp batter (for each muffin) in the greased muffin tray. When beeps, keep the low rack and metal tray, then press start. Give standing time of 5 minutes.

bA 13: Cheese Straw

- **Weight Limit**: 0.2 kg
- **Utensil**: Multicook tawa, Low rack

Ingredients

List		Weight
For Cheese Straw	Weight Limit	0.2 kg
	Maida	100 g
	Grated cheese	25 g
	Butter	50 g
	Cold water	As required
	Pepper powder	0.25 tsp
	Baking powder	0.125 tsp
	Chilli powder	0.5 tsp
	Salt	0.25 tsp

Instructions

1) Sieve maida. baking powder, chilli powder and pepper powder. In a bowl add maida and butter and cheese and rub it with fingertips till it resembles breadcrumbs. Add little cold water to make a soft dough. Roll it in to 0.5 cm thick roti and cut thin strips. Twist them and put in the metal cake tin.
2) Select menu, then press start. (Preheat process).
3) When beeps, put the tawa on low rack. Press start to bake. Remove when it gives a beep.

bA 14: Vanilla Cake

- **Weight Limit**: 0.4 kg
- **Utensil**: Metal cake tin, Low rack

Ingredients

List		Weight
For Vanilla Cake	Weight Limit	0.4 kg
	Maida	100 g
	Powdered Sugar	75 g
	Butter	75 g
	Eggs	1 no.
	Baking Powder	1 tsp
	Vanilla essence	1 tsp

Instructions

1) Sieve maida, baking powder. In a bowl add powdered sugar and butter and beat well. Add eggs and essence and again beat well. Add maida to this. For spoon dropping consistency add milk or water. Pour the mixture in a greased cake tin.
2) Select menu, then press start. (Pre-heat process)
3) When beeps, keep the cake tin on low rack, then press start.

bA 15: Chocolate Cookies

- **Weight Limit**: 0.3 kg
- **Utensil**: Multicook tawa, Low rack

Ingredients

List		Weight
For Chocolate Cookies	Weight Limit	0.3 kg
	Maida	200 g
	Powdered Sugar	100 g
	Butter	75 g
	Baking Powder	A pinch
	Cocoa Powder	2-3 tbsps
	Vanilla essence	0.25 tsp

Instructions

1) Sieve maida. cocoa powder and baking powder together. In a bowl cream butter and sugar together.
2) Add maida to the creamed butter and sugar.Add vanilla essence.
3) Mix well to make a soft dough.
4) Roll out the dough on rolling board and out with a cookie cutter.
5) Select the menu, then press start. (Preheat process)
6) When beeps, place the cookies on tawa and place the tawa on low rack. Press start.

Cooking Aid

UC 1: Keep Warm

- **Weight Limit**: 0.3 kg
- **Utensil**: Microwave safe bowl

Instructions

1) Any cooked food with cover (Rice, Dal, Subzi, Halwa, Upma etc.) Select category and press start.
2) When beeps, mix well and press start. When beeps, mix well and press start.

UC2: Defrost Veg

- **Weight Limit**: 0.2 ~ 0.5 kg
- **Utensil**: Microwave safe bowl

Instructions
Veg - (Paneer, Green Peas, Corn etc.)

1) Take in Microwave Safe Bowl, select category and weight, then press start.
2) When beeps, turn the food. Press start.

UC3: Defrost Non Veg

- **Weight Limit**: 0.5 ~ 1.0 kg
- **Utensil**: Microwave safe bowl

Instructions
Non-Veg - (Chicken, Mutton etc.)

1) Take in Microwave Safe Bowl, select category and weight, then press start.
2) When beeps, turn the food. Press start.

UC4: Dehumidification

- **Weight Limit**: 0.3 kg
- **Utensil**: Microwave safe bowl

Instructions
Namkin, Biscuits, Bhujia, Papad and Wafers etc.

1) In Microwave safe bowl add the food to be dehumidified. Select category and press start.

UC5: Disinfect Aid

- **Weight Limit**:
- **Utensil**: Microwave safe glass utensil, Empty cavity

Instructions

1) Aid in disinfecting Microwave safe glass utensils - Keep the empty utensil and select category, then press start.
2) Aid in cleaning the cavity- Keep the cavity empty. Select category and press start. When time ends (beeps), clean the cavity with damp cloth.

   Note: The oven has a function Disinfect Aid which helps in disinfecting the Microwave safe glass utensil thereby giving clean utensils/cavity.

UC6: Pizza Base

- **Weight Limit**: 0.2 kg
- **Utensil**: Low rack, Multicook tawa

Ingredients

List		Weight
For Pizza Base	Weight Limit	0.2 kg
	Maida	200 g
	Yeast	1 tbsp
	Salt	0.5 tsp
	Sugar	1 tsp
	Water	As required

Instructions

1) In a bowl add maida, yeast, salt and sugar. Mix well, add water and make a soft dough. Roll out the dough to 150 mm to 180 mm and keep on dusted tawa. Prick with a fork.Keep for half to 1 hour in a dark place.
2) Select category and press start. (Pre-heat process)
3) When beeps, keep the tawa on low rack. Press start.

NOTE

- Do not put anything in the oven during Pre-heat mode.

UC7: Yeast Dough

- **Weight Limit**: 0.3 kg
- **Utensil**: Microwave safe glass bowl

Ingredients

List		Weight
For Yeast Dough	Weight Limit	0.3 kg
	Maida	300 g
	Yeast	1 tbsp
	Salt	0.5 tsp
	Sugar	1 tsp
	Water	As required

Instructions

1) In Microwave safe glass bowl add maida, yeast, salt and sugar. Mix well, add water and make a soft dough.
2) Select category and press start. Rest for 3 minutes. Now remove.

UC8: Boil Potatoes

- **Weight Limit**: 0.3 kg
- **Utensil**: Glass tray

Ingredients

List		Weight
For Boil Potatoes	Weight Limit	0.3 kg
	Potato	300 g

Instructions

1) Take potatoes and pierce with fork or knife from all side and keep in a microwave on a glass tray. And press start.
2) Boiled potatoes are ready for use.

UC9: Lemon Squeeze

- **Weight Limit**: 5 pcs
- **Utensil**: Glass tray

Ingredients

List		Weight
For Lemon Squeeze	Weight Limit	5 pcs
	Lemon	5 pcs

Instructions

1) Take 5 nos. of lemons and keep on glass tray of microwave oven.
2) Now select menu and press start.
3) When beeps, take out lemons and squeeze it to get more juice out of them.

UC 10: Garlic Peel

- **Weight Limit**: 10 cloves
- **Utensil**: Glass tray

Ingredients

List		Weight
For Garlic Peel	Weight Limit	10 cloves
	Garlic Cloves	10 nos.

Instructions

1) Take 10 cloves of garlic andand keep in Microwave safe glass tray of microwave oven.

2) Select menu and press start.
3) When beeps, take out cloves will slide right out of their skin, hassle free.

UC 11: Tear Free Onions

- **Weight Limit**: 5 pcs
- **Utensil**: Glass tray

Ingredients

List		Weight
For Tear Free Onions	Weight Limit	5 pcs
	Onions	5 nos.

Instructions

1) Take 5 onions andand pierce it with knife andand keep in Microwave safe glass tray of microwave oven.
2) Select menu and press start.
3) When beeps, take out onions and peel it off and chop easily with almost no tears in eyes.

UC 12: Crispy Nuts

- **Weight Limit**: 0.1 kg
- **Utensil**: Microwave safe flat glass dish

Ingredients

List		Weight
For Crispy Nuts	Weight Limit	0.1 kg
	Nuts	100 g
	Oil	As required

Instructions

1) In a microwave safe flat glass dish add drops of oil, nuts. Mix well.
2) Select category and weight, then press start.
3) Serve plain or with chaat masala.

Steam Clean

SL 1: Steam Clean

- **Weight Limit**: 0.3 kg
- **Utensil**: Microwave safe bowl

List		Weight
For Steam clean	Weight Limit	0.3 kg

Instructions

1) Take 300 ml water in a Microwave safe bowl, add 1 tbsp vinegar or lemon juice. Select category and press start.
2) When beeps, wipe with soft and clean napkin. Press start.
3) When beeps over, wipe with soft and clean napkin after taking out power plug.

NOTE

- Use this feature to aid in cavity cleaning.

Two Recipes for Beginners

Roasted Papad

Papad

1 Place the raw papad at the centre of glass tray.

2 Select microwave oven 100% power level and cook time, then press start.

3 After papad cooking give standing time of 30-45 seconds.

Multiple papads
Place multiple papads over one another.

Crispy papad

1 Press start once without papad.

2 Sprinkle little water or oil over the papad.

3 After beep, place the papad at the at the center, then press start.

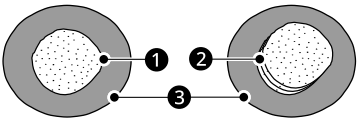

❶ Papad

❷ Multiple Papads

❸ Glass Tray

NOTE

- The cooking time may vary.
  - As per the composition of the papad material.
  - As per the Quantity of papad used.

Pop Corn

1 Place the pop corn bag to the glass tray properly as instructed on packing.

2 Press start to set 3~4 minutes.

3 Remove the bag after poping sound has stopped. Take care that bag corners do not touch sides while rotating.

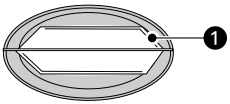

❶ Pop Corn

NOTE

- Attend poping process carefully.
- Do not overheat as cause flash fire.

List of Ingredients

Spices

English name	Hindi name
Asafoetida	Hing
Basil	Tulsi
Bay Leaf	Tej Patta
Cardamom, black	Moti Elaichi
Cardamom, green	Choti Elaichi
Carom seeds	Ajwain
Cinnamon	Dalchini
Cloves	Laung
Coriander Seeds	Sabut Dhania
Cumin seeds	Jeera
Dry Mango Powder	Amchur
Dry red chilli	Sukhi Sabut Lal Mirch
Fennel	Saunf
Fenugreek leaves, dried	Kasuri Methi
Fenugreek seeds	Methidana
Mace	Javitri
Mustard seeds	Sarson , Rai
Nutmeg	Jaiphal
Onion seeds	Kalonji
Oregano	Oregano
Pepper	Kali Mirch
Pomegranate seeds, dried	Anardana
Poppy seeds	Khus Khus
Red Chilli	Lal Mirch
Salt	Namak
Turmeric	Haldi
Thyme	Thyme

Vegetables

English name	Hindi name
Amaranth	Chavli
Baby corn	Baby corn
Bittergourd	Karela
Bottlegourd	Ghiya
Brinjal/Eggplant	Baigan
Broccoli	Hari Phool Gobhi
Cabbage	Pata Gobhi/Bandh Gobhi
Capsicum	Shimla Mirch
Cauliflower	Phool Gobhi
Carrot	Gajar
Celery	Ajmod
Cluster Beans	Gavar Ki Fali

English name	Hindi name
Coriander leaves	Hara Dhania
Colocasia	Arbi
Cucumber	Kheera
Curry leaves	Curry Patta
Drumsticks	Drumsticks
French beans	France beans
Garlic	Lehsun
Ginger	Adrak
Elephant Foot Yam	Jimikand
Lady Finger	Bhindi
Lemon	Nimbu
Lemon Grass	Lemon Grass
Lettuce	Lettuce
Lime	Nimbu
Mint	Pudina
Mushroom	Kukurmutta
Olives	Jafiun
Onion	Pyaz
Parsley	Ajmoda
Potato	Aloo
Peas	Hari Matar
Radish	Mooli
Red Pumpkin	LalKaddu
Snake Gourd	Torai
Spinach	Palak
Spring Onion	Hari Pyaz
Sweet Potato	Shakarkandi
Tomato	Tamatar

English name	Hindi name
Turnip	Shalgam
Chenopodium leaves	Bathua
Zucchini	Torai

Fruits

English name	Hindi name
Apple	Seb
Coconut	Nariyal
Grapes	Angoor
Mango	Aam
Papaya	Papeeta
Pineapple	Anannas
Pomegranate	Anaar
Raw Banana	Kacha Kela

Cereals

English name	Hindi name
Flattened Rice	Poha
Oats	Jaei
Puffed Rice	Murmura
Refined wheat Flour	Maida
Rice	Chawal
Sago	Sabudana
Semolina	Suji
Whole wheat broken	Daliya
Wheat Flour (whole)	Gehun ka Atta

Pulses

English name	Hindi name
Bengal Gram Dal	Chana Dal
Bengal Gram flour	Besan
Black Gram Dal	Urad Dal
Green Gram Dal (Dehusked)	Moong Dal (Dhuli)
Kidney Beans	Rajma
Lentils (Dehusked)	Masoor Dal (Dhuli)
Red Gram Dal	Arhar/Tuvar Dal
Soyabean	Soyabean

Dry Fruits

English name	Hindi name
Almonds	Badam
Cashewnuts	Kaju
Pistachio	Pista
Raisins	Kishmish
Walnuts	Akhrot
Peanuts	Mungfali

Fats and Oils

English name	Hindi name
Butter	Makhan
Ghee	Ghee
Oil	Tel
Olive Oil	Jaitun Ka Tel
Mustard Oil	Sarson Ka Tel
Sesame Oil	Til Ka Tel

Miscellaneous

English name	Hindi name
Bread crumbs	Bread crumbs
Cornflour	Cornflour
Coffee	Coffee
Cottage cheese	Paneer
Curd	Dahi
Eggs	Ande
Honey	Shahed
Jaggery	Gud
Khoa	Khoa
Lotus Seeds	Makhana
Milk	Doodh
Powdered Sugar	Bura
Sugar	Cheeni
Tamarind	Imli
Tea	Chai
Saffron	Kesar
Sprouts	Ankur
Vinegar	Sirka

Utensils Guide

Microwave-Safe Utensils

- **Ovenproof Glass**: Glassware that is heat-resistant is microwave-safe. This would include all brands of oven tempered glass utensils. However, do not use delicate glassware, such as tumblers or wine glasses, as these might shatter as the food warms.
- **Pottery Stoneware Ceramic**: Use bowls, cups, serving plates, pottery, stoneware, ceramic, and platters without metallic rim. Many containers

made of these materials are microwave-safe, but test them before use.

- **Plastic**
  - **Plastic Storage Containers**: These can be used to hold foods that are to be quickly reheated. However, they should not be used to hold foods that will need considerable time in the oven as hot foods will eventually warp or melt plastic containers.
  - **Plastic Cooking Bags**: Provided they are specially made for cooking, cooking bags are microwave safe. Remember to make a slit in the bag so that steam can escape. Never use ordinary plastic bags for cooking in the microwave oven, as they will melt and rupture.
  - **Plastic Microwave Utensils**: A variety of shapes and sizes of microwave utensils are available. You may be able to use items you already have on hand rather than investing in new kitchen equipment.
- **Paper**: Use paper towels, waxed paper, paper napkins, and paper plates with no metallic rim or design. Paper plates and containers are convenient and safe to use in the microwave oven, provided that the cooking time is short and foods to be cooked are low in fat and moisture. Paper towels are also very useful for wrapping foods and for lining baking trays in which greasy foods such as bacon are cooked. In general, avoid coloured paper products as the color may run. Some recycled paper products may contain impurities which could cause arcing or fires when used in the microwave.
- **Tableware**: Many containers made of pottery, stoneware and ceramic are also microwave-safe. If in doubt consult the manufacturer's literature or perform the microwave test. Do not put plates with painted decoration in the oven, as the paint may contain metal and cause arcing.

Microwave-Unsafe Utensils

- **Metal Containers** and **Metal Decoration**
  - Never use metal or metal-rimmed utensils in the microwave oven.
  - Microwaves cannot penetrate metal. They will bounce off any metal object in the oven and cause arcing, an alarming phenomenon that resembles lightning.
  - Metal shields the food from microwave energy and produces uneven cooking. Also avoid metal skewers, thermometers, foil trays, metal-rimmed or metal-banded dinnerware, casserole dishes, etc. The metal rim interferes with normal cooking and may damage the oven.

Testing Utensils before Use

Most heat resistant and non-metallic utensils is safe for use in your oven. However, some utensils may contain materials that are not suitable for microwave use. Follow the steps below to find out if utensils can be used in the microwave.

1. Place the container in question and a glass measuring cup filled with water next to each other inside the oven.

2. Heat the container and glass measuring cup for 1 minute at HIGH power.
   - If the water heats up but the container remains cool to the press, the container is microwave-safe.
   - If the temperature of the water does not change but the container becomes warm, it is not safe for use in the microwave oven.

⚠ CAUTION

- Some items with high lead or iron content are not suitable for microwave cooking.
- Utensils should be checked to ensure that it is suitable for use in the microwave.
- Always be careful when taking utensils out of the oven. Some dishes absorb heat from the cooked food and may be hot.

Cooking Guide

Cooking Tips

Carefully monitor the food in the microwave oven when it is cooked. Directions given in recipes to elevate, stir, etc., are the minimum steps

recommended. If the food seems to be cooked unevenly, simply make the necessary adjustments to correct the problem.

- **Covering**: Cover the plate with a lid, parchment paper (not waxed paper) or cling plastic wrap for use in the microwave oven. A cover traps heat and steam, which help to cook the food more quickly.
- **Stirring**: Stir from the outside towards the center, as food at the outside of the dish heats more quickly.
- **Standing Time**: Standing time allows foods to finish cooking and also helps flavors blend and develop. Foods are often allowed to stand for 3 to 10 minutes after being removed from the oven.
- **Cooking Time**: Set the cooking time according to the temperature of the ingredients. Ice-cold ingredients take considerably longer to cook than room temperature ingredients.
- **Sprinkling**: Low-moisture foods such as roasts and vegetables should be sprinkled with water before cooking or covered to retain moisture.
- **Arranging**: The upper portion of thick foods will be cooked more quickly than the lower portion. Turn food over several times during cooking.
- **Piercing**: Pierce foods that are enclosed in a shell, skin or membrane before cooking to prevent them from bursting.
  - Such foods include yolks and whites of eggs, clams, oysters, potatoes, and other whole vegetables and fruits.
- **Shape of Food**: Microwaves penetrate only about 2 cm into food. Only the outer edge of food is cooked by microwave energy; the rest is cooked as the heat moves inward.
  - Place the thickest portions of foods like meat, poultry or fish toward the outside of the utensils to help them cook more evenly.
  - If possible, shape foods into thin rounds or rings.
- **Density**: Light, porous food such as cakes and breads are cooked more quickly than heavy, dense foods such as roasts and casseroles.
- **Bones and Fat**: Bones conduct heat and fat cooks more quickly than meat. Take care with bony or fatty cuts of meat.
- **Quantity**: The more food you place in the oven, the longer the required cooking time.
- **Shielding**: Cover the corners of square dishes with strips of aluminum foil to prevent overcooking. Do not use too much foil, and make sure the foil is secured to the dish. If the foil gets too close to the oven walls during cooking, it can cause arcing.

TROUBLESHOOTING

FAQs

Frequently Asked Questions

Q: **What's wrong when the oven light will not glow?**

A: There may be several reasons why the oven light will not glow. Either the light bulb has blown or the electric circuit has failed.

Q: Does microwave energy pass through the viewing screen in the door?

A: No. The holes, or ports, are made to allow light to pass; they do not let microwave energy through.

Q: Why does the beep tone sound when a button on the control panel is touched?

A: The beep tone sounds to assure that the setting is being properly entered.

Q: Will the microwave function be damaged if it operates empty?

A: Yes. Never run it empty.

Q: Why do eggs sometimes pop?

A: When baking, frying, or poaching eggs, the yolk may pop due to steam build up inside the yolk membrane. To prevent this, simply pierce the yolk before cooking. Never microwave eggs in the shell.

Q: Why is standing time recommended after microwave cooking is over?

A: After microwave cooking is finished, food keeps on cooking during standing time. This standing time finishes cooking evenly throughout the food. the amount of standing time depends on the density of the food.

Q: Why doesn't my oven always cook as fast as the cooking guide says?

A:

- Check your cooking guide again to make sure you have followed directions correctly, and to see what might cause variations in cooking time.
- Cooking guide times and heat settings are suggestions, chosen to help prevent overcooking, the most common problem in getting used to this oven.
- Variations in the size, shape, weight and dimensions of the food require longer cooking time.
- Use your own judgment along with the cooking guide suggestions to test food conditions, just as you would do with a conventional cooker.

Before Calling for Service

If following symptoms appear while using the microwave oven, check it one more time. It may not be a failure.

Operation

Symptoms	Possible Cause & Solution
Microwave oven does not start	**Power cord is unplugged, door is open. Or, cooking time is not set.** • Plug in power cord. • Close oven door. • Set cooking time.

Symptoms	Possible Cause & Solution
Microwave oven does not start	**A fuse in your home may be blown or the circuit breaker tripped. Or the appliance is connected to a GFCI (Ground Fault Circuit Interrupter) outlet, and the outlet's circuit breaker has tripped.** • Check the main electrical box and replace the fuse or reset the circuit breaker. Do not increase fuse capacity. If the problem is a circuit overload, have it corrected by a qualified electrician. • Reset the circuit breaker on the GFCI. If the problem persists, contact an electrician.
Arcing or Sparking	**Utensils is not microwave safe. Or, operated the oven when it is empty.** • Use microwave-safe utensils. When in doubt, test utensils before use. • Do not operate oven while it is empty.
Unevenly Cooked Foods	**Utensils is not microwave safe. Or, cooking settings was wrong.** • Test utensils to make sure it is microwave safe. • Do not cook without the glass tray. • Turn or stir food while cooking. • Defrost food completely before cooking. • Use correct cook time and power level.
Overcooked Foods	**Cooking settings and methods are wrong.** • Change cook time or power level.
Undercooked Foods	**Utensils is not microwave safe. Or, cooking settings was wrong.** • Test that utensils is microwave safe. • Defrost food completely before cooking. • Change cook time or power level. • Make sure that ventilation ports are not blocked.

APPENDIX

Warranty

Warranty and Service Information

Warranty

The Microwave oven comes with 1 year warranty on all parts (except Plastic parts, Consumables, Loose Plastic Parts, Glass) and thereafter a 9 years additional warranty only on the Charcoal Lighting Heater from the date of purchases on producing the tax paid invoice of the product provided always that the warranty card bears the rubber stamp, date and signature of our authorized dealer.

9 YEAR ADDITIONAL WARRANTY ON THE CHARCOAL LIGHTING HEATER

The 9 Year warranty on the Charcoal Lighting Heater will continue even after the expiry of 1 year period from the date of purchase. This warranty covers Charcoal Lighting Heater only. During the additional warranty period, it does not cover parts such as PCB/Controller Assembly, High Voltage Diode, High Voltage Capacitor, Magnetron, Quartz Heater, Convection Heater Assembly, High Voltage Transformer. Thermostat, Turn Table Motor. Cavity, etc. The standard visiting charges will be applicable within municipal limit of town where LG Electronics India Ltd. (LGEIL) has its Authorized Service Centre, Service Outside municipal limit will attract to and fro travelling, other incidental expense in addition to standard visiting charges, as per the prevailing from time to time. During the additional warranty period only the parts replaced or repaired shall be free of costs, but service charges shall always be payable by the customer.

TERMS & CONDITIONS

1. The warranty is confined to the first purchaser of the Microwave oven only & is non-transferable.

2. Repairs & replacements will be carried out through the Authorized Service Centres of LG Electronics India Ltd. (hereinafter referred as LG or LGEIL). Customer may place their service call through the LG customer care or through the dealer from whom the product has been purchased. In case the customer shifts the place of residence during warranty period, it is advised to contact our helpline.

3. Repair under warranty shall be carried out by an authorized service personnel only. The details of centralized helplines are attached.

4. For units installed beyond municipal limits of the jurisdiction of company's Authorized Service Centre, it is responsibility of the purchaser to contact the nearest authorized service centre and bring the unit to the authorized service at its own cost and risk. All expense incurred in collecting the units or parts thereof from the company's authorized service centre, as well as expenses incurred with deputing of service personnel/ technician toward conveyance and other incidentals etc. will be borne by the customer. Local charges for transportation and handling charges may vary from location to location. Customers are advised to verify before. In case the customer desires to bring the unit on its own to the Authorized Service Centre, the same shall be at its own risks & consequences.

5. The concerned authorized service centre will advise the customer whether to effect the repairs at site or at the authorized service centre.

6. Call registered with the centralized helpline/Authorized service centre, wherein only cleaning of the unit/ parts in the unit due to dust accumulation on portions of the units are not to be considered as defects.

7. In case of repairs or replacement of any part/s of the unit, this warranty will thereafter continue and remain in force only for the unexpired period of the warranty. LGEIL may use parts that are new or refurbished and equivalent to new in performance and reliability. Replacement of parts would be purely at the discretion of LGEIL alone. In case the replacement of the entire unit is being made, (subject to the sole discretion of LGEIL), the same model shall be replaced and in the event such model has been discontinued, it shall be replaced with the model price equivalent at the time of purchase.

8. In case of any damage to the product/customer abuse/repairs by un-authorized personnel's/ misuse detected/ by the Authorized Service Centre personnel, the warranty conditions are not applicable and repairs will be done subject to availability of parts and on a chargeable basis only.

9. This warranty shall not cover any consequential or resulting liability, damage or loss to property or life arising directly or indirectly out of any defect being noticed in the equipment during warranty period of the Microwave oven. The company's obligation under this warranty shall be limited to repair or providing replacement of defective parts only under the warranty period

10. The company or its Authorized Service Centre reserves the right to retain any part/s or component replaced its discretion, in the event of defect being noticed in the equipment during warranty period.

11. While the company will make every effort to carry out repairs at the earliest, it however is made expressly clear that the company is under no obligation to do so in a specified period of time.

12. Warranty does not cover accessories external to the equipment supplied by the dealer.

13. If any coloured internal or external components are replaced, there will be commitment to ensure that the shades match with the original or other components. The replaced shades, patterns, tints may vary from the customer's unit due to continuous usage of the unit. Any matching components changed at customer's request will be chargeable basis except the component which actually needed.

14. In the event of any unforeseen circumstance, and spares not being available, the company's prevailing depreciation rules will be binding on the purchaser to accept as a commercial solution in lieu of repairs.

15. Free Installation or Demo of the product, can be availed only once & within 3 months from the date of purchase.

16. Any extended warranty offered by LGEIL has to be supported by relevant proof.

17. Warranty shall expire after the warranty period as mentioned above even if the Microwave oven may not be in use for any time during the warranty period for any reason.

18. Only courts in state of Delhi and places where LGEIL has its branch office shall have the jurisdiction for settling any claims, disputes arising under the warranty.

Warranty is not applicable in any of the following cases :

1. The warranty card is not completed properly at the time of purchase.

2. The completed warranty card is not presented to authorized service personnel at the time of service of the product.

3. The product is not operated according to instructions given in the Operating Instruction Booklet/ Owner's Manual.

4. The product is used for commercial purposes.

5. The product has failed under certain conditions like water logging, flood, fire, misuse etc.

6. Defects/malfunction are caused by improper or reckless use, which shall be determined by the company personnel.

7. Any repair work is carried out by persons other than authorized service personnel.

8. Defect/malfunction are caused which are beyond control like lightening, abnormal voltage, Acts of God, virus etc.

9. Any issue is caused by usage of 3rd party product like voltage stabilizer, power outlet socket, MCB, extension board etc.

10. Defects/malfunction caused while in transit to service centre or purchaser's residence.

11. Defects caused by rodents bite or by pests and vermin ants/Insects/animals/birds etc.

12. The serial number is deleted, defected or altered.

13. Damage is caused to the product or any part/s due to transportation or shifting.

14. Any accessory external to the equipment are supplied by dealer or LG.

CUSTOMER'S COPY

CUSTOMER'S COPY

MODEL No. :
UNIT SERIAL No. :

DATE OF PURCHASE :

CUSTOMER'S NAME & ADDRESS	DEALER'S NAME & ADDRESS
TEL.	TEL.
Customer's Signature	Dealer's Signature

This card is valid only if it is filled in and stamped by our authorised dealer on the date of purchase.

Memo

Memo

Memo

Brand Owner (LG Electronics India Ltd.) & Packaging Type Details as per PWM Rules

Packaging type	Company name	Registration number	Thickness
Plastic Sheet	LG Electronics India Ltd	BO-13-000-07-AAACL1745Q-22	0.05 mm and above
Multilayered bag	LG Electronics India Ltd		N/A

LG Electronics India Ltd.

Phone	08069379999 1800 315 9999 [Toll Free]
WhatsApp No.	9711709999
Mobile Application	'LG Service India Mobile App' available at Google Play
SNS	www.facebook.com/LGIndiaPage www.twitter.com/LGIndia
Address	Regd. Office: LG Electronics India Ltd., A-24/6 Mohan Cooperative Industrial Estate, Mathura Road, New Delhi-110044 CIN No. U32107DL1997PLC220109

24 hours, 7 days a week (except National Holidays)