LG
Life's Good

ENGLISH

OWNER'S MANUAL

LED LCD Monitor (LED Monitor*)

Please read this manual carefully before operating your set and retain it for future reference.

LED LCD MONITOR MODEL

22MB35PH

www.lg.com

ENGLISH

CONTENTS

3 LICENSE

4 ASSEMBLING AND PREPARING

4 Unpacking
5 Parts and buttons
6 Moving and Lifting the Monitor
7 Setting up the Monitor set
7 - Attaching the Stand Base
7 - Detaching the stand base
8 - Detaching the stand body
9 - Mounting on a table
9 - Adjusting the angle
10 - Adjusting the stand height
10 - Using the Kensington locking device
11 - Swivel stand
11 - Using the Pivot function
12 - Mounting on a wall

13 USING THE MONITOR SET

13 Connecting to a PC
13 - D-SUB connection
13 - DVI-D connection
13 - HDMI connection
14 Connecting to AV Devices
14 - HDMI connection
14 Connecting to External Devices
14 - Peripheral device connection

16 CUSTOMIZING SETTINGS

17 Customizing Settings
17 - Menu Settings
18 -Picture
19 -Color
20 -Display
20 -Audio
21 -Others
22 READER Setting
23 -SMART ENERGY SAVING

24 TROUBLESHOOTING

26 SPECIFICATIONS

26 22MB35PH
27 Preset Modes (Resolution)
27 Indicator

28 PROPER POSTURE

28 Proper posture for using the Monitor set.

LICENSE

Each model has different licenses. Visit www.lg.com for more information on the license.

The terms HDMI and HDMI High-Definition Multimedia Interface, and the HDMI Logo are trademarks or registered trademarks of HDMI Licensing Administrator, Inc.

The following content is only applied to the monitor which is sold in Europe market and which needs to meet the ErP Directive:

* This monitor is set to be turned off automatically in 4 hours after you turned on display if there is no adjustment to display.
* To make this setting be disabled, change the option to ‘Off’ in OSD menu of “Automatic Standby”.

ENGLISH

ASSEMBLING AND PREPARING

Unpacking

Check your product box for the following items. If there are any missing accessories, contact the local dealer where you purchased your product. The illustrations in this manual may differ from the actual product and accessories.

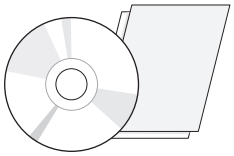

CD(Owner's Manual) / Card

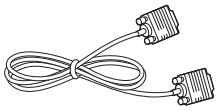

D-SUB Cable
(This cable is not included in all countries.)

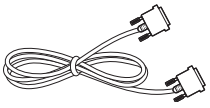

DVI-D Cable
(This cable is not included in all countries.)

Power Cord

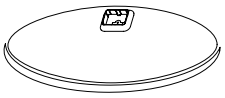

Stand Base

HDMI Cable
(This cable is not included in all countries.)

CAUTION

- Do not use any unapproved accessories to ensure the safety and product life span.
- Any damages or injuries by using unapproved accessories are not covered by the warranty.

NOTE

- The accessories supplied with your product may vary depending on the model.
- Product specifications or contents in this manual may be changed without prior notice due to upgrade of product functions.

Parts and buttons

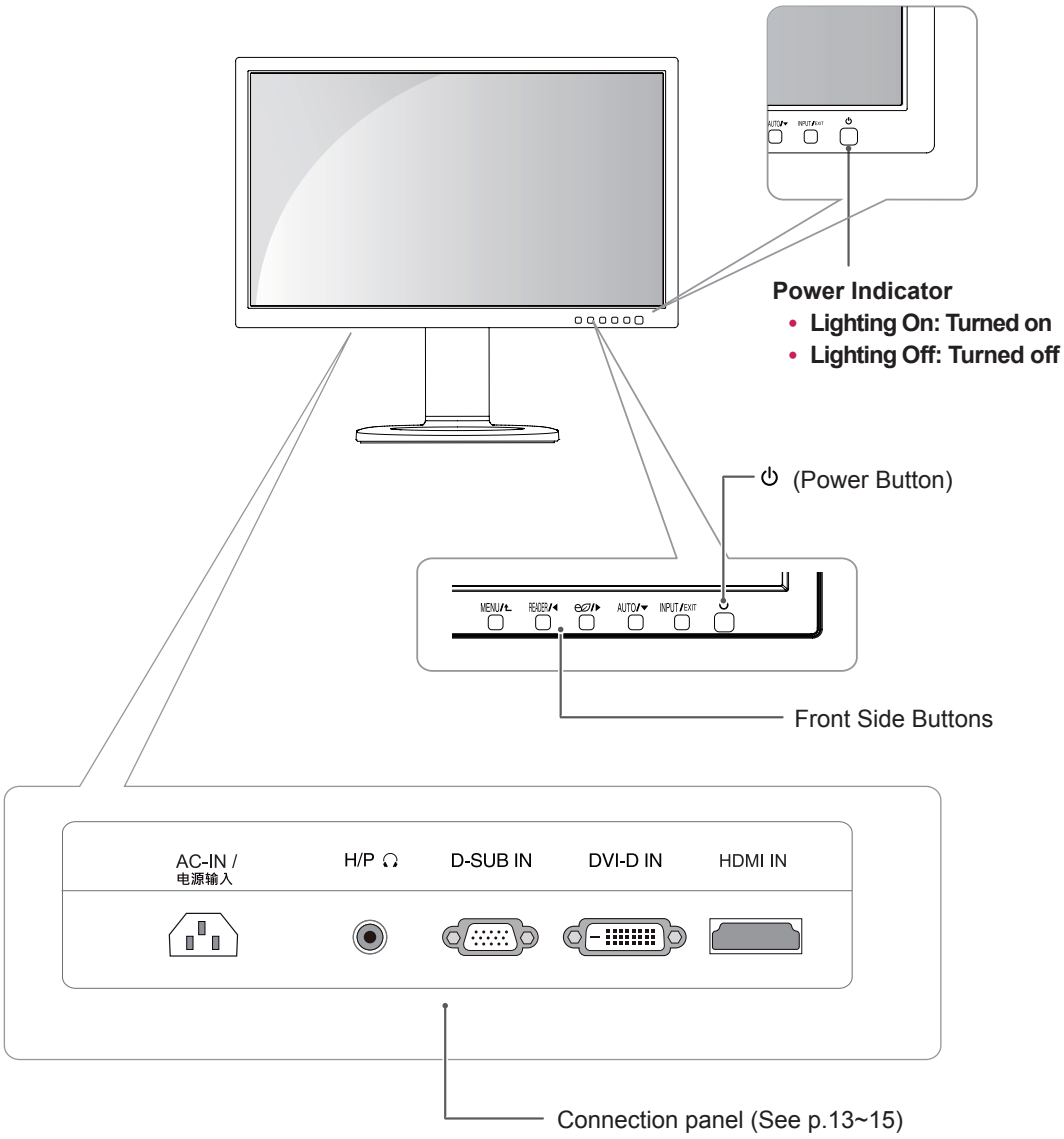

Moving and Lifting the Monitor

When moving or lifting the monitor, follow these instructions to prevent the monitor from being scratched or damaged and to ensure safe transportation regardless of its shape or size.

- It is advisable to place the monitor in the original box or packing material before attempting to move it.
- Before moving or lifting the monitor, disconnect the power cord and all cables.
- Hold the top and bottom of the monitor frame firmly. Do not hold the panel itself.

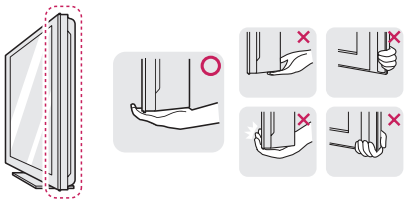

- When holding the monitor, the screen should face away from you to prevent it being scratched.

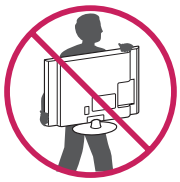

- When moving the monitor, avoid any strong shock or vibrations to the product.
- When moving the monitor, keep it upright, never turn the monitor on its side or tilt it sideways.

CAUTION

- As far as possible, avoid touching the monitor screen. This may result in damage to the screen or some of the pixels used to create images.

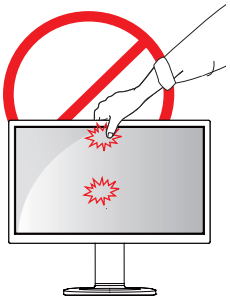

Setting up the Monitor set

Attaching the Stand Base

1 Place the Monitor set with the screen side down on a flat and cushioned surface.

CAUTION

- To protect the screen from scratches, cover the surface with a soft cloth.

2 Check the **position (at the front and rear)** of the stand body, then mount the **stand base** on the **stand body** as shown in the figure.

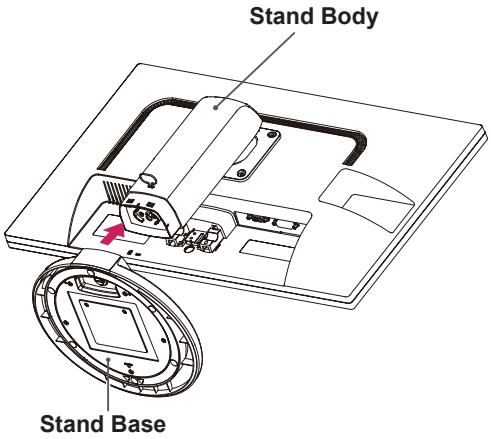

3 Using a coin, turn the screw clockwise to secure the **stand base.**

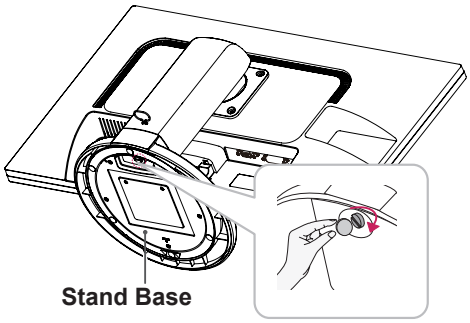

Detaching the stand base

1 Place the monitor's screen face down.
To protect the screen from scratches, cover the surface with a soft cloth.

2 Using a coin, turn the screw in the stand base counterclockwise. Detach the **stand base** from the **stand body**.

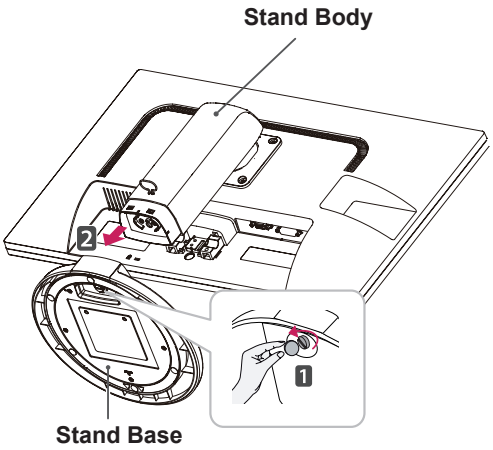

CAUTION

- The components appearing in the illustrations may look different from the actual product.
- Do not carry the monitor upside-down as this may cause it to fall off its stand, resulting in damage or injury.
- To avoid damaging the screen when lifting or moving the monitor, only hold the stand or the plastic cover. This avoids putting unnecessary pressure on the screen.
- Only remove the tape and the locking pin when the monitor is mounted on the stand base and is in an upright position. Otherwise, the stand body may protrude, which may lead to injury.

Detaching the stand body

1 Place the monitor's screen face down. To protect the screen from scratches, cover the surface with a soft cloth.

2 Using a screwdriver, remove the four screws and detach the stand from the monitor.

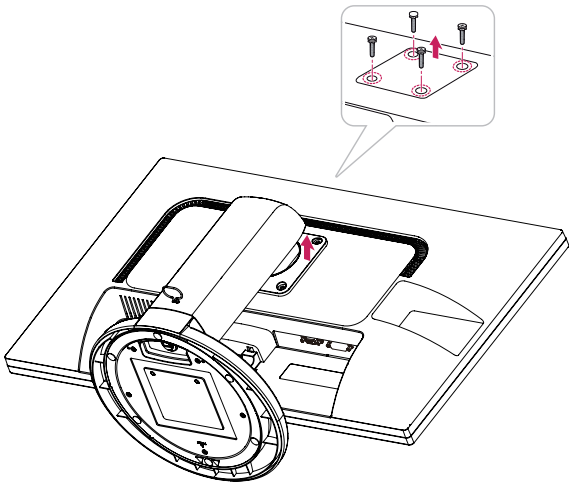

Mounting on a table

1 Lift the monitor and place it on the table in an upright position.

Install at least **100 mm** away from the wall to ensure sufficient ventilation.

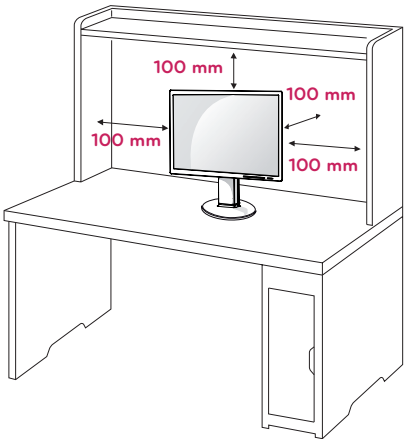

2 Connect the Power cord to the monitor, then plug the power cord into the wall outlet.

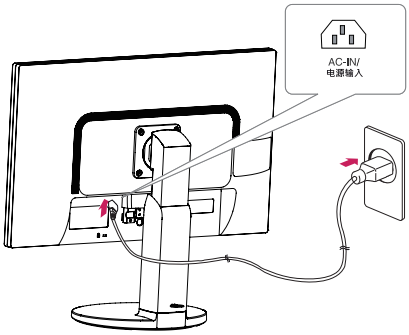

3 Press the ⏻ (Power) button on the front of the monitor to turn on the monitor.

CAUTION

- Unplug the power cord prior to moving or installing the monitor. There is risk of electric shock.

Adjusting the angle

1 Place the monitor mounted on the stand base in an upright position.

2 Adjust the angle of the screen. The angle of the screen can be adjusted up to 5° forwards and 20° backwards for a comfortable viewing experience.

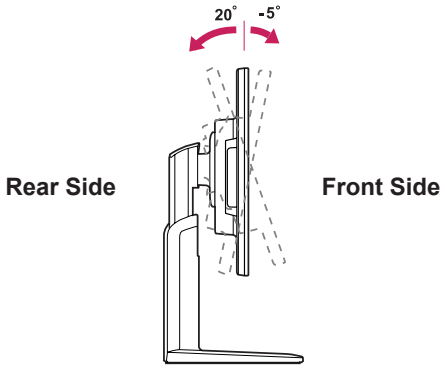

WARNING

- To avoid injury to the fingers when adjusting the screen, do not hold the lower part of the monitor's frame as illustrated below.

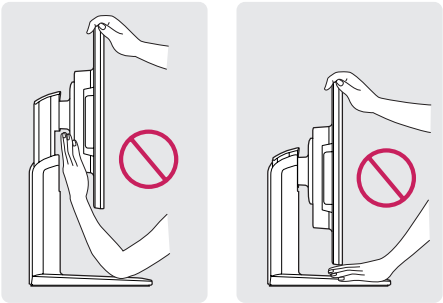

- Be careful not to touch or press the screen area when adjusting the angle of the monitor.

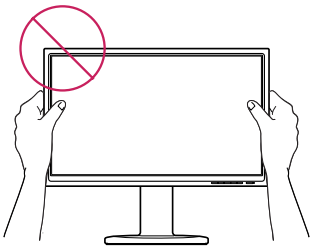

Adjusting the stand height

1 Place the monitor mounted on the stand base in an upright position.

2 Remove the **tape** attached at the bottom rear of the **stand body,** then pull out the **locking pin**.

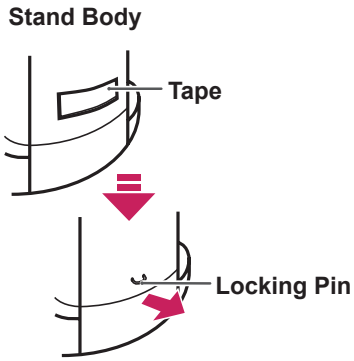

3 The height can be adjusted up to **110 mm**.

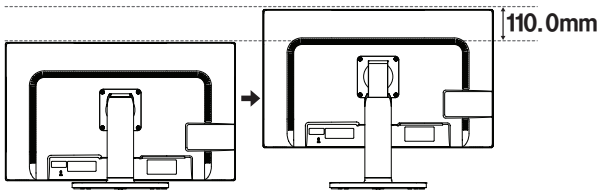

CAUTION

- Once the pin is removed, it is not necessary to re-insert it to adjust the height.

WARNING

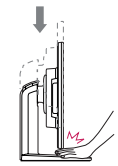

- Do not put your finger between the screen and the base (chassis) when adjusting the screen's height.

Using the Kensington locking device

The connector for the Kensington lock is located on the rear of the monitor.
For more information on installation and usage, refer to the Kensington lock user manual or visit the website at http://www.kensington.com.

Connect the monitor to the table with the Kensington lock cable.

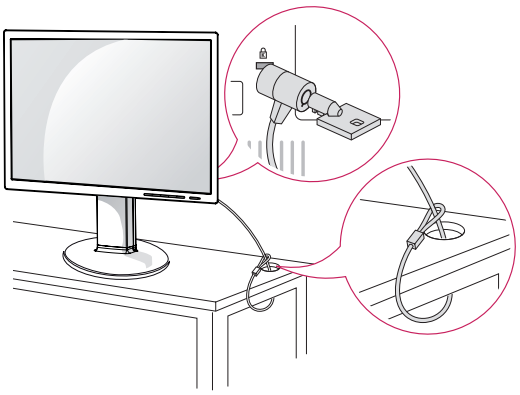

NOTE

- Using the Kensington lock is optional. The accessories can be purchased at your local electronics store.

Swivel stand

- Image shown may differ from your Monitor set.

1 Swivel 355 degrees and adjust the angle of the Monitor set to suit your view.

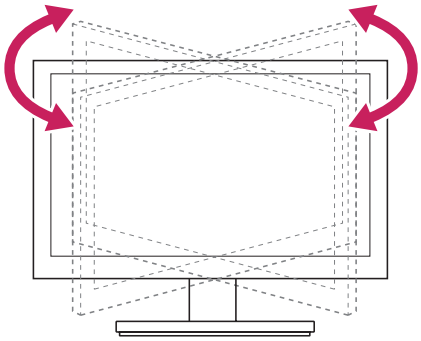

Using the Pivot function

The pivot function allows you to rotate the screen 90 degrees clockwise.

1 Lift the monitor to its highest height to utilize the Pivot function.

2 Landscape & Portrait : You can rotate the panel 90° clockwise. Please be cautious and avoid contact between the monitor head and the Stand Base when rotating the screen to access the Pivot function. If the monitor head touches the Stand Base, then the Stand Base could crack.

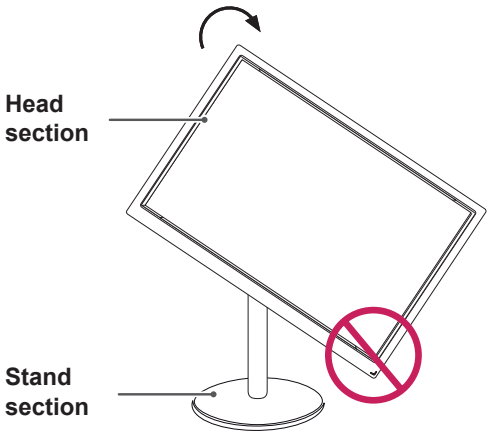

3 Be careful with the cables when rotating the screen.

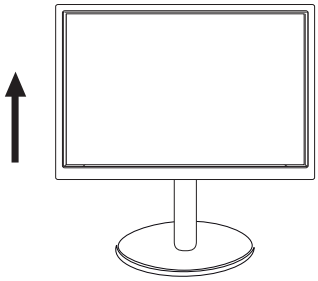

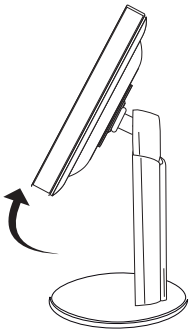

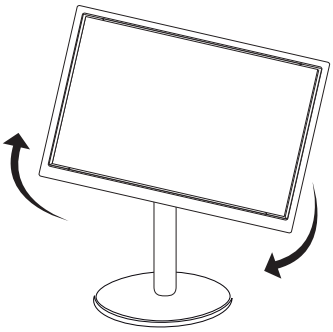

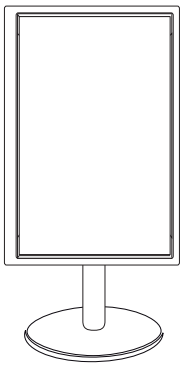

ENGLISH

Mounting on a wall

For proper ventilation, allow a clearance of 100 mm on each side and from the wall. Detailed instructions are available from your dealer, see the optional Tilt Wall Mounting Bracket Installation and Setup Guide.

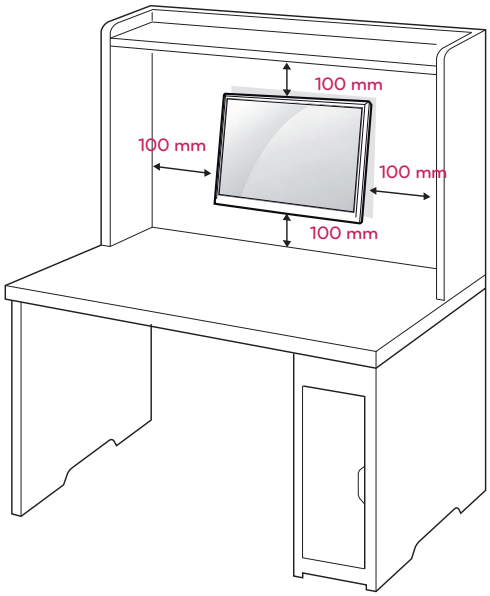

If you intend to mount the Monitor set to a wall, attach Wall mounting interface (optional parts) to the back of the set.
When you install the Monitor set using a wall mounting interface (optional parts), attach it carefully so it will not drop.

1 Please, Use the screw and wall mount interface in accordance with VESA Standards.

2 If you use screw longer than standard, the monitor might be damaged internally.

3 If you use improper screw, the product might be damaged and drop from mounted position. In this case, LG Electronics is not responsible for it.

4 VESA compatible only with respect to screw mounting interface dimensions and mounting screw specifications.

5 Please use VESA standard as below.

- 784.8 mm (30.9 inch) and under
  * Wall Mount Pad Thickness : 2.6 mm
  * Screw : Φ 4.0 mm x Pitch 0.7 mm x Length 10 mm
- 787.4 mm (31.0 inch) and above
  * Please use VESA standard wall mount pad and screws.

Model	22MB35PH
VESA (A x B)	100 x 100
Standard screw	M4
Number of screws	4

CAUTION

- Disconnect the power cord first, and then move or install the Monitor set. Otherwise electric shock may occur.
- If you install the Monitor set on a ceiling or slanted wall, it may fall and result in severe injury.
- Use only an authorized LG wall mount and contact the local dealer or qualified personnel.
- Do not over tighten the screws as this may cause damage to the Monitor set and void your warranty.
- Use only screws and wall mounts that meet the VESA standard. Any damages or injuries by misuse or using an improper accessory are not covered by the warranty.
- Screw length from outer surface of back cover should be under 8mm.

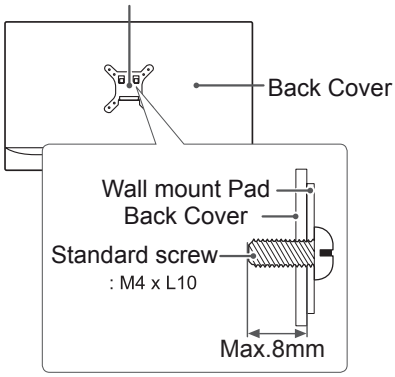

NOTE

- Use the screws that are listed on the VESA standard screw specifications.
- The wall mount kit will include an installation manual and necessary parts.
- The wall mount bracket is optional. You can obtain additional accessories from your local dealer.
- The length of screws may differ depending on the wall mount. Be sure to use the proper length.
- For more information, refer to the instructions supplied with the wall mount.

USING THE MONITOR SET

Connecting to a PC

- Your Monitor set supports Plug & Play*.
  *Plug & Play: A PC recognizes a connected device that users connect to a PC and turn on, without device configuration or user intervention.

D-SUB connection

Transmits analog video from your PC to the Monitor set. Connect the PC and the Monitor set with the supplied D-sub 15 pin signal cable as shown in the following illustrations.

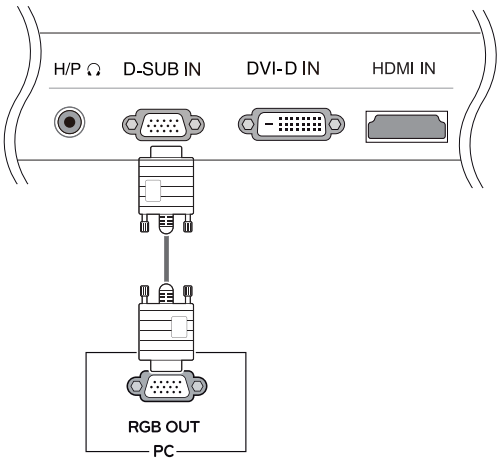

NOTE

- When using a D-Sub signal input cable connector for Macintosh

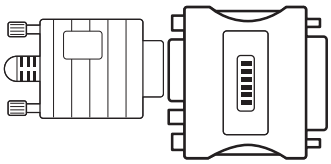

- **Mac adapter**
  For Apple Macintosh use, a separate plug adapter is needed to change the 15 pin high density (3 row) D-SUB VGA connector on the supplied cable to a 15 pin 2 row connector.

DVI-D connection

Transmits a digital video signal from your PC to the Monitor set. Connect the PC and the Monitor set with a DVI cable as shown in the following illustrations.

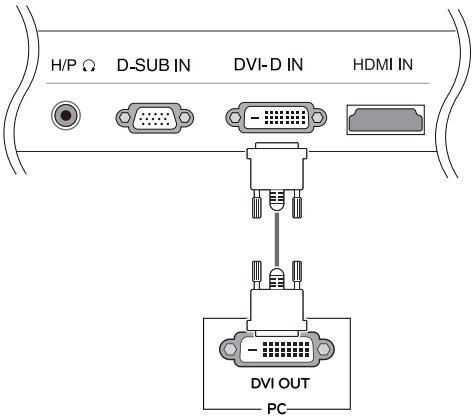

HDMI connection

Transmits the digital video and audio signals from your PC to the Monitor set. Connect the PC and the Monitor set with the HDMI cable as shown in the following illustrations.

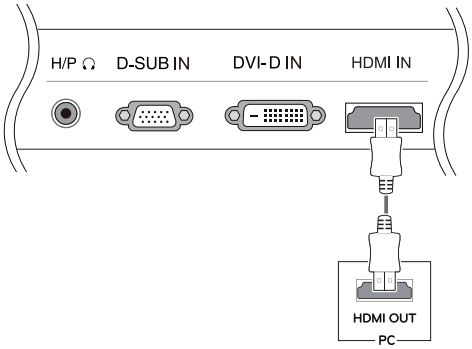

NOTE

- If you use HDMI PC, it can cause compatibility problem.

CAUTION

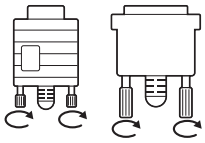

- Connect the signal input cable and tighten it by turning the screws clockwise.
- Do not press the screen with your finger for a long time as this may result in temporary distortion on the screen.
- Avoid displaying a fixed image on the screen for a long period of time to prevent image burn. Use a screensaver if possible.

NOTE

- When you want to use two PC in our Monitor, please connect the signal cable(D-SUB/ DVI-D/HDMI) respectively in Monitor set.
- If you turn the Monitor set on while it is cold, the screen may flicker. This is normal.
- Some red, green, or blue spots may appear on the screen. This is normal.

Connecting to AV Devices

HDMI connection

Transmits the digital video and audio signals from your AV devices to the monitor. Connect your AV device to the monitor with the HDMI cable as illustrated below.

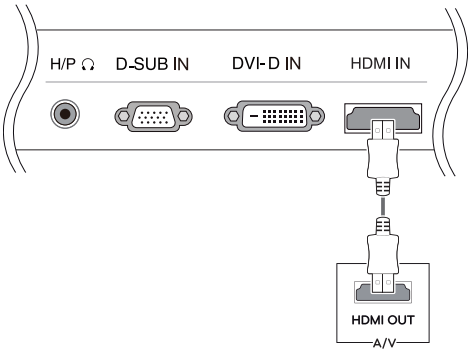

NOTE

- Using a DVI to HDMI cable may cause compatibility issues.

Connecting to External Devices

Peripheral device connection

Connect peripheral devices to the monitor using headphone ports.

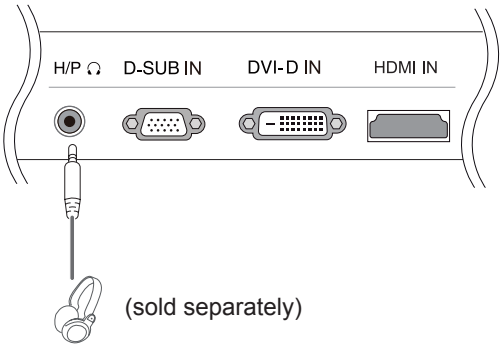

NOTE

- Peripheral devices are sold separately.
- Cables with angled plugs may have clearance issues, use straight plugs when possible.

Angle Type

Straight Type

NOTE

- Headphones or speakers may not work normally, depending on the server PC settings.

Self Image Setting Function

Press the power button on the bottom panel to turn the power on. When monitor power is turned on, the "**Self Image Setting**" Function is executed automatically. (Only supported in Analog Mode)

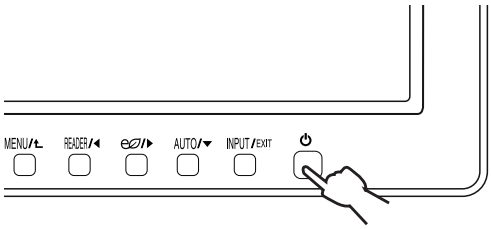

NOTE

- **"Self Image Setting" Function.**
  This function provides the user with optimal display settings.When the user connects the monitor for the first time, this function automatically adjusts the display to optimal settings for individual input signals.(Only supported in Analog Mode)
- **'AUTO' Function.**
  When you encounter problems such as blurry screen, blurred letters, screen flicker or tilted screen while using the device or after changing screen resolution, press the AUTO function button to improve resolution. (Only supported in Analog Mode)

CUSTOMIZING SETTINGS

1 Press the desired button on the bottom of the Monitor set.

2 Change the value of the menu item by pressing the buttons on the bottom of the Monitor set.
To return to the upper menu or set other menu items, use the up arrow (⮝) button.

3 Select **EXIT** to leave the OSD menu.

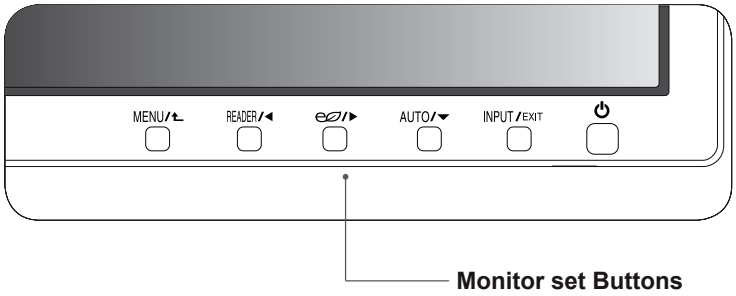

Button	Description	
MENU / ⮝	Accesses the main menus.(See p.17)	
	OSD Locked/OSD Unlocked	This function allow you to lock the current control settings, so that they cannot be inadvertently changed. Press and hold the MENU button for several seconds. Then OSD of “OSD Lock” will appear. After that, user can select lock or unlock by pressing left/right button. If user selects the “Lock” icon by pressing the “OK” button, the message “OSD Locked” will appear. Otherwise, “OSD Unlocked” will appear. After selecting the “Lock”, If you want to change to Unlock, you can push the “MENU” button for several seconds. The message “OSD Unlocked” will appear.
READER / ◀	Use this button to enter Reader Mode menu. Its function works to display screen as paper-like picture for Eye comfort.If you want to more information(See p.22).	
⊘ / ▶	Use this button to enter SMART ENERGY SAVING menu.(See p.23)	
AUTO / ▼	When adjusting your display settings, always press the AUTO button on the MONITOR SETUP OSD. (Only supported in Analog Mode)	
	The best display mode	1920 x 1080
INPUT / EXIT	You can choose the input signal. • When two input signals are connected, you can select the input signal (D-SUB/DVI/HDMI) you want. • When only one signal is connected, it is automatically detected. The default setting is D-SUB.	
	EXIT	
	EXIT the OSD(On Screen Display).	
⏻ (Power Button)	Turns the power on or off.	
	Power Indicator	The power indicator stays white if the display is running properly (On Mode). If the display is in Sleep Mode, the power indicator blinks white.

Customizing Settings

Menu Settings

1 Press **MENU** button on the bottom of the Monitor set to display the **Menu** OSD.

2 Set the options by pressing the ◄ or ► or ▼ buttons.

3 Select the "**Next Menu**" button to enter the more option settings.

4 Select **EXIT** to leave the OSD menu.
To return to the upper menu or set other menu items, use the up arrow (🡅) button.

Each option is explained below.

Menu	Analog	Digital	HDMI	Description
Brightness	●	●	●	To adjust the brightness, contrast of the screen.
Contrast	●	●	●	
Wide/Original	●	●	●	**Wide**
				Switch to full screen mode according to input image signal.
				Original
				Change the input image signal ratio to original. * This function works only if input resolution is lower than Monitor set ratio (16:9).
Reset	●	●	●	Restore all factory default settings. Press the◄ , ►buttons to reset immediately.

Menu > Next Menu		Analog	Digital	HDMI	Description
Picture	**Sharpness**	●	●	●	To adjust the clearness of the screen
	Black Level			●	To set offset level
	Overscan			●	To improve the clarity and stability of the screen
Color	**Gamma**	●	●	●	To customize the color of the screen
	Color Temp				
Display	**Horizontal**	●			To adjust the position of the screen
	Vertical				
	Clock	●			To improve the clarity and stability of the screen
	Phase				
Audio	**Volume**			●	To adjust the volume
Others	**Language**	●	●	●	To customize the screen status for a user's operating environment
	Power Indicator				
	Automatic Standby	●	●	●	

- **Analog:** D-SUB(Analog signal) input.
- **Digital:** DVI-D(Digital signal) input.
- **HDMI:** HDMI(Digital signal) input.

Picture

1 Press **MENU** button on the bottom of the Monitor set to display the **Menu** OSD.

2 Select the "**Next Menu**" button to enter the more option settings.

3 Enter to **Picture** by pressing the ▼ button.

4 Set the options by pressing the ◄ or ► or ▼ buttons.

5 Select **EXIT** to leave the OSD menu.
To return to the upper menu or set other menu items, use the up arrow (⮅) button.

Each option is explained below.

Menu > Next Menu > Picture	Description
Sharpness	To adjust the clearness of the screen.
Black Level	You can set the offset level. If you select 'High', the screen will be bright and if you select ‘Low’, the screen will be dark.(only for HDMI input) * Offset?As the criteria for video signal, it is the darkest screen the monitor can show.
Overscan	To select the range of output image for DTV timing in HDMI input.(only for HDMI input)Recommend overscan function to turn on when connect AV equipment.

Color

1 Press **MENU** button on the bottom of the Monitor set to display the **Menu** OSD.

2 Select the "**Next Menu**" button to enter the more option settings.

3 Select **Color** by pressing the ► button.

4 Enter to **Color** by pressing the ▼ button.

5 Set the options by pressing the ◄ or ► or ▼ buttons.

6 Select **EXIT** to leave the OSD menu.
To return to the upper menu or set other menu items, use the up arrow (🡅) button.

Each option is explained below.

Menu > Next Menu > Color	Description
Gamma	Set your own gamma value. : Gamma 0, Gamma 1, Gamma 2 on the monitor, high gamma values display whitish images and low gamma values display blackish images.
Color Temp	**Custom**
	• **Red:**Set your own red color levels. • **Green:** Set your own green color levels. • **Blue:**Set your own blue color levels.
	Select the screen color. **Warm:** Set the screen to warm color temperature (more red). **Medium:** Set the screen to medium color temperature. **Cool:** Set the screen to cool color temperature (more blue).

Display

1 Press **MENU** button on the bottom of the Monitor set to display the **Menu** OSD.

2 Select the "**Next Menu**" button to enter the more option settings.

3 Select **Display** by pressing the ► button.

4 Enter to **Display** by pressing the ▼ button.

5 Set the options by pressing the ◄ or ► or ▼ buttons.

6 Select **EXIT** to leave the OSD menu.
To return to the upper menu or set other menu items, use the up arrow (🡅) button.

Each option is explained below.

Menu > Next Menu > Display	Description
Horizontal	To move image left and right.
Vertical	To move image up and down.
Clock	To minimize any vertical bars or stripes visible on the screen background.The horizontal screen size will also change.
Phase	To adjust the focus of the display. This item allows you to remove any horizontal noise and clear or sharpen the image of characters.

Audio

1 Press **MENU** button on the bottom of the Monitor set to display the **Menu** OSD.

2 Select the "**Next Menu**" button to enter the more option settings.

3 Select **Audio** by pressing the ► button.

4 Enter to **Volume** by pressing the ▼ button.

5 Set the options by pressing the ◄ or ► buttons.

6 Select **EXIT** to leave the OSD menu.
To return to the upper menu or set other menu items, use the up arrow (🡅) button.

Each option is explained below.

Menu > Next Menu > Audio	Description
Volume	To adjust the Volume of headphone/earphone.(Only for HDMI input)

Others

1 Press **MENU** button on the bottom of the Monitor set to display the **Menu** OSD.

2 Select the "**Next Menu**" button to enter the more option settings.

3 Select **Others** by pressing the ► button.

4 Enter to **Others** by pressing the ▼ button.

5 Set the options by pressing the ◄ or ► or ▼ buttons.

6 Select **EXIT** to leave the OSD menu.
To return to the upper menu or set other menu items, use the up arrow (🡅) button.

Each option is explained below.

Menu > Next Menu > Others	Description
Language	To choose the language in which the control names are displayed.
Power Indicator	Use this function to set the power indicator on the bottom side of the monitor to On or Off.If you set Off, it will go off. If you set On at any time, the power indicator will automatically be turned on.
Automatic Standby	If you do not press any button on the monitor set for a certain period, the monitor set will automatically switch to standby mode.

READER Setting

1 Press **READER** button on the bottom of the Monitor set to display the **Reader Mode** OSD.

2 Set the options by pressssing the ◀ buttons.

Each option is explained below.

Reader Mode	Description
Reader 1	It is a mode that the screen is adjusted to the best for the newspaper. If you want screen more bright, you can control brightness in Menu OSD.
Reader 2	It is a mode that the screen is adjusted to the best for the cartoon. If you want screen more bright, you can control brightness in Menu OSD.
Reader Off	It is a mode that reader mode is off.

NOTE

If option of Reader Mode is Reader 1 or Reader 2, SMART ENERGY SAVING will automatically be Off.

SMART ENERGY SAVING

1 Press button on the bottom of the Monitor set to display the **SMART ENERGY SAVING** OSD.

2 Set the options by pressing the ► buttons.

Each option is explained below.

SMART ENERGY SAVING	Description
High	Enables SMART ENERGY SAVING you can save energy with this energy- high efficient function.
Low	Enables SMART ENERGY SAVING you can save energy with this energy- low efficient function.
Off	Disables SMART ENERGY SAVING.

* **SMART ENERGY SAVING:** Conserve energy by using luminance compensation algorithm.

NOTE

- Saving Data depends on the Panel. So,those values should be different from each panel and panel vendor.
- If you select the option of **SMART ENERGY SAVING** is **High** or **Low**, monitor luminance become lower or higher depend on source.

TROUBLESHOOTING

Check the following before calling for service.

No image appears	
Is the power cord of the display connected?	• Check and see if the power cord is connected properly to the power outlet.
Is the power indicator light on?	• Press the Power button.
Is the power on and the power indicator White?	• Adjust the brightness and the contrast.
Is the power indicator flickering?	• If the display is in power saving mode, try moving the mouse or pressing any key on the keyboard to bring up the screen. • Try to turn on the PC.
Do you see an "OUT OF RANGE" message on the screen?	• This message appears when the signal from the PC (video card) is out of horizontal or vertical frequency range of the display. See the 'Specifications' section of this manual and configure your display again.
Do you see a "NO SIGNAL" message on the screen?	• When the monitor is on "No-Signal" in 5 minutes, the monitor goes to DPM mode.

Do you see a "OSD LOCKED" message on the screen?	
Do you see “OSD LOCKED” when you push MENU button?	• You can secure the current control settings, so that they cannot be inadvertently changed. You can unlock the OSD controls at any time by pushing the MENU button for several seconds: the message “OSD UNLOCKED” will appear.

Display image is incorrect	
Display Position is incorrect.	• Press the **AUTO** button to automatically adjust your display image to the ideal setting.
On the screen background, vertical bars or stripes are visible.	• Press the **AUTO** button to automatically adjust your display image to the ideal setting.
Any horizontal noise appearing in any image or characters are not clearly portrayed.	• Press the **AUTO** button to automatically adjust your display image to the ideal setting. • Check **Control Panel** ► **Display** ► **Settings** and adjust the display to the recommended resolution or adjust the display image to the ideal setting. Set the color setting higher than 24 bits (true color).

CAUTION

- Check **Control Panel ► Display ► Settings** and see if the frequency or the resolution were changed. If yes, readjust the video card to the recommend resolution.
- If the recommended resolution (optimal resolution) is not selected, letters may be blurred and the screen may be dimmed, truncated or biased. Make sure to select the recommend resolution.
- The setting method can differ by computer and O/S (Operation System), and resolution mentioned above may not be supported by the video card performance. In this case, please ask to the computer or the video card manufacturer.

Display image is incorrect	
The screen color is mono or abnormal.	• Check if the signal cable is properly connected and use a screwdriver to fasten if necessary. • Make sure the video card is properly inserted in the slot. • Set the color setting higher than 24 bits (true color) at **Control Panel ► Settings**.
The screen blinks.	• Check if the screen is set to interlace mode and if yes, change it to the recommend resolution.

Do you see an "Unrecognized monitor, Plug&Play (VESA DDC) monitor found" message?	
Have you installed the display driver?	• Be sure to install the display driver from the display driver CD (or diskette) that comes with your display. Or, you can also download the driver from our web site: http://www.lg.com. • Make sure to check if the video card supports Plug&Play function.

The screen is flickering.	
Did you select the recommended resolution?	• If the selected resolution is HDMI **1080i** 60/50 Hz, the screen may be flickering. Change the resolution to the recommended resolution **1080P**.

ENGLISH

SPECIFICATIONS

22MB35PH

Display	**Screen Type**	Flat Panel Active matrix-TFT LCD Anti-Glare coating
	Pixel Pitch	0.24825(H)mm x 0.24825(V)mm
Sync Input	**Horizontal Frequency**	30 kHz to 83 kHz (Automatic)
	Vertical Frequency	56Hz to 75Hz (D-SUB,DVI-D) 56Hz to 61Hz (HDMI)
	Input Form	Separate Sync. Digital
Video Input	**Signal Input**	15 pin D-SUB Connector/DVI-D Connector(Digital) HDMI Connector
	Input Form	RGB Analog (0.7 Vp-p/ 75 ohm), Digital
Resolution	**Max**	D-SUB(Analog) : 1920 x 1080 @ 60Hz DVI/HDMI (Digital) : 1920 x 1080 @ 60 Hz
	Recommend	VESA 1920 x 1080 @ 60 Hz
Plug & Play	DDC 2B(Analog,Digital,HDMI)	
Power Consumption	On Mode : 19.6 W Typ. (Outgoing condition) * Sleep Mode ≤ 0.3 W ** Off Mode ≤ 0.3 W	
Power Input	AC 100-240 V~ 50/60 Hz 1.0 A	
Dimensions (Width x Height x Depth)	**With Stand**	509 mm x 353 mm x 224 mm
	Without Stand	509 mm x 304 mm x 144 mm
Weight	4.1 kg	
Tilt Range	-5° to 20°	
Environmental conditions	**Operating Temperature** **Operating Humidity**	10°C to 35 °C 10 % to 80 %
	Storage Temperature **Storage Humidity**	-20°C to 60 °C 5 % to 90 % non-Condensing
Stand Base	Attached ( ), Detached (O)	
Power cord	Wall-outlet type	

Product specifications shown above may be changed without prior notice due to upgrade of product functions.
The power consumption level can be different by operating condition and monitor setting.
* The On mode power consumption is measured with LGE test standard (Full White pattern , Maximum resolution).
** The monitor goes to the Sleep Mode in a couple of minutes(Max 5 minutes)

Preset Modes (Resolution)

Display Modes (Resolution)	Horizontal Frequency(kHz)	Vertical Frequency(Hz)	Polarity(H/V)	
720 x 400	31.468	70	-/+	
640 x 480	31.469	60	-/-	
640 x 480	37.500	75	-/-	
800 x 600	37.879	60	+/+	
800 x 600	46.875	75	+/+	
1024 x 768	48.363	60	-/-	
1024 x 768	60.023	75	+/+	
1152 x 864	67.500	75	+/+	
1280 x 1024	63.981	60	+/+	
1280 x 1024	79.976	75	+/+	
1680 x 1050	65.290	60	-/+	
1920 x 1080	67.500	60	+/+	Recommend Mode

HDMI Timing

Factory support mode (Preset Mode)	Horizontal Frequency(kHz)	Vertical Frequency(Hz)	HDMI
480P	31.50	60	O
576P	31.25	50	O
720P	37.50	50	O
720P	45.00	60	O
1080P	56.25	50	O
1080P	67.50	60	O Recommend Mode

Indicator

Mode	LED Color
On Mode	White(only 15 seconds)
Sleep Mode	Blinking White
Off Mode	Off

PROPER POSTURE

Proper posture for using the Monitor set.

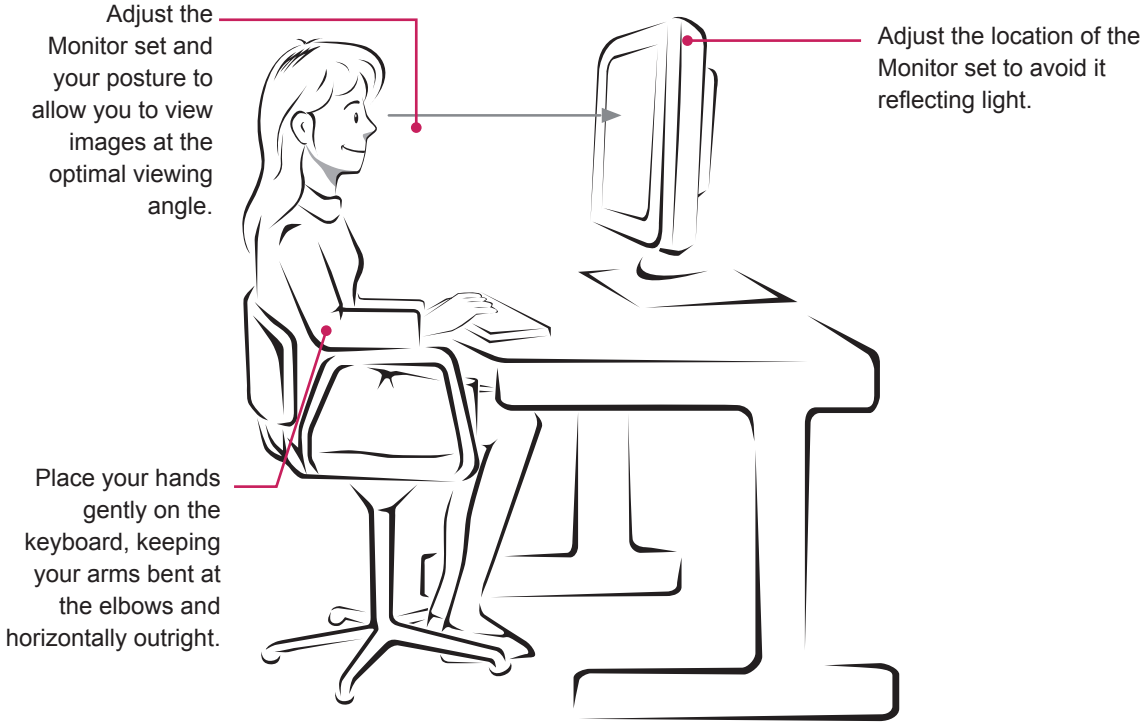

Make sure to read the Safety Precautions before using the product.
Keep the Owner's Manual (CD) in an accessible place for future reference.
The model and serial number of the SET is located on the back and one side of the SET.
Record it below should you ever need service.

MODEL _____

SERIAL _____