# Printing Specification

## 1. Specification

| | | |
|---|---|---|
| Models | 1. Model Name: | QNED |
| | 2. Suffix: | AU |
| | 3. Part No: | MFL72097703 |
| | 4. REV | REV00 |
| | 5. Number of pages | 16 |
| | 6. Folded/Unfolded | 3 Folded |
| SIZE | 7. Trim size (W x H)_Unfolded (mm) | 296 x 420(+/-5) |
| | 8. Trim size (W x H)_folded (mm) | 148 x 105(+/-5) |
| | 9. Bindery | - |
| COVER | 10. Color (Cover) | - |
| | 11. Paper (Cover) | - |
| | 12. Weight (cover) (g/㎡) | - |
| INNER | 13. Color (inner) | 4(CMYK) |
| | 14. Paper (inner) | Wood free |
| | 15. Weight (inner) (g/㎡) | 70(+/-10) |
| | 16. Coating | No |
| | 17. Thomson | No |
| | 18. Sub-material | No |
| | 19. Languages | ENG |

## 1.1 Folding / Cover

**Folded Step**

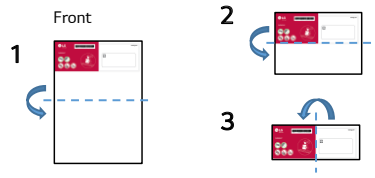


**Folded**

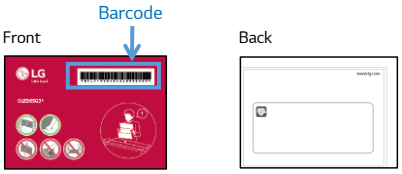


## 2. Origin Notification

Changes the Country name.

Printed in Korea
Copyright © 2021 LG Electronics Inc. All Rights Reserved.
Printed in [Country Name in English]

Imprimé en Corée
Copyright © 2021 LG Electronics inc. Tous droits réservés.
www.lg.com
Imprimé en(au) [Country Name in French]

[ blank ]

[ PRODUZIDO NO POLO INDUSTRIAL DE MANAUS
CONHEÇA A AMAZÔNIA
LG Electronics do Brasil Ltda.
CNPJ: 01.166.372/0008-21
Rua Javari, nº 1004, Distrito Industrial, CEP 69075-110, Manaus/AM, Indústria Brasileira ]

| [Country Name] (ENG/FRE) | |
|---|---|
| LGERS / LGEMX : | Printed in Mexico<br>Imprimé au Mexique |
| LGEKR : | Printed in Korea<br>Imprimé en Corée |
| LGEMA : | Printed in Poland<br>Imprimé en Pologne |
| LGEND : | Printed in China<br>Imprimé en Chine |
| LGEIN : | Printed in Indonesia<br>Imprimé en Indonésie |
| Brazil : | Printed in [Each Country name]<br>[Image] (LGEAZ production only) |
| Others : | Each Country name. |

**NOTE**

**[Restriction of Hazardous Substances ]**

Hazardous substances on this product should be satisfied by substance regulation of Level A-I, A-II, SVHC according to LG(52)B—5011 standard.
Especially, Part should be followed and controlled the following specification.

(1) Hazardous substances test report should be submitted when part certification test and first mass production.

(2) Especially, Don't use or contain lead (Pb) and cadmium (Cd) in ink.

**INK REQUIREMENT FOR EU**

(1) The amount of MOAH/MOSH must be less than 0.1% of the weight of the INK used.

* MOAH(Mineral Oil Aromatic Hydrocarbons) : Consisting of 1 to 7 aromatic cycles
* MOSH(Mineral Oil Saturated Hydrocarbons) : Consisting of 16 to 35 carbon atoms

(2) From 01 January 2025 : Ban on the use of MOAH in INK up to a limit of one part per million(1ppm) for compounds of 3 to 7 aromatic cycles

## 3. History

| Rev. Number | Date | Description | ECO Number | Owner | Aditya K. |
|---|---|---|---|---|---|
| REV07 | | | | | |
| REV06 | | | | | |
| REV05 | | | | | |
| REV04 | | | | | |
| REV00 | 12/19/2023 | - | - | Checked | Nitin H |
| | | | | Approved | Santosh C. |

LG

*MFL72097703 2404REV00*

# Quick Start Guide

43QNED80*
43QNED82*
50QNED80*
50QNED82*
50QNED85*
55QNED80*
55QNED82*
55QNED85*
55QNED88*
65QNED80*
65QNED82*
65QNED85*
75QNED80*
75QNED82*
75QNED85*
86QNED80*
86QNED85*













www.lg.com
Printed in India

Images and Accessory parts shown in manual may vary depending on model.

**43/50/55"**



ⓐ x 4
(M4 x L16)

**65"**



ⓐ x 4
(M4 x L16)

**75/86"**

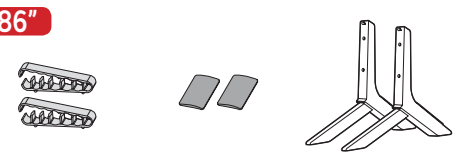

ⓑ x 4
(M4 x L20)

## Unpacking

Check your product box for the following items. If there are any missing accessories, contact the local dealer where you purchased your product.
The illustrations in this manual may differ from the actual product and item.

**43/50/55"**

1

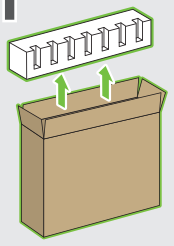

2

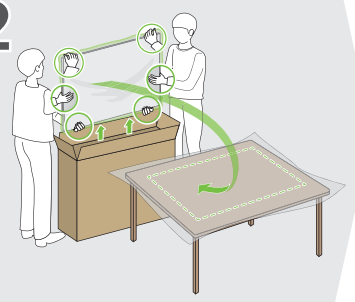

3

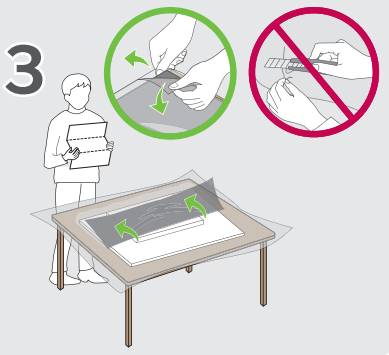

**65/75"**

1

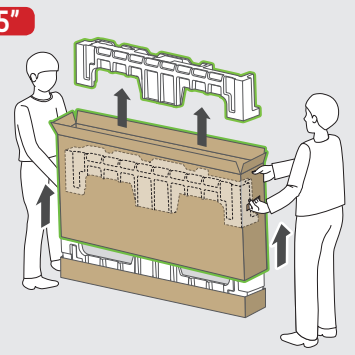

**86"**

1

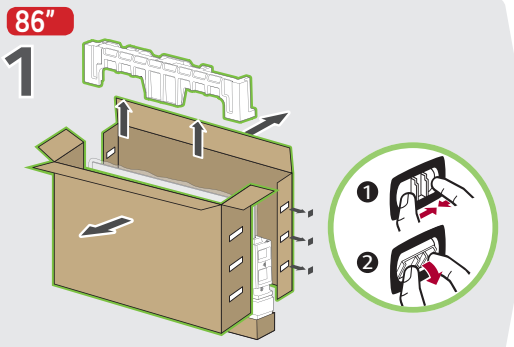

**65/75/86"**

2

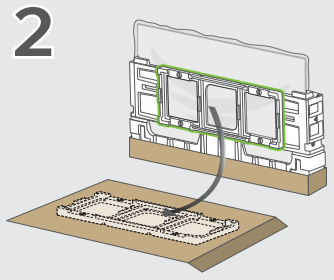

3

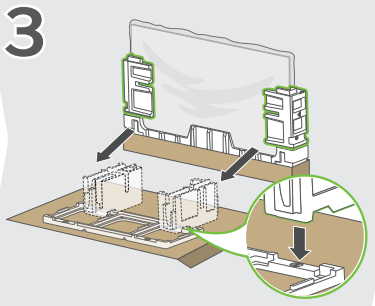

4

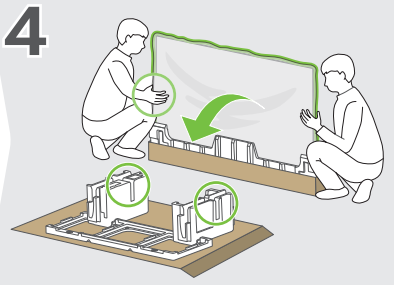

5

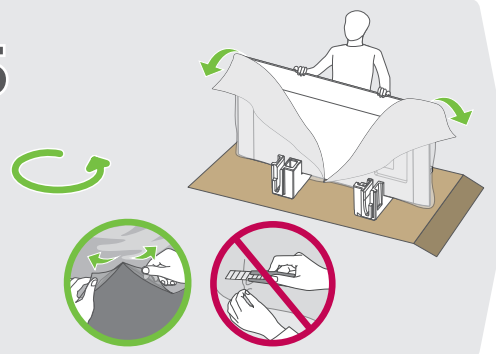

6

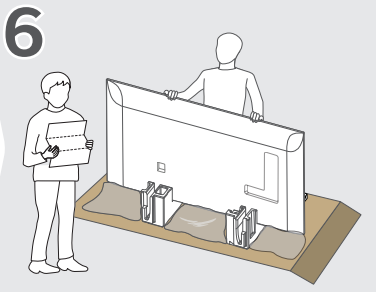

⚠CAUTION
Image shown may differ from your TV
When attaching the stand to the TV set, place the screen facing down on a cushioned table or flat surface to protect the screen from scratches.

**43/50/55"**

1

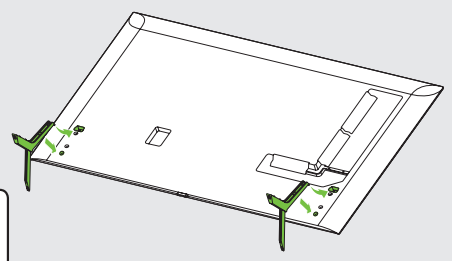

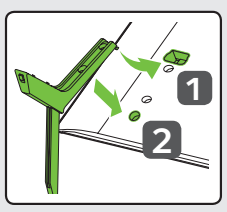

**65/75/86"**

1

A



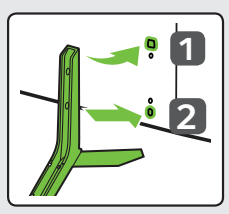

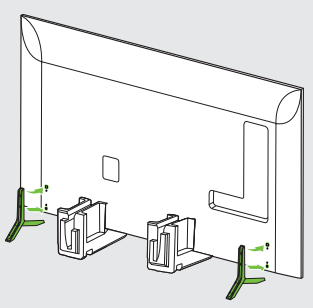

B

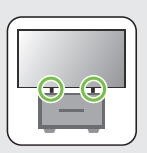

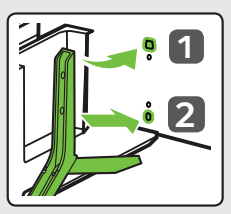

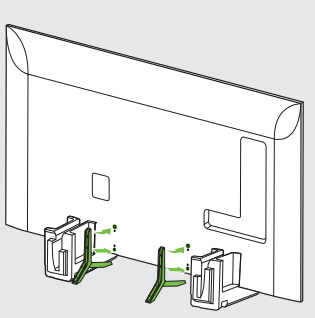

**43/50/55"**

2

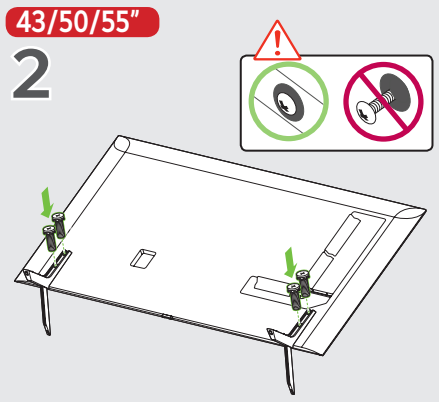

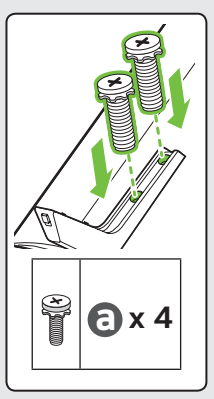

**65/75/86"**

2

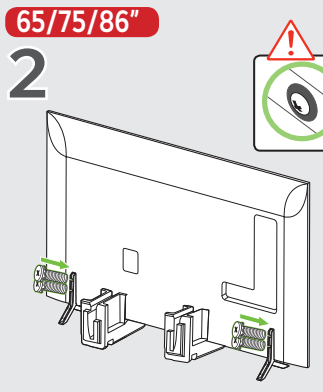

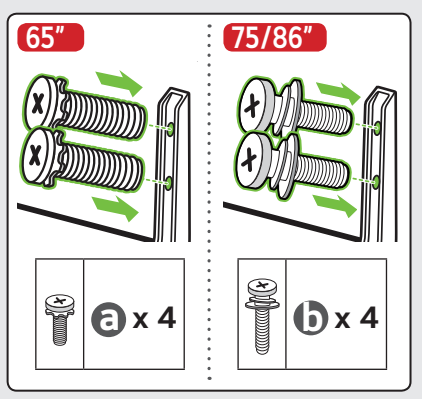


**43/50/55"**

3

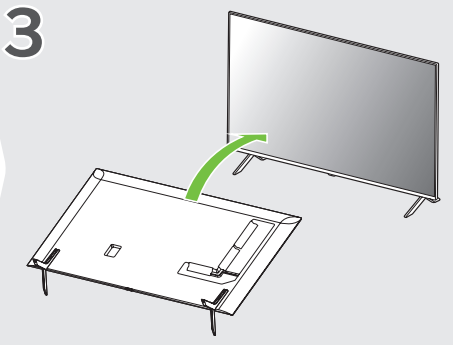

**65/75/86"**

3

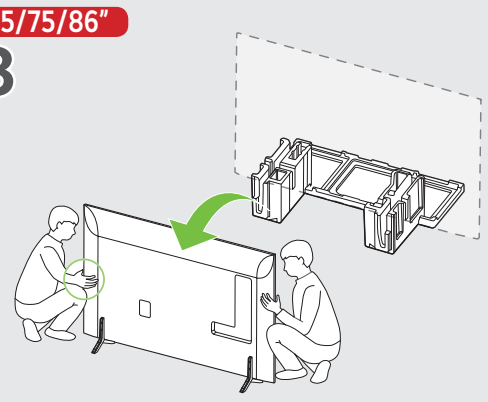

**43/50/55/65/75/86"**

4

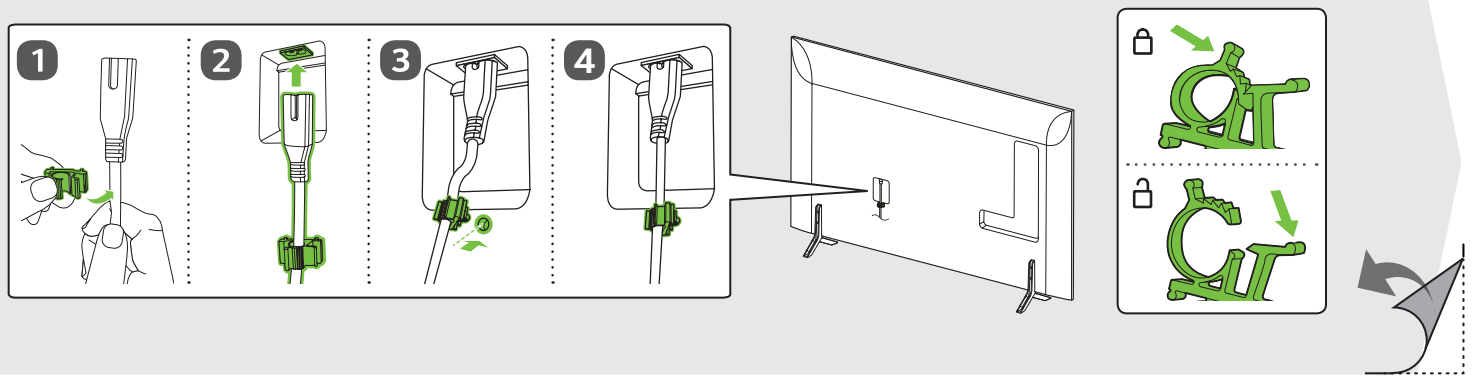

## 5

43/50/55"

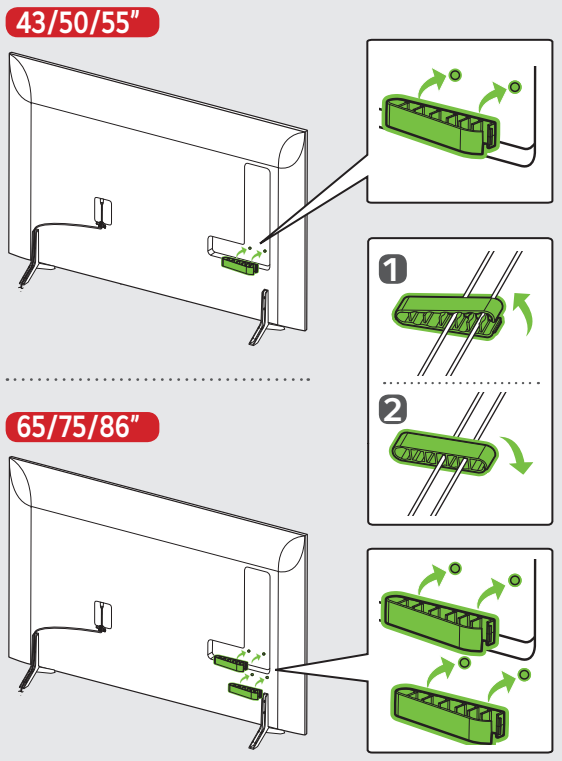

65/75/86"



## 6

43/50/55/65"

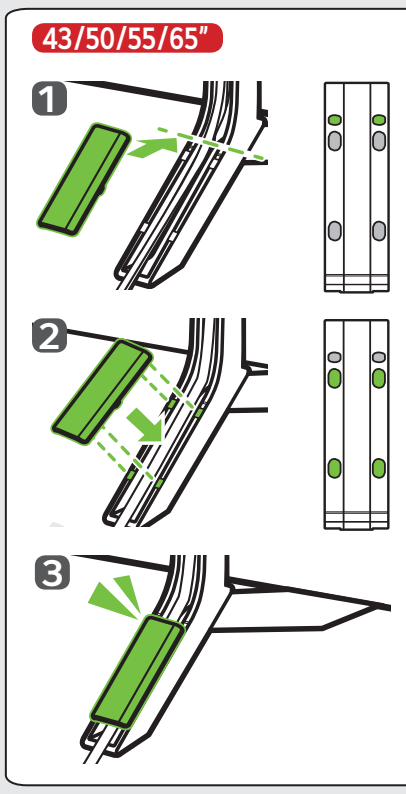

75/86"

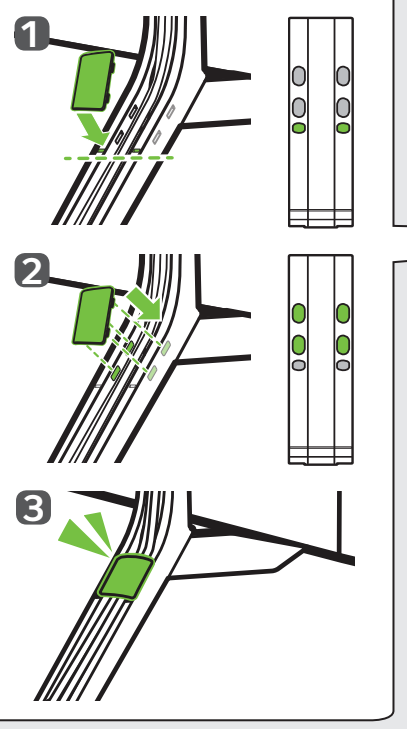

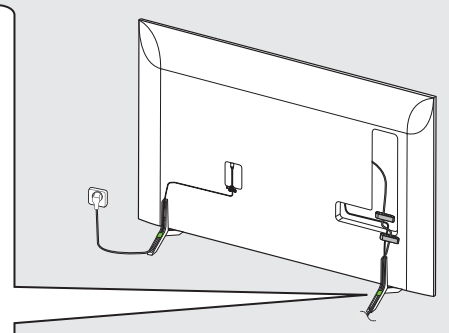

43/50/55/65/75/86"

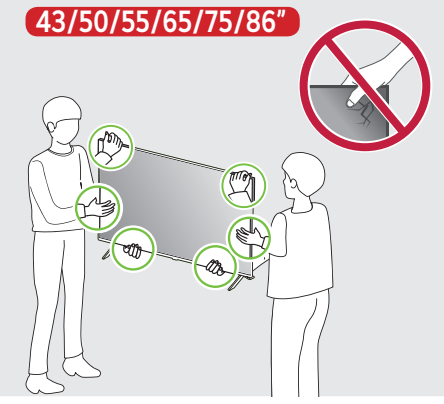

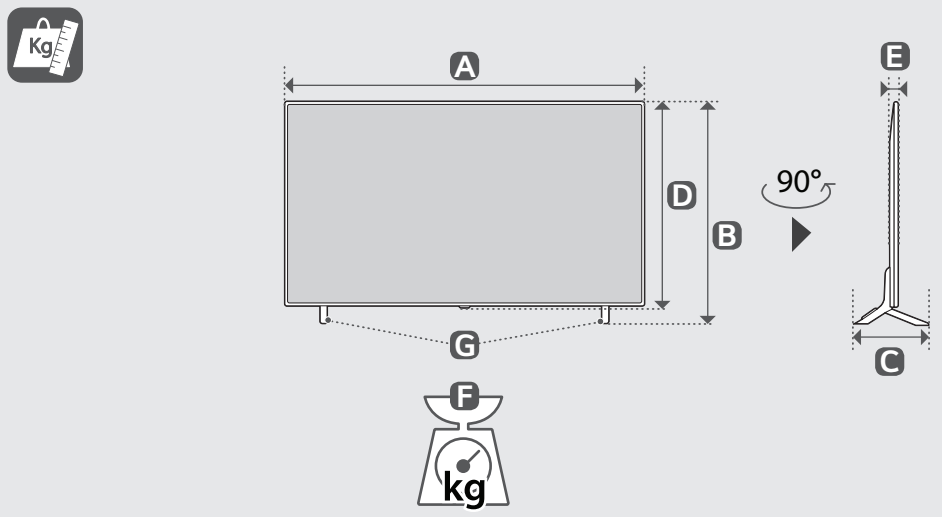


**mm** (inches)
**kg** (lbs)

| | A | B | C | D | E | F | F-G | |
|---|---|---|---|---|---|---|---|---|
| 43QNED80*<br>43QNED82* | 968 mm<br>(38.1) inches | 635 mm<br>(25.0) inches | 257 mm<br>(10.1) inches | 565 mm<br>(22.2) inches | 29.7 mm<br>(1.1) inches | 9.7 kg<br>(21.3) lbs | 9.3 kg<br>(20.5) lbs | 120 W |
| 50QNED80*<br>50QNED82* | 1123 mm<br>(44.2) inches | 720 mm<br>(28.3) inches | 257 mm<br>(10.1) inches | 652 mm<br>(25.6) inches | 29.7 mm<br>(1.1) inches | 13.4 kg<br>(29.5) lbs | 13.0 kg<br>(28.6) lbs | 125 W |
| 50QNED85* | | | | | | | | 135 W |
| 55QNED80*<br>55QNED82* | 1236 mm<br>(48.6) inches | 783 mm<br>(30.8) inches | 257 mm<br>(10.1) inches | 716 mm<br>(28.1) inches | 29.7 mm<br>(1.1) inches | 15.3 kg<br>(33.7) lbs | 14.9 kg<br>(32.8) lbs | 150 W |
| 55QNED85*<br>55QNED88* | | | | | | | | 160 W |
| 65QNED80*<br>65QNED82* | 1456 mm<br>(57.3) inches | 904 mm<br>(35.5) inches | 295 mm<br>(11.6) inches | 840 mm<br>(33.0) inches | 29.7 mm<br>(1.1) inches | 22.9 kg<br>(50.4) lbs | 22.5 kg<br>(49.6) lbs | 185 W |
| 65QNED85* | | | | | | | | 195 W |
| 75QNED80*<br>75QNED82* | 1677 mm<br>(66.0) inches | 1032 mm<br>(40.6) inches | 359 mm<br>(14.1) inches | 965 mm<br>(37.9) inches | 30.9 mm<br>(1.2) inches | 34.0 kg<br>(74.9) lbs | 33.0 kg<br>(72.7) lbs | 225 W |
| 75QNED85* | | | | | | | | 245 W |
| 86QNED80* | 1928 mm<br>(75.9) inches | 1175 mm<br>(46.2) inches | 359 mm<br>(14.1) inches | 1108 mm<br>(43.6) inches | 30.9 mm<br>(1.2) inches | 51.0 kg<br>(112.4) lbs | 50.0 kg<br>(110.2) lbs | 280 W |
| 86QNED85* | | | | | | | | 300 W |

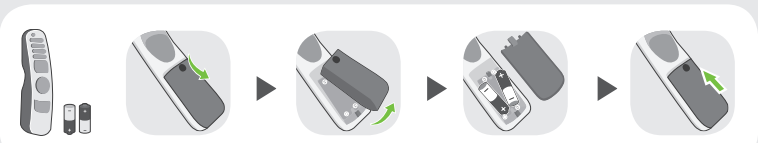

OPTICAL DIGITAL AUDIO OUT

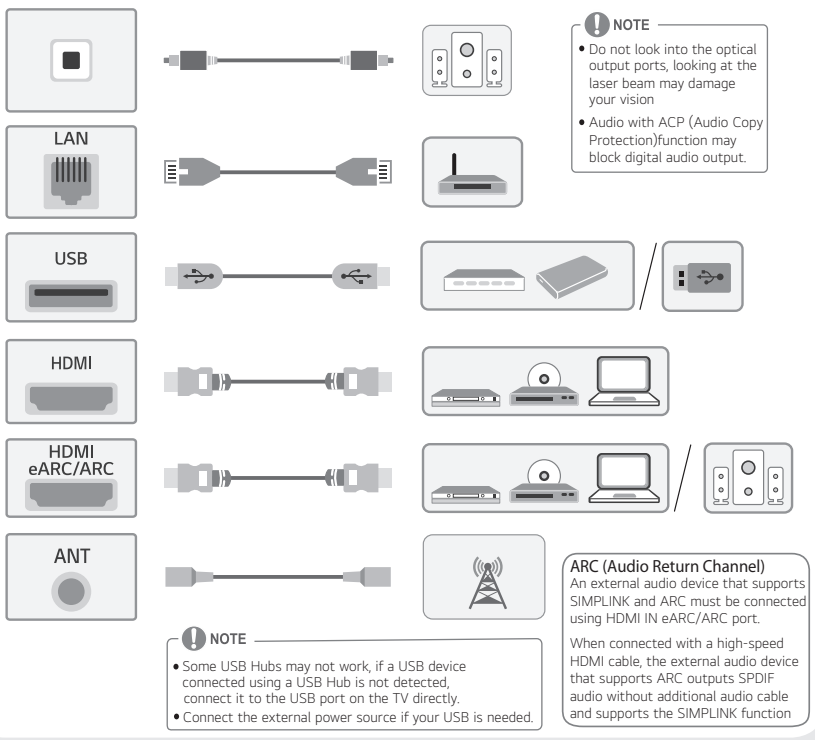


NOTE
- Do not look into the optical output ports, looking at the laser beam may damage your vision
- Audio with ACP (Audio Copy Protection)function may block digital audio output.

NOTE
- Some USB Hubs may not work, if a USB device connected using a USB Hub is not detected, connect it to the USB port on the TV directly.
- Connect the external power source if your USB is needed.

ARC (Audio Return Channel)
An external audio device that supports SIMPLINK and ARC must be connected using HDMI IN eARC/ARC port.

When connected with a high-speed HDMI cable, the external audio device that supports ARC outputs SPDIF audio without additional audio cable and supports the SIMPLINK function

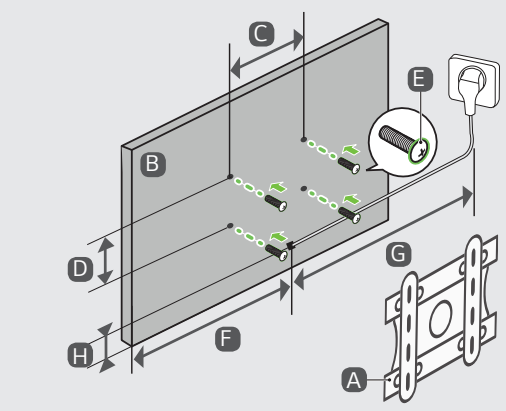


**mm** (inches)

| A | B | C x D | E | F | G | H |
|---|---|---|---|---|---|---|
| Wallmount Bracket | 43QNED80*<br>43QNED82* | 200 x 200 mm<br>(7.8 x 7.8) inches | M6 | 287 mm<br>(11.2) inches | ≧ 1.5 m<br>(59.0) inches | 190 mm<br>(7.4) inches |
| | 50QNED80*<br>50QNED82*<br>50QNED85* | | | 364 mm<br>(14.3) inches | | 221 mm<br>(8.7) inches |
| | 55QNED80*<br>55QNED82*<br>55QNED85*<br>55QNED88* | 300 x 300 mm<br>(11.8 x 11.8) inches | M6 | 371 mm<br>(14.6) inches | | 277 mm<br>(10.9) inches |
| | 65QNED80*<br>65QNED82*<br>65QNED85* | 300 x 300 mm<br>(11.8 x 11.8) inches | M6 | 481 mm<br>(18.9) inches | | 295 mm<br>(11.6) inches |
| | 75QNED80*<br>75QNED82*<br>75QNED85* | 400 x 300 mm<br>(15.7 x 11.8) inches | M6 | 532 mm<br>(20.9) inches | | 341 mm<br>(13.4) inches |
| | 86QNED80*<br>86QNED85* | 600 x 400 mm<br>(23.6 x 15.7) inches | M8 | 573 mm<br>(22.5) inches | | 336 mm<br>(13.2) inches |

