LG
Life's Good

Owner's Manual

Rotating Ceiling Mount Kit

After reading the manual, please keep it handy for future reference.

ACC-CR-EH5C

www.lg.com
P/No: MFL69681703 (1609-REV00)
Printed in Korea

SAFETY PRECAUTIONS

- If you are a professional installer, please read this manual carefully before installing the product.
- If you are a professional installer, please hand this manual to the user after installation. Please ensure that the user also reads the manual carefully and retains it for future reference.

After reading the installation manual, please keep it nearby for future reference.

Precautions When Installing the Product

⚠ WARNING

- The product should be installed by a professional installer specified by the retail store.
  - Product installation by a non-professional installer is very dangerous and may cause personal injury.
- The product should be installed where its weight can be fully supported.
  - If the product is installed on a weak surface, the product may fall, causing injury.
- When moving or replacing the product after installation, contact a professional installer specified by the retail store.
  - Installation or movement of the product must be carried out by a skilled professional. If an unqualified person moves or installs the product, it may cause safety risks.
- Do not hang on this product or strike it in any way.
  - The product may fall and cause injury.
- Do not grab the product or expose it to impact while in operation.
  - This may damage or break the motor.

⚠ CAUTION

- Follow the instructions in the installation manual to properly install this product.
  - Failure to follow the instructions in the installation manual could lead to improper installation and result in serious injury or product damage.
- Four or more people are required to install or adjust the height of the product.
  - If you try to install or move the product alone, it may fall, causing injury or damage to the product.
- Before installation, confirm that the ceiling is made of material that is strong enough to hold the product, and use the anchors and screws provided.
  - If you use anchors and screws that are not specified by the manufacturer, they may not hold the weight of the product, causing safety issues.
- When drilling holes into the ceiling, make sure you use a drill and drill bit with the specified diameter. Ensure that you also follow the instructions regarding the depth of the holes.
  - Otherwise, the product may be installed incorrectly and cause safety issues.
- Do not clean the product with a wet towel, and do not place a heater or humidifier beneath it.
  - Moisture permeating into the product, including from steam and heat, may result in a fire, electric shock or damage to the product.
- Keep this product away from sprinklers, sensors, high-tension wires and power sources. Do not install it in a location where vibrations or impacts are likely to occur.

- Disconnect the plug from the outlet before installation.
  - Otherwise, it may cause an electric shock or fire.
- Wear working gloves when installing the product. Do not use bare hands.
  - Otherwise, it may cause personal injury.
- Be sure to use the cable gender provided. Otherwise, it may cause damage to the connector from friction between the product and the ceiling. (May differ depending on the model.)
- When seeking repairs, remove the product from the area it is installed so that parts may be replaced.
  - Parts cannot be replaced when product is installed on the ceiling.

Precautions for the AC Adapter and Power

⚠ WARNING

- If water or any foreign substance enters the product (TV, device, power cord or AC adapter), disconnect the power cord immediately and contact the service center.
  - Otherwise, the damage to the product may cause a fire or electric shock.
- Always connect the power cord to a grounded outlet.
  - Failure to do so may result in electric shock or personal injury.
- Do not touch the power cord or the signal cable in the event of thunder and lightning.
  - There is risk of electric shock.
- Do not touch the power plug or AC adapter with wet hands. If the pins of the plug are wet or dusty, wipe or dry them thoroughly before use.
  - Failure to do so may cause electric shock or fire.
- Insert the power plug securely so that it does not come loose. Do not use the product if the power outlet is loose.
  - A bad connection may cause a fire or electric shock.
- Make sure the power cord is fully inserted into the AC adapter.
  - If loose, the poor connection may cause a fire or electric shock.
- Do not insert a conductor such as a chopstick into the other side of the cord while the power cord is inserted into the wall outlet. Also, avoid touching the power plug immediately after pulling it out of the wall outlet.
  - This may cause electric shock.
- Be sure to use power cords and AC adapters provided or approved by LG Electronics, Inc.
  - The use of non-approved products may cause fire or electric shock.
- Use the product at the rated voltage only.
  - Failure to do so may result in damage to the product or electric shock.
- Do not use a multi-tap outlet shared with many devices. Use a dedicated multi-tap outlet with a ground terminal.
  - Otherwise, this may result in fire due to excessive heat.
- Disconnect the power cable when the product will not be used for a long period of time.
  - Dust may accumulate, resulting in electrical short circuits, electric shock or fire due to overheating, combustion or insulation degradation.

- When unplugging the power cord, always pull it by the plug. Do not bend the power cord with excessive force.
  - A damaged cable may result in electric shock or fire.
- Be careful not to step on or place heavy objects (electronic appliances, clothing, etc.) on the power cord or AC adapter. Be careful not to damage the power cord or AC adapter with sharp objects.
  - Damaged power cords may cause a fire or electric shock.
- Never disassemble, repair or modify the power cord or AC adapter.
  - This may cause a fire or electric shock.
- To turn off the main power, remove the power cord, which should be positioned so it is easy to access for operation.

⚠ CAUTION

- Do not remove the power cord when the product is in use.
  - Otherwise, the product may be damaged due to the sudden loss of power.
- Be sure to keep the outlet, AC adapter and pins of the power plug clean from dust, etc.
  - Failure to do so may cause fire.
- Do not turn the product on or off by plugging in or unplugging the power plug from the power outlet. (Do not use the power plug as a switch.)
  - This may cause an electric shock or product malfunction.
- Keep the power cord away from any heating devices.
  - The cord coating may melt and cause fire or electric shock.

Precautions When Using the Remote Control

⚠ CAUTION

- Remove any obstacles.
- The remote control may not function properly in sunlight or under a strong lamp. Move the product if it is being used in these conditions.
- Only use the specified type of battery. Do not insert batteries that are not rechargeable into the charger.
  - Burst or leaking batteries may cause fire or electric shock.
- Avoid locations near heaters or locations with high humidity.
- Do not expose the batteries to excessive heat. Keep them away from direct sunlight, fireplaces, electric heaters, etc.

BEFORE INSTALLATION

- Do not use this product for purposes other than to attach the set to the ceiling.
- Do not install or use the rotating ceiling mount in a careless manner. Failure to do so could cause it damage or lead to safety hazards.
- If there are any aspects of the installation manual you do not understand after reading, refrain from installing the product and contact the service center.
  If there are still aspects of installation you do not understand after inquiry, contact a professional installer to install the product.
- An individual with experience in mechanical and architectural fields may not have any difficulty understanding this installation manual or installing the product, even if they are not professional installers.
- It will be most convenient for you to install the rotating ceiling mount based on the instructions specified in the installation manual.
- Only install on horizontal ceilings.
  Do not install on slanted or curved ceilings.
  LG Electronics is not liable for problems that occur as a result of installing the product on a slanted or curved ceiling.
- Check that the accessories provided with the product are all included before installing. LG Electronics is not liable for any damage or loss of the accessories after the package has been opened.
- Make sure that parts are kept out of reach of children to prevent accidents, such as choking due to swallowing.
- Make sure that the screws are tight.
  Applying excessive force to screws may cause damage to the ceiling, affect product performance, or cause product damage.
- Only use the designated set for installation.
  - Failure to do so may break the product or cause an accident of some kind.
- In order to prevent any accidents, take caution when handling tools during the installation.
- Install in a location that is out of reach.
- This product includes a motor and gears. Forcing the product to stop during rotation can cause it damage. The warranty will no longer be valid in such circumstances.

Tools for Installation

Philips screwdriver (manual or motorized), 8 mm spanner, level meter, drill, Ø 8-mm drill bit for concrete



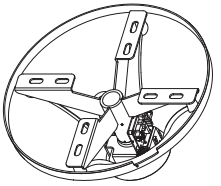

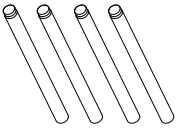



(M3 x L5.5)

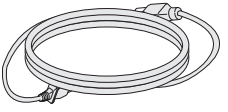

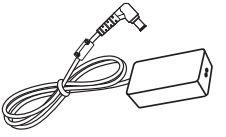





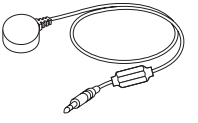

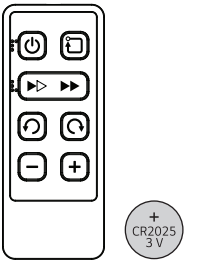

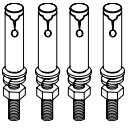

⚠ CAUTION

- When installing or adjusting the height of this product, two or more people are required. If you try to install or move the product alone, it may fall, causing injury or damage to the product.

1 Open the product box and remove the packaging materials and the T-con box in the order they appear.

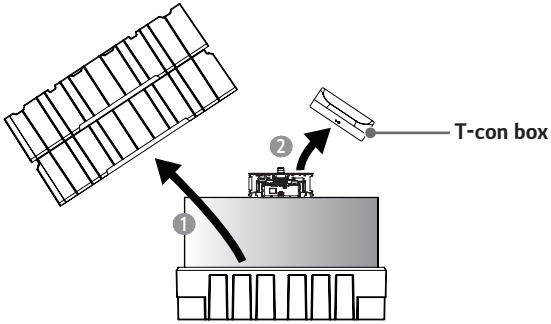

2 Separate the cover and the ceiling mount.

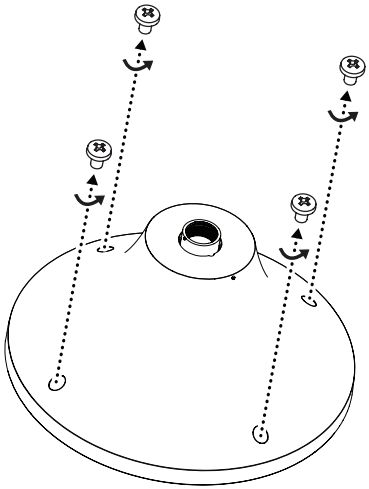

3 After connecting the pipe to the set, assemble the IR cable-linked cover and ceiling mount in order. The number of pipes connected is optional.

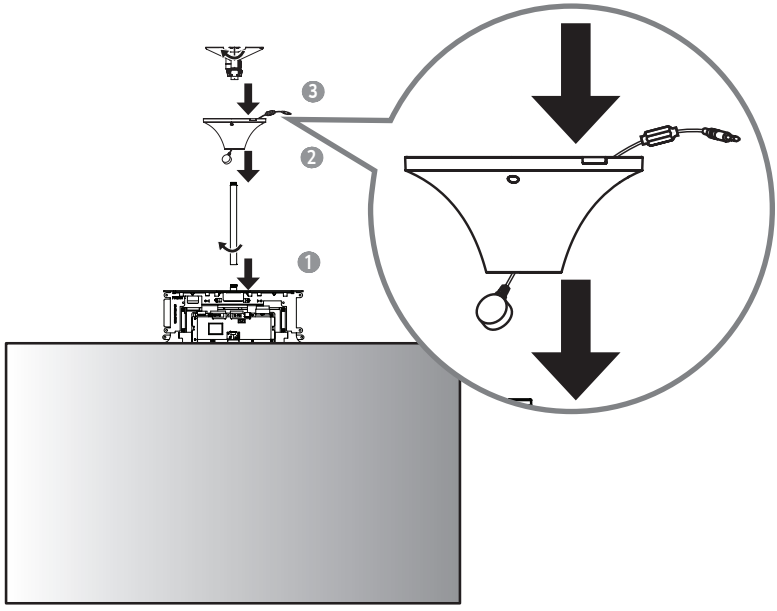

NOTE

- Prior to assembling the cover, first insert the IR cable receptor through the cover from the bottom, then temporarily attach it to the cover using the magnetic tape provided.

4 Fasten a screw (M3 x L5.5) in each screw hole between the pipes to fix them together.

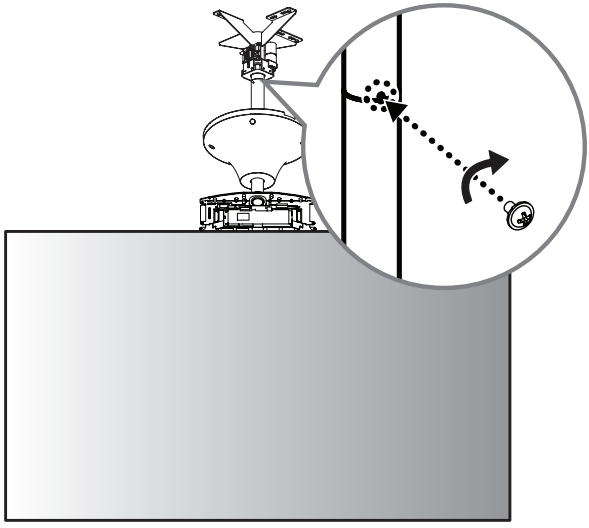

NOTE

- Line up the indicated dot on one pipe (A) with the pipe hole (B) on the other pipe to more easily connect the two pipes.

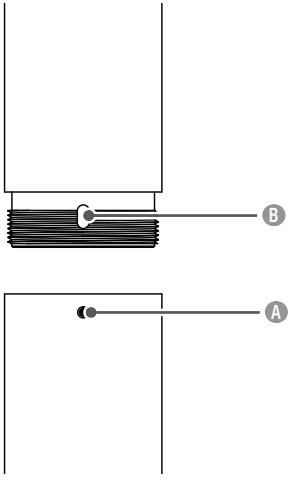

5 Fold the connectors on the opposite side of the 16/22 pin cables to make them parallel to the cable.

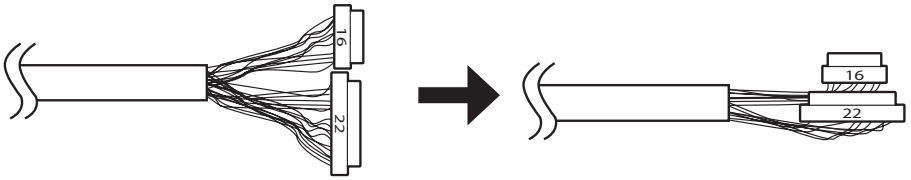

6 Insert the connectors of the 16/22 pin cables into the tubes.

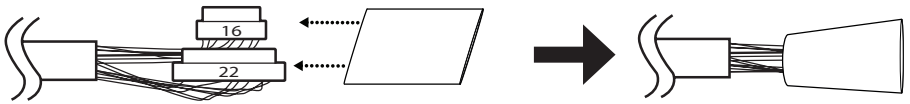

7 Insert the arranged 16/22 pin cables and HDMI cables, and reassemble the set.

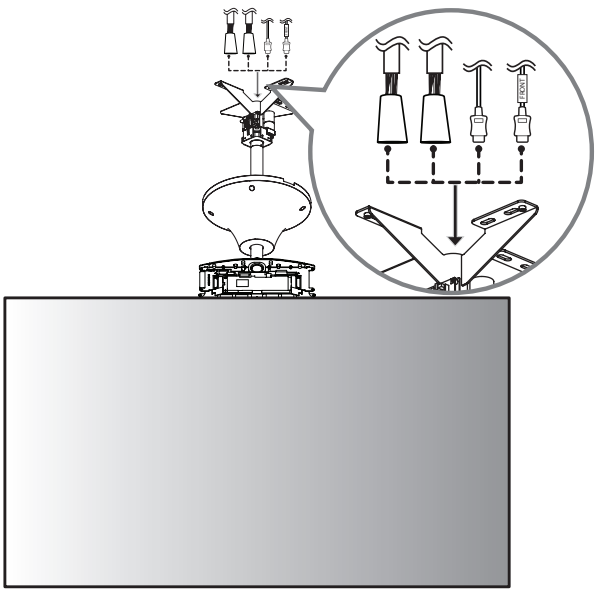

8 Connect the HDMI cable with the label marked 'FRONT' to the front side. Insert the 16/22 pin cable with the red mark into the cable holder and attach it using a screw (M3 x L4.5).

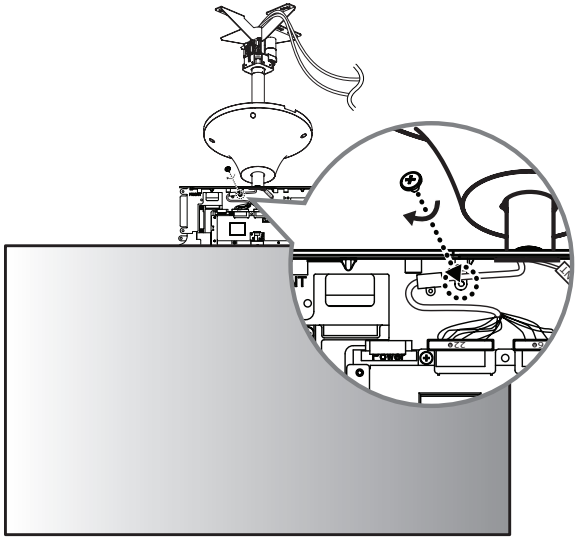

9 Connect the HDMI cable without the label marked 'FRONT' to the rear side. Insert the 16/22 pin cable without the red mark into the cable holder and attach it using a screw (M3 x L4.5).

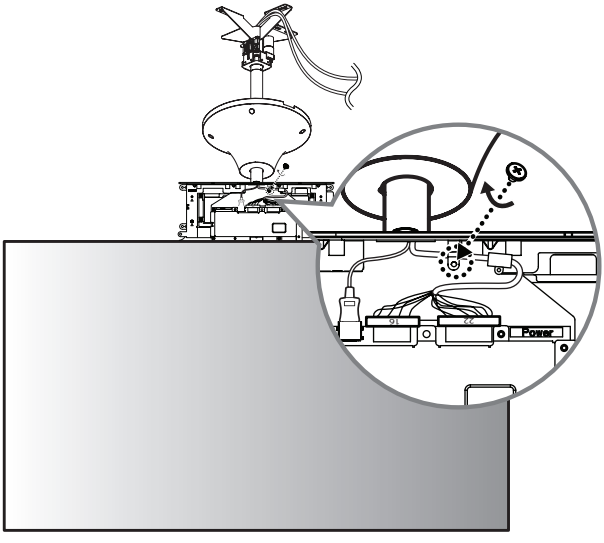

10 Cover the FRONT side with the side of the T-con box cover that has the IR receiver and attach it using four screws (Ø3 x L6) on the opposite side.

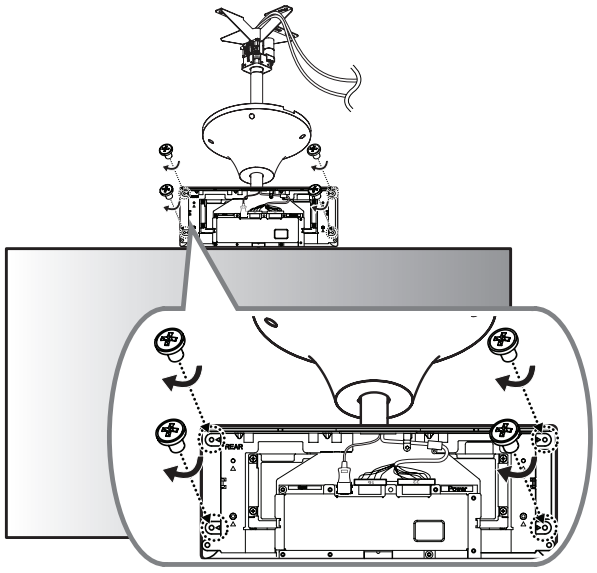

11 Cover the REAR side with the other T-con box cover and attach it using two screws (Ø3 x L10).

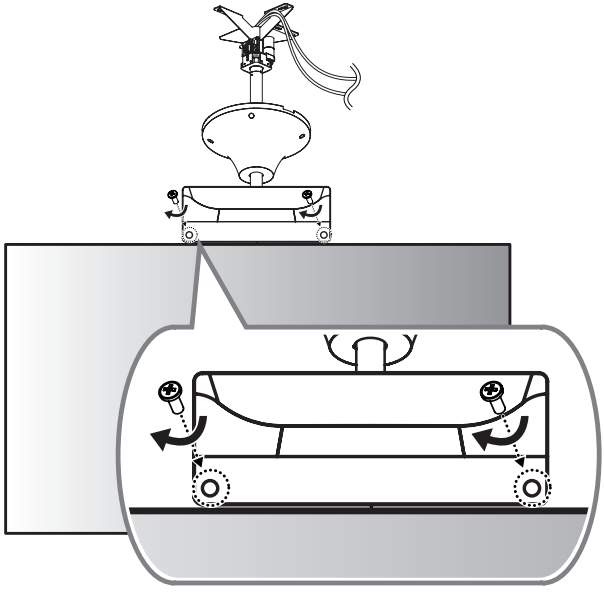

12 Fasten six screws (M4 x L10) to the bottom part of the T-con cover.

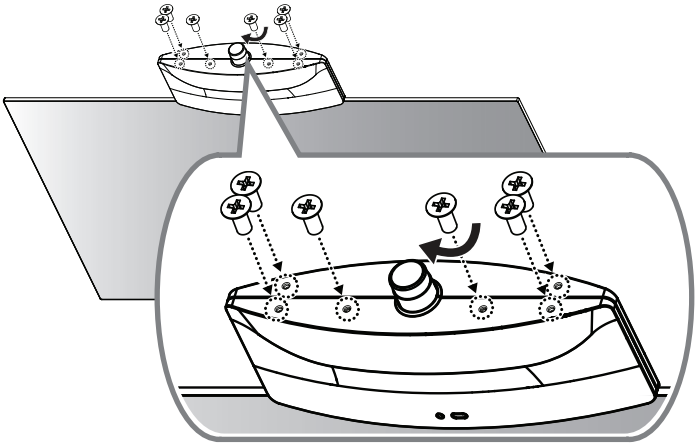

13 Prior to fastening the cover, connect the adapter and IR cable to the rotating ceiling mount board.

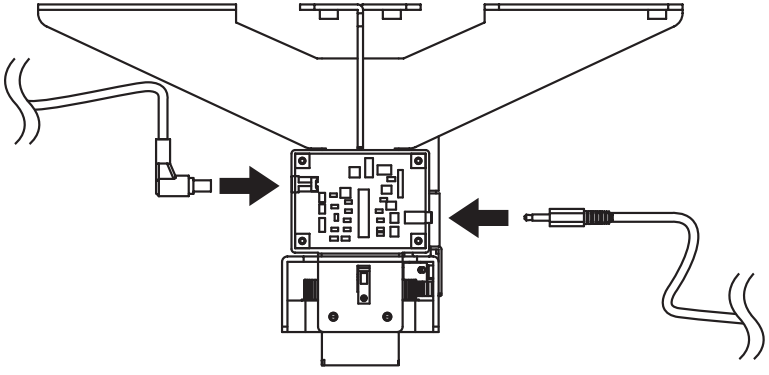

14 Install the device on the ceiling using four anchor bolts.

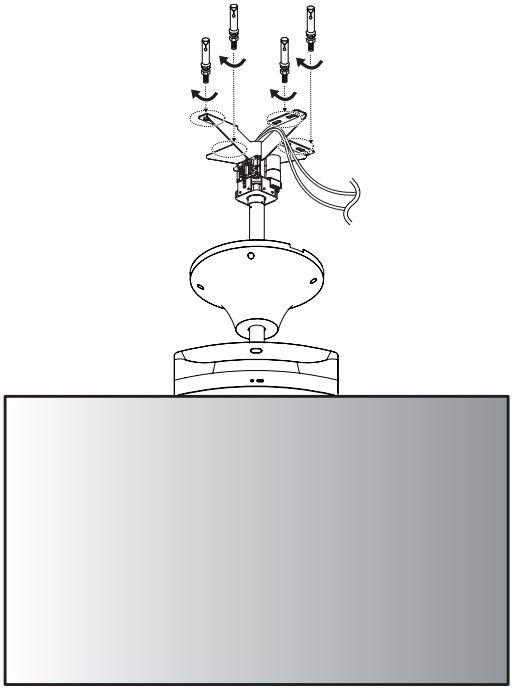

FIXING THE ANCHOR SCREWS

- Check the ceiling material and the thickness of the finish material. The anchor screws can only be used if the ceiling is made of concrete. Do not mount the device on ceilings made of plaster board or medium-density fiberboard (MDF).

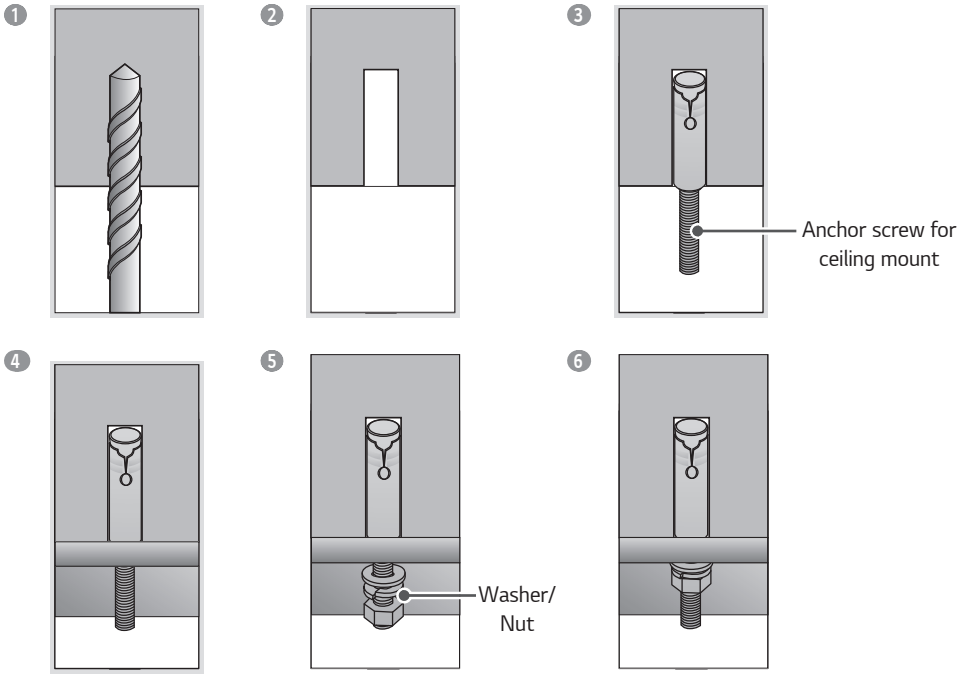

1. Drill a hole 45 mm–55 mm deep using a 14.5-mm drill bit at the position you want to install your anchor.
2. Clean out the drilled hole.
3. Insert an anchor screw into the hole.
4. Place the ceiling mount close to the ceiling so it matches the position of the screws.
5. Fasten the washers and nuts in order. Tighten the screw using a recommended torque of 45 kgf/cm or more.
6. Tighten the washers and nuts until they are completely fastened.

15 Fix the cover in place using four screws (M4 x L6). Detach the temporarily connected IR cable receptor from the cover, then use leftover magnetic tape to attach the receptor to the desired location.

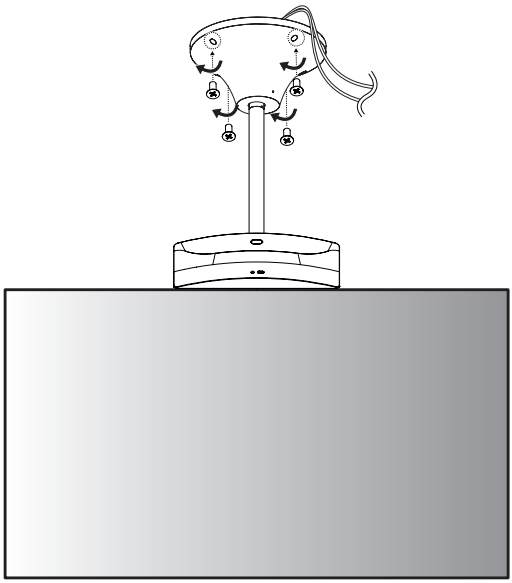

16 Connect the cables to the Signage box. Here, the HDMI cable with the FRONT label is attached to the top, and the HDMI cable without the FRONT label is attached to the bottom. The 16/22 pin cable with the red mark must be connected to the upper part.

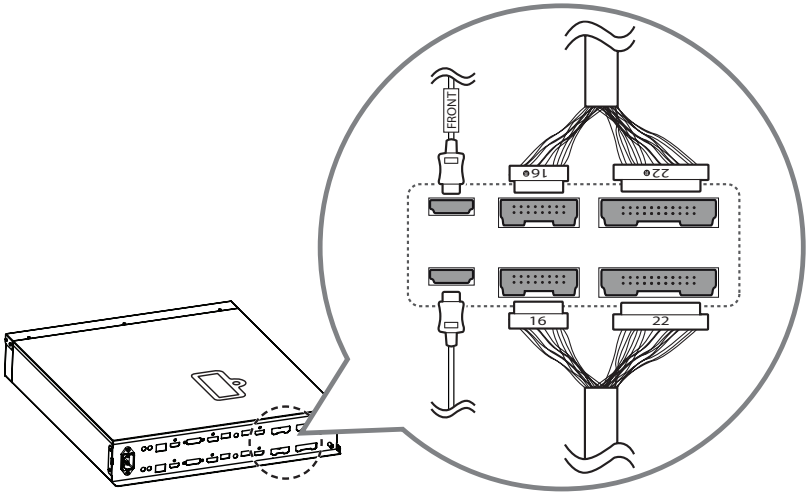

17 Attach the 16/22 pin cables using two screws (M3 x L4.5).

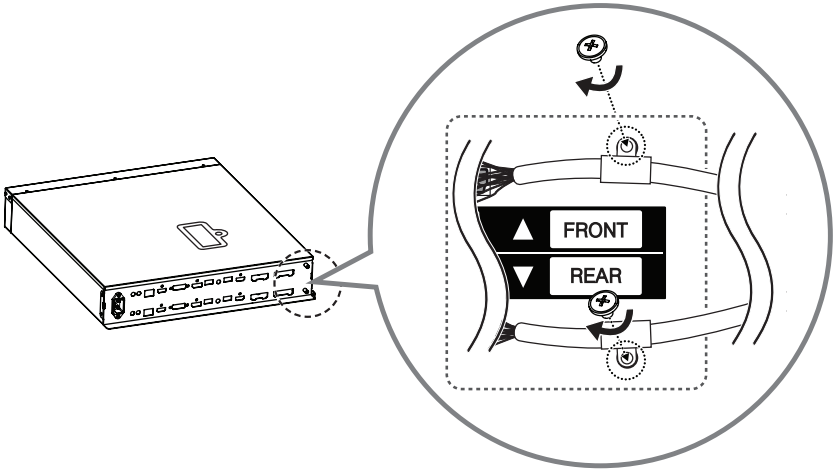

18 Position the jack cover so the cables fit into the cut spaces and attach it using two screws (M3 x L4.5).

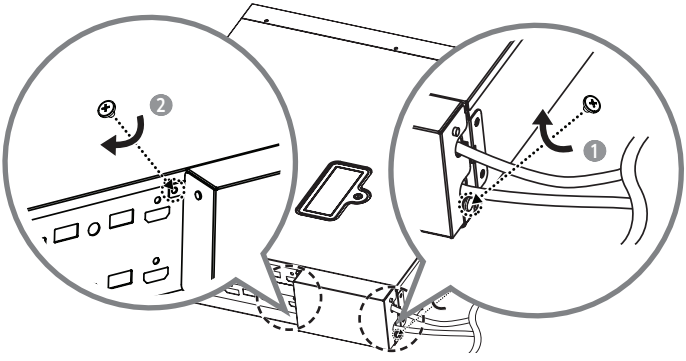

19 Attach the mounting brackets to the Signage box using four screws (M4 x L8).

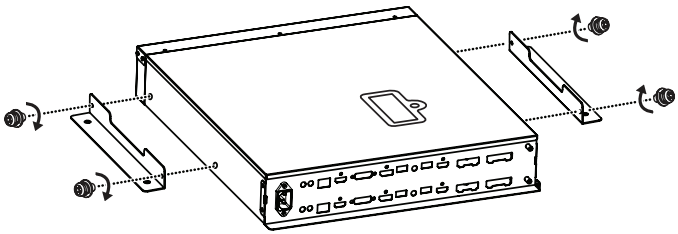

⚠ CAUTION

- Fasten the mounting bracket holes while ensuring that the Signage box does not move.
  - The product may fall and cause injury.

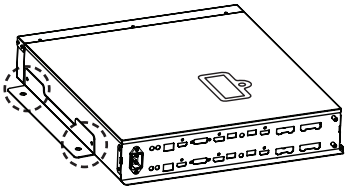

Connect the power cable to the Signage box.

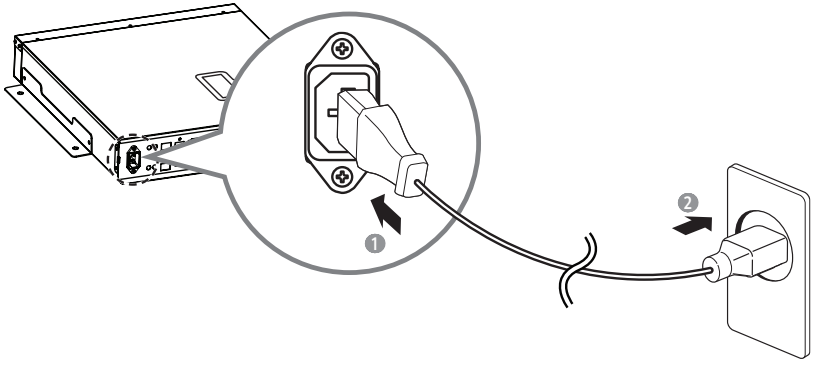

REMOTE CONTROL

The descriptions in this manual are based on the buttons on the remote control. Please read this manual carefully and use the monitor correctly.

To remove the battery, perform the actions in reverse. The image shown may differ from the actual accessories.

1 Insert a coin into the battery cover slot and use it to rotate the cover counterclockwise, then disconnect the battery cover.

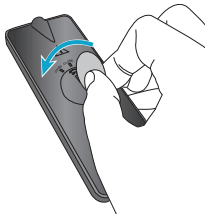

2 Insert the battery so that its minus (-) section matches with the minus (-) in the device's battery slot.

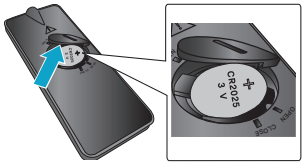

3 While being sure not to press down on the battery, place the cover in place, then turn it clockwise to close it.

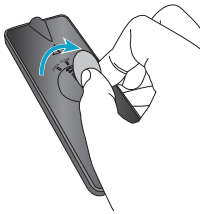

⚠ CAUTION

- Use a coin to open and close the cover instead of your fingernails to prevent damaging them.
- Do not ingest battery. This could cause chemical burns.
- Misuse of this device's battery could cause a fire or burns. Do not allow this device's battery to heat beyond 100 °C. Replace with a CR2025 or corresponding 3 V micro lithium battery. Use of another battery type could cause a fire or explosion. Safely discard fully spent batteries after use. Do so in a place out of the reach of children. Do not attempt to dismantle or incinerate the battery.
- The remote control [provided with this device] comes with a coin/button-shaped battery. Ingestion of this coin/button-shaped battery can cause serious internal burns and lead to death within two hours of consumption. Keep the battery away from children prior to/after use. If the battery cover will not tighten properly, discontinue use and store it somewhere that cannot be reached by children. If the battery is consumed, consult a physician immediately.

⚠ CAUTION

- Be sure to point the remote control toward the remote control sensor on the monitor.
- Some features of the remote control may not be supported in certain models.

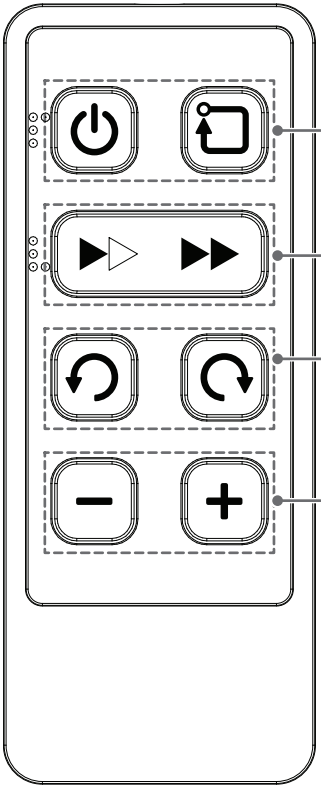

(Power) Turns rotation on/off.

(Home) Rotates the screen until it reaches its initial location.

Rotation speed button controls the rotation speed.

▶▷ : 0.5 RPM

▶▶ : 1 RPM

Rotation direction button controls the rotation direction.

Rotation angle fine tuning button modifies the angle of rotation.

PRODUCT SPECIFICATIONS

The product specifications below may change without prior notice to improve the features of the product.
The symbol ~ refers to alternating current, and ⎓ refers to direct current.

Input/output	IR IN, DC-IN (Adaptor 19 V ⎓)	
Environmental Conditions	Operating Temperature	0 °C to 40 °C
	Operating Humidity	10 % to 80 %
	Storage temperature	-20 °C to 60 °C
	Storage Humidity	5 % to 85 %
Power	Rated power	19 V ⎓
	Power consumption	On Mode: 2 W (Typ.) Off Mode: ≤ 1.0 W
AC/DC adapter	LCAP21C type, manufactured by Lien Chang	
	DC 19 V ⎓ 2.1 A	

- The illustrations in this manual may differ from the actual product and accessories.
- The product specifications below may change without prior notice to improve the features of the product.

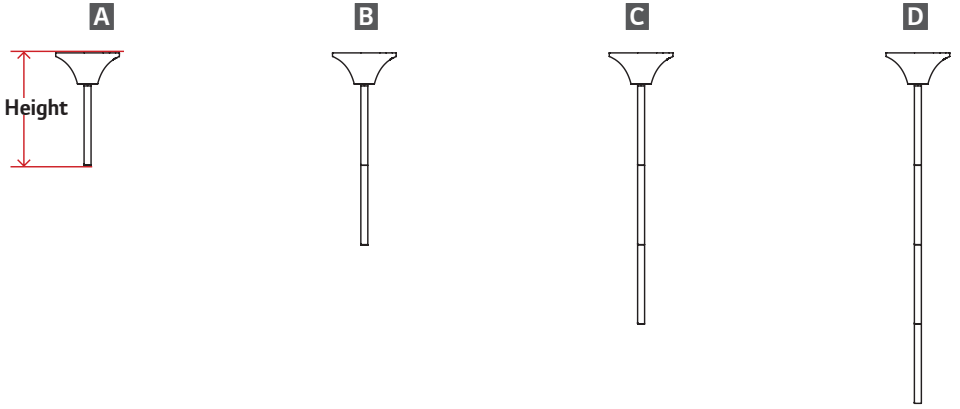

Type	Pipe No.	Dimensions (width x depth x height) (mm)	Weight (kg)
A	1	390.0 x 390.0 x 687.1	6.0
B	2	390.0 x 390.0 x 1172.1	8.2
C	3	390.0 x 390.0 x 1657.1	10.4
D	4	390.0 x 390.0 x 2142.1	12.6

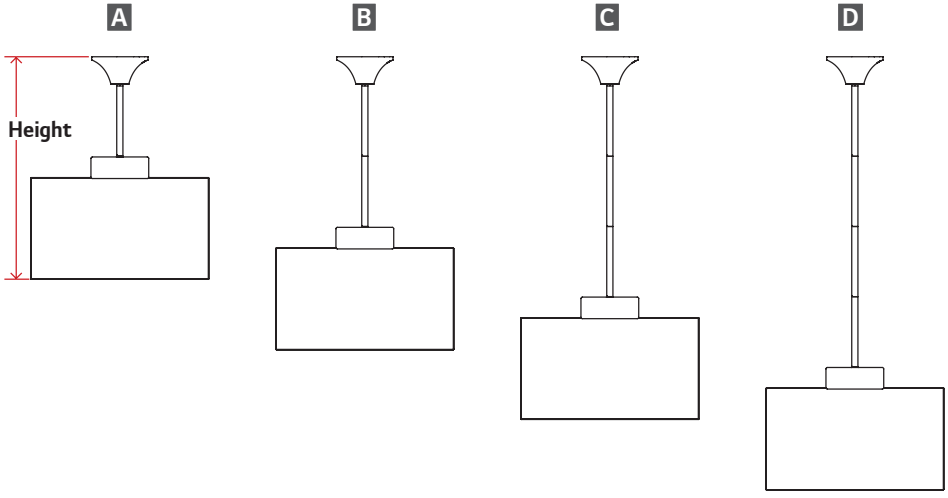

Type	Pipe No.	Dimensions (width x depth x height) (mm)	Weight (kg)
A	1	1227.6 x 390.0 x 1535.1	26.1
B	2	1227.6 x 390.0 x 2020.1	28.3
C	3	1227.6 x 390.0 x 2505.1	30.5
D	4	1227.6 x 390.0 x 2990.1	32.7

TROUBLESHOOTING

Problem	Action
The set does not rotate.	• Check the product's power. - Check that the power cord is properly connected to the electrical socket, then restart the product. • Did you press the power button on the remote control? - If the product does not operate when you press the power button on the remote control, change the remote control's battery.


LG
Life's Good