LG
Life's Good

ENGLISH

INSTALLATION MANUAL

AIR CONDITIONER

Please read this installation manual completely before installing the product.
Installation work must be performed in accordance with the national wiring standards by authorized personnel only.
Please retain this installation manual for future reference after reading it thoroughly.

SINGLE PACKAGE TYPE AIR CONDITIONER

P/NO : MFL67445819

www.lg.com

TIPS FOR SAVING ENERGY

Here are some tips that will help you minimize the power consumption when you use the air conditioner. You can use your air conditioner more efficiently by referring to the instructions below:

- Do not cool excessively indoors. This may be harmful for your health and may consume more electricity.
- Block sunlight with blinds or curtains while you are operating the air conditioner.
- Keep doors or windows closed tightly while you are operating the air conditioner.
- Adjust the direction of the air flow vertically or horizontally to circulate indoor air.
- Speed up the fan to cool or warm indoor air quickly, in a short period of time.
- Open windows regularly for ventilation as the indoor air quality may deteriorate if the air conditioner is used for many hours.
- Clean the air filter once every 2 weeks. Dust and impurities collected in the air filter may block the air flow or weaken the cooling / dehumidifying functions.

For your records

Staple your receipt to this page in case you need it to prove the date of purchase or for warranty purposes. Write the model number and the serial number here:

Model number : _____

Serial number : _____

You can find them on a label on the side of each unit.

Dealer's name : _____

Date of purchase : _____

IMPORTANT SAFETY INSTRUCTIONS

READ ALL INSTRUCTIONS BEFORE USING THE APPLIANCE.

Always comply with the following precautions to avoid dangerous situations and ensure peak performance of your product

WARNING

It can result in serious injury or death when the directions are ignored

CAUTION

It can result in minor injury or product damage when the directions are ignored

WARNING

- Installation or repairs made by unqualified persons can result in hazards to you and others.
- Installation MUST conform with local building codes or, in the absence of local codes, with the Nation Electrical Code NFPA 70/ANSI C1-1003 or current edition and Canadian Electrical Code Part1 CSA C.22.1.
- The information contained in the manual is intended for use by a qualified service technician familiar with safety procedures and equipped with the proper tools and test instruments.
- Failure to carefully read and follow all instructions in this manual can result in equipment malfunction, property damage, personal injury and/or death.

Installation

- Do not use a defective or underrated circuit breaker. Use this appliance on a dedicated circuit.
  - There is risk of fire or electric shock.
- For electrical work, contact the dealer, seller, a qualified electrician, or an Authorized Service Center.
  - Do not disassemble or repair the product. There is risk of fire or electric shock.
- Always ground the product.
  - There is risk of fire or electric shock.
- Install the panel and the cover of control box securely.
  - There is risk of fire or electric shock.
- Always install a dedicated circuit and breaker.
  - Improper wiring or installation may cause fire or electric shock
- Use the correctly rated breaker or fuse.
  - There is risk of fire or electric shock.
- Use the specified wires to connect the unit.
  - There is risk of fire or electric shock.
- Do not install, remove, or re-install the unit by yourself (customer).
  - There is risk of fire, electric shock, explosion, or injury.
- Be cautious when unpacking and installing the product.
  - Sharp edges could cause injury. Be especially careful of the case edges and the fins on the condenser and evaporator.
- For installation, always contact the dealer or an Authorized Service Center.
  - There is risk of fire, electric shock, explosion, or injury.
- Do not install the product on a defective installation stand.
  - It may cause injury, accident, or damage to the product.

- Be sure the installation area does not deteriorate with age.
  - If the base collapses, the air conditioner could fall with it, causing property damage, product failure, and personal injury.
- Use a vacuum pump or Inert (nitrogen) gas when doing leakage test or air purge. Do not compress air or Oxygen and Do not use Flammable gases. Otherwise, it may cause fire or explosion.
  - There is the risk of death, injury, fire or explosion.

Operation

- Do not let the air conditioner run for a long time when the humidity is very high and a door or a window is left open.
  - Moisture may condense and wet or damage furniture.
- Take care to ensure that power cable could not be pulled out or damaged during operation.
  - There is risk of fire or electric shock.
- Do not place anything on the power cable.
  - There is risk of fire or electric shock.
- Do not plug or unplug the power supply plug during operation.
  - There is risk of fire or electric shock.
- Do not touch(operate) the product with wet hands.
  - There is risk of fire or electrical shock.
- Do not place a heater or other appliances near the power cable.
  - There is risk of fire and electric shock.
- Do not allow water to run into electric parts.
  - It may cause failure of the product or electric shock.
- Do not store or use flammable gas or combustibles near the product.
  - There is risk of fire or failure of product.
- Do not use the product in a tightly closed space for a long time.
  - Oxygen deficiency could occur.
- When flammable gas leaks, turn off the gas and open a window for ventilation before turn the product on.
  - Do not use the telephone or turn switches on or off. There is risk of explosion or fire
- If strange sounds, or small or smoke comes from product. Turn the breaker off or disconnect the power supply cable.
  - There is risk of electric shock or fire.
- Stop operation and close the window in storm or hurricane. If possible, remove the product from the window before the hurricane arrives.
  - There is risk of property damage, failure of product, or electric shock.
- Do not open the panel of the product during operation. (Do not touch the electrostatic filter, if the unit is so equipped.)
  - There is risk of physical injury, electric shock, or product failure.
- When the product is soaked (flooded or submerged), contact an Authorized Service Center.
  - There is risk of fire or electric shock.
- Be cautious that water could not enter the product.
  - There is risk of fire, electric shock, or product damage.
- Ventilate the product from time to time when operating it together with a stove, etc.
  - There is risk of fire or electric shock.
- Turn the main power off when cleaning or maintaining the product.
  - There is risk of electric shock.
- When the product is not be used for a long time, disconnect the power supply plug or turn off the breaker.
  - There is risk of product damage or failure, or unintended operation.

- Take care to ensure that nobody could step on or fall onto the unit.
  - This could result in personal injury and product damage.

⚠ CAUTION

Installation

- Always check for gas (refrigerant) pressure after installation or repair of product.
  - Low refrigerant levels may cause failure of product.
- Install the drain hose to ensure that water is drained away properly.
  - A bad connection may cause water leakage.
- Keep level even when installing the product.
  - To avoid vibration or water leakage.
- Do not install the product where the noise or hot air from the outdoor unit could damage the neighborhoods.
  - It may cause a problem for your neighbors.
- Don't use people to lift and transport the product.
  - Avoid personal injury.
- Do not install the product where it will be exposed to sea wind (salt spray) directly.
  - It may cause corrosion on the product. Corrosion, particularly on the condenser and evaporator fins, could cause product malfunction or inefficient operation.

Operation

- Do not expose the skin directly to cool air for long periods of time. (Don't sit in the draft.)
  - This could harm to your health.
- Do not use the product for special purposes, such as preserving foods, works of art, etc. It is a consumer air conditioner, not a precision refrigeration system.
  - There is risk of damage or loss of property.

ENGLISH

TABLE OF CONTENTS

2 TIPS FOR SAVING ENERGY

3 IMPORTANT SAFETY INSTRUCTIONS

7 INTRODUCTION

7 Features (10 / 12.5 / 15 RT)

8 Features (20 / 25 RT)

9 DIMENSIONAL DATA (10 / 12.5 / 15 RT)

10 DIMENSIONAL DATA (20 / 25 RT)

11 INSTALLATION OF UNIT

11 Inspection

11 Location and Recommendations

12 Ductwork

12 Change Airflow

13 Plumbing materials and storage methods

15 Condensate Drain Piping

15 Filter Installation

15 Installation of Remote Controller

20 Electronic Wiring

21 Field Wiring

29 Connect the cable to the Product

31 Dip Switch Setting in Indoor Main PCB

31 Group Control

32 Evaporator Fan Adjustment

33 Trial Run Mode

34 Self-Diagnosis Function

39 Starting the Unit

40 Final Installation Checklist and Maintenance

42 Installation guide at the seaside

INTRODUCTION

Features (10 / 12.5 / 15 RT)

Front View

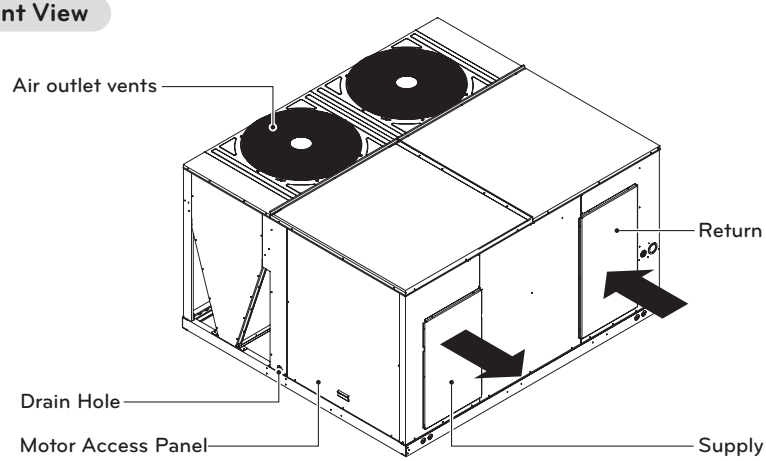

Rear View

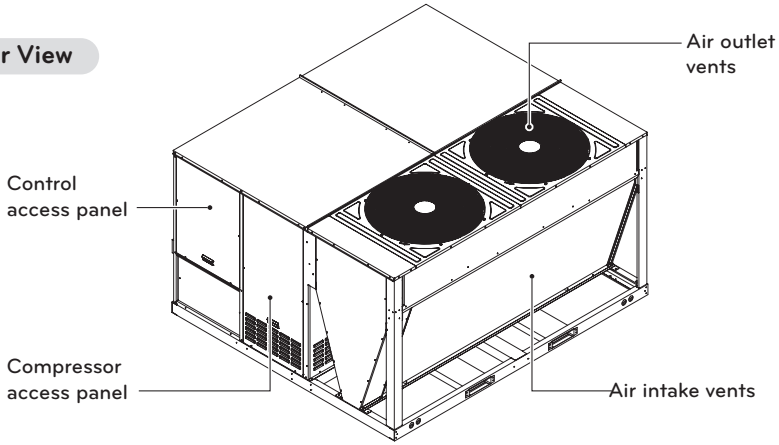

Features (20 / 25 RT)

Front View

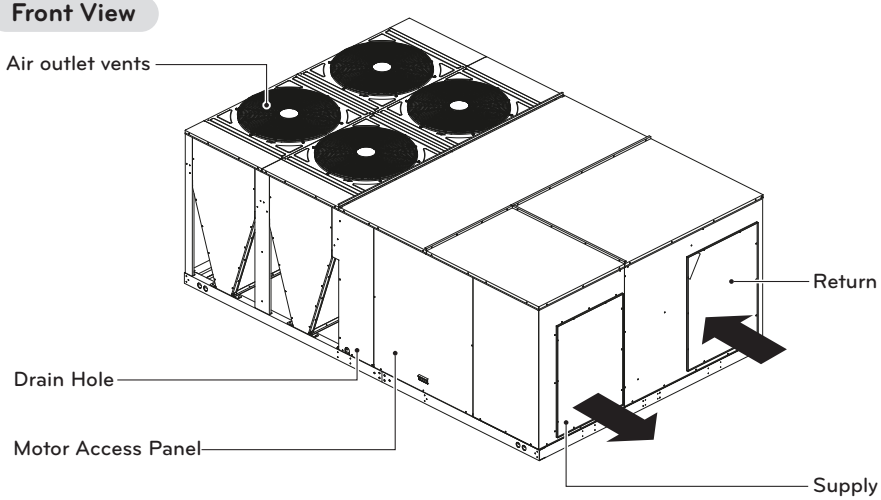

Rear View

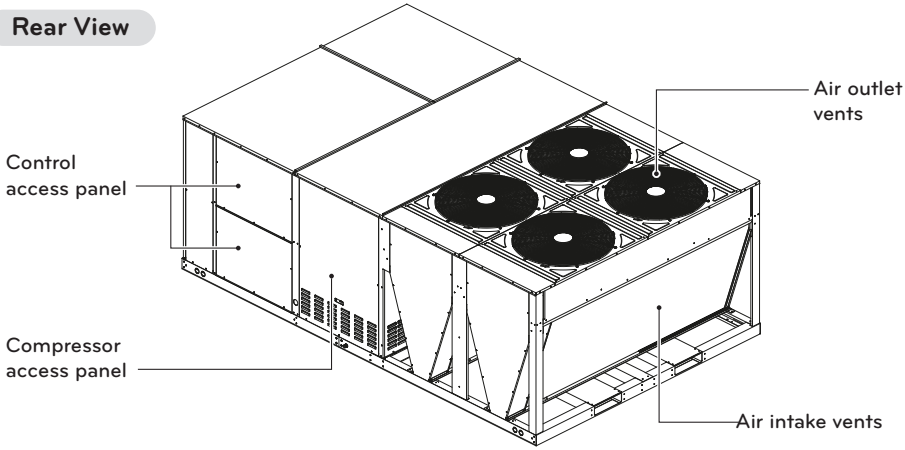

DIMENSIONAL DATA (10 / 12.5 / 15 RT)

Single packaged cooling unit are designed for outdoor mounting with vertical condenser discharge. They can be located either at ground level or on roof.

Each unit contains an operating charge of Refrigerant as shipped.

Product Dimensions (Figure 1A)

[Unit : mm (inch)]

Tool	10 / 12.5 / 15 RT
A	1,237 (48-11/16)
B	2,230 (87-25/32)
C	1,958 (77-3/32)
D	36 (1-13/32)
E	60 (2-3/8)

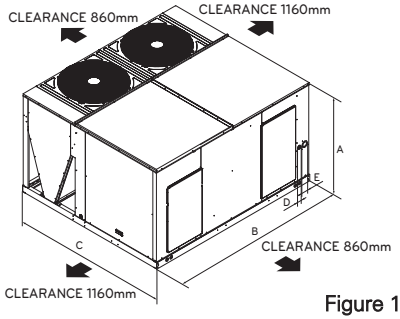

Figure 1A

HORIZONTAL FLOW APPLICATION (Figure 1B)

[Unit : mm (inch)]

Tool	10 / 12.5 / 15 RT
A	484 (19-1/16)
B	864 (34-1/32)
C	482 (18-31/32)
D	206 (8-1/8)
E	126 (4-31/32)
F	913 (35-15/16)
G	130 (5-1/8)
H	800 (31-1/2)

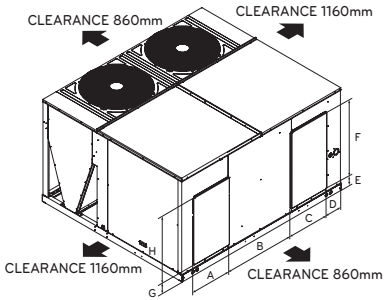

Figure 1B

DOWN FLOW APPLICATION (Figure 1C)

[Unit : mm (inch)]

Tool	10 / 12.5 / 15 RT
A	484 (19-1/16)
B	427 (16-13/16)
C	482 (18-31/32)
D	642 (25-9/32)
E	92 (3-5/8)
F	800 (31-1/2)
G	92 (3-5/8)
H	913 (35-15/16)

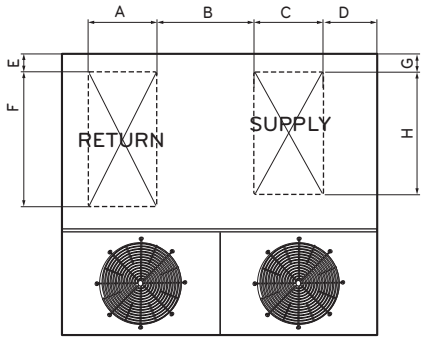

TOP VIEW

Figure 1C

DIMENSIONAL DATA (20 / 25 RT)

Single packaged cooling unit are designed for outdoor mounting with vertical condenser discharge. They can be located either at ground level or on roof.

Each unit contains an operating charge of Refrigerant as shipped.

Product Dimensions (Figure 1A)

[Unit : mm (inch)]

Tool	20 / 25 RT
A	1,242 (48-29/32)
B	2,230 (87-25/32)
C	3,520 (138-19/32)

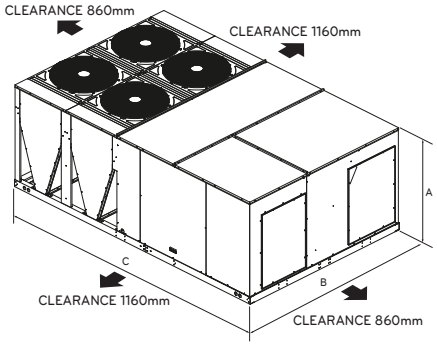

Figure 1A

HORIZONTAL FLOW APPLICATION (Figure 1B)

[Unit : mm (inch)]

Tool	20 / 25 RT
A	616 (24-1/4)
B	678 (26-11/16)
C	655 (25-25/32)
D	60 (2-3/8)
E	125 (4-29/32)
F	882 (34-23/32)
G	115 (4-17/32)
H	860 (33-27/32)

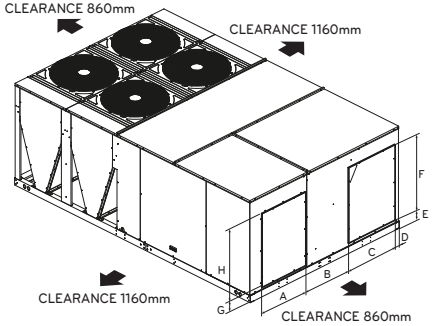

Figure 1B

DOWN FLOW APPLICATION (Figure 1C)

[Unit : mm (inch)]

Tool	20 / 25 RT
A	655 (25-25/32)
B	457 (18)
C	616 (24-1/4)
D	196 (7-23/32)
E	116 (4-9/16)
F	882 (34-23/32)
G	116 (4-9/16)
H	860 (33-27/32)

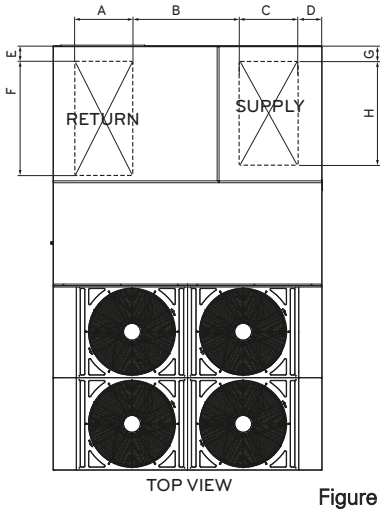

Figure 1C

INSTALLATION OF UNIT

Inspection

1 Check for damage after unit is unloaded. Report promptly, to the carrier, any damage found to unit. Do not drop unit.
2 Check the unit nameplate to determine if the unit voltage is correct for the application. Determine if adequate electrical power is available. Refer to the application specifications.
3 Check to be sure the refrigerant charge has been retained during shipment. Access to 1/4" flare pressure taps may be gained by removing compressor compartment access panel.

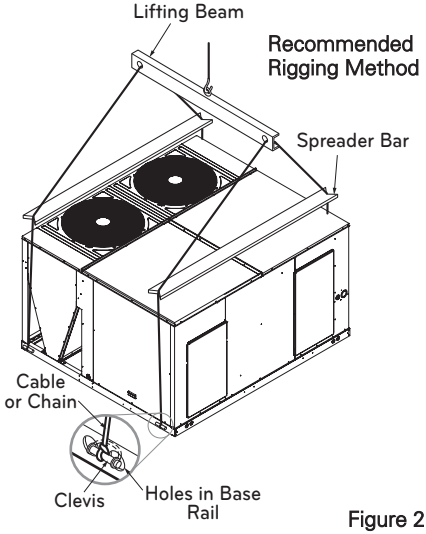

Figure 2

Location and Recommendations

Unit Support

If unit is to be roof mounted check building codes for weight distribution requirements.

Location and Clearances

Installation of unit should conform to local building codes and the National Electrical Code. Select a location that will permit unobstructed airflow into the condenser coil and away from the fan discharge and permit unobstructed service access into the compressor compartment. Suggested airflow clearances and service clearances are given in Figure 1.

Placing and Rigging

Rig the unit using either belt or cable slings. The sling eyelet must be placed through the lifting holes in the base rail of the unit. The point where the slings meet the lifting eyelet should be at least 1.8m above the unit. Use spreader bars to prevent excessive pressure on the top of the unit during lifting.

NOTE

- The use of "spreader bars" is required when hoisting the unit (prevents damage to sides and top). Top crating can be used as spreader bars.

Roof Mounted Units

On new roofs, the curb should be welded directly to the roof deck. For existing construction, nailers must be installed under the curb if welding is not possible. Be sure attach the down flow ductwork to the curb before setting unit in place.

When installing the unit, it must be level to insure proper condensate flow from the unit drain pan.

Slab Mount

"For ground level installation, the unit base should be adequately supported and hold the unit near level. The installation must meet the guidelines set forth in local codes."

Net Weight	kg	lbs
10/12.5/15RT	550	1,212
20/25RT	950	2,094

Ductwork

Ductwork construction guidelines

Connections to the unit should be made with 3"(76mm) canvas connectors to minimize noise and vibration transmission.

Elbows with turning vanes or splitters are recommended to minimize air noise and resistance.

The first elbow in the ductwork leaving the unit should be no closer than three times blower diameter to avoid turbulence and back pressure.

Attaching Horizontal Ductwork to the Unit

All conditioned air ductwork should be insulated to minimize heating and cooling duct losses. Use minimum of 2"(50mm) of insulation with a vapor barrier. The outside ductwork must be weather proofed between the unit and the building.

When attaching ductwork to a horizontal unit, provide a flexible water tight connection to prevent noise transmission from the unit to the ducts. The flexible connection must be indoors and molded out of heavy canvas.

NOTE

- Do not draw the canvas taut between the solid ducts.

Change Airflow

Horizontal flow to Down flow Conversion

1 Remove the covers from the down flow openings on the base panel by unscrewing as shown.

2 Close the horizontal Supply and Return openings on the front panel by attaching the covers firmly on to it which are removed from the down flow openings.

* Cover assembly should be assembled as insulation being downward.

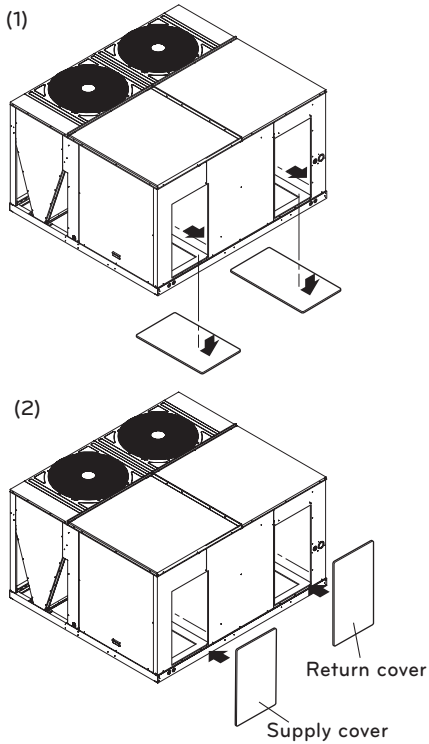

Figure 3

Plumbing materials and storage methods

Pipe must be able to obtain the specified thickness and should be used with low impurities. Also when handling storage, pipe must be careful to prevent a fracture, deformity and wound. Should not be mixed with contaminations such as dust, moisture.

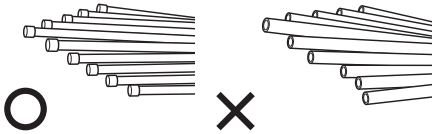

Refrigerant piping on three principles

	Drying	Cleanliness	Airtight
	Should be no moisture inside	No dust inside.	There is no refrigerant leakage
Items	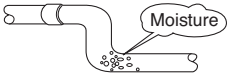		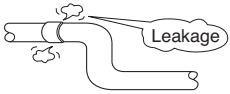
Cause failure	- Significant hydrolysis of refrigerant oil - Degradation of refrigerant oil - Poor insulation of the compressor - Do not cold and warm - Clogging of EEV, Capillary	- Degradation of refrigerant oil - Poor insulation of the compressor - Do not cold and warm - Clogging of EEV, Capillary	- Gas shortages - Degradation of refrigerant oil - Poor insulation of the compressor - Do not cold and warm
Counter measure	- No moisture in the pipe - Until the connection is completed, the plumbing pipe entrance should be strictly controlled. - Stop plumbing at rainy day. - Pipe entrance should be taken side or bottom. - When removal burr after cutting pipe, pipe entrance should be taken down. - Pipe entrance should be fitted cap when pass through the walls.	- No dust in the pipe. - Until the connection is completed, the plumbing pipe entrance should be strictly controlled. - Pipe entrance should be taken side or bottom. - When removal burr after cutting pipe, pipe entrance should be taken down. - Pipe entrance should be fitted cap when pass through the walls.	- Airtightness test should be. - Brazing operations to comply with standards. - Flare to comply with standards. - Flange connections to comply with standards.

Nitrogen substitution method

Welding, as when heating without nitrogen substitution a large amount of the oxide film is formed on the internal piping.

The oxide film is a caused by clogging EEV, Capillary, oil hole of accumulator and suction hole of oil pump in compressor.

It prevents normal operation of the compressor.

In order to avoid this problem, Welding should be done after replacing air by nitrogen gas.

When welding plumbing pipe, the work is required.

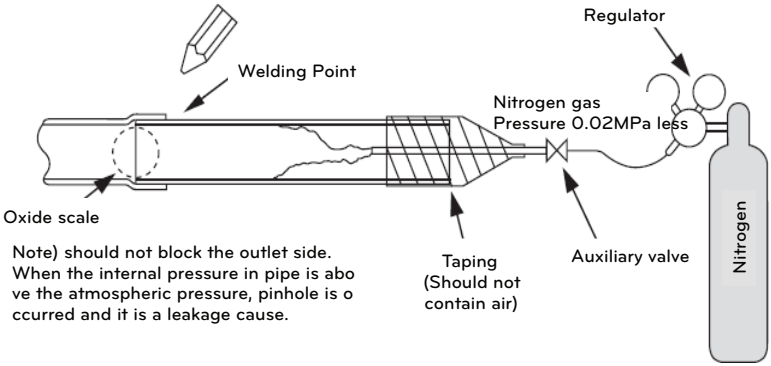

⚠ CAUTION

1 Always use the nitrogen.(not use oxygen, carbon dioxide, and a Chevron gas):
Please use the following nitrogen pressure 0.02MPa
Oxygen – Promotes oxidative degradation of refrigerant oil.
Because it is flammable, it is strictly prohibited to use
Carbon dioxide – Degrade the drying characteristics of gas
Chevron Gas – Toxic gas occurs when exposed to direct flame.

2 Always use a pressure reducing valve.

3. Please do not use commercially available antioxidant.
The residual material seems to be the oxide scale is observed.
In fact, due to the organic acids generated by oxidation of the alcohol contained in the anti-oxidants, ants nest corrosion occurs. (causes of organic acid alcohol + copper + water + temperature)

Condensate Drain Piping

A 1 inch female condensate drain connection is located on the corner of the unit next to the motor access panel. A trap should be installed and filled with water before starting the unit to avoid air from being drawn through. Follow local codes and standard piping practices when running the drain line. Pitch the line downward, away from the unit, and avoid long horizontal runs. See Figure 4.

Do not use reducing fittings in the drain lines. The condensate drain must be:

1 Made of 1" pipe size.(NPT)
2 Pitched 1/4" per foot to provide free drainage to convenient drain system.
3 Trapped
4 Must not be connected to closed drain system.

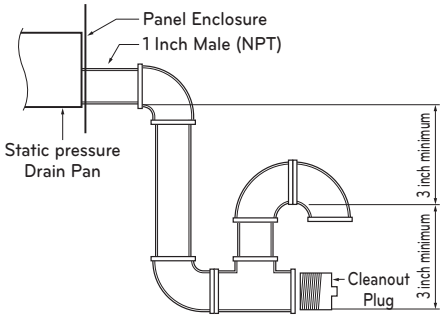

Figure 4

Filter Installation

This Unit Filters are anti-bacteria and washable type.

The filter is placed in the flange connected on the return opening. It can be removed by opening the cover plate on the side of the flange

The flange can be detached and connected to the bottom return opening when down flow installation is required.

NOTE

- Do not operate unit without filters in place.

Installation of Remote Controller

1 **Please insert wired remote controller connection cable to the CN-REMO in indoor PCB, or connect directly local connection cable to terminal block in control box.**
- It should be use supplied local connection cable permitted in each national standard.

<10/12.5/15RT>

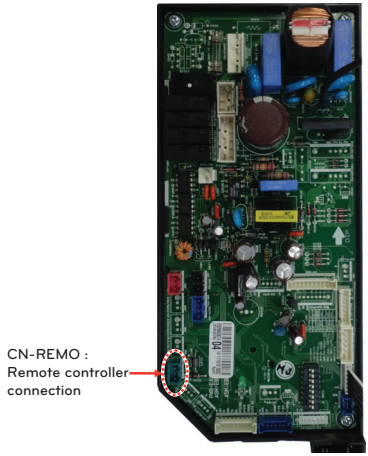

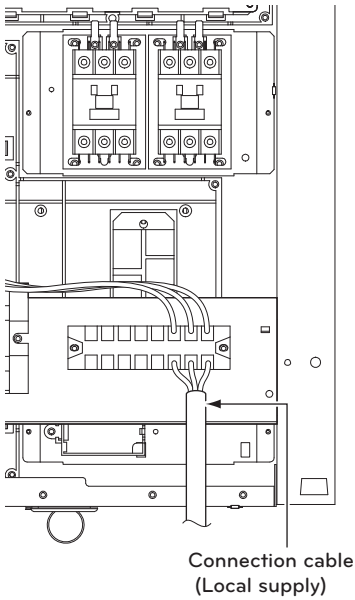

<20/25RT>

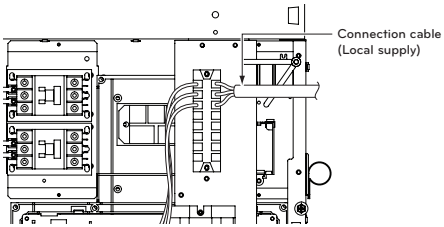

2 **Please fix tightly using provided screw after placing remote controller setup board on the place where you like to setup.**

- Please set it up not to bend because poor setup could take place if setup board bends.
  Please set up remote controller board fit to the reclamation box if there is a reclamation box.

3 **Can set up Wired remote controller cable into three directions.**

- Setup direction: the surface of wall reclamation, upper, right
- If setting up remote controller cable into upper and right side, please set up after removing remote controller cable guide groove.

* Remove guide groove with long nose.

① Reclamation to the surface of the wall
② Upper part guide groove
③ Right part guide groove

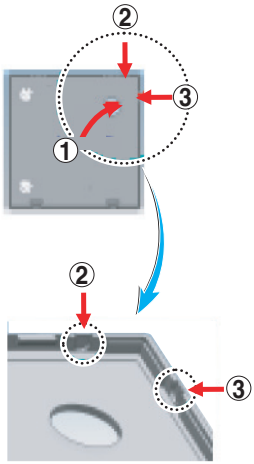

<Wire guide grooves>

4 Please fix remote controller upper part into the setup board attached to the surface of the wall, as the picture below, and then, connect with setup board by pressing lower part.

- Please connect not to make a gap at the remote controller and setup board's upper and lower, right and left part.

<Connecting order>

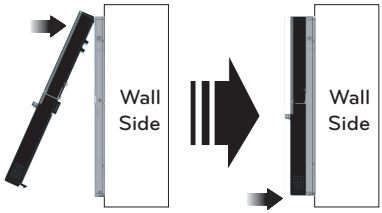

When separating remote controller from setup board, as the picture below, after inserting into the lower separating hole using screw driver and then, spinning clockwise, remote controller is separated.

- There are two separating holes. Please individually separate one at a time.
- Please be careful not to damage the inside components when separating.

<Separating order>

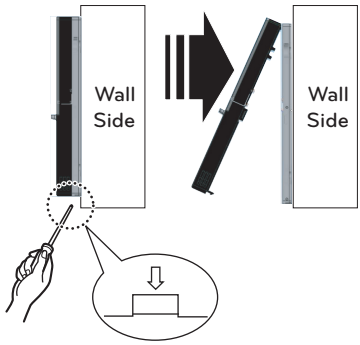

5 Please connect indoor unit and remote controller using connection cable.

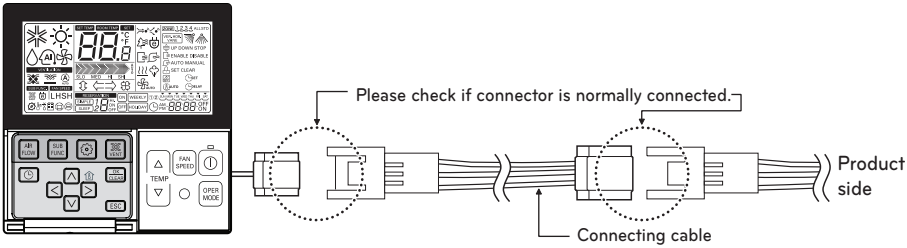

<Meaning of wire color>

12V	Red
Signal	Yellow
GND	Black

6 Please use extension cable if the distance between wired remote controller and the product is more than 10m.

⚠ CAUTION

When installing the wired remote controller, do not bury it in the wall.
(It can cause damage in the temperature sensor.)

Do not install the cable to be 50m or above.
(It can cause communication error.)

- When installing the extension cable, check the connecting direction of the connector of the remote controller side and the product side for correct installation.
- If you install the extension cable in the opposite direction, the connector will not be connected.
- Specification of extension cable: 2547 1007 22# 2 core 3 shield 5 or above.
- Apply totally enclosed noncombustible conduit in case of local building code Requiring plenum cable usage.

Wired remote controller installation

- Since the room temperature sensor is in the remote controller, the remote controller box should be installed in a place away from direct sunlight, high humidity and direct supply of cold air to maintain proper space temperature.
  Install the remote controller about 5ft(1.5m) above the floor in an area with good air circulation at an average temperature.

Do not install the remote controller where it can be affected by:

- Drafts, or dead spots behind doors and in corners.
- Hot or cold air from ducts.
- Radiant heat from sun or appliances.
- Concealed pipes and chimneys.
- Uncontrolled areas such as an outside wall behind the remote controller.
- This remote controller is equipped with a seven segment LED. display. For proper display of the remote controller LED's, the remote controller should be installed properly as shown in Fig.5. (The standard height is 1.2~1.5 m from floor level.)

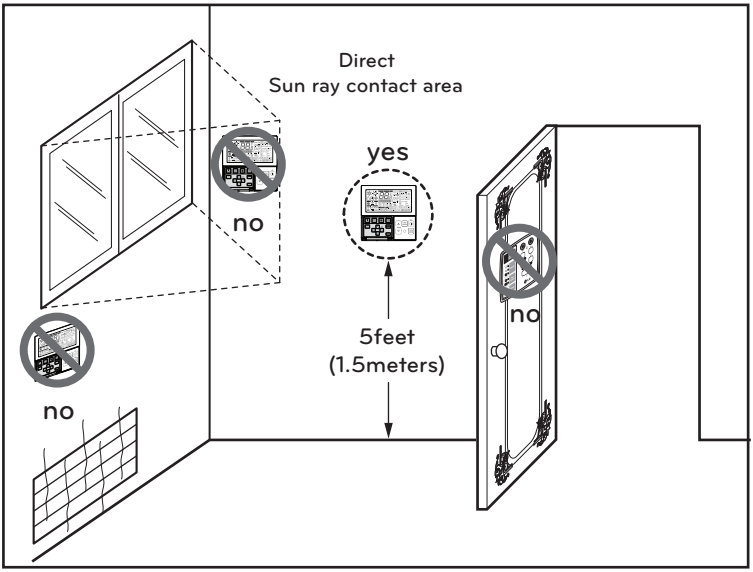

Figure 5 Typical locations for remote controller

Electronic Wiring

Follow ordinance of your governmental organization for technical standard related to electrical equipment, wiring regulations and guidance of each electric power company.

WARNING

- Be sure to have authorized electrical engineers do the electric work using special circuits in accordance with regulations and this installation manual. If power supply circuit has a lack of capacity or electric work deficiency, it may cause an electric shock or fire.

Use round crimp-style terminals for connecting wires to the terminal block.

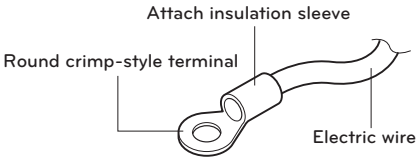

CAUTION

- The circuit diagram is not subject to change without notice.
- Be sure to connect wires according to the circuit diagram.
- Connect the wires firmly, so that not to be pulled out easily.
- Connect the wires according to color codes by referring the circuit diagram.

CAUTION

- Provide a circuit breaker between power source and the unit as shown below.

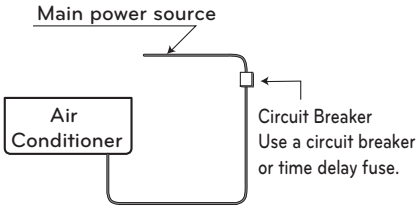

CAUTION

- The power cord connected to the outdoor unit(Main Power supply cable) should be complied with the following specifications (Cable type approved by HAR or SAA).

Cable Type	H07RN-F

Field Wiring

10/12.5/15 RT – 220 V3~ 60 Hz

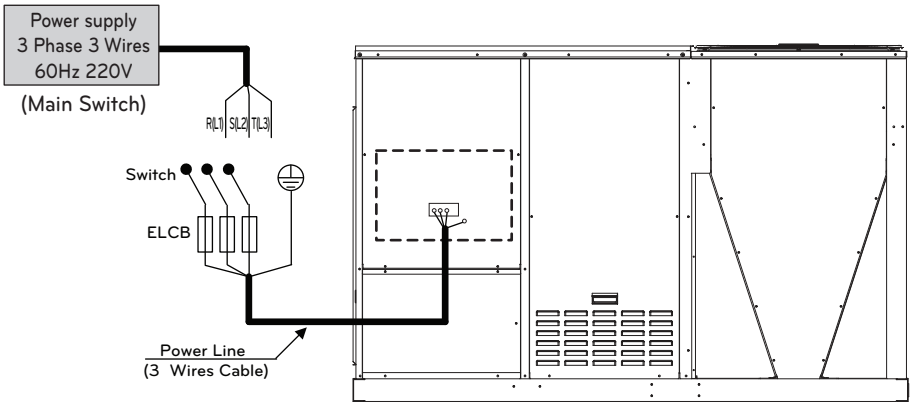

CAUTION

- Unit ground Lines are required for preventing electrical shock accident during current leakage,
  Communication disorder by noise effect and motor current leakage (without connection to pipe).
- Install the main switch that can interrupt all the power sources in an integrated manner because this system consists of the equipment utilizing the multiple power sources.
- If there exists the possibility of reversed phase, lose phase, momentary blackout or the power goes on and off while the product is operating, attach a reversed phase protection circuit locally.
  Running the product in reversed phase may break the compressor and other parts.

10/12.5/15RT - 380-415 V3N~ 50 Hz

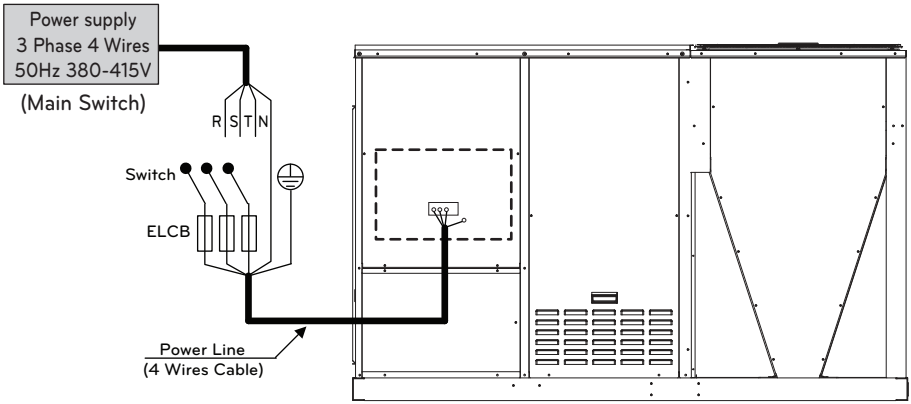

CAUTION

- Unit ground Lines are required for preventing electrical shock accident during current leakage, Communication disorder by noise effect and motor current leakage (without connection to pipe).
- Install the main switch that can interrupt all the power sources in an integrated manner because this system consists of the equipment utilizing the multiple power sources.
- If there exists the possibility of reversed phase, lose phase, momentary blackout or the power goes on and off while the product is operating, attach a reversed phase protection circuit locally.
  Running the product in reversed phase may break the compressor and other parts.

10/12.5/15RT - 380 V3N~ 60 Hz

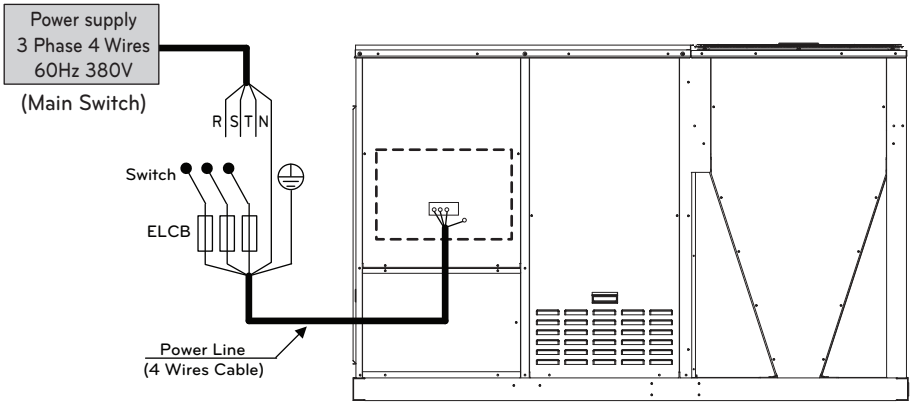

⚠ CAUTION

- Unit ground Lines are required for preventing electrical shock accident during current leakage,
  Communication disorder by noise effect and motor current leakage (without connection to pipe).
- Install the main switch that can interrupt all the power sources in an integrated manner because this system consists of the equipment utilizing the multiple power sources.
- If there exists the possibility of reversed phase, lose phase, momentary blackout or the power goes on and off while the product is operating, attach a reversed phase protection circuit locally.
  Running the product in reversed phase may break the compressor and other parts.

15RT - 460 V3~ 60 Hz

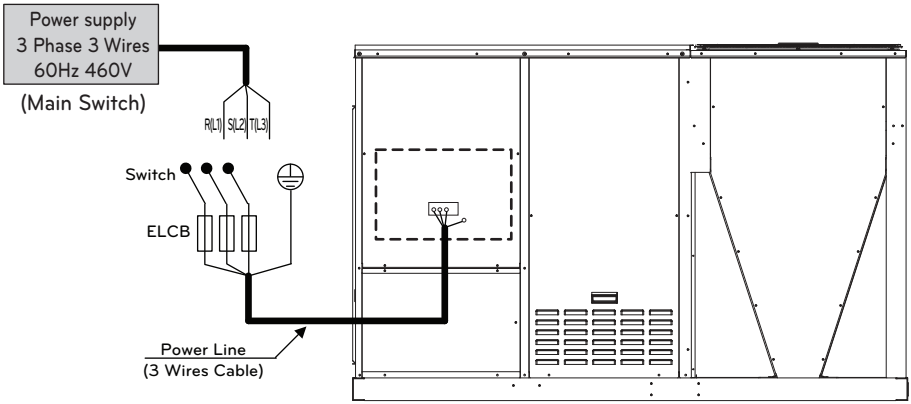

⚠ CAUTION

- Unit ground Lines are required for preventing electrical shock accident during current leakage,
  Communication disorder by noise effect and motor current leakage (without connection to pipe).
- Install the main switch that can interrupt all the power sources in an integrated manner because this system consists of the equipment utilizing the multiple power sources.
- If there exists the possibility of reversed phase, lose phase, momentary blackout or the power goes on and off while the product is operating, attach a reversed phase protection circuit locally.
  Running the product in reversed phase may break the compressor and other parts.

20/25 RT – 220 V3~ 60 Hz

- When the power source is supplied to Each outdoor unit individually.

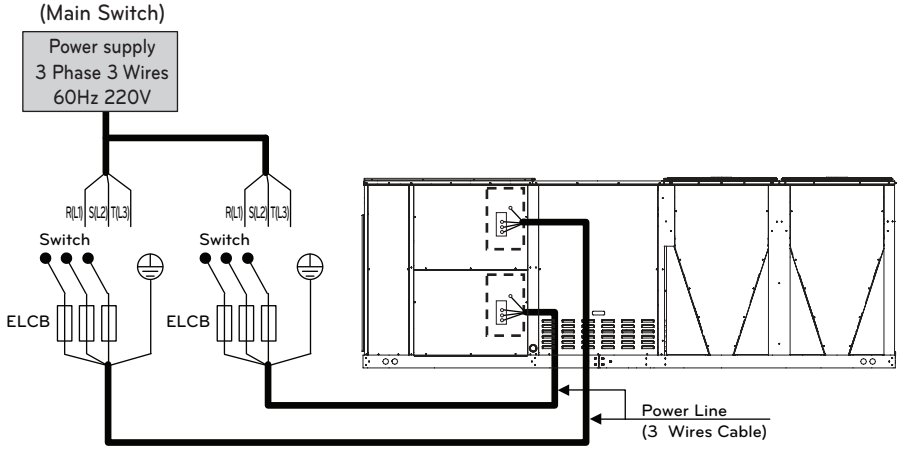

CAUTION

- Unit ground Lines are required for preventing electrical shock accident during current leakage,
  Communication disorder by noise effect and motor current leakage (without connection to pipe).
- Install the main switch that can interrupt all the power sources in an integrated manner because this system consists of the equipment utilizing the multiple power sources.
- If there exists the possibility of reversed phase, lose phase, momentary blackout or the power goes on and off while the product is operating, attach a reversed phase protection circuit locally.
  Running the product in reversed phase may break the compressor and other parts.

20/25 RT – 380-415 V3N~ 50 Hz

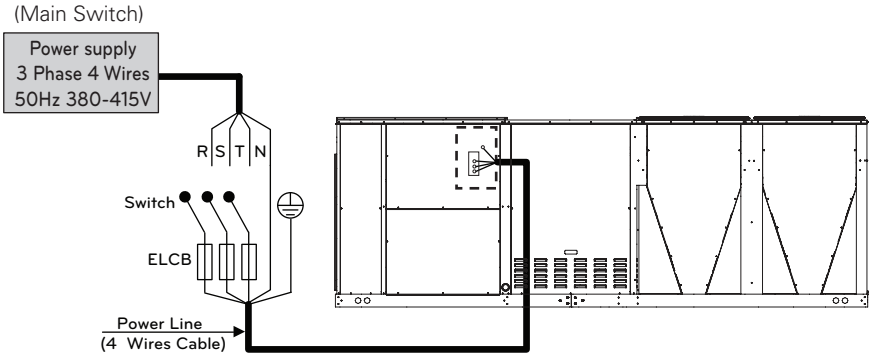

⚠ CAUTION

- Unit ground Lines are required for preventing electrical shock accident during current leakage,
  Communication disorder by noise effect and motor current leakage (without connection to pipe).
- Install the main switch that can interrupt all the power sources in an integrated manner because this system consists of the equipment utilizing the multiple power sources.
- If there exists the possibility of reversed phase, lose phase, momentary blackout or the power goes on and off while the product is operating, attach a reversed phase protection circuit locally.
  Running the product in reversed phase may break the compressor and other parts.

20/25 RT – 380 V3N~ 60 Hz

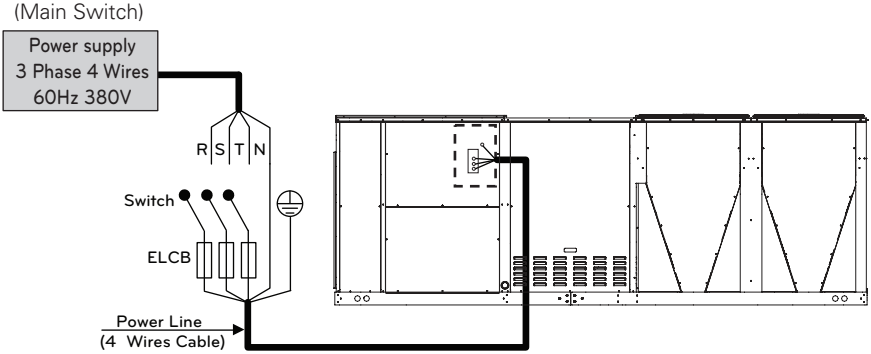

⚠ CAUTION

- Unit ground Lines are required for preventing electrical shock accident during current leakage,
  Communication disorder by noise effect and motor current leakage (without connection to pipe).
- Install the main switch that can interrupt all the power sources in an integrated manner because this system consists of the equipment utilizing the multiple power sources.
- If there exists the possibility of reversed phase, lose phase, momentary blackout or the power goes on and off while the product is operating, attach a reversed phase protection circuit locally.
  Running the product in reversed phase may break the compressor and other parts.

20/25 RT – 460 V3~ 60 Hz

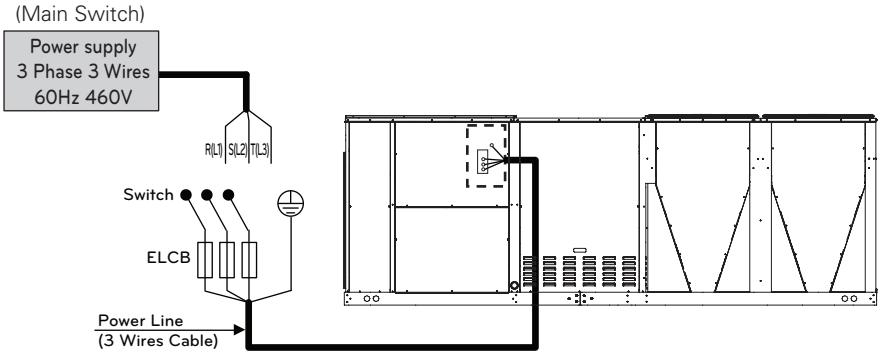

⚠ CAUTION

- Unit ground Lines are required for preventing electrical shock accident during current leakage,
  Communication disorder by noise effect and motor current leakage (without connection to pipe).
- Install the main switch that can interrupt all the power sources in an integrated manner because this system consists of the equipment utilizing the multiple power sources.
- If there exists the possibility of reversed phase, lose phase, momentary blackout or the power goes on and off while the product is operating, attach a reversed phase protection circuit locally.
  Running the product in reversed phase may break the compressor and other parts.

Connect the cable to the Product

1 Remove the cover control from the unit by loosening the screw.
Connect the wires to the terminals on the control board individually as the following.

2 Secure the cable onto the control board with the holder (clamper).

3 Refix the cover control to the original position with the screw.

4 Use a recognized circuit breaker between the power source and the unit. A disconnection device to adequately disconnect all supply lines must be fitted.

CAUTION

- To select Circuit Breaker correctly, refer to Electric Characteristics in the Product Data Book.

10/12.5/15 RT - 220 V3~
15RT - 460 V3~

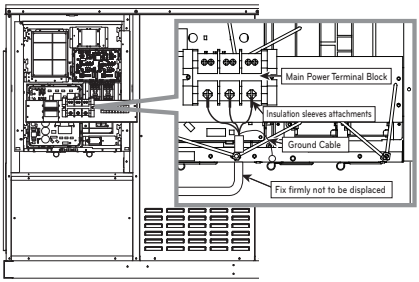

10/12.5/15 RT - 380-415 V3N~ / 380 V3N~

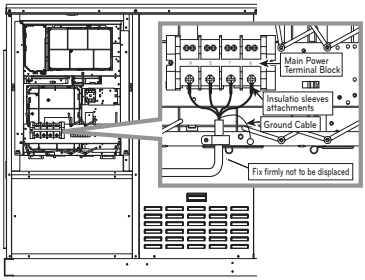

20/25 RT - 220 V3~

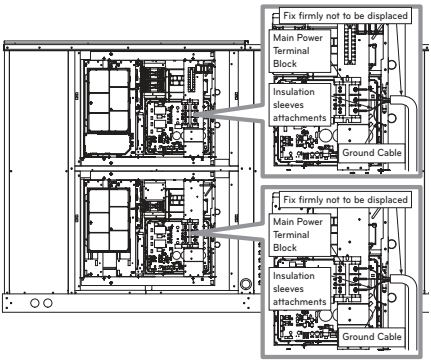

The power source must be supplied to each Control Box (A:Master, B:Slave) individually.

20/25 RT - 380-415 V3N~ / 380 V3N~

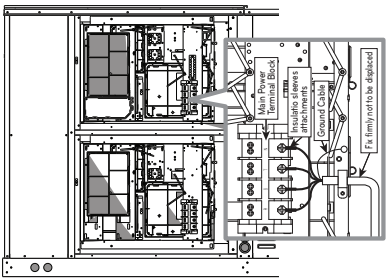

The power source must be supplied to the Master Control Box (A:Master) only.

20/25RT - 460 V3~

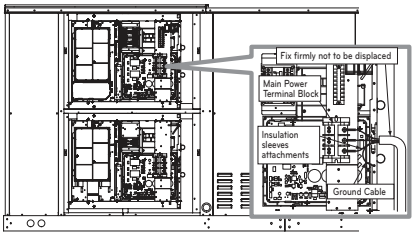

The power source must be supplied to the Master Control Box (A:Master) only.

10/12.5/15 RT

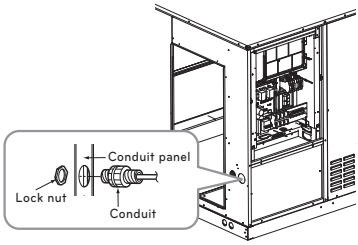

20/25 RT

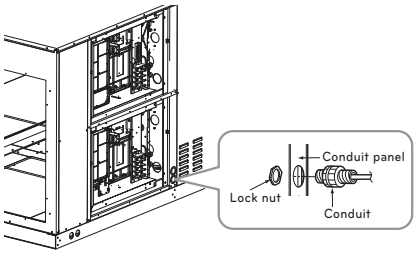

WARNING

- Ground Lines to the product are required for preventing electrical shock accident during current leakage, Transmission disorder by noise effect and motor current leakage (without connection to pipe).

CAUTION

- After the confirmation of the above conditions, prepare the wiring as follows.

1. Never fail to have an individual power circuit specifically for the air conditioner.
   As for the method of wiring, be guided by the circuit diagram posted on the inside of control cover.
2. Firmly tighten the terminal screws to prevent them loosening. After tightening, pull the wires lightly to confirm that they do not move. (If they are loose the unit, the unit will not operate normally or it can cause burn-out of the wires.)
3. Specification of power source.
4. Confirm that electrical capacity is sufficient.
5. See to that the starting voltage is maintained at more than 90 percent of the rated voltage marked on the name plate.
6. Confirm that the cable thickness is as specified in the power source specification.
   (Particularly note the relation between cable length and thickness.
7. Do not install an earth leakage circuit breaker in a wet or moist area.
8. The following would be caused by voltage drop.
   - Vibration of a magnetic switch, which will damage the contact point, fuse breaking, disturbance of the normal function of the overload.
9. The means for disconnection from a power supply shall be incorporated in the fixed wiring and have an air gap contact separation of at least 3mm in each active(phase) conductors.

Dip Switch Setting in Indoor Main PCB

	Function	Description	Setting "Off"	Setting "On"	Default
SW3	Group Control	Selection of Master or Slave	Master	Slave	Off
SW4	Dry Contact Mode	Selection of Dry Contact Mode	Variable	Auto	Off
SW5	Return Air Sensor	Installed Sensor or Not	Not installed	Installed	Off
SW6	CTI	Installed CTI or not	Not installed	Installed	Off

* Default setting of all Dip S/W is off.

Group Control

It operates maximum 16 Units by only one Wired Remote Controller, and each Unit starts sequentially to prevent over current.

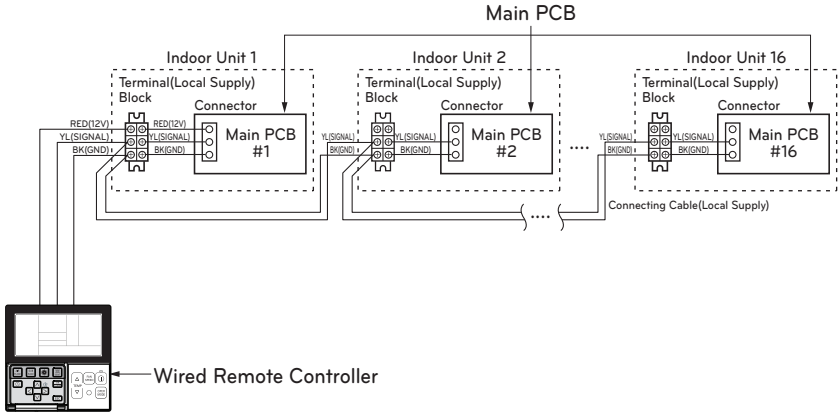

- Using the supplied Wired Remote Controller, wire them like above.
- Ensure that the color of wire.
- If the main PCB is not directly connected to the wired remote controller, set the Dip switch “3" in the main PCB as "ON" position.(OFF ’ Master / ON ’ Slave)
- Please connect with same type unit. (Single Package)
- If there were connected with different type Indoor unit, It is can not operate some functions.

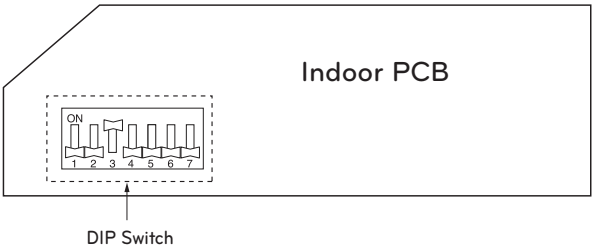

Evaporator Fan Adjustment

Use the following procedure to determine the proper adjustment of the evaporator fan for a specific application.

1 Determine total system external static pressure (In mm water column) with accessories installed. to accomplish this:

1) Obtain the design airflow rate and the design external static pressure drop through the distribution system. Your sales representative or the design engineer can provide you with these values.

2) Using the table from unit Service Manual, add static pressure drop of the accessories installed on the unit.

3) Add the total accessory static pressure drop to the design external static pressure. The sum of these two values is the total system external static pressure.

2 Use the table(s) in the Service Manual to find the external static pressure (In mm water column) that most closely approximates total system external static pressure. Then locate the appropriate airflow rate (on CMM) for your unit. The value obtained represents the break horsepower for the evaporator fan motor and the fan RPM.

NOTE

- Fan Break Horsepower (BkW) listed in the Table is the percentage range of nameplate amperage the motors will safely work within, before an oversized motor is required.

The indoor fan speed is changed by opening or closing the adjustable motor sheave. See Figure 8.

To Increase CMM

Loosen the pulley adjustment set screw and turn sheave clockwise.

To Decrease CMM

Loosen the pulley adjustment set screw and turn sheave counterclockwise.

NOTE

- The actual external static pressure may varies from design ESP due to actual duct work installation. The required air flow should be respected to provide the design cooling capacity.

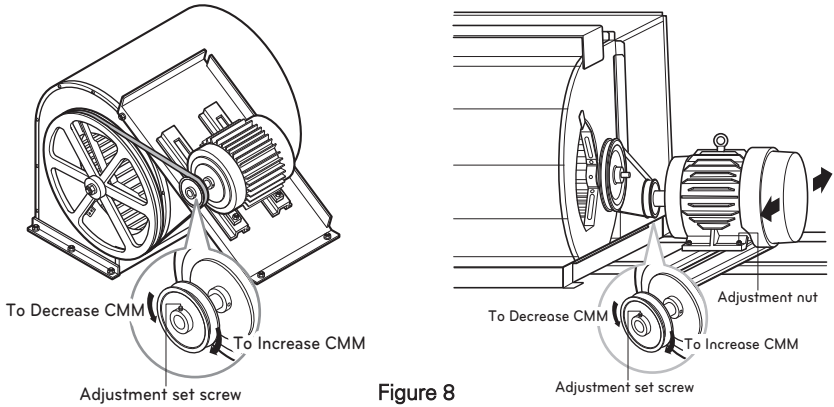

Figure 8

To Increase Belt Tension

1 Loosen adjustment nut(4places).
2 Pull motor back until belt is tight.
3 Tighten adjustment bolt after belt has correct tension.

FORCE(F)	HEIGHT(S)	REMARK
4~4.9(kgf)	20~30mm	-

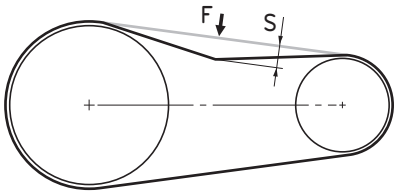

Trial Run Mode

After installing the product, you must run a Test Run mode.
For details related to this operation, refer to the product manual.

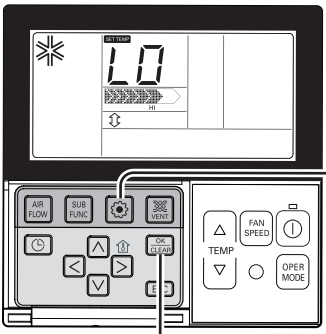

1 If pressing button long for 3 seconds, it enters into remote controller setter setup mode.
- If pressing once shortly, it enters into user setup mode. Please press more than 3 seconds for sure.
- Please cancel the right and left of wind direction for RAC product.

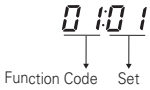

2 Setup figure '01' blinks at the lower part of indication window.

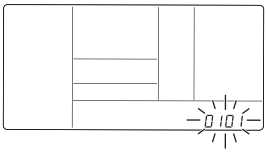

3 Press OK CLEAR button to start.

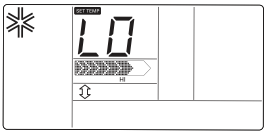

4 During the test run, pressing the below button will exit the test run.
- Select operation, temperature up/down, wind flow control, wind direction, start/stop button.

Self-Diagnosis Function

Error Indicator

- This function indicates types of failure in self-diagnosis and occurrence of failure for air condition.
- Error mark is displayed on wired remote controller, and 7-segment LED of outdoor unit control board as shown in the table.
- If more than two troubles occur simultaneously, lower number of error code is first displayed.
- After error occurrence, if error is released, error LED is also released simultaneously.

Error Display

1st,2nd LED of 7-segment indicates error number, 3rd LED indicates unit number.
Ex) 211 : No.21 error of master unit

Display				Title	Cause of Error
Indoor unit related error	0	1	-	Air temperature sensor of indoor unit (only return air sensor was installed)	Air temperature sensor of indoor unit is open or short
	0	3	-	Communication error : wired remote controller ↔ indoor unit	Failing to receive wired remote controller signal in indoor unit PCB
	0	5	-	Communication error : outdoor unit ↔ indoor unit	Failing to receive outdoor unit signal in indoor unit PCB
	0	9	-	Indoor EEPROM Error	In case when the serial number marked on EEPROM of Indoor unit is 0 or FFFFFF
Outdoor unit related error	2	1	1	Master Inverter Compressor IPM Fault	Master Inverter Compressor Drive IPM Fault
			2	Slave Inverter Compressor IPM Fault (For 20/25RT Only)	Slave Inverter Compressor Drive IPM Fault
	2	2	1	Inverter Board Input Over Current (RMS) of Master	Master Inverter Board Input Current excess (RMS)
			2	Inverter Board Input Over Current (RMS) of Slave (For 20/25RT Only)	Slave Inverter Board Input Current excess (RMS)
	2	3	1	Master Inverter Compressor DC link Low Voltage	DC charging is not performed at Master after starting relay turn on.
			2	Slave Inverter Compressor DC link Low Voltage (For 20/25RT Only)	DC charging is not performed at Slave after starting relay turn on.
	2	4	1	Master High Pressure Switch	System is turned off by Master high pressure switch.
			2	Slave High Pressure Switch (For 20/25RT Only)	System is turned off by Slave high pressure switch.
	2	5	1	Master Unit Input Voltage High/ Low Voltage	Master Unit input voltage is abnormal
			2	Slave Unit Input Voltage High/ Low Voltage (For 20/25RT Only)	Slave Unit input voltage is abnormal
	2	6	1	Master Inverter Compressor Start Failure	The First Start Failure by Master Inverter Compressor Abnormality
			2	Slave Inverter Compressor Start Failure (For 20/25RT Only)	The First Start Failure by Slave Inverter Compressor Abnormality
	2	8	1	Master Inverter DC link High Voltage	System is turned off by Master DC Voltage Over Charging
			2	Slave Inverter DC link High Voltage (For 20/25RT Only)	System is turned off by Slave DC Voltage Over Charging
	2	9	1	Master Inverter Compressor Over Current	Master Inverter Compressor Fault OR Drive Fault
			2	Slave Inverter Compressor Over Current (For 20/25RT Only)	Slave Inverter Compressor Fault OR Drive Fault

Display				Title	Cause of Error
Outdoor unit related error	3	2	1	Master Inverter Compressor High Discharge Temperature	System is turned off by Master Inverter Compressor High Discharge Temperature
			2	Slave Inverter Compressor High Discharge Temperature (For 20/25RT Only)	System is turned off by Slave Inverter Compressor High Discharge Temperature
	3	3	1	Master Constant Speed Compressor1 High Discharge Temperature	System is turned off by Master Constant Speed Compressor1 High Discharge Temperature
			2	Slave Constant Speed Compressor1 High Discharge Temperature (For 20/25RT Only)	System is turned off by Slave Constant Speed Compressor1 High Discharge Temperature
	3	4	1	High Pressure of Master	System is turned off by excessive increase of high pressure of Master
			2	High Pressure of Slave (For 20/25RT Only)	System is turned off by excessive increase of high pressure of Slave
	3	5	1	Low Pressure of Master	System is turned off by excessive decrease of low pressure of Master
			2	Low Pressure of Slave (For 20/25RT Only)	System is turned off by excessive decrease of low pressure of Slave
	3	6	1	Master low compression ratio.	5 minutes after the compressor operation, the compression ratio is less than 1.8 or continuous operation for 3 minutes in condition less than differential pressure 400kPa.
			2	Slave low compression ratio. (For 20/25RT Only)	5 minutes after the compressor operation, the compression ratio is less than 1.8 or continuous operation for 3 minutes in condition less than differential pressure 400kPa.
	4	0	1	Master Inverter Compressor CT Sensor Fault	Master Inverter Compressor CT Sensor open or short
			2	Slave Inverter Compressor CT Sensor Fault (For 20/25RT Only)	Slave Inverter Compressor CT Sensor open or short
	4	1	1	Master Inverter Compressor Discharge Temperature Sensor Fault	Master Inverter Compressor Discharge Temperature Sensor open or short
			2	Slave Inverter Compressor Discharge Temperature Sensor Fault (For 20/25RT Only)	Slave Inverter Compressor Discharge Temperature Sensor open or short
	4	2	1	Master Low Pressure Sensor Fault	Master Low Pressure Sensor open or short
			2	Slave Low Pressure Sensor Fault (For 20/25RT Only)	Slave Low Pressure Sensor open or short
	4	3	1	Master High Pressure Sensor Fault	Master High Pressure Sensor open or short
			2	Slave High Pressure Sensor Fault (For 20/25RT Only)	Slave High Pressure Sensor open or short
	4	4	1	Master Air Temperature Sensor Fault	Master Air Temperature Sensor open or short
			2	Slave Air Temperature Sensor Fault (For 20/25RT Only)	Slave Air Temperature Sensor open or short
	4	6	1	Master Suction Temperature Sensor Fault	Master Suction Temperature Sensor open or short
			2	Slave Suction Temperature Sensor Fault (For 20/25RT Only)	Slave Suction Temperature Sensor open or short
	4	7	1	Master Constant Speed Compressor1 Discharge Temperature Sensor Fault	Master Constant Speed Compressor1 Discharge Temperature Sensor open or short
			2	Slave Constant Speed Compressor1 Discharge Temperature Sensor Fault (For 20/25RT Only)	Slave Constant Speed Compressor1 Discharge Temperature Sensor open or short

Display				Title	Cause of Error
Outdoor unit related error	4	9	1	Master Outdoor Unit Faulty IPM Temperature Sensor	Master Outdoor Unit IPM Temperature Sensor short/open
			2	Slave Outdoor Unit Faulty IPM Temperature Sensor	Slave Outdoor Unit IPM Temperature Sensor short/open
	5	0	1	Omitting connection of R, S, T power of Master	Omitting connection of Master
			2	Omitting connection of R, S, T power of Slave (For 20/25RT Only)	Omitting connection of Slave
	5	2	1	Communication error : inverter PCB → Main PCB	Failing to receive inverter signal at main PCB of Master
			2	Communication error : inverter PCB → Main PCB (For 20/25RT Only)	Failing to receive inverter signal at main PCB of Slave
	5	3	1	Communication error : indoor unit → main PCB of Master	Failing to receive indoor unit signal at main PCB of Master.
	5	4	1	Reversed connection of R,S,T power of Unit	Reversed connection of R,S,T power supply cable
			2	Reversed connection of R,S,T power of Unit (For 20/25RT Only)	Reversed connection of R,S,T power supply cable
	5	7	1	Master Communication Error with Inverter Controller	Master Controller part cannot receive inverter control signals (usually happens after on-boarding)
			2	Slave Communication Error with Inverter Controller (For 20/25RT Only)	Slave Controller part cannot receive inverter control signals (usually happens after on-boarding)
	5	9	2	Series Installation Error (For 20/25RTOnly)	Different capacity of the EEPROM
	6	0	1	Inverter PCB EEPROM Error of Master	Access Error of Inverter PCB of Master
			2	Inverter PCB EEPROM Error of Slave (For 20/25RT Only)	Access Error of Inverter PCB of Slave
	6	2	1	Inverter IPM temperature excessive rise error.	Temperature of Inverter IPM Heat sink is excessive rises.
			2	Inverter IPM temperature excessive rise error. (For 20/25RT Only)	Temperature of Inverter IPM Heat sink is excessive rises.
	6	5	1	Master Faulty IPM Temperature Sensor	Master IPM Temperature Sensor short/open
			2	Slave Faulty IPM Temperature Sensor (For 20/25RT Only)	Slave IPM Temperature Sensor short/open
	6	7	1	Master Fan Lock	Restriction of Master
			2	Slave Fan Lock (For 20/25RT Only)	Restriction of Slave
	6	9	1	Constant1 CT Sensor Error of Master	Constant1 CT Sensor open or short of Master
			2	Constant1 CT Sensor Error of Slave (For 20/25RT Only)	Constant1 CT Sensor open or short of Slave
	7	3	1	Instant Over Current(Peak) of Master PFC	Instant Over Current(Peak) of Master PFC
			2	Instant Over Current(Peak) of Slave PFC (For 20/25RT Only)	Instant Over Current(Peak) of Slave PFC

Display				Title	Cause of Error
Outdoor unit related error	7	5	1	Master Fan CT Sensor Error	Master Fan CT Sensor open or short
			2	Slave Fan CT Sensor Error (For 20/25RT Only)	Slave Fan CT Sensor open or short
	7	6	1	Master Fan DC Link High Voltage Error	Master Fan Current is abnormal
			2	Slave Fan DC Link High Voltage Error (For 20/25RT Only)	Slave Fan Current is abnormal
	7	7	1	Master Fan Over Current Error	Master Fan Current is over 10A
			2	Slave Fan Over Current Error (For 20/25RT Only)	Slave Fan Current is over 10A
	7	9	1	Master Fan Start Failure Error	Master Fan First Position Sensing Failure
			2	Slave Fan Start Failure Error (For 20/25RT Only)	Slave Fan First Position Sensing Failure
	8	6	1	Master Main PCB EEPROM Error	Communication Fail between Master Main MICOM and EEPROM or omitting EEPROM
			2	Slave Main PCB EEPROM Error (For 20/25RT Only)	Communication Fail between Slave Main MICOM and EEPROM or omitting EEPROM
	8	7	1	Master Fan PCB EEPROM Error	Communication Fail Between Master Fan MICOM and EEPROM or omitting EEPROM
			2	Slave Fan PCB EEPROM Error (For 20/25RT Only)	Communication Fail Between Slave Fan MICOM and EEPROM or omitting EEPROM

Display					Title	Cause of Error
Outdoor unit related error	1	0	4	2	Communication Error between Master and Slave (For 20/25RT Only)	Failing to receive Slave signal at main PCB of Master
	1	0	5	1	Master Fan PCB Communication Error	Failing to receive fan signal at main PCB of unit.
				2	Slave Fan PCB Communication Error (For 20/25RT Only)	Failing to receive fan signal at main PCB of unit.
	1	0	6	1	Master FAN IPM Fault Error	Instant Over Current at Master Fan IPM
				2	Slave FAN IPM Fault Error (For 20/25RT Only)	Instant Over Current at Slave Fan IPM
	1	0	7	1	Master Fan DC Link Low Voltage Error	Master Fan DC Link Input Voltage is abnormal
				2	Slave Fan DC Link Low Voltage Error (For 20/25RT Only)	Slave Fan DC Link Input Voltage is abnormal
	1	1	3	1	Eva inlet pipe Temperature Sensor Error	Eva inlet pipe temperature sensor of Master is open or short
				2	Eva inlet pipe Temperature Sensor Error (For 20/25RT Only)	Eva inlet pipe temperature sensor of Master is open or short
	1	1	5	1	Eva outlet pipe Temperature Sensor Error	Eva outlet pipe Temperature Sensor open or short
				2	Eva outlet pipe Temperature Sensor Error (For 20/25RT Only)	Eva outlet pipe Temperature Sensor open or short
	1	5	1	1	Failure of operation mode conversion at Master	Pressure unbalance between Masters
				2	Failure of operation mode conversion at Slave (For 20/25RT Only)	Pressure unbalance between Slaves
	1	7	3	1	Master Constant Speed Compressor Fault	Comp locking, Check Valve leakage, comp dielectric break down at Master
				2	Slave Constant Speed Compressor Fault (For 20/25RT Only)	Comp locking, Check Valve leakage, comp dielectric break down at Slave
	1	8	2	1	Master Main PCB Main-Sub Micom communication error	Master Main PCB Main-Sub Micom communication failed
				2	Slave Main PCB Main-Sub Micom communication error (For 20/25RT Only)	Slave Main PCB Main-Sub Micom communication failed
	1	9	3	1	Excessive increase of Master Fan PCB Heat Sink Temperature	Master Fan Inverter PCB Temperature is Over 95°C
				2	Excessive increase of Slave Fan PCB Heat Sink Temperature (For 20/25RT Only)	Slave Fan Inverter PCB Temperature is Over 95°C
	1	9	4	1	Master Fan PCB Heat Sink Temperature Sensor Error	Master Fan PCB Heat Sink Temperature Sensor open or short
				2	Slave Fan PCB Heat Sink Temperature Sensor Error (For 20/25RT Only)	Slave Fan PCB Heat Sink Temperature Sensor open or short

Starting the Unit

Heating Mode

(If unit is equipped with electric heater.)

Check to ensure all grilles and registers are open and all unit access doors are closed before start-up.

Turn on unit main power supply.

Press the E/Heater operation button on the Remote controller.

Set the temperature approximately 5˚C above room temperature.

Cooling Mode

Verify that the unit airflow rate is adjusted according to information provided in "Determining Evaporator Fan Adjustment" section of this manual.

To start the unit in the cooling mode, close unit disconnect switch and set the operating mode to COOL and move the cooling set point approximately 5˚C below room temperature. The condenser fan motor, compressor and evaporator fan motor should operate automatically. There will be a delay of up to 3 minutes before the unit will start in the cooling mode.

Operating Pressures

After the unit has operated in the cooling mode for a short period of time, install pressure gauges on the gauge ports of the suction line valves.

NOTE

- Always route refrigerant hoses through the port hole provided and have compressor access panel in place.

Check the suction pressures and compare them to the normal operating pressures about from 700~1000kPa

NOTE

- Do not use pressures to determine the unit refrigerant charge. The correct charge is shown on the unit nameplate. To charge the system accurately, use superheat charging or weigh the charge.

Voltage

With the compressor operating, check the line voltage at the unit. The voltage should be within the range shown on the unit nameplate. If low voltage is encountered, check the size and length of the supply line from the main disconnect to the unit. The line may be undersized for the length of the run.

WARNING

- Bodily injury can result from high voltage electrical components. If operating checks must be performed with the unit operating, it is the technician's responsibility to recognize these hazards and proceed safely. Failure to do so could result in severe personal injury or death due to electrical shock or contact with moving parts.

Final Installation Checklist and Maintenance

- Is the condenser fan and indoor blower operating correctly, with proper rotation and without undue noise?
- Have voltage and running currents been checked to determine if it is within limits?
- Have the air discharge grilles been adjusted to balance the system?
- Has the ductwork been checked for air leaks and condensation?
- Has the indoor airflow been checked and adjusted if necessary?
- Has the unit been checked for tubing and sheet metal rattles and are there unusual noises to be checked?
- Are all covers and panels in place and properly fastened?
- Has the owner or maintenance personnel been given this manual, warranty, and been instructed on proper operation and maintenance?

Routine Maintenance By Owner

You can do some of the periodic maintenance functions for your unit yourself; this includes cleaning air filters, cleaning unit cabinet, cleaning the condenser coil, and conducting a general unit inspection on a regular basis.

Unfiltered air circulates through the unit's condenser coil and can cause the coil's surface to become clogged with dust, dirt, etc.. To clean the coil, vertically (i.e., along the fins) stroke the coil surface with a soft bristled brush.

Keep all vegetation away from the condenser coil area.

WARNING

- Before removing access panels to service unit, disconnect power supply. Failure to disconnect power before attempting any servicing can result in severe injury or death.

Maintenance Performed by Serviceman-Cooling Season

To keep your unit operating safely and efficiently, the manufacturer recommends that a qualified serviceman check the entire system at least once each year, or more frequently if conditions warrant. Your serviceman may examine these areas of your unit:

1. Motors and drive system components	➔ In case of V-belt, inspect wear and tension every three months to determine whether to replace.
2. Condenser coils	➔ For cleaning
3. Safety Controls	➔ For mechanical cleaning
4. Electrical components and wiring	➔ For possible replacement or connection tightness
5. Condensate drain	➔ For cleaning
6. Inspect the unit duct connections to ensure they are physically sound and sealed to the unit casing.	
7. Inspect the unit mounting support to see that it is sound.	
8. Inspect the unit to ensure there is no obvious deterioration.	

Maintenance Performed By Serviceman-Heating Season

Complete the unit inspections and service routines described below at the beginning of each heating season.

⚠ CAUTION

- To prevent injury or death due to electrical shock of contact with moving parts, lock unit disconnect switch in open position before servicing unit.
  To prevent an explosion and possible injury, death and equipment damage, do not store combustible materials, gasoline or other flammable vapors and liquids near the unit.

Inspect the control panel wiring to verify that all electrical connections are tight and wire insulation is intact.

Installation guide at the seaside

CAUTION

- Air conditioners should not be installed in areas where corrosive gases, such as acid or alkaline gas, are produced.
- Do not install the product where it could be exposed to sea wind (salty wind) directly. It can result corrosion on the product. Corrosion, particularly on the condenser and evaporator fins, could cause product malfunction or inefficient performance.
- If outdoor unit is installed close to the seaside, it should avoid direct exposure to the sea wind. Otherwise it needs additional anticorrosion treatment on the heat exchanger.

Selecting the location(Outdoor Unit)

If the outdoor unit is to be installed close to the seaside, direct exposure to the sea wind should be avoided. Install the outdoor unit on the opposite side of the sea wind direction.

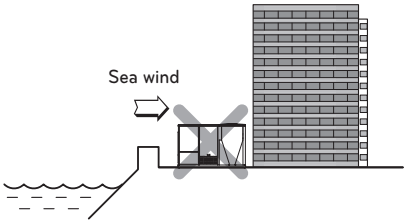

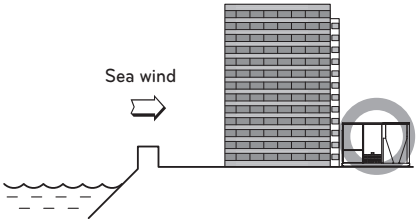

In case, to install the outdoor unit on the seaside, set up a windbreak not to be exposed to the sea wind.

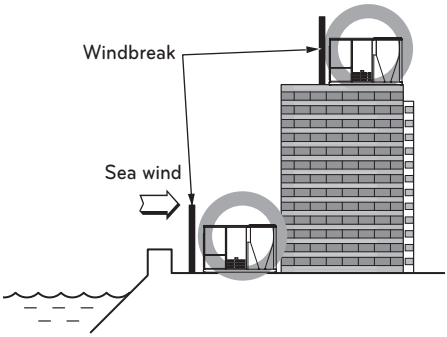

- It should be strong enough like concrete to prevent the sea wind from the sea.
- The height and width should be more than 150% of the outdoor unit.
- It should be keep more than 70 cm of space between outdoor unit and the windbreak for easy air flow.

Select a well-drained place.

- If you can't meet above guide line in the seaside installation, please contact LG Electronics for the additional anticorrosion.
- Periodic (more than once/year) cleaning of the dust or salt particles stuck on the heat exchanger by using water

LG

Life's Good