LG
Life's Good

ENGLISH

INSTALLATION MANUAL

AIR CONDITIONER

* Please read this installation manual completely before installing the product.
* Installation work must be performed in accordance with national wiring standards by authorized personel only.
* Please retain this installation manual for future reference after read it throughly.

TYPE : CEILING CASSETTE AIR CONDITIONER

MFL63260113
Rev. : 02(09T15)

www.lg.com

TABLE OF CONTENTS

Installation Requirements

Important Safety Instructions.....3

Introduction.....5
Symbols used in this Manual.....5
Features.....5

Installation.....6
Installation Tools.....6
Selection of the best location.....7
Ceiling opening dimension and hanging bolt location.....10
The Indoor Unit Installation.....11
Remote Controller Installation.....12
Remote ControlPreperation.....12
Wiring Connection.....13
Electrical Wiring.....14
Connection the cable to Outdoor Unit.....14
Connection Pipes to the Indoor Unit.....15
Installation of Decorative Panel...17
Indoor Unit Drain Piping.....18
Test running.....20
Installation Instruction.....22
Installer Setting - Setting Address of Central Contral.....24

Required Parts

- Connecting cable
- Pipes: Gas side
  Liquid side
- Hanging Bolt
  (W 3/8 or M10 length 650mm)
- Insulated drain hose
- Additional Drain hose
  (Inner Diameter.....32mm)

Required Tools

- Horizontal meter
- Screw driver
- Electric drill
- Hole core drill (ø70mm)
- Flaring Tools set
- Torque Wrenches
- Hexagonal Wrench (4mm, 5mm)
- Gas-leak detector
- Owner's Manual
- Installation Manual
- Thermometer
- Manifold gage
- Vacuum pump

Important Safety Instructions

READ ALL INSTRUCTIONS BEFORE USING THE APPLIANCE.

Always comply with the following precautions to avoid dangerous situations and ensure peak performance of your product

⚠ WARNING

It can result in serious injury or death when the directions are ignored

⚠ CAUTION

It can result in minor injury or product damage when the directions are ignored

⚠ WARNING

- Installation or repairs made by unqualified persons can result in hazards to you and others.
- The product shall be installed according to the wiring regulations of the corresponding country.
- The information contained in the manual is intended for use by a qualified service technician familiar with safety procedures and equipped with the proper tools and test instruments.
- Failure to carefully read and follow all instructions in this manual can result in equipment malfunction, property damage, personal injury and/or death.

Installation

- Do not turn on the breaker or power under condition that front panel, cabinet, top cover, control box cover are removed or opened.
  - it may cause fire, electric shock, explosion or death.
- Do not use a defective or underrated circuit breaker. Use this appliance on a dedicated circuit.
  - There is risk of fire or electric shock.
- For electrical work, contact the dealer, seller, a qualified electrician, or an Authorized Service Center.
  - Do not disassemble or repair the product. There is risk of fire or electric shock.
- Always ground the product.
  - There is risk of fire or electric shock.
- Install the panel and the cover of control box securely.
  - There is risk of fire or electric shock.
- Always install a dedicated circuit and breaker.
  - Improper wiring or installation may cause fire or electric shock
- Use the correctly rated breaker or fuse.
  - There is risk of fire or electric shock.
- Do not modify or extend the power cable.
  - There is risk of fire or electric shock.
- Be cautious when unpacking and installing the product.
  - Sharp edges could cause injury. Be especially careful of the case edges and the fins on the condenser and evaporator.
- For installation, always contact the dealer or an Authorized Service Center.
  - There is risk of fire, electric shock, explosion, or injury.
- Do not install the product on a defective installation stand.
  - It may cause injury, accident, or damage to the product.
- Be sure the installation area does not deteriorate with age.
  - If the base collapses, the air conditioner could fall with it, causing property damage, product failure, and personal injury.

- Do not let the air conditioner run for a long time when the humidity is very high and a door or a window is left open.
  - Moisture may condense and wet or damage furniture.
- Use a vacuum pump or Inert (nitrogen) gas when doing leakage test or air purge. Do not compress air or Oxygen and Do not use Flammable gases. Otherwise, it may cause fire or explosion.
  - There is the risk of death, injury, fire or explosion.

Operation

- Do not store or use flammable gas or combustibles near the product.
  - There is risk of fire or failure of product.

⚠ CAUTION

Installation

- Always check for gas (refrigerant) leakage after installation or repair of product.
  - Low refrigerant levels may cause failure of product.
- Install the drain hose to ensure that water is drained away properly.
  - A bad connection may cause water leakage.
- Keep level even when installing the product.
  - To avoid vibration or water leakage.
- Do not install the product where the noise or hot air from the outdoor unit could damage the neighborhoods.
  - It may cause a problem for your neighbors.
- Use two or more people to lift and transport the product.
  - Avoid personal injury.
- Do not install the product where it will be exposed to sea wind (salt spray) directly.
  - It may cause corrosion on the product. Corrosion, particularly on the condenser and evaporator fins, could cause product malfunction or inefficient operation.

Introduction

Symbols used in this Manual

This symbol alerts you to the risk of electric shock.

This symbol alerts you to hazards that may cause harm to the air conditioner.

NOTICE **This symbol indicates special notes.**

Features

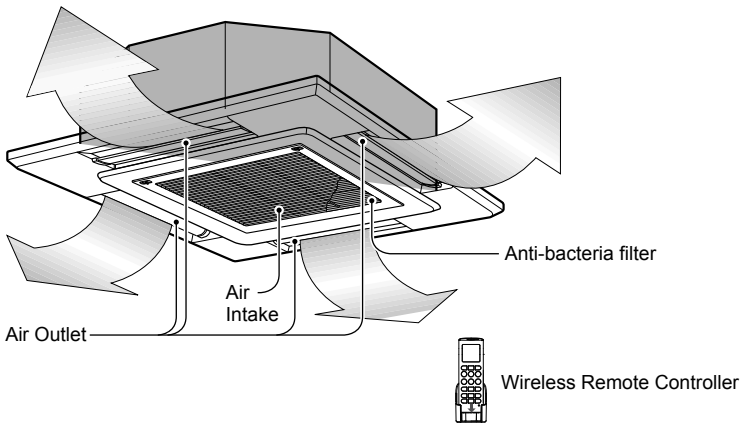

Installation

Installation Tools

Figure	Name	Figure	Name
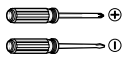	Screw driver		Ohmmeter
	Electric drill		Hexagonal wrench
	Measuring tape, Knife	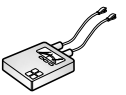	Ampmeter
	Hole core drill		Gas-leak detector
	Spanner	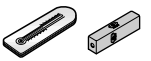	Thermometer, Horizontal meter
	Torque wrench		Flaring tool set
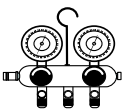	Manifold gage	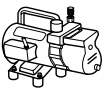	Vacuum pump

Selection of the best location

1) Indoor unit

- There should not be any heat source or steam near the unit.
- There should not be any obstacles to prevent the air circulation.
- A place where air circulation in the room will be good.
- A place where drainage can be easily obtained.
- A place where noise prevention is taken into consideration.
- Do not install the unit near the door way.
- Ensure the spaces indicated by arrows from the wall, ceiling, or other obstacles.
- The indoor unit must keep the maintenance space.

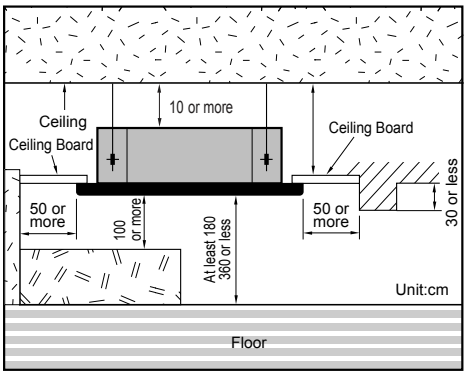

2) Outdoor unit

- If an awning is built over the unit to prevent direct sunlight or rain exposure, be careful that heat radiation from the condenser is not restricted.
- There should not be any animals or plants which could be affected by hot air discharged.
- Ensure the spaces indicated by arrows from the wall, ceiling, fence or other obstacles.

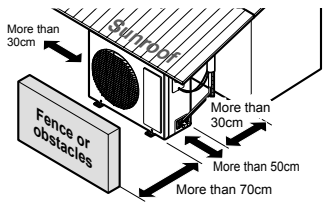

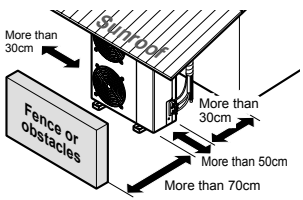

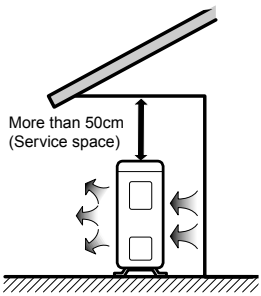

3) Settlement of outdoor unit

- Anchor the outdoor unit with a bolt and nut(ø10mm) tightly and horizontally on a concrete or rigid mount.
- When installing on the wall, roof or rooftop, anchor the mounting base securely with a nail or wire assuming the influence of wind and earthquake.
- In the case when the vibration of the unit is conveyed to the hose, secure the unit with an anti-vibration rubber.

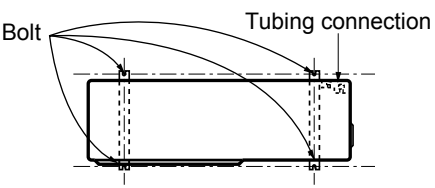

4) Installation guide at the seaside

⚠CAUTION

1. Air conditioners should not be installed in areas where corrosive gases, such as acid or alkaline gas, are produced.
2. Do not install the product where it could be exposed to sea wind (salty wind) directly. It can result corrosion on the product. Corrosion, particularly on the condenser and evaporator fins, could cause product malfunction or inefficient performance.
3. If outdoor unit is installed close to the seaside, it should avoid direct exposure to the sea wind. Otherwise it needs additional anticorrosion treatment on the heat exchanger.

4.1 Selecting the location(Outdoor Unit)

1) If the outdoor unit is to be installed close to the seaside, direct exposure to the sea wind should be avoided. Install the outdoor unit on the opposite side of the sea wind direction.

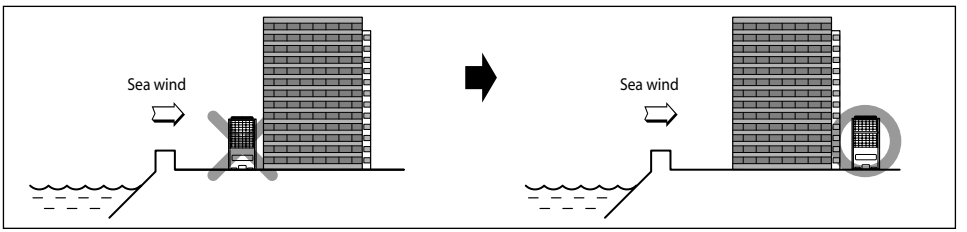

2) In case, to install the outdoor unit on the seaside, set up a windbreak not to be exposed to the sea wind.

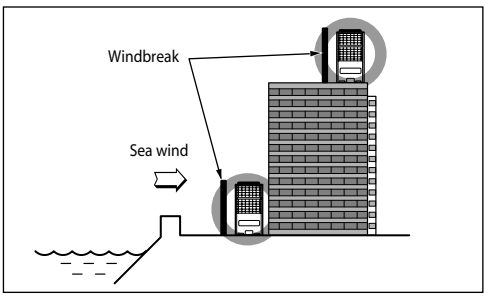

- It should be strong enough like concrete to prevent the sea wind from the sea.
- The height and width should be more than 150% of the outdoor unit.
- It should be keep more than 70 cm of space between outdoor unit and the windbreak for easy air flow.

3) Select a well-drained place.

❉ 1. If you can't meet above guide line in the seaside installation, please contact LG Electronics for the additional anticorrosion treatment.
2. Periodic (more than once/year) cleaning of the dust or salt particles stuck on the heat exchanger by using water

5) Piping length and the elevation

Model Name	Pipe Size (Diameter:Ø)		Length Ⓐ (m)		Elevation Ⓑ (m)		*Additional refrigerant(g/m)
	Gas	Liquid	Standard	Max.	Standard	Max.	
AT-C186PLE0	1/2" (12.70mm)	1/4" (6.35mm)	7.5	30	5	20	20
AT-C186PLE1	5/8" (15.88mm)	3/8" (9.52mm)	7.5	30	5	20	20
AT-C246PLE0	5/8" (15.88mm)	3/8" (9.52mm)	7.5	30	5	20	20
AT-C308PLE0	5/8" (15.88mm)	3/8" (9.52mm)	7.5	50	5	30	25
AT-C368NLE0	5/8" (15.88mm)	3/8" (9.52mm)	7.5	50	5	30	25
AT-C488MLE0	5/8" (15.88mm)	3/8" (9.52mm)	7.5	50	5	30	25
AT-C548MLE0	3/4" (19.05mm)	3/8" (9.52mm)	7.5	50	5	30	25

Extra refrigerant = (Extended length - Rated length) x Additional refrigerant.

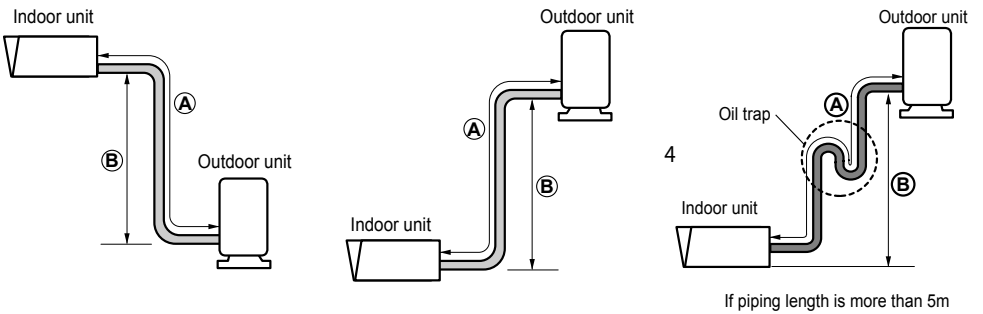

CAUTION:

- **Rated performance for refrigerant line length of:7.5m**
- **Capacity is based on standard length and maximum allowance length is on the basis of reliability.**
- **Improper refrigerant charge may result in abnormal cycle.**
- **Oil trap should be installed every 10 meters.**

Ceiling opening dimensions and hanging bolt location

- The dimensions of the paper model for installing are the same as those of the ceiling opening dimensions.
- Select and mark the position for fixing bolts and piping hole.
- Decide the position for fixing bolts slightly tilted to the drain direction after considering the direction of drain hose.
- Drill the hole for anchor bolt on the wall.

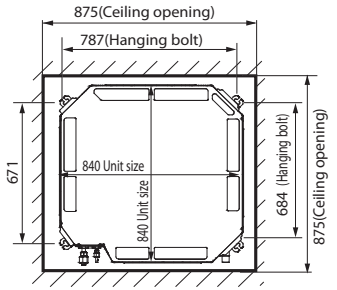

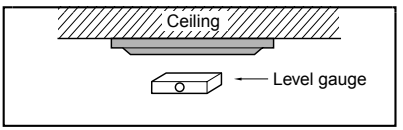

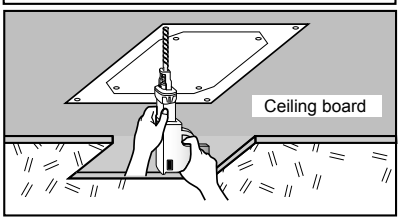

CAUTION:
- **This air-conditioner uses a drain pump.**
- **Horizontally install the unit using a level gauge.**
- **During the installation, care should be taken not to damage electric wires.**

NOTICE

- Thoroughly study the following installation locations:

1. In such places as restaurants and kitchens, considerable amount of oil steam and flour adhere to the turbo fan, the fin of the heat exchanger and the drain pump, resulting in heat exchange reduction, spraying, dispersing of water drops, drain pump malfunction, etc. In these cases, take the following actions:
   - Make sure that the ventilation fan for smoke-collecting hood on a cooking table has sufficient capacity so that it draws oily steam which should not flow into the suction of the air conditioner.
   - Make enough distance from a cooking room to install the air conditioner in such a place where it may not suck in oily steam.

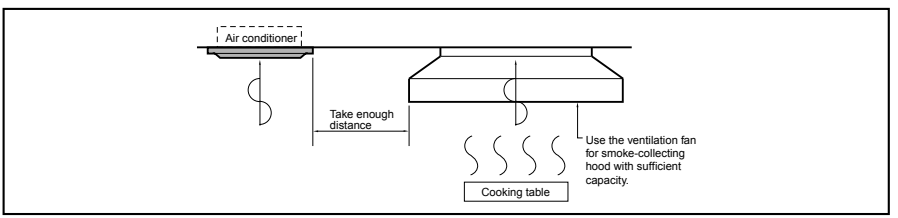

2. Avoid installing air conditioner in such circumstances where cutting oil mist or iron powder is in suspension in factories, etc.
3. Avoid places where inflammable gas is generated, flows in, is stored or vented.
4. Avoid places where sulfurous acid gas or corrosive gas is generated.
5. Avoid places near high frequency generators.

The Indoor Unit Installation

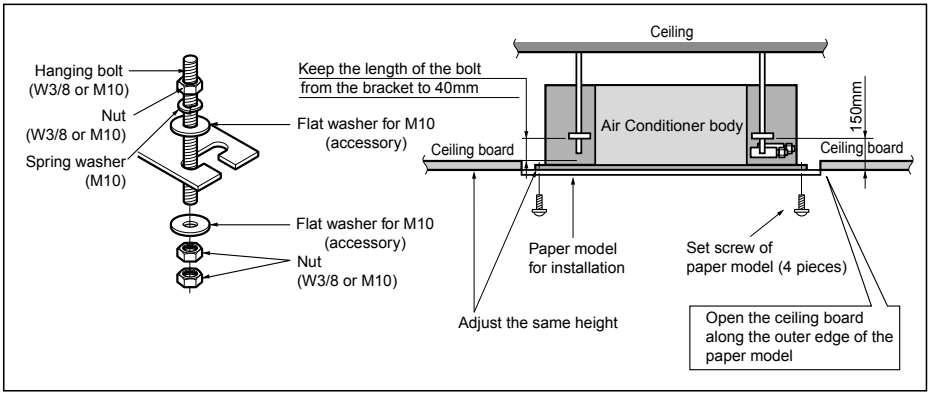

• The following parts is option.
  ① Hanging Bolt - W 3/8 or M10
  ② Nut - W 3/8 or M10
  ③ Spring Washer - M10
  ④ Plate Washer - M10

CAUTION: Tighten the nut and bolt to prevent unit falling.

• Drill the piping hole on the wall slightly tilted to the outdoor side using a Ø 70 hole-core drill.

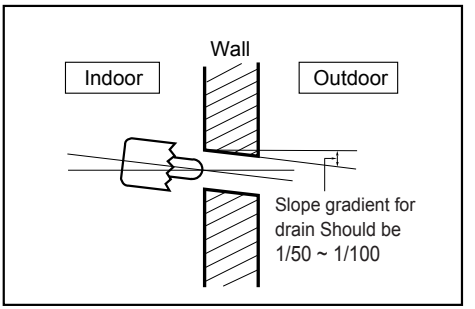

Remote Controller Installation

• **Although the room temperature sensor is in the indoor unit, the remote controller should be installed in such places away from direct sunlight and high humidity.**

Installation of the remote controller

• Select places that are not splashed with water.
• Select control position after receiving customer approval.
• The room temperature sensor is built in the indoor unit.
• This remote controller equipped with liquid crystal display. If this position is higher or lower, display is difficult to see. (The standard height is 1.2 ~ 1.5m high)

Routing of the remote controller cord

• Keep the remote controller cord away from the refrigerant piping and the drain piping.
• To protect the remote controller cord from electrical noise, place the cord at least 5cm away from other power cables (audio equipment, television set, etc.)
• If the remote controller cord is secured to the wall, provide a trap at the top of the cord to prevent water droplets from running.

Remote Control Preparation

HOW TO MOUNT ONTO A WALL

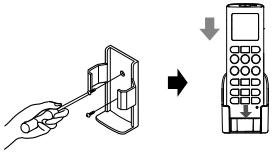

HOW TO INSERT BATTERIES

1. Remove the battery cover from the remote controller.
   • Slide the cover according to the arrow direction.

2. Insert the two batteries.
   • Be sure that the (+) and (-) directions are correct.
   • Be sure that both batteries are new.

3. Re-attach the cover.
   • Slide it back into position.



- Do not use rechargeable batteries, such batteries differ from standard dry cells in shape, dimensions, and performance.
- Romove the batteries from the remote controller if the air conditioner is not going to be used for some long time.

Wiring Connection

Open the control box cover and connect the remote control cord and Indoor power wires.

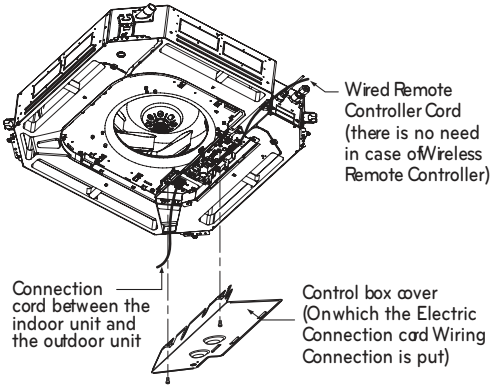

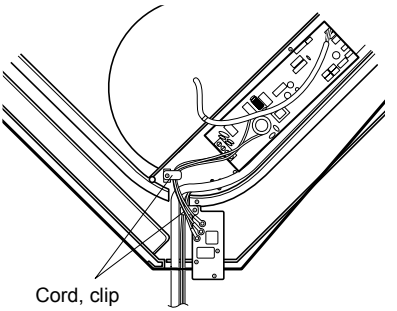

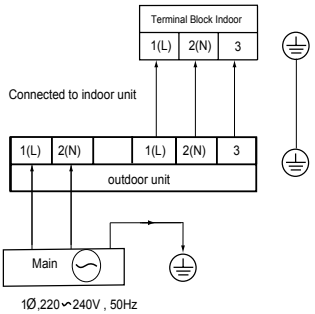

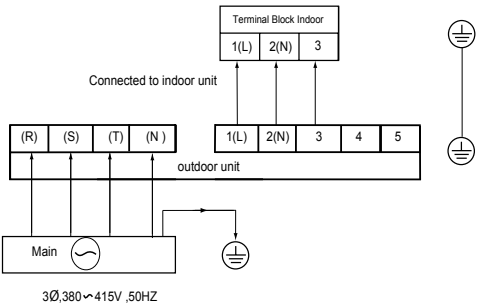

CAUTION

The power cord connected to the outdoor unit should be complied with the following specifications (Rubber insulation, type H05RN-F approved by HAR or SAA).

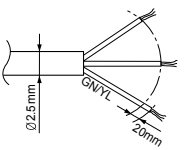

AT-C186PLE0 AT-C186PLE1 AT-C246PLE0 AT-C308PLE0 AT-C368NLE0 AT-C488MLE0 AT-C548MLE0	2.5 mm^2

The connecting cable connected to the indoor and outdoor unit should be complied with the following specifications (Rubber insulation, type H05RN-F approved by HAR or SAA).

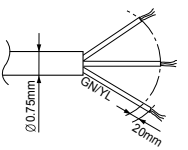

AT-C186PLE0 AT-C186PLE1 AT-C246PLE0 AT-C308PLE0 AT-C368NLE0 AT-C488MLE0 AT-C548MLE0	0.75 mm^2

If the supply cord is damaged, it must be replaced by a special cord or assembly available from the manufacturer or its service agent.

WARNING: Make sure that the screws of the terminal are free from looseness.

Electrical Wiring

1. All wiring must comply with LOCAL REGULATIONS.
2. Select a power source that is capable of supplying the current required by the air conditioner.
3. Feed the power source to the unit via a distribution switch board designed for this purpose.
4. The terminal screws inside the control box may be loose due to vibration during transport.
   Check the screws for loose connection.
   (Running the air conditioner with loose connection can overload and damage electrical components.)
5. Always ground the air conditioner with a grounding wire and connector to meet the LOCAL REGULATION.

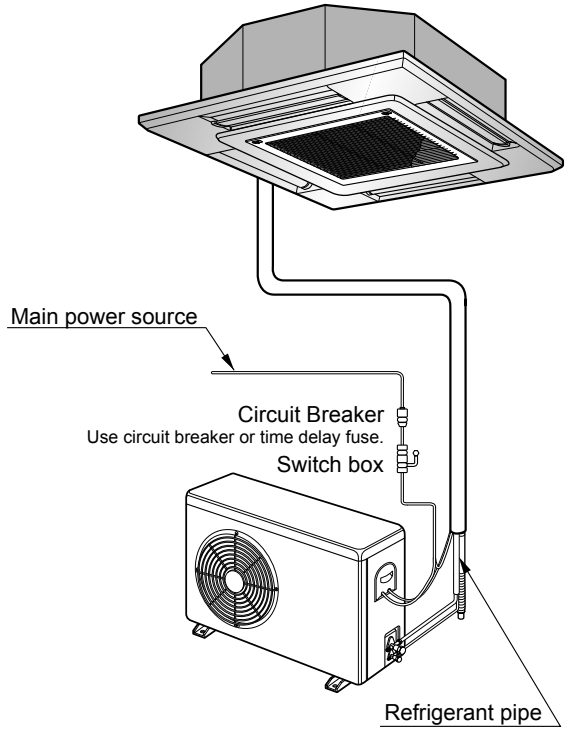

Connecting the cable to Outdoor Unit

1. Remove the Cover control from the unit by loosening a screw.
   Connect the wires to the terminals on the control board individually as following.
2. Secure the cable onto the control board with the holder (clamper).
3. Refix the cover control to the original position with the screw.
4. Use a recongnized circuit breaker 20A between the power source and the unit. A disconnection device to adequately disconnect all supply lines must be fitted.

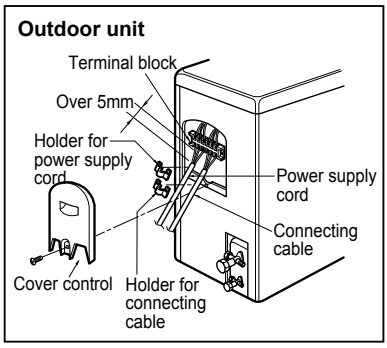

Connecting Pipes to the Indoor Unit

• Preparation of Piping

Main cause of gas leakage is defect in flaring work. Carry out correct flaring work in the following procedure.

1) Cut the pipes and the cable.

- Use the accessory piping kit or the pipes purchased locally.
- Measure the distance between the indoor and the outdoor unit.
- Cut the pipes a little longer than measured distance.
- Cut the cable 1.5m longer than the pipe length.

2) Burrs removal

- Completely remove all burrs from the cut cross section of pipe/tube.
- Put the end of the copper tube/pipe to downward direction as you remove burrs in order to avoid to let burrs drop in the tubing.

3) Putting nut on

- Remove flare nuts attached to indoor and outdoor units, than put them on pipe/tube having completed burr removal.
  (Not possible to put them on after flaring work)

4) Flaring work

- Carry out flaring work using flaring tool as shown below.

Outside diameter		A
mm	inch	mm
Ø6.35	1/4	0.5~0.8
Ø9.52	3/8	0.5~0.8
Ø12.7	1/2	0.5~0.8
Ø15.88	5/8	0.8~1.0
Ø19.05	3/4	0.8~1.0

Firmly hold copper tube in a bar(or die) as indicated dimension in the table above.

5) Check

- Compare the flared work with figure below.
- If flare is noted to be defective, cut off the flared section and do flaring work again.

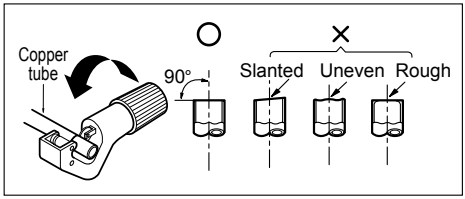

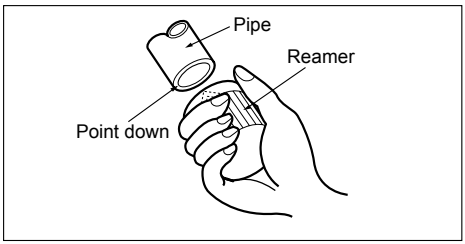

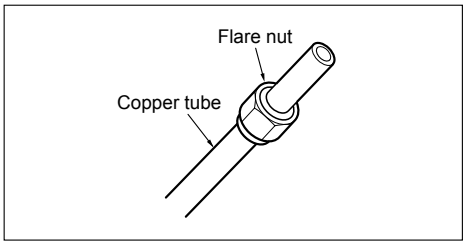

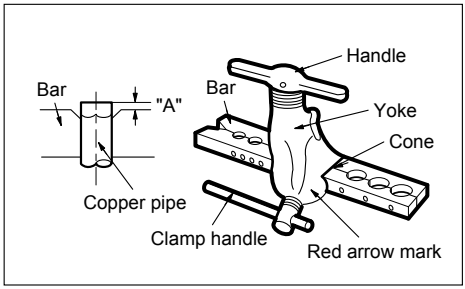

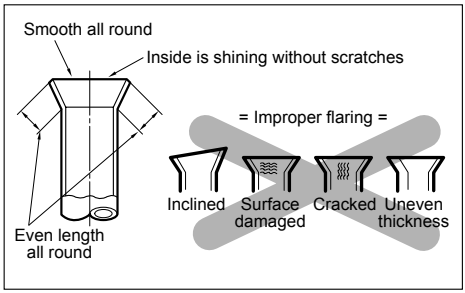

• Piping Connection

1. Form the piping according to its routing. Avoid bending and bending back the same piping point more than three times. (This will result in hardening the pipe.)
2. After deforming the piping, align centers of the union fitting of the indoor unit and the piping, and tighten them firmly with wrenches.
3. Connect pipe to the service valve or ball valve which is located below the outdoor unit.
4. After completing the piping connection, be sure to check if there is gas leakage in indoor and outdoor connection.

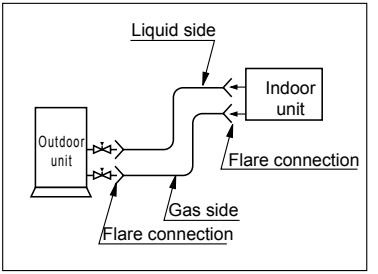

• Vacuum drying

After completing the piping connection, execute vacuum drying for the connecting piping and the indoor unit.
The vacuum drying must be carried out using the service ports of both the liquid and gas side valves.

⚠ WARNING

Use a vacuum pump or Inert (nitrogen) gas when doing leakage test or air purge. Do not compress air or Oxygen and do not use Flammable gases. Otherwise, it may cause fire or explosion.

- There is the risk of death, injury, fire or explosion.

⚠ CAUTION: Use two wrenches and tighten with regular torque.

Flare nut fastening torque	
Ø6.35mm	1.8 kg·m
Ø9.52mm	4.0 kg·m
Ø12.7mm	5.5 kg·m
Ø15.88mm	6.6 kg·m
Ø19.05mm	6.6 kg·m

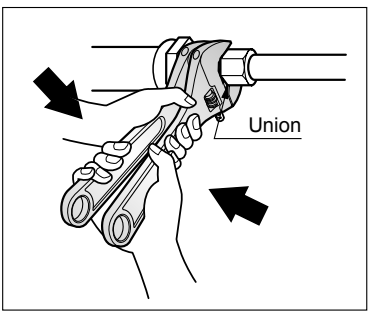

Installation of Decorative Panel

The decorative panel has its installation direction.
Before installing the decorative panel, always remove the paper template.

1 Remove the packing and take out air inlet grille from front panel.

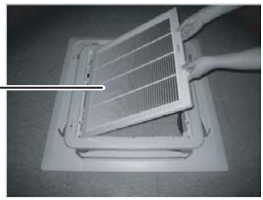

2 Remove the Corner covers of the panel.

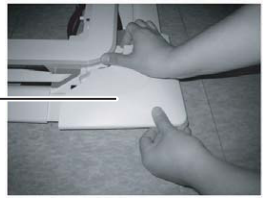

3 Fit the panel on the unit by inserting hooks as shown in picture.

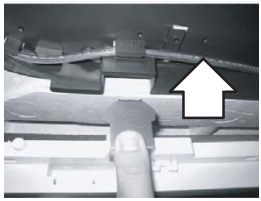

4 Insert two screws on diagonal corners of panel. Do not tighten the bolts completely. (The fixing screws are included in the indoor unit box.)
Check the alignment of panel with the ceiling. Height can be adjusted using hanging bolts as shown in picture. Insert the other two screws and tighten all screws completely.





5 Fit the corner covers.

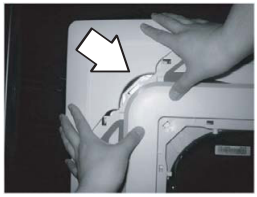

6 Open two screws of control panel cover.

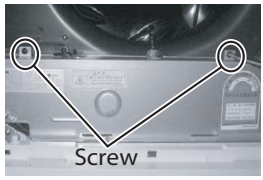

7 Connect one display connector and two vane control connectors of front panel to indoor unit PCB.
The position marking on PCB is as:
Display connector : CN-DISPLAY
Vane control connector: CN-VANE 1,2

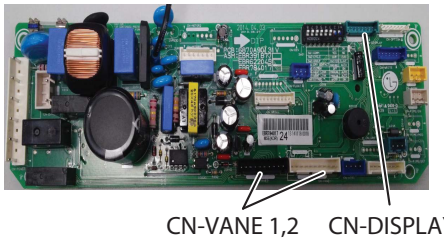

8 Close the cover for control box.



9 Install the air inlet grille and Filter on the panel.

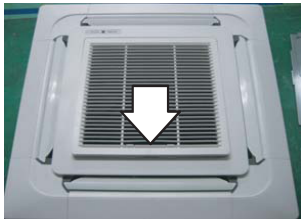

CAUTION: Install certainly the decorative panel.
Cool air leakage causes sweating. ⇨Water drops fall.

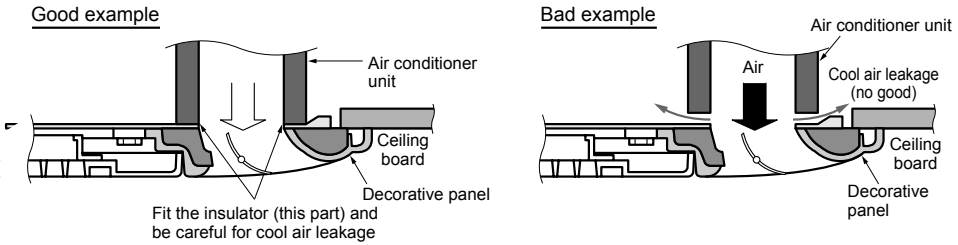

Indoor Unit Drain Piping

- Drain piping must have down-slope (1/50 to 1/100): be sure not to provide up-and-down slope to prevent reversal flow.
- During drain piping connection, be careful not to exert extra force on the drain port on the indoor unit.
- The outside diameter of the drain connection on the indoor unit is 32mm.

Piping material: Polyvinyl chloride pipe VP-25 and pipe fittings

- Be sure to execute heat insulation on the drain piping.

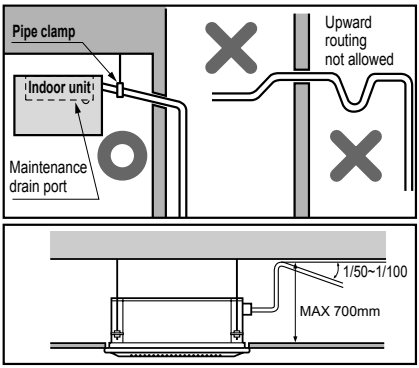

Heat insulation material: Polyethylene foam with thickness more than 8 mm.

• Drain test

The air conditioner uses a drain pump to drain water.
Use the following procedure to test the drain pump operation:

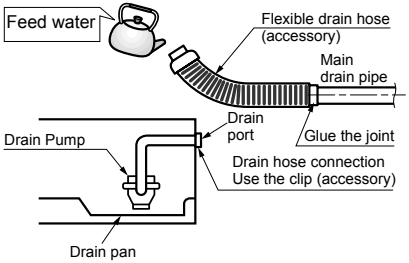

- Connect the main drain pipe to the exterior and leave it provisionally until the test comes to an end.
- Feed water to the flexible drain hose and check the piping for leakage.
- Be sure to check the drain pump for normal operating and noise when electrical wiring is complete.
- When the test is complete, connect the flexible drain hose to the drain port on the indoor unit.

CAUTION: The supplied flexible drain hose should not be curved, neither screwed. The curved or screwed hose may cause a leakage of water.

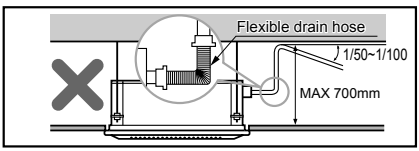

• HEAT INSULATION

1. Use the heat insulation material for the refrigerant piping which has an excellent heat-resistance (over 120℃).

2. Precautions in high humidity circumstance:
   This air conditioner has been tested according to the "KS Standard Conditions with Mist" and confirmed that there is not any default. However, if it is operated for a long time in high humid atmosphere (dew point temperature: more than 23°C), water drops are liable to fall. In this case, add heat insulation material according to the following procedure:

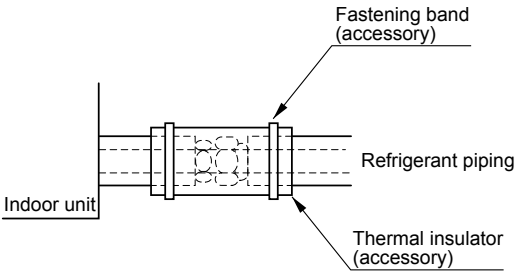

- Heat insulation material to be prepared Adiabatic glass wool with thickness 10 to 20mm.
- Stick glass wool on all air conditioners that are located in ceiling atmosphere.
- In addition to the normal heat insulation (thickness: more than 8mm) for refrigerant piping (gas piping: thick piping) and drain piping, add further 10mm to 30mm thickness material.

• FORM THE PIPINGS

1. Wrap the connecting portion of indoor unit with the Insulation material and secure it with two Plastic Bands. (for the right pipings)

- If you want to connect an additional drain hose, the end of the drain-outlet should keep distance from the ground. (Do not dip it into water, and fix it on the wall to avoid swinging in the wind.)

In case of the Outdoor unit being installed below position of the Indoor unit.

2. Tape the Pipings, drain hose and Connecting Cable from bottom to top.

3. Form the pipings gathered by taping along the exterior wall and fix it onto the wall by saddle or equivalent.

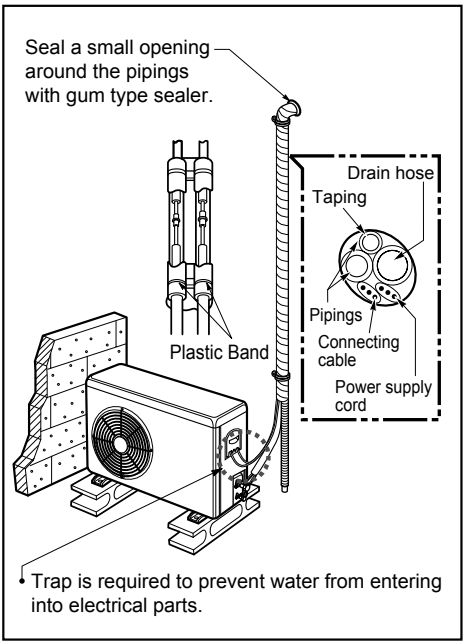

In case of the Outdoor Unit being installed above position of the Indoor Unit.

2. Tape the Pipings and Connecting cable from bottom to top.

3. Form the pipings gathered by taping along the exterior wall, and make the trap prevent water from entering into the room.

4. Fix the pipings onto the wall by saddle or equivalent.

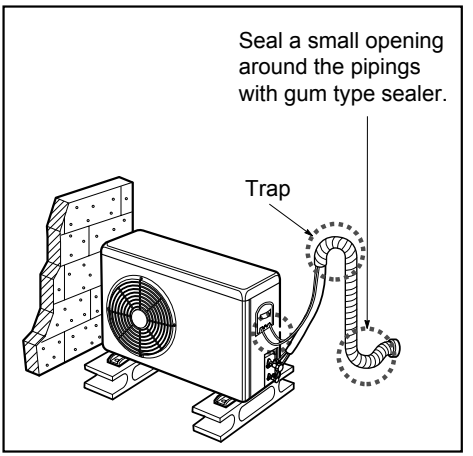

Test running

1) PRECAUTIONS IN TEST RUN

• The initial power supply must provide at least 90% of the rated voltage.
Otherwise, the air conditioner should not be operated.

CAUTION:

① For test run, carry out the cooling operation firstly even during heating season. If heating operation is carried out firstly, it leads to the trouble of compressor. Then attention must be paid.

② Carry out the test run more than 5 minutes without fail.
(Test run will be cancelled 18 minutes later automatically)

• The test run is started by pressing the room temperature checking button and down timer button for 3 seconds at the same time.
• To cancel the test run, press any button.

CHECK THE FOLLOWING ITEMS WHEN INSTALLATION IS COMPLETED

• After completing work, be sure to measure and record trial run properties, and store measured data, etc.
• Measuring items are room temperature, outside temperature, suction temperature, blow out temperature, wind velocity, wind volume, voltage, current, presence of abnormal vibration and noise, operating pressure, piping temperature, compressive pressure.
• As to the structure and appearance, check following items.

- Is the circulation of air adequate?
- Is the draining smooth?
- Is the heat insulation complete (refrigerant and drain piping)?
- Is there any leakage of refrigerant?
- Is the remote controller switch operated?
- Is there any faulty wiring?
- Are not terminal screws loosened?

M4.....118N·cm{12kgf·cm} M5.....196N·cm{20kgf·cm}
M6.....245N·cm{25kgf·cm} M8.....588N·cm{60kgf·cm}

2) Connection of power supply

1. **Connect the power supply cord to the independent power supply.**
   • Circuit breaker is required.
2. **Operate the unit for 15 minutes or more.**

3) Evaluation of the performance

1. Measure the temperature of the intake and discharge air.
2. Ensure the difference between the intake temperature and the discharge one is more than 8°C.

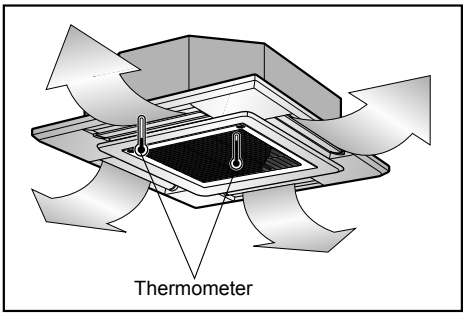

CAUTION

After the confirmation of the above conditions, prepare the wiring as follows:

1) Never fail to have an individual power specialized for the air conditioner. As for the method of wiring, be guided by the circuit diagram pasted on the inside of control box cover.

2) Provide a circuit breaker switch between power source and the unit.

3) The screw which fasten the wiring in the casing of electrical fittings are liable to come loose from vibrations to which the unit is subjected during the course of transportation. Check them and make sure that they are all tightly fastened. (If they are loose, it could give rise to burn-out of the wires.)

4) Specification of power source

5) Confirm that electrical capacity is sufficient.

6) Be sure that the starting voltage is maintained at more than 90 percent of the rated voltage marked on the name plate.

7) Confirm that the cable thickness is as specified in the power sources specification. (Particularly note the relation between cable length and thickness.)

8) Never fail to equip a leakage breaker where it is wet or moist.

9) The following troubles would be caused by voltage drop-down.

- Vibration of a magnetic switch, damage on the contact point there of, fuse breaking, disturbance to the normal function of a overload protection device.
- Proper starting power is not given to the compressor.

HAND OVER

Teach the customer the operation and maintenance procedures, using the operation manual (air filter cleaning, temperature control, etc.).

Installation Instructions

Installer Setting - How to enter installer setting mode

CAUTION

Installer setting mode is to set the detail function of the remote controller.
If the installer setting mode is not set correctly, it can cause problems to the product, user injury or property damage. This must be set by an certificated installer, and any installation or change that is carried out by a non-certificated person should be responsible for the results. In this case, free service cannot be provided.

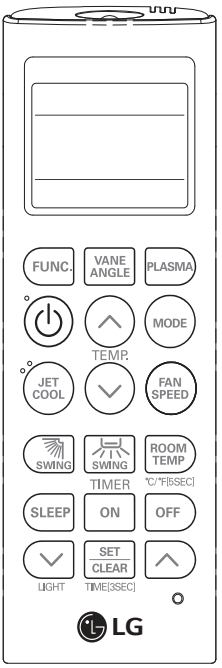

1. With the FAN SPEED button pressed, press the RESET button.
2. By using the TEMPERATURE SETTING button, set function code and setting value. (Please refer the Installer Setting Code Table.)
3. Press the ON/OFF button toward the indoor unit 1 time.
4. Reset the remote controller to use the general operation mode.

Refer to the Installer Setting Code Table on the next page.

Installer Setting - Installer Setting Code Table

Installer Setting Code Table

No.	Function	Function Code	Setting Value	Remote Controller LCD
0	Mode Override	0	0 : Set to Master	0.0
			1 : Set to Slave	0.1
1	Ceiling Height Selection	1	1 : Standard	1.1
			2 : Low	1.2
			3 : High	1.3
			4 : Super High	1.4
2	Group Control	2	0 : Set to Master	2.0
			1 : Set to Slave	2.1
			2 : Check Master/Slave	2.2
	Auxiliary heater	2	3 : Set to Auxiliary heater	2.3
			4 : Cancel Auxiliary heater	2.4
			5 : Check Auxiliary heater Installation	2.5

Mode Override

This Function is only for Non-Auto Changeover H/P model.

Ceiling Height Selection

Indoor unit connected to wired remote controller operate as wired remote controller setting.

Group Control

This function is only for group control. Please don't set this function in case of non-group control.

After setting Group Control of the product, turn off the power then turn it back on after 1 minute.

Auxiliary heater

This function is only applied to models with Auxiliary Heater function being activated.

Installer Setting - Setting Address of Central Control

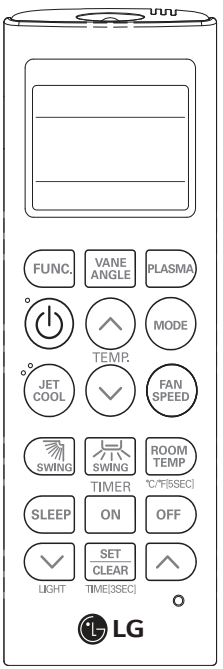

1. With the MODE button pressed, press the RESET button.

2. By using the temperature setting button, set the indoor unit address.

   • Setting range : 00 ~ FF

3. After setting the address, press the ON/OFF button toward the indoor unit 1 time.

4. The indoor unit will display the set address to complete the address setting.

   • The address display time and method can differ by the indoor uint type.

5. Reset the remote controller to use the general operation mode.

Installer Setting - Checking Address of Central Control

1. With the PLASMA button pressed, press the RESET button.

2. Press the ON/OFF button toward the indoor unit 1 time, and the indoor unit will display the set address in the display window.

   • The address display time and method can differ by the indoor unit type.

3. Reset the remote controller to use the general operation mode.

Memo


LG
Life's Good