Scan the QR code to see the manual.

OWNER'S MANUAL

DRYER

Before beginning installation, read these instructions carefully. This will simplify installation and ensure that the product is installed correctly and safely. Leave these instructions near the product after installation for future reference.

ENGLISH

RH10X7*****

MFL72160157
Rev.01_110626

www.lg.com

Copyright © 2025-2026 LG Electronics. All Rights Reserved

TABLE OF CONTENTS

This manual may contain images or content that may be different from the model you purchased.

This manual is subject to revision by the manufacturer.

SAFETY INSTRUCTIONS

READ ALL INSTRUCTIONS BEFORE USE 3
WARNING 3

INSTALLATION

Parts and Specifications 9
Installation Location Requirements 13
Leveling the Appliance 14
Stacking Instructions 14

OPERATION

Operation Overview 17
Preparing the Clothes 18
Control Panel 21
Programme Table 23
Extra Options and Functions 29

SMART FUNCTIONS

LG ThinQ Application 33
Smart Diagnosis 36

MAINTENANCE

Cleaning after Every Dry 38
Cleaning the Appliance Periodically 41

TROUBLESHOOTING

Before Calling for Service 44

SAFETY INSTRUCTIONS

READ ALL INSTRUCTIONS BEFORE USE

The following safety guidelines are intended to prevent unforeseen risks or damage from unsafe or incorrect operation of the appliance. The guidelines are separated into 'WARNING' and 'CAUTION' as described below.

Safety Messages

⚠ This symbol is displayed to indicate matters and operations that can cause risks. Read the part with this symbol carefully and follow the instructions in order to avoid risks.

⚠ **WARNING**
This indicates that the failure to follow the instructions can cause serious injury or death.

⚠ **CAUTION**
This indicates that the failure to follow the instructions can cause the minor injury or damage to the appliance.

WARNING

⚠ WARNING

- To reduce the risk of explosion, fire, death, electric shock, scalding or injury to persons when using this product, follow basic precautions, including the following:

Technical Safety

- This appliance is not intended for use by persons (including children) with reduced physical, sensory or mental capabilities, or lack of experience and knowledge, unless they have been given supervision or instruction concerning use of the appliance by a person responsible for their safety. Children should be supervised to ensure that they do not play with the appliance.

- Do not dry unwashed items in the appliance.
- Fabric softeners, or similar products, should be used as specified by the fabric softener instructions.
- Remove all objects from pockets such as lighters and matches.
- Never stop the appliance before the end of the drying cycle unless all items are quickly removed and spread out so that the heat is dissipated.
- The appliance is not to be used if industrial chemicals have been used for cleaning.
- Items that have been soiled with substances such as cooking oil, vegetable oil, acetone, alcohol, petroleum, kerosene, spot removers, turpentine, waxes and wax removers should be washed in hot water with an extra amount of detergent before being dried in the appliance.
- Items such as foam rubber (latex foam), shower caps, waterproof textiles, rubber backed articles and clothes or pillows fitted with foam rubber pads should not be dried in the tumble dryer.
- Do not drink the condensed water. Failure to do so may result in food-borne illnesses.
- If the supply cord is damaged, it must be replaced by the manufacturer or its service agents or similarly qualified person in order to avoid a hazard.
- The lint filters must be cleaned frequently.
- Lint must not to be allowed to accumulate around the appliance.
- Do not spray dry cleaning detergent directly onto the appliance or use the appliance to dry clothes left with dry cleaning detergent.
- Do not dry clothes stained with oil substances. Oil substances (including edible oils) stained on clothes cannot be completely removed even after washing with water.
- The appliance must not be supplied through an external switching device, such as a timer, or connected to a circuit that is regularly switched on and off by a utility.
- Remove clothes from the appliance immediately when drying is complete or the power is turned off during the drying process.

Leaving clothes that have been dried in the appliance unattended could result in fire. Remove clothes immediately after drying, and then hang or lay the clothes flat to cool.

- This appliance is intended to be used in household only.

Refrigerant Safety



WARNING - To avoid a fire
Risk of Fire and Flammable Materials

- In the appliance enclosure or in the built-in structure, keep ventilation openings clear of obstruction. If not, it can result in a fire.
- This appliance contains R290, a refrigerant that is environmentally friendly but flammable. Do not damage the refrigerant circuit, keep an open flame and ignition sources away from the appliance.

Maximum Capacity

- The maximum capacity in some cycles for clothes to be dried is **10 kg (Dry)**.
- The recommended maximum capacity for each drying programme may differ. To get good dry results, please refer to **Programme Table** in **OPERATION** chapter for further details.

Installation

- Make sure the appliance is properly installed, earthed, and adjusted by qualified service personnel according to the installation instructions.
- Never attempt to operate the appliance if it is damaged, malfunctioning, partially disassembled, or has missing or broken parts, including a damaged cord or plug.
- This appliance should only be transported by two or more people holding the appliance securely.

- Do not install the appliance in a damp and dusty place. Do not install or store the appliance in any outdoor area, or any area that is subject to weather conditions such as direct sunlight, wind, rain, or temperatures below freezing.
- This appliance must not be installed behind a lockable door, a sliding door or a door with a hinge on the opposite side to that of the appliance, in such a way that a full opening of the appliance door is restricted.
- Tighten the drain hose to avoid separation.
- If the power cord is damaged or the hole of the socket outlet is loose, do not use the power cord and contact an authorized service centre.
- Make sure the power plug is completely pushed into the socket outlet.
- Do not plug the appliance into multiple outlet adapters, power strips, or an extension power cable.
- This appliance must be earthed via the power cord.
- This appliance is equipped with a power cord having an equipment-earthing conductor and an earthing power plug. The power plug must be plugged into an appropriate socket outlet that is installed and earthed in accordance with all local codes and ordinances.
- In the event of malfunction or breakdown, earthing will reduce the risk of electric shock by providing a path of least resistance for electric current.
- Improper connection of the equipment-earthing conductor can result in a risk of electric shock. Check with a qualified electrician or service personnel if you are in doubt as to whether the appliance is properly earthed.
- Do not modify the power plug provided with the appliance. If it does not fit the socket outlet, have a proper socket outlet installed by a qualified electrician.
- If the power cord or plug is damaged, do not use the power cord and contact an authorized service centre.

Operation

- Do not attempt to separate any panels or disassemble the appliance. Do not apply any sharp objects to the control panel in order to operate the appliance.
- Do not repair or replace any part of the appliance yourself. All repairs and servicing must be performed by qualified service personnel unless specifically recommended in this Owner's Manual. Use only authorized factory parts.
- Keep the area underneath and around the appliance free from combustible materials such as lint, paper, rags, chemicals, etc.
- Do not put pets or other animals into the appliance.
- Do not leave the appliance door open. Children may hang on the door or crawl inside the appliance, causing damage or injury.
- Never reach into the appliance while it is operating. Wait until the drum has completely stopped.
- Do not put in, wash or dry articles that have been cleaned in, washed in, soaked in, or spotted with combustible or explosive substances (such as wax, oil, paint, gasoline, degreasers, drycleaning solvents, kerosene, vegetable oil, cooking oil, etc.). Improper use can cause fire or explosion.
- In case of flood, disconnect the power plug and contact the LG Electronics customer information centre.
- Do not push down on the appliance door when it is open.
- Do not use flammable gas and combustible substances (benzene, gasoline, thinner, petroleum, alcohol, etc.) near the appliance.
- If the drain hose or inlet hose is frozen during winter, thaw it out before using the appliance.
- Keep all washing detergents, softener and bleach away from children.
- Do not touch the power plug or the appliance controls with wet hands.
- Do not bend the power cable excessively or place a heavy object on it.

Maintenance

- Remove any moisture or dust from the power plug before securely plugging it into a socket outlet.
- Disconnect the appliance from the power supply before cleaning the appliance. Setting the controls to the OFF or stand by position does not disconnect this appliance from the power supply.
- Never unplug the appliance by pulling on the power cable. Always grip the power plug firmly and pull straight out from the socket outlet.
- Do not spray water inside or outside the appliance to clean it.

Disposal

- Before discarding an old appliance, unplug it and cut off the power cable directly behind the appliance to prevent misuse.
- Dispose of all packaging materials (such as plastic bags and styrofoam) away from children. The packaging materials can cause suffocation.
- Remove the door before disposing of or discarding this appliance to avoid the danger of children or small animals getting trapped inside.

INSTALLATION

Parts and Specifications

NOTE

- Appearance and specifications may vary without notice to improve the quality of the appliance.

Front View

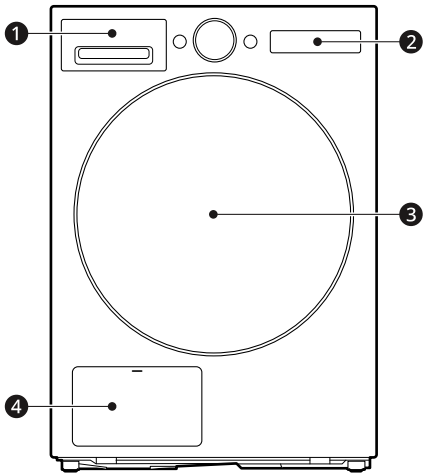

❶ Water Container
❷ Control Panel
❸ Door
❹ Condenser Cover

Available Accessories

Please contact LG Electronics Customer Information Centre or visit the LG Website at http://www.lg.com for purchase.

*1 This can be purchased separately.

Drain Hose Assembly

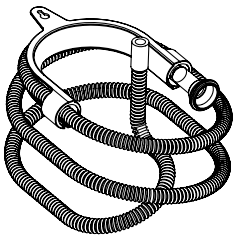

Components:

- Condensing Drain Hose



- Elbow Bracket for Securing Drain Hose

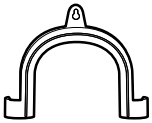

- Drain Hose Holder

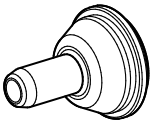

Dry Rack

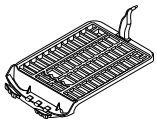

Metal Holder



Plastic Holder

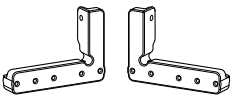

Stacking Kit*1

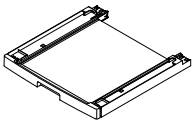

NOTE

- In order to stack the appliance, the stacking kit should be purchased separately.
- Some models do not include the Metal and Plastic Holders.

Specifications

Asterisk(s) means model variant and can be varied (0-9) or (A-Z).

Model	RH10X7*****
Power supply	220-240 V~, 50 Hz
Product weight	55 kg
Allowable temperature	5 - 35 ℃

Dimension(mm)

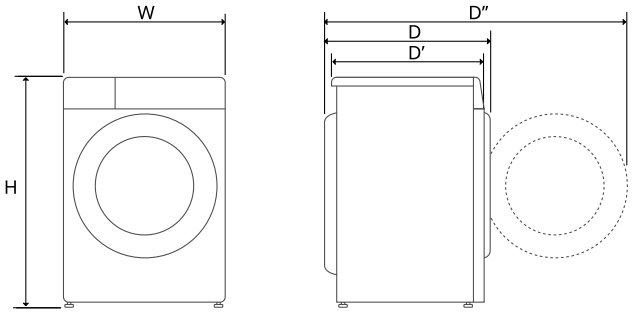

W	600	D	660	D''	1140
H	850	D'	615		

Installation Location Requirements

Before installing the appliance, check the following information to make sure that the appliance is installed in the correct location.

Installation Location

⚠ WARNING

- Do not install the appliance around a heat source. The rear side of the appliance must be well ventilated. Failure to follow these instructions may result in problems.
- The appliance is not designed for maritime use or for use in mobile installation such as caravans, aircraft and etc.
- Do not install the appliance as a built-in appliance. It is not suitable for built-in purpose.

NOTE

- For better drying performance, keep the rear of the appliance away from the wall.

- Make sure that the location where the appliance will be installed meets a minimum clearance conditions.
- Install the appliance on a flat hard floor. Allowable slope under the appliance is 1 degree.
- Never try to correct any unevenness in the floor with pieces of wood, cardboard or similar materials under the appliance.
- Install the appliance in a location where service engineers are easily accessible in the event of a breakdown.
- Do not install the appliance next to high-temperature appliances such as refrigerator, oven or stove, and etc. It can cause poor drying performance and delay programme duration. It also adversely affect the proper functioning of the compressor.
- Do not install the appliance where there is a risk of frost or dust. The appliance may not be able to operate properly or may be damaged by freezing of condensed water in the pump and drain hose.
- With the appliance installed, adjust all four feet using a spanner to ensure the appliance is stable, and a clearance of approximately 20 mm is left between the top of the appliance and the underside of any work-top.

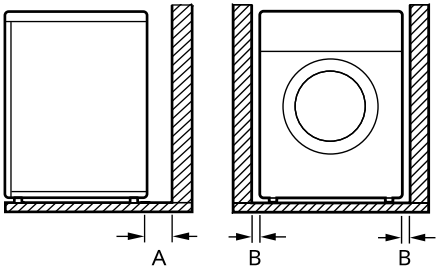

Index	Clearance (mm)
A	100
B	20

Ventilation

- Alcove or under counter
  - Make sure that air circulation around the appliance should not be impeded by carpets, rugs, etc.
- Cupboard
  - Cupboard door must have 2 (louvered) opening, each have a minimum area of 387 cm^2, located 8 cm from bottom and top of the door.

Ambient Temperature

- Do not install the appliance in rooms where freezing temperatures may occur. Frozen hoses may burst under pressure. The reliability of the electronic control unit may be impaired at temperatures below freezing point.

NOTE

- If the appliance is delivered in winter and temperatures are below freezing, place the appliance at room temperature for a few hours before putting it into operation.
- The appliance performs best at a room temperature of 23 ℃.

Electrical Connection

- Do not use an extension cord or double adapter.
- Do not overload the outlet with more than one appliance.
- Connect the appliance to an earthed socket in accordance with current wiring regulations.
- The appliance must be positioned a place close to outlet socket so that the plug is easily accessible.
- Outlet socket must be within 1.5 meters of either side of the location of the appliance.

NOTE

- Always unplug the appliance after use.

Leveling the Appliance

Checking Leveling

Leveling the appliance prevents unnecessary noise and vibration. Check whether the appliance is perfectly level after installation.

- If the appliance rocks when pushing the top plate of the appliance diagonally, adjust the feet again.

NOTE

- Timber or suspended type flooring may contribute to excessive vibration and unbalance. Re-enforcement or bracing of the timber floor may need to be considered to stop or reduce excessive noise and vibration.
- Do not install the appliance on any elevated surface, stand or plinth as it can become unstable and fall causing serious injury and damage.

Adjusting and Leveling the Appliance

When the appliance is not perfectly level, turn the adjustable feet until the appliance no longer wobbles.

- Turn the adjustable feet clockwise to raise or turn the adjustable feet counterclockwise to lower from front-to-back, side-to-side and corner-to-corner.

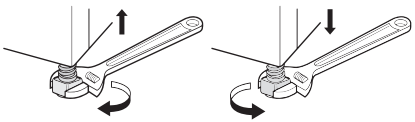

Stacking Instructions

The appliance can be placed on top of an LG front load washing machine and securely fixed with a stacking kit. This installation must be conducted by qualified service personnel to ensure it has been installed correctly.

The qualified personnel will ensure you have the correct stacking kit for your model of LG front load washing machine and will ensure it is firmly fixed. For these reasons, expert fitting is essential.

NOTE

- Some models are not sold with all of the available accessories, you may need to purchase the LG stacking kit first if it was not provided with your model. Please contact LG Electronics Customer Information Centre or visit the LG Website at http://www.lg.com for purchase.
- Stacking on the LG SIGNATURE washing machine is **unavailable**.

Stacking Kit

In order to stack the appliance, an LG stacking kit is required.

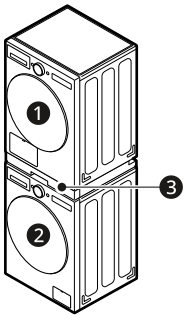

❶ Dryer
❷ LG Front Load Washing Machine
❸ Stacking Kit

⚠ CAUTION

- The appliance may only be stacked on top of an LG front load washing machine. Do not attempt to stack the appliance on any other washing machine, as it could result in damage, injury or property damage.

Installation Procedure

⚠ WARNING

- For safety reasons, installation procedure should be performed by two or more qualified service personnel.
- The weight of the appliance and the height of the installation makes the installation procedure too risky for one person.
- Incorrect installation can cause serious accidents.
- Do not operate if the appliance is not properly stacked.

NOTE

- The stacking kit should be aligned depending on the depth of the washing machine. (When you open the door or look at the side of the washing machine, you can find the dimension information of your washing machine at the label.)

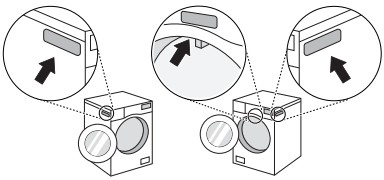

Installing the Optional Drain Hose

Normally, condensed water is pumped up to the water container where water is collected until manually emptied. Water can also be drained out directly to a mains drain, especially when the appliance is stacked on top of a washing machine. With the connecting elbow or T piece of the mains drain hose, simply change the water path and re-route to the drainage facility as below:

1 Separate the anti-backflow lid ❶ and the water container hose ❷ from the connecting elbow or T piece.

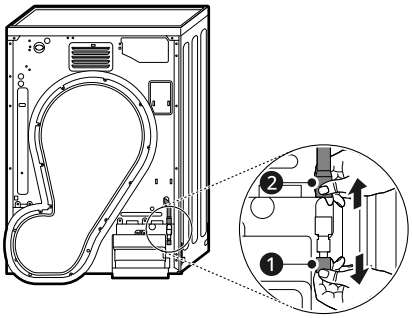

2 Attach the anti-backflow lid ❶ to the head of the connecting elbow or T piece and then

connect the optional drain hose ❸ to the opposite side of the connecting elbow or T piece.

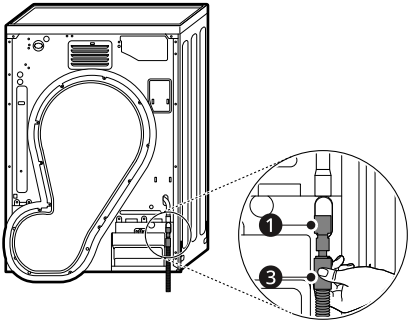

3 The drain hose should not be placed higher than 150 cm above the floor. Water in the appliance may not drain or may drain slowly.

- Securing the drain hose correctly will protect the floor from damage due to water leakage.

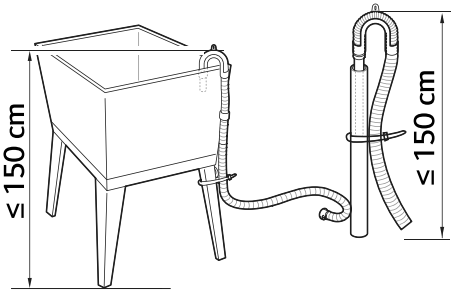

- If the drain hose is too long, do not force it back into the appliance. This will cause abnormal noise.
- When installing the drain hose to a sink, secure it tightly with string.

⚠ CAUTION

- If the optional drain hose is installed in a way that leaves it bent or pinched, drainage may not function properly.

OPERATION

Operation Overview

Using the Appliance

Open the door between loads the first few times you use the appliance to allow any odours from the interior of the appliance to disperse.

Children must be supervised so that they do not climb inside the drum.

1 Ensure the lint filter and water container are clean.

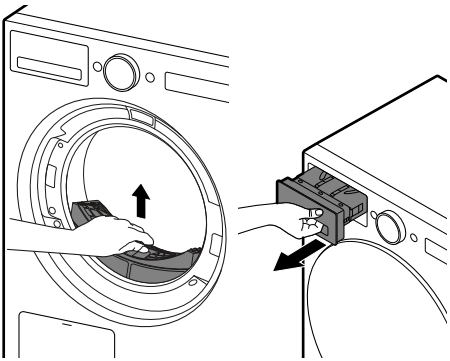

- Open the door and ensure the lint filter is clean. When the filter is full with lint, drying times will be longer than usual.
- Pull out the water container and empty the condensed water. When the water container is full, the appliance may stop during the cycle.

NOTE

- In some instance, LCD window may display empty water to inform you that the water container is full. If this occurs, empty the water container.

2 Place the clothes into the drum after sorting and close the door.

- Push the clothes deep into the drum so that the clothes keeps away from the door seal. When the clothes get stuck between the door and seal, they may get damaged while drying.
- The clothes should be sorted by fabric types and dryness level.
- All strings and attached belts of clothes should be well tied and fixed before being put into the drum.

3 Press the **Power** button to turn the appliance on.

- Depending on the models, the **Power** button may light up to indicate that the appliance is ready for dry.



4 Choose a drying programme by turning the programme selector knob.

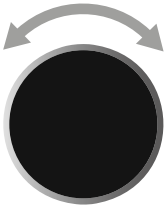

5 Press the **Start/Pause** button to start the drying programme.

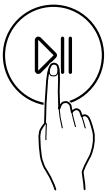

NOTE

- The appliance washes lint, which builds up onto the surface of the condenser, automatically using water that is condensed from the clothes during operation.
- The frequency of cleaning condenser may vary depending on the size and the initial moisture amount of the clothes.

6 After the drying programme has finished, open the door and unload the clothes.

⚠ CAUTION

- Be carefull! The drum inside may still be hot.

7 Clean the lint around the door glass, rubber packing, and filter.
   - Wipe clean with a damp cloth or wet tissue.

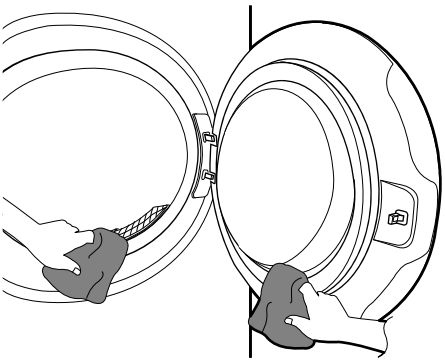

8 Clean the lint filter and empty the water container.

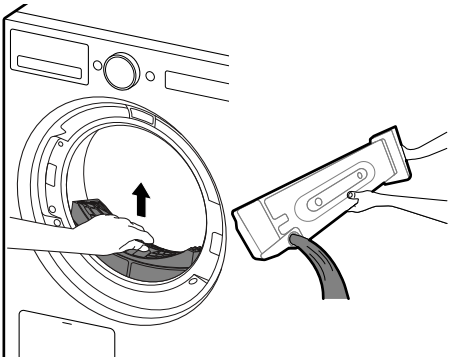

9 To help reduce odours from forming, the dryer's door can be left open or slightly ajar for a short period of time if possible to help ventilate the drum after use.

⚠ WARNING

- For safety reasons, do not allow children or animals to enter the appliance. It may cause damage or injury.

NOTE

- The final part of a tumble dry cycle occurs without heat (cool down cycle) to ensure that the clothes are left at a temperature that ensures the clothes will not be damaged.
- A high atmospheric temperature and a small room may both increase drying time as well as energy consumption.

Preparing the Clothes

NOTE

- For the best drying performance and most efficient energy usage, do not overload the appliance.

Checking the Clothes before Loading

⚠ CAUTION

- Check that the clothes are not stuck between appliance and door, otherwise the clothes may get damaged while drying.

- Observe the maximum load capacity on the programme table for the relevant drying programme to get optimum drying results. Overloading gives a poor drying result and causes unnecessary creasing.
- Do not load soaking wet clothes into the appliance. Doing so will increase the drying time and energy consumption. Make sure that the clothes are spun thoroughly in the washer before loading them in the dryer.
- A mixed fabric load can cause the drying time to be extended and the time remaining in the display to pause during active drying until the actual time remaining matches the time displayed.
- Make sure to empty all pockets. Items such as nails, hair clips, matches, pens, coins and keys can damage both your appliance and clothes.
- Remove loose belts and close zippers, hooks and strings to make sure that these items do not snag other clothes.

Sorting the Clothes

Clothes have their own fabric care labels, so drying according to the fabric care label is recommended.

Sort the clothes into size and type of fabric and then prepare the clothes according to the symbols on the fabric care labels.

Woollens

- Dry woollens on the **Wool** programme. Be sure to follow fabric care label symbols first. Wool may not be completely dried from the cycle, so do not repeat drying. Pull woollens to their original shape and dry them flat.

Woven and Loopknit Materials

- Some woven and loopknit materials may shrink, depending on quality.

No-Iron and Synthetics

- Do not overload the appliance. Take out no-iron items as soon as the appliance stops to reduce creases.

Baby Clothes and Nightgowns

- Always check fabric care labels.

Rubber and Plastics

- Do not dry any items made from or containing rubber or plastics such as:
  - Aprons, Bibs and Chair Covers
  - Curtains and Tablecloths
  - Bath Mats

Fiberglass

- Do not dry fiberglass items in the appliance. Glass particles left in the appliance may be subsequently picked up by your clothes in later cycles.

Checking the Fabric Care Label

The symbols on the fabric care label tell you about the fabric content of your clothes and how they should be dried.

Symbol	Description
	Dry
	Tumble Dry
	Permanent Press / Crease Resistant
	Gentle / Delicate
	Do not Tumble Dry
	Do not Dry
	High Heat
	Medium Heat

Symbol	Description
	Low Heat
	No Heat / Air
	Line Dry / Hang to dry
	Drip Dry
	Dry Flat
	In the Shade

Control Panel

Control Panel Features

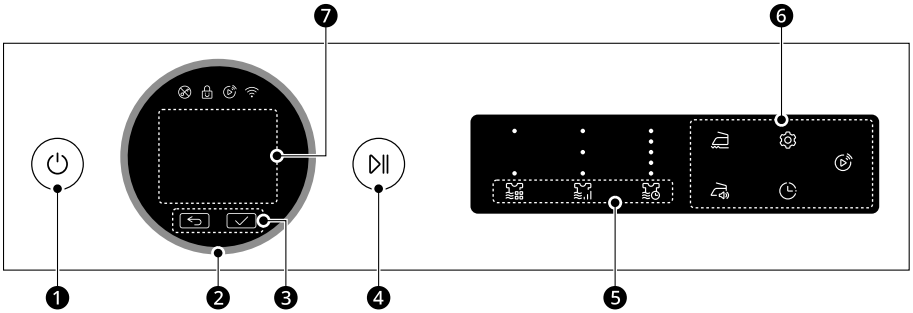

	Description
❶	**Power Button** • Press the **Power** button to turn power on and off. • Press the **Power** button to cancel the **Delay End** function.
❷	**Programme Selector** • Turn this knob to select the desired programme or option. • Once the desired programme has been selected, the standard presets will appear in the display. These settings can be adjusted using the **Programme Modifier Buttons** at any time before starting the programme.
❸	**↩ & ✓ Buttons** • Press the ↩ button to go to the previous screen. • Press the ✓ button to select a menu item or save the information.
❹	**Start/Pause Button** • Press the **Start/Pause** button to start or pause a dry programme. • When in pause, the power is turned off automatically after a certain time for safety reasons.
❺	**Customizing Drying Programme Buttons** Use these buttons to adjust the **Dry Mode**, **Dry Level** or **Dry Time** settings for the selected programme. • The current settings are shown in the display. • Press the button for that option to select other settings.

	Description
❻	**Option and Extra Functions Buttons** • Use these buttons to select the desired options for the selected programme. Not all options are available in each programme. • To use the extra functions, press the corresponding button. The corresponding symbol lights up in the display. **Anti Crease, Damp Alert, Delay End, Settings** • In order to use this function, refer to **Extra Options and Functions**. **Remote Start** • With the **LG ThinQ** app, you can use a smartphone to control your appliance remotely. • In order to use this function, refer to **SMART FUNCTIONS**.
❼	**Time and Status Display** • The display shows the settings, estimated remaining time, options, and status messages. When the appliance is turned on, the default settings in the display will illuminate.

Time and Status Display

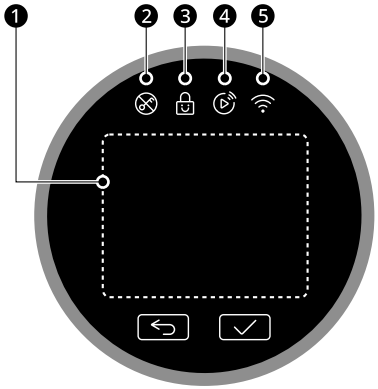

	Description
❶	**Status Display** • The display shows the settings, estimated time remaining, options, and status messages.
❷	lights up when the programme starts and the door is locked.
❸	lights up when the **Child Lock** feature is activated.
❹	lights up when the **Remote Start** feature is activated.
❺	lights up when the appliance is connected to Wi-Fi network at home.

Programme Table

Drying Programme

Default Drying Programme

These programmes are in the initial programme list.

Programme	Cotton	Max. Load: 10 kg
Description	Use for drying all normal items such as cotton, linen, shirts, jeans or mixed loads, except delicate fabrics such as wool or silk.	
Dry Level	Default : **Cupboard**	Available : **All**

Programme	AI Dry	Max. Load: -
Description	This programme optimizes drying times and temperatures by detecting the laundry's characteristics. • When the characteristics of the dry material are detected, the drying time may either increase or decrease. • The drying degree may vary depending on the type and thickness of the fabric and the installation environment. Some fabrics may feel damp when cotton and soft synthetics are mixed. • When drying a duvet or blanket, use the **Duvet** programme.	
Dry Level	Default : **Cupboard**	Not adjustable

Programme	TurboDry	Max. Load: 5 kg
Description	Use this programme for drying light items such as cotton-synthetic blends and synthetics.	
Dry Level	Default : **Cupboard**	Not adjustable

Programme	Mixed Fabric	Max. Load: 4 kg
Description	Dries mixed fabrics simultaneously. • Use for various kind of fabrics except special garments (silk/delicate, sports wear, dark clothes, wool, duvet/curtains).	
Dry Level	Default : **Cupboard**	Available : **All**

Programme	Quick 30	Max. Load: 1 kg
Description	Use this programme for drying up to 3 pieces of polyamide, acrylic and polyester items.	
Dry Level	Not adjustable	

Programme	Delicates	Max. Load: 1.5 kg
Description	Use this programme for drying dress shirts, blouses, nylons, lingerie, or sheer and lacy clothes which can easily be damaged.	
Dry Level	Not adjustable	

Programme	Easy Care	Max. Load: 4 kg
Description	Dries clothes that do not need ironing after drying. • Use for polyamide, acrylic, polyester.	
Dry Level	Default : **Cupboard**	Available : **Cupboard**, **Iron**

Programme	Wool	Max. Load: 1 kg
Description	Use this programme for drying shrinkable woolen or hand-washable items requiring delicate care.	
Dry Level	Not adjustable	

Programme	Timed Dry	Max. Load: -
Description	Use this programme to manually select the drying time from 20 to 180 minutes.	
Dry Time	Default: 20 minutes	Available: 20-180 minutes

Programme	Activewear	Max. Load: 2 kg
Description	Use this programme for drying special garments such as sports and outdoor wear.	
Dry Level	Not adjustable	

Programme	Allergy Care	Max. Load: 4.5 kg
Description	Use this programme helps to reduce allergens such as dust mites.	
Dry Level	Not adjustable	

Programme	Drum Care	Max. Load: -
Description	This programme prevents unpleasant odours in the drum.	
Dry Level	Not adjustable	

Programme	Outerwear Refresh	Max. Load: 1 kg
Description	This programme restores the durable water repellent treatment on outerwear. Only one item per cycle. Not intended for drying wet clothes.	
Dry Level	Not adjustable	

Non-Default Drying Programme

Edit the list of drying programmes using the **Cycle List Edit** option to use these programmes.

Programme	Air Dry	Max. Load: -
Description	Use this programme for drying all items (such as plastics or rubber) that should be tumble dried without using heat.	
Dry Time	Default: 60 minutes	Available: 20-180 minutes

Programme	Super Dry	Max. Load: 10 kg
Description	Thoroughly dries cotton fabrics.	
Dry Level	Default : **Extra**	Not adjustable

Programme	Easy Ironing	Max. Load: 4 kg
Description	Leaves clothes slightly damp for easy ironing.	
Dry Level	Default : **Iron**	Not adjustable

Programme	Rainy Days	Max. Load: 4 kg
Description	Dries damp clothes.	
Dry Level	Not adjustable	

Programme	Towels	Max. Load: 4.5 kg
Description	Use this programme for drying towels.	
Dry Level	Not adjustable	

Programme	Duvet	Max. Load: 2.5 kg
Description	Use this programme for drying blankets or bulky items such as pillows, blankets, comforters, sheets or pet bedding.	
Dry Level	Not adjustable	

Programme	Bedding Refresh	Max. Load: 3 kg
Description	Use this programme for removing dust from the beddings with airflow.	
Dry Level	Not adjustable	

Programme	Warm Air	Max. Load: -
Description	Small items and damp clothing suitable for heat drying.	
Dry Time	Default: 60 minutes	Available: 20-180 minutes

Programme	Crease Prevention	Max. Load: 10 kg
Description	Prevents creases by tumbling clothes after the cycle.	
Dry Level	Default : **Cupboard**	Not adjustable

Programme	Rack Dry	Max. Load: -
Description	Use this cycle when it is necessary to dry clothes using the drying rack, i.e. on a flat surface without tumble action. The **Rack Dry** cycle can be used to dry delicate clothes such as sweaters.	
Dry Time	Default: 180 minutes	Available: 20-180 minutes

Programme	Down Jacket Refresh	Max. Load: 2 kg
Description	Restore the padded jacket to a fluffy one without washing.	
Dry Level	Not adjustable	

⚠ CAUTION

- If the load is less than 1 kg, please use the **Timed Dry** programme. Wool items should be dried using the **Wool** programme and heat-sensitive fabrics including silk, underwear and lingerie should be dried using the **Delicates** programme. Please comply with the recommended clothing load when you select your desired programme. Otherwise, your clothes may be damaged.

NOTE

- If the appliance is installed as built under, it may cause performance degradation.
- If the clothes are not spun at a high speed during washing, energy consumption and drying times will increase. Large Bed sheets or quilt covers may not dry evenly due to uneven airflow should they become rolled up. They may require removal and reloading mid cycle to ensure proper drying.

Selectable Drying Options

*1 This option is automatically inserted in the programme and can not be deselected.

NOTE

- **Delay End** option can be selected for every drying programme in this table.

Programme	Dry Mode			Anti Crease
	Off	Efficiency	Turbo	
Cotton		●	●	●
AI Dry			●	●
TurboDry			●	●
Mixed Fabric		●	●	●
Quick 30			●	●
Delicates		●		●
Easy Care		●	●	●
Wool		●		●
Timed Dry			●	●
Activewear		●		●
Allergy Care			●	●
Drum Care			●	
Outerwear Refresh			●	●
Air Dry	●			●
Super Dry			●	●
Easy Ironing		●		●
Rainy Days			●	●
Towels			●	●
Duvet			●	●

Programme	Dry Mode			Anti Crease
	Off	Efficiency	Turbo	
Bedding Refresh			●	●
Warm Air		●	●	●
Crease Prevention			●	●*1
Rack Dry		●		●
Down Jacket Refresh			●	●

Extra Options and Functions

Customizing a Drying Programme

Each programme has default settings that are selected automatically. You may also customize these settings using these buttons.

Dry Mode
It allows you to offer the option of saving energy or time.

- **Efficiency**: This mode saves energy but extends the drying time. The appliance dries the clothes with less energy at low temperatures by compressing the refrigerant to lower pressure than default mode.
- **Turbo**: This mode saves the drying time but consumes more energy. The appliance dries the clothes fast at high temperatures by compressing the refrigerant to higher pressure than default mode.

Dry Level
It allows you to select a dryness level for the drying programme.

- **Extra**: For thick and quilted fabrics
- **Cupboard**: For fabrics that do not need to be ironed
- **Iron**: For fabrics that need to be ironed

Dry Time
Use this option to manually select the drying time, from 20 to 180 minutes.

Follow the next steps to customize a drying programme:

1 Prepare the clothes and load the drum.

2 Press the **Power** button.

3 Select a drying programme.

4 Customize the drying programme (**Dry Mode**, **Dry Level**, and **Dry Time**) as necessary.

5 Press the **Start/Pause** button.

Using Extra Options

You can customize the programmes by using the following options:

Anti Crease
It allows you to reduce creases that are formed when the clothes are not unloaded promptly at the end of drying cycle.

When the option is turned on, a lamp indicated that the anti crease option is set, lights up and the appliance repeatedly runs for 10 seconds and pauses for 5 minutes. The option is turned off automatically after 2 hours at the end of drying cycle

To turn off the option, press the **Anti Crease** button before you start a drying cycle.

NOTE

- When the option is set, a symbol appears on the display until the feature is off.
- When the option is set, only the **Power** button works after the drying cycle is end.
- When a drying cycle is running, pause the cycle first to set the option.
- Always turn off the appliance before unloading the clothes.

Damp Alert
When this option is selected, the appliance signals when the load is approximately 80% dry. This allows you to remove faster-drying lightweight items or items that you would like to iron or hang while they are still slightly damp.

Delay End
It allows you to delay the finishing time of the drying cycle from 3 hours to 19 hours.

1 Press the **Power** button.

2 Select a programme.

3 Press the **Delay End** button to schedule your appointment.
(For example, if it is currently 1 p.m. and you want to finish drying at 7.p.m, set it after 6 hours (7-1=6).)
- Turn the knob to select desired reservation time and press the ✓ button.
- When the reservation function is set, the **Delay End** button will light up.

4 Press the **Start/Pause** to start the scheduled drying cycle.
- If you want to modify the **Delay End**, pause it first and then press the **Delay End** button. After modifying the **Delay End** function, press the ✓ button to save it and start it again.

NOTE

- Reservations can be made every 30 minutes from 3 to 19 hours, and reservations are not made for less than 3 hours.
- The reservation time and the actual end time may vary depending on the amount of drying.
- If you change the course by turning the operation dial after setting the reservation function, the reservation function is canceled.
- If the power is turned off due to a power outage, the reservation will be canceled.
- The **Delay End** function does not apply to the **Condenser Care** programme.

Using Various Settings

Settings

1 Press the ⚙ **Settings** button.

2 Turn the knob to select the desired setting and press the ✓ button.

3 Turn the knob to select or change the setting and press the ✓ button to save the setting.

4 To return to the previous screen, press the **Settings** button again or press the ↩ button.

NOTE

- If no action is taken for several minutes after pressing the **Settings** button, the display reverts to the previous screen.

Drum Light
The drum is equipped with a white LED light that illuminates when the dryer is turned on. This light automatically turns off when the door is closed and the cycle starts.

- To manually turn the light on, press the **Drum Light** button.
- The drum light will turn off automatically after 4 minutes.

Child Lock
Use this function to disable the controls. This function can prevent children from changing cycles or operating the dryer.

- To unlock the Control Panel, press and hold the ✓ button for 3 seconds.

Cycle List Edit
Edit the list of dry programmes as desired.

1) Turn the knob to select the desired drying programme and press the ✓ button to include or exclude drying programmes.
   - If a drying programme is added, a check mark is displayed by that programme.
   - If a drying programme is deleted, the check mark is not displayed by that programme.
2) After selecting the programme, press the ↩ button to save it.

NOTE

- Some programmes cannot be deleted.
- The order of cycles in the list can be changed. On the product, use the **Cycle Optimization** function in the **More Settings** menu. In the **LG ThinQ** application, use the **Cycle Optimization** feature.

More Settings

1 Press the ⚙ **Settings** button.

2 Turn the knob to select **More Settings** and press the ✓ button.

3 Turn the knob to select the desired setting and press the ✓ button.

4 Turn the knob to select or change the setting and press the ✓ button to save the setting.

5 To return to the previous screen, press the ↩ button.

NOTE

- If no action is taken for several minutes after pressing the **More Settings** button, the display reverts to the main screen.

Wi-Fi Connection
Use to set up the Wi-Fi connection. When Wi-Fi is turned on, the Wi-Fi icon appears in the display.

Cycle Optimization
When activated, this feature automatically organizes the cycle list and options based on your usage patterns.

- The default setting is **On**.
- Selecting **Off** retains the current list order but deletes any customized options, restoring the default options.

Condenser Care
Use this to manually operate the **Condenser Care** cycle.

Sound
The volume of the notification sounds and button sounds can be set from quiet to very loud.

- Default volume is **Very High** and can be adjusted.
  - Volume : **Off**, **Low**, **Medium**, **High**, **Very High**

Language
Use this to change the language shown on the display.

Smart Diagnosis
Use this to help troubleshoot errors or malfunctions.

- See the **Smart Diagnosis** section for more details.

Factory Reset
Select this to delete all the stored data and initialize settings.

Using Dryer Rack

Rack Dry
This programme is designed for use with clothes that must be dried flat, without tumbling, including sweaters and delicate fabrics.

To use the programme, you need a dryer rack that is placed inside the appliance. Before drying, discard packing materials of the dryer rack.

NOTE

- Some models are not sold with all of the available accessories, you may need to purchase the dryer rack first if it was not provided with your model. Please contact LG Electronics Customer Information Centre or visit the LG Website at http://www.lg.com for purchase.

1 Open the door.

2 Insert the hook of dryer rack to the drum centre.

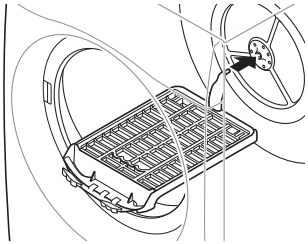

3 Once you have completed the fastening in the center hole of the drum, fasten the rack in three filter holes on each side of the filter.

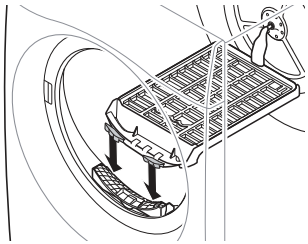

Look carefully at the filter hole and insert it. If you push the rack slightly inside the drum, it will fit better.

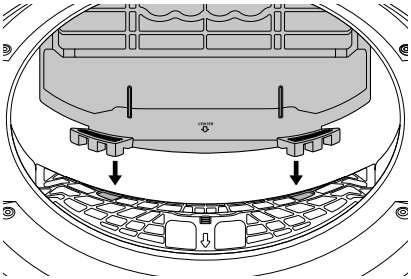

4 Place wet items on top of the rack. Allow space around items for air to circulate.

- The dryer rack does not move, but the drum will rotate.

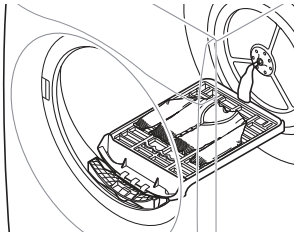

5 Close the door.

6 Turn power on and select **Rack Dry**.

7 Press the **Start/Pause** button.

NOTE

- Check the lint filter and remove any lint accumulated from items dried on the rack.
- The **Dry Time** key can be used to finely adjust the drying time.

Auto Condenser Cleaning

- This model is equipped with “Auto Condenser Cleaning”. It automatically cleans the condenser every specific number of times(about 30 times). Nevertheless, if you want to clean it, you can manually operate the cycle or you can clean it by yourself. Please refer to the page on condenser cleaning.

SMART FUNCTIONS

LG ThinQ Application

The **LG ThinQ** application allows you to communicate with the appliance using a smartphone.

LG ThinQ Application Features

Remote Start
Control the appliance remotely or check to see how much time is left in the cycle from the **LG ThinQ** application.

NOTE

- Once the remote control feature is enabled, you can start a cycle from the **LG ThinQ** application. If the cycle is not started, the appliance will wait to start the cycle until the appliance is turned off remotely or the remote control feature is disabled.
- If the door is opened, the remote control feature is disabled.

Smart Pairing
This function automatically selects the best cycle and settings for the dryer based on usage information about the most recently completed wash cycle.

NOTE

- To use this function, both washer and dryer must be connected to **LG ThinQ** application.

Smart Diagnosis
This function provides useful information for diagnosing and solving issues with the appliance based on the pattern of use.

Push Alert
When the cycle is complete or the appliance has problems, you will receive a push message.

Energy Monitoring*1
This feature keeps track of how the dryer's power consumption is affected by selected drying cycles and options.

Settings
Allows you to set various options on the appliance and in the application.

*1 This feature is only available on some models.

NOTE

- In the following cases, you must update the network information for each appliance in the **LG ThinQ** application under **Device Cards** > **Settings** > **Change Network**.
  - wireless router is changed
  - wireless router password is changed
  - Internet service provider is changed
- This information is current at the time of publication. The application is subject to change for product improvement purposes without notice to users.

Installing LG ThinQ Application and Connecting an LG Appliance

Models with QR Code

Scan the QR code attached to the product using the camera or a QR code reader app on your smartphone.

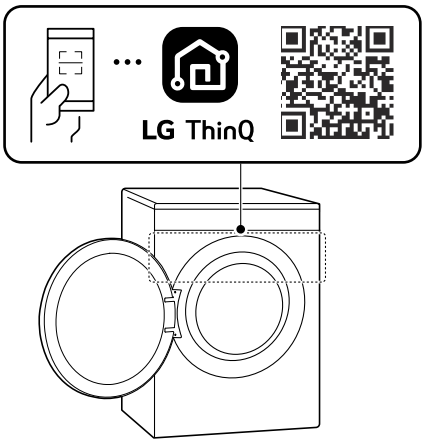

Models without QR Code

1 Search for and install the **LG ThinQ** app from the Google Play Store or Apple App Store on a smartphone.

2 Run the **LG ThinQ** app and sign in with your existing account or create an LG account to sign in.

3 Touch the add (+) button on the **LG ThinQ** app to connect your LG appliance. Follow the instructions in the app to complete the process.

NOTE

- You may be asked to provide a password to connect to the LG network (not your home network) during the Wi-Fi setup. The password is the last 4 characters of the network name, repeated twice, with no spaces. For example, if the network name appears as LG_XXXX_8b92, then you would enter 8b928b92 as your password. The password is case sensitive and the last 4 characters are unique to your appliance.
- To verify the Wi-Fi connection, check that the Wi-Fi icon on the control panel is lit.
- The appliance supports 2.4 GHz Wi-Fi networks only. To check your network frequency, contact your Internet service provider or refer to your wireless router manual.
- **LG ThinQ** is not responsible for any network connection problems or any faults, malfunctions, or errors caused by network connection.
- If the appliance is having trouble connecting to the Wi-Fi network, it may be too far from the router. Purchase a Wi-Fi repeater (range extender) to improve the Wi-Fi signal strength.
- The Wi-Fi connection may not connect or may be interrupted because of the home network environment.
- The network connection may not work properly depending on the Internet service provider.
- The surrounding wireless environment can make the wireless network service run slowly.
- If the appliance cannot be connected due to problems with the wireless signal transmission, unplug the appliance and wait about a minute before trying again.
- The wireless network name (SSID) should be a combination of English letters (A-Z) and numbers (0-9). Do not use special characters.
- Smartphone user interface (UI) may vary depending on the mobile operating system (OS) and the manufacturer.
- If the security protocol of the router is set to **WEP**, network setup may fail. Change the security protocol (**WPA2** is recommended) and connect the product again.

Activating Network Connection

1 Run the **LG ThinQ** application.

2 Select and touch the **Dryer** in the application.

3 Press the **Power** button on the control panel.

4 Press the ⚙ **Settings** button.

5 Turn the knob to select the **More Settings** and press the ✓ button.

6 Turn the knob to select the **Wi-Fi Connection** and press the ✓ button.

7 Select the **On** and press the ✓ button.
- When **Wi-Fi** is turned on, the **Wi-Fi** icon appears in the display.

Using the Appliance Remotely

Remote Start
Use a smartphone to control the appliance remotely. You can also monitor the cycle operation so you know how much time is left in the cycle.

Using Remote Start

1 Put the laundry into the drum and close the dryer door.

2 Press the **Power** button.

3 Press the **Remote Start** button.

4 Turn the knob to select **On** and press the ✓ button to enable the remote control function.

5 Start a cycle from the **LG ThinQ** application on your smartphone.

NOTE

- On Some Models:
  - Once this function is enabled, you can only start a cycle from the **LG ThinQ** smartphone application. If the cycle is not started, the appliance will wait to start the cycle until it is turned off remotely from the application or this function is disabled.
- If the door has been opened, you cannot start a cycle remotely.

Disabling Remote Start Manually
When this function is activated, press the **Remote Start** button and select **Off** to deactivate it.

Deactivating Network Connection

1 Press the **Power** button on the control panel.

2 Press the ⚙ **Settings** button.

3 Turn the knob to select **More Settings** and press the ✓ button.

4 Turn the knob to select **Wi-Fi Connection** and press the ✓ button.

5 Turn the knob to select **Off** button and press the ✓ button.

Radio Equipment Specifications

Type	Operating Frequency Range	Output Power (Max.)
Wireless LAN	2400 MHz - 2483.5 MHz	< 100 mW
Bluetooth*1		

*1 This feature is only available on some models.

For consideration of the user, this device should be installed and operated with a minimum distance of 20 cm between the device and the body.

Open Source Software Notice Information

To obtain the source code that is contained in this product, under GPL, LGPL, MPL, and other open source licenses that have the obligation to disclose source code, and to access all referred license terms and copyright notices, please visit https://opensource.lge.com.

LG Electronics will also provide open source code to you for a charge covering the cost of performing such distribution upon email request to opensource@lge.com.

This offer is valid to anyone in receipt of this information for a period of three years after our last shipment of this product.

Smart Diagnosis

Use this feature to help you diagnose and solve problems with your appliance.

NOTE

- For reasons not attributable to LGE's negligence, the service may not operate due to external factors such as, but not limited to, Wi-Fi unavailability, Wi-Fi disconnection, local app store policy, or app unavailability.
- The feature may be subject to change without prior notice and may have a different form depending on where you are located.

Using LG ThinQ to Diagnose Issues

If you experience a problem with your Wi-Fi equipped appliance, it can transmit troubleshooting data to a smartphone using the **LG ThinQ** application.

- Launch the **LG ThinQ** application and select the **Smart Diagnosis** feature in the menu. Follow the instructions provided in the **LG ThinQ** application.

Using Audible Diagnosis to Diagnose Issues

Follow the instructions below to use the audible diagnosis method.

- Launch the **LG ThinQ** application and select the **Smart Diagnosis** feature in the menu. Follow the instructions for audible diagnosis provided in the **LG ThinQ** application.

1 Press the **Power** button to turn on the appliance.

2 Press the **Settings** button.

3 Turn the knob to select the **More Settings** and press the ✓ button.

4 Turn the knob to select the **Smart Diagnosis** and press the ✓ button.

5 Place the mouthpiece of your smartphone close to the **Power** button and press the ✓ button.

- Hold the smartphone mouthpiece to the **Power** button until the data transfer is complete.

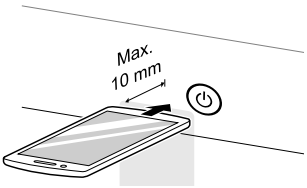

6 After the data transfer is complete, the appliance will turn off.

NOTE

- For best results, do not move the smartphone while the tones are being transmitted.

MAINTENANCE

⚠ WARNING

- Remove the power plug when you clean the appliance. Not removing the plug may result in electric shock.

Cleaning after Every Dry

Cleaning the Lint Filters

⚠ CAUTION

- Clean the lint filters in the proper way referring to the following instructions. Failure to do so, the lint that is accumulated on the heat exchanger may not be cleaned properly.
- When the lint drops into the filter inlet, it may cause less efficient drying performance and increase of drying time.

NOTE

- Unload all of the laundries from the appliance before pull out the lint filters.
- Put the lint filters back in place after cleaning. If the lint filters are not in the appliance, you can not operate the appliance.
- When cleaning the filters, the lint should be thrown in the trash and not washed through the drain in order to avoid spreading microplastics in the used water system.

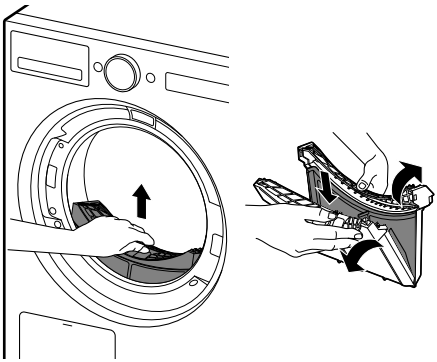

Inner Filter

- Always clean the inner filter before and after use.

Outer Filter

- Clean the outer filter after drying 10 times or when the lint is accumulated into the outer filter.

Clean the inner filter

1 Pull out the inner filter from the outer filter and then open the inner filter.

- Open the filter by unfolding it in the direction of the arrows.

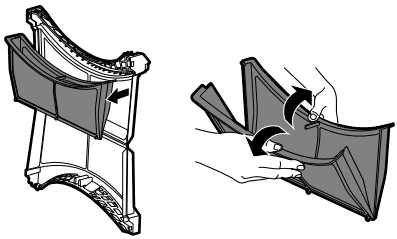

2 Remove large clusters of lint by hand, then use a vacuum cleaner to clean remaining lint.

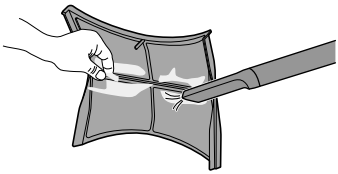

- Avoid using excessive force to prevent damaging the filter.
- Dry the filter completely if the filter is moist. Failure to do so, odour may occur in the appliance.
- Throw lint in the trash.

3 To remove lint completely, periodically rinse the lint filter under running water. Rinse into a paper coffee filter or other disposable filter to trap fine particles and prevent wastewater contamination.

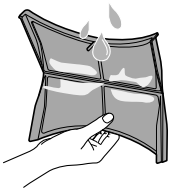

- Avoid using excessive force to prevent damaging the filter.
- Throw the disposable filter with lint in the trash.
- Dry the filter completely if the filter is moist. Failing to do so will cause odour to form in the appliance.

4 Insert the inner filter into the outer filter.

Clean the outer filter

1 Remove large clusters of lint by hand, then use a vacuum cleaner to clean remaining lint.

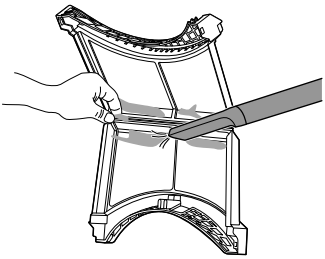

- Avoid using excessive force to prevent damaging the filter.
- Dry the filter completely if the filter is moist. Failure to do so, odour may occur in the appliance.
- Throw lint in the trash.

NOTE

- Ensure the side of the filter is closed properly. Failure to do so, any lint accumulated on the filter may get into the appliance and may cause degradation of the drying performance.

2 To remove lint completely, periodically rinse the lint filter under running water. Rinse into a paper coffee filter or other disposable filter to

trap fine particles and prevent wastewater contamination.

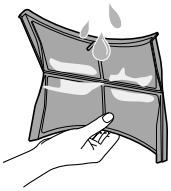

- Avoid using excessive force to prevent damaging the filter.
- Throw the disposable filter with lint in the trash.
- Dry the filter completely if the filter is moist. Failing to do so will cause odour to form in the appliance.

3 Insert the inner filter into the outer filter and close the outer filter.

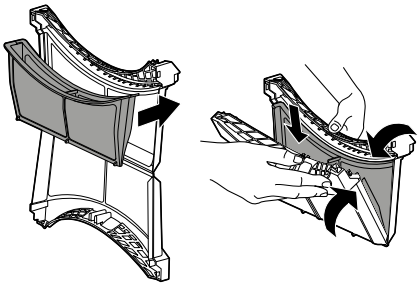

4 Reinsert the lint filter set to the dryer.

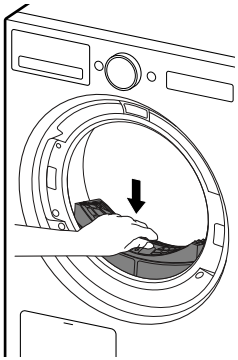

⚠ CAUTION

- Do not load or remove any clothes when the lint filter is not in place. The clothes can drop into the filter inlet and it may cause the appliance to malfunction.

Emptying the Water Container

Condensed water is collected in the water container.

Empty the water container after every use. Not doing so will affect the drying performance.

NOTE

- In some instance, LCD window may display empty water to inform you that the water container is full. If this occurs, empty the water container.
- If the appliance does not have an optional drain hose connected, the water container should be emptied. When the condensed water is drained out directly through the optional drain hose, there is no need to empty the water container.

1 Pull out the water container.

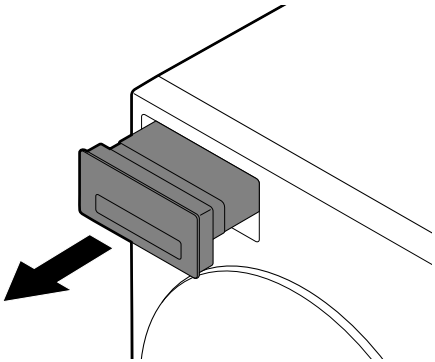

2 Empty the water container into the sink.

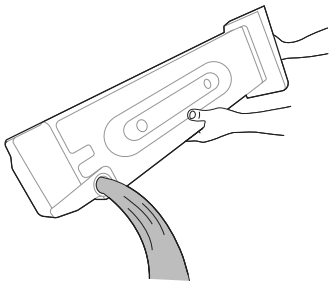

⚠ CAUTION

- Do not drink the condensed water or reuse it. It could be lead to health problems for people and animals.

3 Refit it back into the appliance.
   - Push in the water container fully into the appliance until it is in place.

4 Press the **Start/Pause** button.

Cleaning the Appliance Periodically

Wiping the Moisture Sensor

This device senses the moisture level of the clothes during operation, which means it must be cleaned **once every six months** to remove any build-up of lime scale on the surface of the sensor.

Wipe the sensors inside the drum.

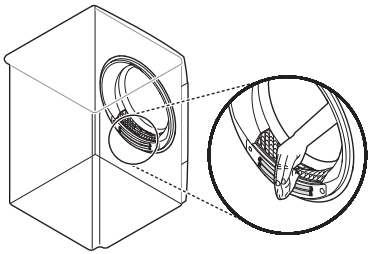

⚠ CAUTION

- Do not wipe the moisture sensor with abrasive materials. Always clean the sensor with a dry rough acrylic sponge.

Using Drum Clean Feature

With time and use, the appliance may form unpleasant odours that leave your clothes smelling after drying. Using this cleaning function **once a month (or after drying 30 times)** helps to reduce the unpleasant odours from the appliance.

⚠ CAUTION

- Remove all of the clothes from the appliance.

1 Pull out the water container, empty the condensed water from it and refit the water container back into the appliance.

2 Turn on the appliance.

3 Press the **Drum Care** button.

4 Press the **Start/Pause** button.
   - This function operates for about 3 hours.

5 Empty the water container after the function has finished.

NOTE

- When the optional drain hose is installed, there is no need to empty the water container.

6 Open the dryer's door to provide the appliance with enough air circulation for exhausting any remaining odours.

⚠ WARNING

- For safety reasons, do not allow children or animals to enter the appliance. It may cause damage or injury.

Cleaning the Condenser

This model is equipped with "Auto Condenser Cleaning". However, if you want to clean the condenser manually, follow the instructions in this manual.

⚠ CAUTION

- To avoid physical injury and burns, do not touch or clean the condenser with bare hands.
- When cleaning the condenser, be careful not to damage the fins.

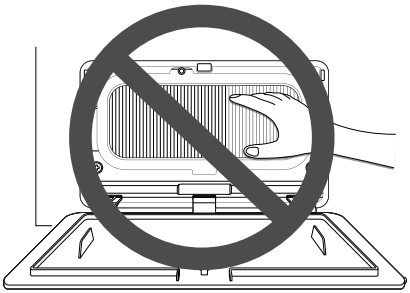

NOTE

- If drying performance deteriorates, open the condenser cover to check for foreign substances or lint build up.

1 Press the top part of the access panel ❶ to open it.

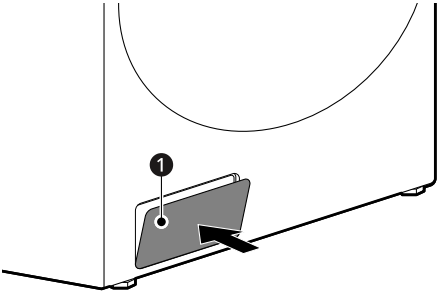

2 Turn the locks ❷ to release the condenser cover, and pull the cover to remove it.

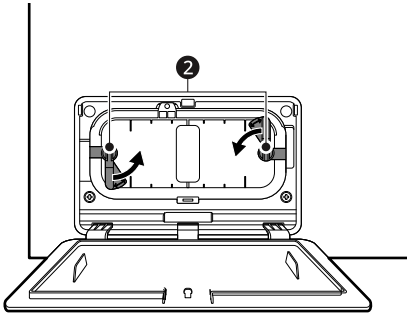

3 Clean the dust on the condenser using a vacuum cleaner or soft brush. Apply only gentle pressure and clean in a vertical direction so as not to damage the fins.

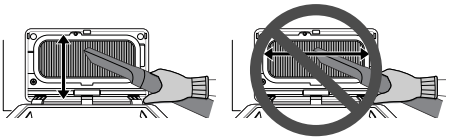

4 Fit the cover with the hole below.

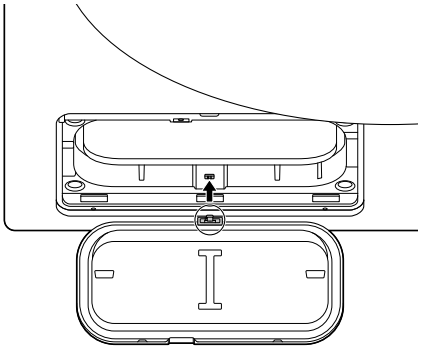

5 Reinsert and reassemble the condenser cover completely.

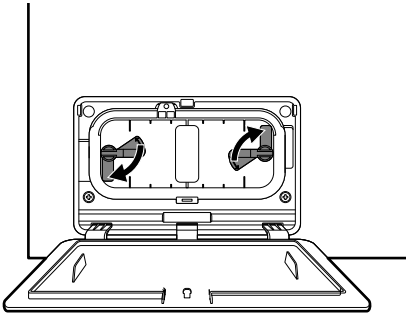

⚠ CAUTION

- If the condenser cover is not completely reassembled, the product will not work properly and may leak onto the floor during operation.

6 Close the access panel.

TROUBLESHOOTING

Errors and malfunctions may occur when operating the appliance. The following tables contain possible causes and notes for resolving an error message or malfunction. Read the tables below carefully in order to save time and money before calling the LG Electronics service centre.

Before Calling for Service

Your appliance is equipped with an automatic error-monitoring system to detect and diagnose problems at an early stage. If the appliance does not function properly or does not function at all, check the following tables before calling to LG Electronics service centre.

Error Messages

Symptoms	Possible Cause & Solution
Temperature sensor error	**Temperature sensor has malfunctioned.** • Unplug the power plug and call for service.
No drainage	**The drain pump motor has malfunctioned.** • Unplug the appliance and call for service.
Door open	**The door has been opened while the appliance is in operation or the appliance is being operated without the door being closed properly.** • Close the door completely. • If the error is displayed continuously, call for service.
Door unlocked	**The door is not secured.** • Close and secure the door. If the message keeps appearing, unplug the power cord and call for service.
Drum motor error	**The motor has stopped suddenly.** • Check if the amount of clothes exceeds the maximum load capacity. • Unplug the power plug and call for service.
Compressor error	**The compressor has stopped suddenly.** • Unplug the power plug and call for service.
Drum temperature error	**The temperature inside the drum has risen suddenly.** • Unplug the power plug and call for service.
Voltage abnormality	**Supply voltage is not correct.** • Unplug the appliance. If error reoccurs, call for service.
Service cover error	**The appliance is being operated without the Inner Service cover.** • Open the **Outer Service Cover** and assemble the **Inner Service Cover**.
Reinstall the filter.	**The lint filter is not in the appliance.** • Insert the lint filter.

Operation

Symptoms	Possible Cause & Solution
Appliance will not turn on.	**Power cord is not properly plugged in.** • Make sure that the power plug is securely plugged into a grounded outlet matching the appliance's rating plate.
	House fuse is blown, circuit breaker has tripped, or power outage has occurred. • Reset circuit breaker or replace fuse. Do not increase fuse capacity. If the problem is a circuit overload, have it corrected by a qualified electrician.
Appliance does not heat.	**House fuse is blown, circuit breaker has tripped, or power outage has occurred.** • Reset circuit breaker or replace fuse. Do not increase fuse capacity. If the problem is a circuit overload, have it corrected by a qualified electrician.
Water leaks.	**The water container hose or the optional drain hose is not connected correctly.** • Connect the water container hose or the optional drain hose correctly.
	The door is closed while clothes or foreign substance is caught in the door. • Check if clothes or foreign substance is caught in the door before using the appliance. If water leaks continuously, contact the LG Electronics Customer Information Centre.
Appliance runs and pauses by itself after the drying cycle finishes.	**This is how the Anti Crease option works.** • Make sure that the **Anti Crease** option has been set. The option is designed to prevent creases that are formed when the clothes are not unloaded promptly after the drying cycle. When the option is set, the appliance runs for 10 seconds and pauses for 5 minutes. The option is works for up to 2 hours.

Performance

Symptoms	Possible Cause & Solution
Clothes take too long to dry.	**Load is not properly sorted.** • Separate heavy items from lightweight items. Larger and heavier items take longer to dry. Light items in a load with heavy items can fool the sensor because the light items dry faster.
	Large load of heavy fabrics. • Heavy fabrics take longer to dry because they tend to retain more moisture. To help reduce and maintain more consistent drying times for large and heavy fabrics, separate these items into smaller loads of a consistent size.

Symptoms	Possible Cause & Solution
Clothes take too long to dry.	**Appliance controls are not set properly.** • Use the appropriate control settings for the type of load you are drying. Some loads may require an adjustment of the dry level setting for proper drying.
	Lint filter needs to be cleaned. • The appliance displays a filter cleaning message before and after the cycle operation. “Clean the filter to start the cycle”, “Clean inner and outer filters to start cycle” • Remove the lint from the lint filter before every cycle. With the lint removed, hold the lint filter up to a light to see if it is dirty or clogged. With some loads that produce high amounts of lint, such as new bath towels, it may be necessary to pause the cycle and clean the filter during the cycle.
	House fuse is blown, circuit breaker has tripped, or power outage has occurred. • Reset circuit breaker or replace fuse. Do not increase fuse capacity. If the problem is a circuit overload, have it corrected by a qualified electrician.
	Appliance is overloaded. • Divide extra large loads into smaller loads for better drying performance and efficiency.
	Appliance is underloaded. • If you are drying a very small load, add a few extra items to ensure proper tumbling action. Drying too few clothes or drying too many clothes may result in the cycle ending with clothes that are not fully dry. In this case, you can dry them additionally by setting the desired time in the timed drying programmes.
Drying time is not consistent.	**Heat settings, load size, or dampness of clothing is not consistent.** • The drying time for a load will vary depending on the type of heat used (electric), the size of the load, the type of fabrics, the wetness of the clothes, and lint filter. Even an unbalanced load in the appliance can cause poor spinning, resulting in wetter clothes which will take longer to dry.
Greasy or dirty spots are left on clothes.	**Fabric softener is used incorrectly.** • When washing clothes that are to be dried in the appliance, use the correct amount of fabric softener as recommended by the manufacturer of the fabric softener.
	Clean and dirty clothes are being dried together. • Use the appliance to dry only clean items. Soil from dirty clothes can transfer to the clean clothes in the same or later loads.

Symptoms	Possible Cause & Solution
Greasy or dirty spots are left on clothes.	**Clothes were not properly cleaned or rinsed before being placed in the appliance.** • Stains on dried clothes could be stains that were not removed during the washing process. Make sure that clothes are being completely cleaned or rinsed according to the instructions for your washing machine and detergent. Some difficult soils may require pre-treating prior to washing.
Clothes are wrinkled.	**Clothes have dried too long (overdried).** • Over drying a load of clothes can lead to wrinkled clothes. Try a shorter drying time.
	Clothes have been left in the appliance for too long after cycle ends. • Use the **Anti Crease** option.
Clothes are shrinking.	**Garment care instructions are not being followed.** • To avoid shrinking your clothes, always consult and follow fabric care instructions. Some fabrics will naturally shrink when washed. Other fabrics can be washed but will shrink when dried in the appliance. Use a low or no heat setting.
Lint is left on clothes.	**Lint filter has not been cleaned properly.** • Remove the lint from the lint filter after every cycle. With the lint removed, hold the lint filter up to a light to see if it is dirty or clogged. If it looks dirty, follow the cleaning instructions. With some loads that produce high amounts of lint, it may be necessary to clean the lint filter during the cycle.
	Clothes have not been sorted properly. • Some fabrics are lint producers (i.e., a fuzzy white cotton towel) and should be dried separately from clothes that are lint trappers (i.e., a pair of black linen pants).
	Appliance is overloaded. • Divide extra large loads into smaller loads for drying.
	Tissue, paper, etc., has been left in pockets. • Check pockets thoroughly before drying clothes.
Excess static in clothes after drying.	**Clothes have dried for too long (overdried).** • Overdrying a load of clothes can cause a buildup of static electricity. Adjust settings and use a shorter drying time.
	Drying synthetics, permanent press, or synthetic blends. • These fabrics are naturally more prone to static buildup. Try using fabric softener, or use shorter time settings.

Symptoms	Possible Cause & Solution
Clothes have damp spots after a Dry programme.	**Very large load or very small load. Single large item such as a blanket or comforter.** • If items are too tightly packed or too sparse the sensor may have trouble reading the dryness level of the load. Use timed drying programmes for very small loads. • Large, bulky items such as blankets or comforters can sometimes wrap themselves into a tight ball of fabric. The outside layers will dry and register on the sensors, while the inner core remains damp. When drying a single bulky item, it may help to pause the cycle once or twice and rearrange the item to unwrap and expose any damp areas. • To dry a few remaining damp items from a very large load or a few damp spots on a large item after a Dry programme has completed, empty the lint filter, then set timed drying programmes to finish drying the item(s).

Odours

Symptoms	Possible Cause & Solution
The appliance has an odour.	**Are you using the appliance for the first time?** • The smell is caused by rubber material that is attached to the appliance inside. This kind of smell is a rubber's own smell and disappears automatically after using the appliance several times.
	Do you smell an odour during use? • Do not exceed the manufacturer's recommended amount of detergent when washing clothes. Excess detergent can build up on clothing and cause odours. • Leaving clothes in the washer or dryer after the cycle ends can lead to odors. Unload clothing promptly when the cycle ends. • Keep lint filters clean. Clogged or dirty lint filters can cause odors. After cleaning the lint filter, allow it to dry completely before using it. • For ventless models, leave the dryer door open after drying, or use the magnetic door stop (on some models) to keep the door slightly ajar. • If the odor is coming from the washer, follow the instructions in the product manual to clean the washer tub/drum. • Periodically run the Drum Care and Condenser Care cycles following the instructions in the **MAINTENANCE** section.

Wi-Fi

Symptoms	Possible Cause & Solution
Your home appliance and smartphone is not connected to the Wi-Fi network.	**The password for the Wi-Fi that you are trying to connect to is incorrect.** • Find the Wi-Fi network connected to your smartphone and remove it, then register your appliance on **LG ThinQ**.
	Mobile data for your smartphone is turned on. • Turn off the **Mobile data** of your smartphone and register the appliance using the Wi-Fi network.
	The wireless network name (SSID) is set incorrectly. • The wireless network name (SSID) should be a combination of English letters (A-Z) and numbers (0-9). Do not use special characters.
	The router frequency is not 2.4 GHz. • Only a 2.4 GHz router frequency is supported. Set the wireless router to 2.4 GHz and connect the appliance to the wireless router. To check the router frequency, check with your Internet service provider or the router manufacturer.
	The appliance is too far from the router. • If the appliance is too far from the router, the signal may be weak and the connection may not be configured correctly. Move the location of the router so that it is closer to the appliance.

Memo

Memo

