Scan the QR code to see the manual.

OWNER'S MANUAL

LIGHTWAVE OVEN SolarDOM™

Before beginning installation, read these instructions carefully. This will simplify installation and ensure that the product is installed correctly and safely. Leave these instructions near the product after installation for future reference.

ENGLISH

MFL72149804
Rev.00_111125

www.lg.com

Copyright © 2025 LG Electronics. All Rights Reserved

TABLE OF CONTENTS

This manual may contain images or content that may be different from the model you purchased.

This manual is subject to revision by the manufacturer.

IMPORTANT SAFETY INSTRUCTIONS

READ CAREFULLY AND KEEP FOR FUTURE REFERENCE 3
WARNING 3
CAUTION 9

INSTALLATION

Product Overview 13
Installation Requirements 15

OPERATION

Control Panel 16
Before Use 16
Quick Start 19
Manual Cooking 19
Auto Cooking Mode 22
Utensils Guide 32
Cooking Guide 33

SMART FUNCTIONS

LG ThinQ Application 35
Smart Diagnosis 36

TROUBLESHOOTING

FAQs 38
Before Calling for Service 39

IMPORTANT SAFETY INSTRUCTIONS

READ CAREFULLY AND KEEP FOR FUTURE REFERENCE

The following safety guidelines are intended to prevent unforeseen risks or damage from unsafe or incorrect operation of the appliance. The guidelines are separated into '**WARNING**' and '**CAUTION**' as described below.

Safety Messages

⚠	This symbol is displayed to indicate matters and operations that can cause risk. Read the part with this symbol carefully and follow the instructions in order to avoid risk.
⚠	**WARNING** This indicates that the failure to follow the instructions can cause serious injury or death.
⚠	**CAUTION** This indicates that the failure to follow the instructions can cause the minor injury or damage to the appliance.
♨	This symbol is displayed to alert that hot surface. Do not touch surfaces during use in order to prevent burn hazard.

WARNING

⚠ WARNING

- To reduce the risk of explosion, fire, death, electric shock, injury or scalding to persons when using this product, follow basic precautions, including the following:

Technical Safety

- This appliance can be used by children aged from 8 years and above and persons with reduced physical, sensory or mental capabilities or lack of experience and knowledge if they have been given supervision

or instruction concerning use of the appliance in a safe way and understand the hazards involved. Children shall not play with the appliance. Cleaning and user maintenance shall not be made by children without supervision.

- This appliance is not intended for use by persons (including children) with reduced physical, sensory or mental capabilities, or lack of experience and knowledge, unless they have been given supervision or instruction concerning use of the appliance by a person responsible for their safety. Children should be supervised to ensure that they do not play with the appliance.
- To reduce the risk of burns, electric shock, fire, injury to persons or exposure to excessive microwave energy when using the microwave oven, read all instructions before using the appliance.
- During use the appliance becomes hot. Care should be taken to avoid touching heating elements inside the oven. Children less than 8 years of age shall be kept away unless continuously supervised.
- Accessible parts can become hot during use. Young children should be kept away.
- Do not attempt to tamper with, or make any adjustments or repairs to the door , door seals, control panel, safety interlock switches or any other part of the oven which would involve the removal of any cover protecting against exposure to microwave energy.
- Only qualified service person from LG Electronics service centre should disassemble, repair, or modify the appliance.
- It is hazardous for anyone other than a competent person to carry out any service or repair operation that involves the removal of a cover which gives protection against exposure to microwave energy.
- Unlike other appliances, the microwave oven is a high-voltage and a high electrical-current piece of equipment. Improper use or repair could result in harmful exposure to excessive microwave energy or in electric shock.
- If the door or door seals are damaged, the oven must not be operated until it has been repaired by a competent person.
- Do not use your microwave oven to cook eggs in the shell. Pressure can build up inside the shell, causing it to burst.

- Liquids and other foods must not be heated in sealed containers since they are liable to explode. Remove the plastic wrapping from food before cooking or defrosting. Note though that in some cases food should be covered with plastic film, for heating or cooking.
- Do not use harsh abrasive cleaners or sharp metal scrapers to clean the oven door glass, since they can scratch the surface, which can result in shattering of the glass.
- The microwave oven must not be placed in a cabinet. The microwave oven is intended to be used free-standing.
- Keep the appliance and its cord out of reach of children less than 8 years.
- The appliance is not intended to be operated by means of an external timer or separate remote-control system.
- This appliance should not be used for commercial catering purposes. This appliance is intended to be used in household and similar applications such as:
  - Staff kitchen areas in shops, offices and other working environments;
  - Farm house;
  - By clients in hotels, motels and other residential environments;
  - Bed and breakfast type environments.
- Do not install this appliance inside mobile vehicles (camping cars).
- When heating food in plastic or paper containers, keep an eye on the oven due to the possibility of ignition.
- The contents of feeding bottles and baby food jars shall be stirred or shaken and the temperature checked before consumption, in order to avoid burns.
- Only use utensils that are suitable for use in microwave ovens. They may heat-up and char.
  - Remove metal twist ties before using the appliance.
  - Do not use wooden containers and ceramic containers that have metallic (e.g. gold or silver) inlays.

- Metallic containers for food and beverages are not allowed during microwave cooking. Metal objects in particular may arc in the oven, which can cause serious damage.

- Ensure that the cavity does not contain any items or utensils that are not suitable for the use with the microwave oven before you operate the appliance.
- Do not use the cavity for storing combustible products, cooking utensils, or food and similar when the microwave oven is not in use.
- The microwave oven is intended for heating food and beverages. Drying of food or clothing and heating of warming pads, slippers, sponges, damp cloth and similar can lead to risk of injury, ignition or fire.
- If smoke is observed (or emitted), switch off or unplug the appliance and keep the door closed in order to stifle any flame.
- Only use the temperature probe recommended for this oven.
  - You can not ascertain that the temperature is accurate with an unsuitable temperature probe.
  - This model does not provide a temperature probe.
- When heating liquids, e.g. soups, sauces and beverages in your microwave oven,
  - Avoid using straight sided containers with narrow necks.
  - Do not overheat.
  - Stir the liquid before placing the container in the oven and again halfway through the heating time.
  - Be careful when handling the container.

    Microwave heating of beverages can result in delayed eruptive boiling, therefore care must be taken when handing the container.
  - After heating, let it stand in the appliance for a short time; stir or shake it again carefully and check the temperature of it before consuming to avoid burns (especially, contents of feeding bottles and baby food jars).
- The oven should be cleaned regularly and any food deposits removed. Failure to maintain the oven in a clean condition could lead

to deterioration of the surface that could adversely affect the life of the appliance and possibly result in a hazardous situation.

- Cleaning and user maintenance shall not be made by children unless they are aged from 8 years and above and supervised.
- The appliance shall not be cleaned with a steam cleaner.
- Steam cleaner is not to be used.
- During use the appliance becomes hot. Care should be taken to avoid touching heating elements inside the oven.
- Only allow children to use the oven without supervision when adequate instructions have been given so that the child is able to use the oven in a safe way and understands the hazards of improper use.

Installation

- Ensure that the outlet socket is properly grounded, and that the earth pin on the power cord is not damaged or removed from the power plug. For more details on grounding, inquire at an LG Electronics customer information centre.
- This appliance must be earthed. The wires in the mains lead are coloured in accordance with the following codes:
  - BLUE: Neutral
  - BROWN: Live
  - GREEN and YELLOW: Earth
- As the colours of the wires in the mains lead of this appliance may not correspond with the coloured markings identifying the terminals in your plug proceed as follows:
  - The wire which is coloured BLUE must be connected to the terminal which is marked with the letter N or coloured BLACK.
  - The wire which is coloured BROWN must be connected to the terminal which is marked with the letter L or Coloured RED.
  - The wire which is coloured GREEN & YELLOW or GREEN must be connected to the terminal which is marked with the letter G or earth symbol.

⏚ Earth symbol

- This appliance incorporates an earth connection for functional purposes.
- If the supply cord is damaged, it must be replaced by the manufacturer, its service agent of similarly qualified persons in order to avoid a hazard. Improper use may cause serious electric damage.
- The appliance is supplied from a cord extension set or an electrical portable outlet device, the cord extension set on electrical portable outlet device must be positioned so that it is not subject to splashing or ingress of moisture.
- If the power cord is damaged or the hole of the outlet socket is loose, do not use the power cord and contact an authorized service centre.
- The appliance must not be installed behind a decorative door in order to avoid overheating.

Operation

- Children should not allow to play with accessories or hang down from the door or any part of the appliance.
- When the appliance is operated in the combination mode, children should only use the appliance under adult supervision due to the temperatures generated.
- Never operate the appliance when it is empty. Food or water should always be in the appliance during operation to absorb the microwave energy.
- Do not operate your appliance if it is damaged. It is particularly important that the oven door closes properly and that there is no damage to the: (1) door (bent), (2) hinges and latches (broken or loosened), (3) door seals and sealing surfaces. It could result in harmful exposure to excessive microwave energy.
- Do not use the appliance for the purpose of dehumidification. (ex. Operating the microwave oven with wet newspapers, clothes, toys, electric devices, pet or child etc.) It can be the cause of serious

damage to safety such as a fire, a burn or a sudden death due to an electric shock.

- Be certain to use proper accessories on each operation mode. Improper use could result in damage to your appliance and accessories, or could make spark and a fire.

CAUTION

⚠ CAUTION

- To reduce the risk of injury to persons, malfunction, or damage to the product or property when using the appliance, follow basic safety precautions, including the following:

Installation

- Install the appliance according to the installation requirements that are in this manual.
- Allow at least 8 cm from the front of the oven door to avoid accidental tipping of the appliance.
- The turntable must always be in place when you operate the appliance.
- Do not block an exhaust outlet that is located on the top, bottom or side of the appliance.
- Do not place any object (such as kitchen towels, napkins, etc.) between the appliance front face and the door.
- In order to avoid a hazard due to inadvertent resetting of the thermal cut-out, this appliance must not be supplied through an external switching device, such as a timer, or connected to a circuit that is regularly switched on and off by the utility.

Operation

- Do not touch the appliance (including the oven door, outer cabinet, rear cabinet, oven cavity, accessories and dishes) during grill mode, convection mode and auto cook operations. The temperature of

accessible surfaces may be high when the appliance is operating. There is the danger of a burn unless wearing thick culinary gloves.

- Do not place an object(a book, a box, water bottle, vase etc.) on the appliance. The appliance may overheat or catch fire or the object may fall, causing injury to persons.
- Do not operate the appliance with the door open. It could result in harmful exposure to excessive microwave energy.
- Set the cooking times correctly. The small amounts of food require shorter cooking or heating time. Over cooking may result in the food catching on fire and subsequent damage to your appliance.
- Do not use recycled paper products. They may contain impurities which may cause sparks or fires when used in cooking.
- Do not cook food wrapped in paper towels or newspaper, unless your cook book contains instructions for the food you are cooking.
- Do not use newspaper in place of paper towels for cooking.
- Do not use the appliance to dry newspapers or clothes. They may catch fire.
- Do not cook eggs in their shell. Eggs in their shell and whole hard-boiled eggs should not be heated in microwave ovens since they can explode, even after microwave heating has ended. Pressure will build up inside the egg which will burst.
- Do not attempt deep fat frying in your appliance. This could result in a sudden boil over of the hot liquid.
- Pierce the skin of potatoes, apples or any such fruit or vegetables before cooking. They could burst.
- If smoke is observed (or emitted), switch off or unplug the appliance and keep the door closed in order to stifle any flame.
- Follow exact directions given by each manufacturer for their popcorn product.
  - Never use a brown paper bag for popping corn.
  - Never attempt to pop leftover kernels.
  - Do not leave the appliance unattended while the corn is being popped.

- If corn fails to pop after the suggested times, discontinue cooking.
- Overcooking could result in the corn catching a fire.

- The power connection may be achieved by having the plug accessible or by incorporating a switch in the fixed wiring in accordance with the wiring rules. Using improper plug or switch can cause an electric shock or a fire.
- All air vents should be kept clear during cooking. If air vents are covered during appliance operation the appliance may overheat.

Maintenance

- If it is necessary to take precautions during user maintenance, appropriate details shall be given.
- Do not rinse containers, tray and rack by placing them in water immediately after cooking.
- Unplug the power plug and allow it to cool before cleaning.
- Always use gloves when removing food and accessories after cooking as the oven and accessories will be very hot.
- Allow the turntable to cool before removing it from the appliance.
- Do not allow food or cleaner residue to accumulate on sealing surfaces of the appliance.
- Keep the inside and outside of the appliance clean.

Cleaning

Keep the oven clean inside and outside. Take special care to keep the inner door panel and the front frame free of food or grease build-up. Clean your oven weekly or more often, if needed.

- Abrasive cleansers, steel wool pads, gritty wash cloths, some paper towels, etc., can damage the control panel and the interior and exterior of the oven.

Cleaning the Interior

Use a damp cloth to clean the surfaces of the door and wipe out crumbs between the door and the frame. Remove greasy spatters with a soapy cloth then rinse and dry.

- Wipe spatters immediately with a wet paper towel, especially after cooking chicken or bacon.
- If steam accumulates inside or outside of the oven door, wipe the panels with a soft cloth.

Cleaning the Exterior

Clean the outside of the oven with soap and water. Rinse with clean water and dry with a soft cloth or paper towel.

- Do not allow the water to seep into the ventilation openings to prevent damage to the operating parts inside the oven.
- The door and door seals should be kept clean. Use only warm, soapy water, rinse then dry thoroughly.
- Frequently wipe metal parts with a damp cloth.

Cleaning the Control Panel

Open the door to prevent the oven from accidentally starting. Wipe with a damp cloth followed immediately by a dry cloth. Press **STOP** or **STOP/Clear** after cleaning.

INSTALLATION

Product Overview

The appearance or components of the appliance may differ from model to model.

Front View

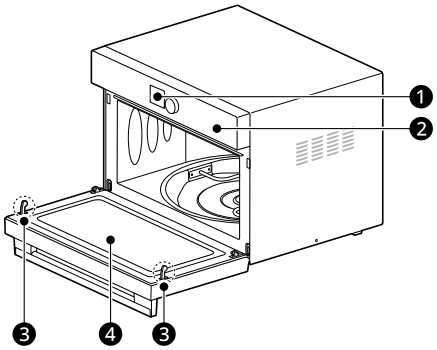

❶ Display

❷ Control Panel

❸ Safety Door Lock System

❹ Window

⚠ WARNING

- Do not operate the oven when it is empty or without the metal tray. It is best to leave a glass of water in the oven when not in use. The water will safely absorb all microwave energy, if the oven is accidentally started.

⚠ CAUTION

- To avoid risk of personal injury or property damage, do not use stoneware, metal cookware, or metal rimmed cookware in the oven.

NOTE

- Do not remove the mica sheet from the inside cavity of the oven. It is there to protect the microwave components from food spatters.

Accessories

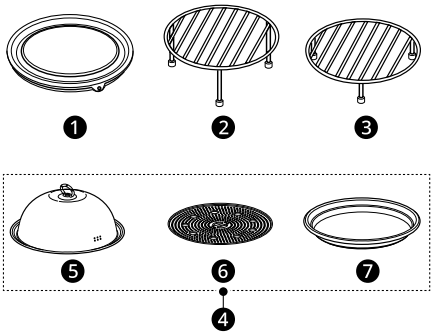

❶ Metal Tray

❷ High Rack

❸ Low Rack

❹ Steamer

❺ Steam Cover

❻ Steam Plate

❼ Steam Water Bowl (Crisp tray)

Accessories Guide

	Microwave	Grill	Convection/ Dehydrate/ Proof	Air Fry	Steam
Metal Tray	O	O	O	O	O
High Rack	△	O	△	O	X
Low Rack	O	△	O	△	O
Steamer	O	X	X	X	O

- O: Acceptable
- △: Use with care
- X: Not Acceptable

⚠ CAUTION

- Do not use the microwave oven without the metal tray.
- Be certain to use proper accessories on each operation mode. Improper use could result in damage to your oven and accessories, or could make spark and a fire.

Specifications

Power supply and power consumption may vary depending on the model purchased. Refer to the labels for details.

MA3885* Model**

- **Microwave Output**: 900 W*1
- **Frequency**: 2450 MHz*2
- **Dimensions (W x H x D)**: 537 mm x 395 mm x 530 mm
- **Power Supply**: 230 V~ 50 Hz
- **Power Consumption**: Microwave 1650 W, Grill Max. 1600 W, Combination Max. 2350 W, Convection 2300 W

*1 IEC 60705 RATING STANDARD. Specifications are subject to change without prior notice.

*2 Microwave Frequency: 2450 MHz +/- 50 MHz (Group 2 / Class B)

Group 2 equipment: group 2 contains all ISM RF equipment in which radio-frequency energy in the frequency range 9 kHz to 400GHz is intentionally generated and used or only used, in the form of electromagnetic radiation, inductive and /or capacitive coupling, for the treatment of material or inspection/analysis purposes.

Class B equipment is equipment suitable for use in domestic dwellings and domestic dwellings directly connected to a low voltage power supply network which supplies buildings used for domestic purposes.

NOTE

- When operating at 100% and 80% power levels for prolonged periods, the output power will be reduced gradually to help prevent the unit from electrically overheating.
- This oven should not be used for commercial catering purposes.

Installation Requirements

Installation Location

1 Place the microwave oven on a flat surface with more than 85 cm height.
- The front of the oven should be at least 8 cm from the edge of the surface to prevent tipping.

2 Allow at least 20 cm from the top, 20 cm from the sides, and 20 cm back of the oven for proper ventilation.
- Free airflow around the oven is important.
- An exhaust outlet is located on bottom or side of the oven. If you use the microwave oven in an enclosed space or cupboard, the air flow for cooling the product could be worse. It may result in lower performance and reduced service life.

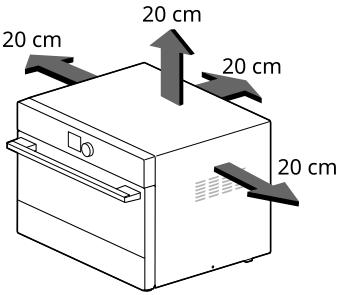

3 Place the metal tray inside the oven.

4 Insert the power plug into an outlet.
- Do not block the outlet to prevent damage the oven.
- Make sure the microwave oven is the only appliance connected to the socket.
- If your oven does not operate properly, unplug it from the electrical socket and then plug it back in.

NOTE

- Do not place oven above a gas or electric range.

Radio Frequency Interference

- When operating the microwave oven, If you use a product such as radio, TV, wireless LAN, Bluetooth, medical equipment, wireless equipment etc.
- Using the same frequency as the microwave oven, the product may receive interference from these products. This interference does not indicate a problem of the microwave or the product and is not a malfunction. Therefore, it is safe to use. However, medical equipment may receive interference as well, so use caution when using medical equipment near the product.

OPERATION

Control Panel

Control Panel Features

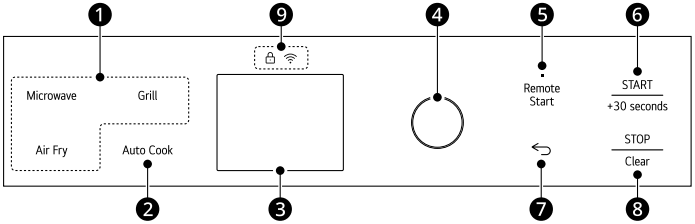

❶ **Manual Cook Mode**

Select a cooking mode for the Microwave, Grill, Air Fry mode.

❷ **Auto Cook Mode**

Press the buttons to select preprogrammed cook for popular food items.

❸ **Display**

- Shows the time of day, cooking time settings, and selected cooking functions.
- The guide is displayed at the bottom of the screen.

❹ **Control/Function Dial**

- Set cooking time, temperature, weight and cooking categories.
- Press this button to select desired function or to start cooking.

❺ **Remote Start**

If the appliance is connected to a home Wi-Fi network, some modes can be started using the **LG ThinQ** smartphone application.

❻ **START/+30 seconds**

- Start cooking which is selected, press this button.
- In the cooking start screen, press this button to set 30 seconds intervals of cooking.

❼ **Back**

Press this button to return to the previous screen.

❽ **STOP/Clear**

Press once to pause the currently running function and press twice to cancel it.

❾ **Indicator icon**

Icon	Indication
	Wi-Fi Icon • Appears when oven is connected to Wi-Fi.
	Lock Icon • Appears when **Child Lock** is on.

NOTE

- A beep sounds each time you press a key. A melody signals the end of a timer or a cooking cycle.
- This oven has a built-in safety interlocks to prevent exposure to excessive microwave energy. The oven will automatically turn off any cooking when the door is opened.

Before Use

Microwave Power Levels

This microwave oven is equipped with 5 power levels to give you maximum flexibility and control

over cooking. See the table for suggested power levels for various foods.

Power Level	Use
High 900 W	• Boiling water. • Cooking poultry pieces, fish, vegetables, and tender cuts of meat.
720 W	• All reheating. • Roasting meat and poultry. • Cooking mushrooms and shellfish. • Cooking foods containing cheese and eggs.
540 W	• Baking cakes and scones. • Preparing eggs. • Cooking custard. • Preparing rice, soup.
360 W	• All thawing. • Melting butter and chocolate. • Cooking less tender cuts of meat.
180 W	• Softening butter and cream cheese. • Softening ice cream. • Raising yeast dough.

Child Lock

Use this safety feature to lock the control panel and prevent the oven from being turned on when cleaning the oven or prevent children from unsupervised use of the oven.

Setting Child Lock to ON

1 Select **Settings** by turning the dial and press the dial or **START**.

2 Select **Child Lock** by turning the dial and press the dial or **START**.

3 Select **On** by turning the dial and press the dial or **START**.
- When **Child Lock** is turned on, the lock icon turns on.

Cancelling Child Lock

1 Press any key or dial while **Child Lock** is on.

2 A popup screen appears. Press and hold **STOP/ Clear** for 3 seconds.
- The lock icon turns off.

Setting Up Wi-Fi

Connect the appliance to a home Wi-Fi network to use Remote Start and other smart functions. See the Smart Functions section for more details.

1 Select **Settings** by turning the dial and press the dial or **START**.

2 Select **Wi-Fi** by turning the dial and press the dial or **START**.

3 Follow the instructions in the Wi-Fi Guide in the display.

4 Select **ON**, **OFF**, or **Reset** and press the dial or **START**.
- If **ON** is selected, the Wi-Fi icon turns on.
- If **OFF** is selected, the Wi-Fi icon turns off.
- Selecting **Reset** initializes the IP address.

Setting the Sound

Adjust the sound of the control.

1 Select **Settings** by turning the dial and press the dial or **START**.

2 Select **Sound** by turning the dial and press the dial or **START**.

3 Select **Mute**, **Low**, or **High** and press the dial or **START**.

Language Selection

Set the display language to English or Arabic.

1 Select **Settings** by turning the dial and press the dial or **START**.

2 Select **Language** by turning the dial and press the dial or **START**.

3 Select the desired language and press the dial or **START**.

Setting the Clock

When the oven is not in use, the time show in the LCD display for a period of time.

1 Select **Settings** by turning the dial and press the dial or **START**.

2 Select **Time** by turning the dial and press the dial or **START**.

3 Turn the dial to set the correct hour and press the dial or **START**.

4 Turn the dial to set the correct minutes and press the dial or **START**.

NOTE

- When dialing to set the hour, AM/PM is distinguished based on 12 o'clock.
- The clock needs to be reset after reconnecting the power cord.

Open Source License

This screen displays a list of the open source software contained in this product. Refer to the indicated licenses for the terms and conditions of their use.

1 Select **Settings** by turning the dial and press the dial or **START**.

2 Select **Open Source License** by turning the dial and press the dial or **START**.

Remote Start

Remotely start some cooking modes. The appliance must be connected to a home Wi-Fi network to use Remote Start.

Setting Remote Start

1 Press **Remote Start**. The Wi-Fi icon appears.

- In this mode, the controls for both ovens are locked.

2 Follow the instructions in the LG ThinQ application for using the Remote Start.

NOTE

- Remote Start is disconnected in the following situations:
  - Remote Start is never set up in the smartphone app.
  - The Remote Start status is “ready”.
  - Remote Start experiences a problem during operation.
- The Wi-Fi icon shows the status of the appliance's network connection. If the Wi-Fi icon is not lit, use the smartphone app to select the Wi-Fi network or register the product again.

- A faulty Wi-Fi connection could delay the Remote Start function.

Cleaning

Increase the internal temperature of the oven to reduce odors.

- Select **Cleaning** by turning the dial and press the dial or **START**.

Quick Start

Quick Start Feature

This feature allows you to set 30-second intervals of High power cooking with each press of the **START/+30 seconds** button.

Cooking for 2 Minutes on High Power

1 Press **STOP/Clear**.

2 Press **START/+30 seconds** four times.
   - The oven starts cooking and the time counts down in the display.

NOTE

- The oven will immediately start cooking for 30 seconds on high power.
- Press **START/+30 seconds** repeatedly to extend the cook time by 30 seconds every time the button is pressed.

Manual Cooking

When not using the auto cooking functions, the cooking time and power level are set manually.

Press **Microwave**, **Grill**, **Air Fry** or **Auto Cook** to select the mode quickly.

Microwave Mode

You can easily boil or heat food, and adding steam will help keep it more moist.

1 Select **Microwave** by turning the dial and press the dial or **START**.

2 Select desired **Power Level** by turning the dial and press the dial or **START**.

3 Select desired **Cook Time** by turning the dial and press the dial or **START**. The oven starts to heat.

NOTE

- Press **Microwave** to select the mode quickly.
- When cooking you can increase or decrease cooking time by turning the dial.

Grill Mode

This feature uses the heat from the upper heater attached inside the oven to brown the surface of the food. It is suitable for thin dishes, while thicker dishes should be cooked using the microwave mode first to ensure they are cooked through, and then finished with this feature for a crispy exterior.

1 Select **Grill** by turning the dial and press the dial or **START**.

2 Select a desired **Grill Mode** by turning the dial and press the dial or **START**.
   - **Grill Mode** / Heater operating
     - Grill 1 / Upper heater (1550 W)
     - Grill 2 / Upper heater (1100 W)
     - Grill 3 / Lower heater (700 W)

3 Select desired **Cook Time** by turning the dial and press the dial or **START**. The oven starts to heat.

⚠ CAUTION

- Always use gloves when removing food and accessories after cooking as the oven and accessories will be very hot.

NOTE

- Press **Grill** to select the mode quickly.
- When cooking you can increase or decrease cooking time by turning the dial.
- The rack can be used in grill and grill combination cooking. Place the rack on the metal tray.

Air Fry Mode

The function allows you to cook food to a crispy finish using little to no oil.

To preheat the oven

1 Select **Air Fry** by turning the dial and press the dial or **START**.

2 Select desired **Temperature** by turning the dial and press the dial or **START**.

3 Select **Preheating** by turning the dial and press the dial or **START**. The oven starts to heat.

To cook food using Air Fry Mode

1 Select **Air Fry** by turning the dial and press the dial or **START**.

2 Select desired **Temperature** by turning the dial and press the dial or **START**.

3 Select desired **Cook Time** by turning the dial and press the dial or **START**. The oven starts to heat.

NOTE

- Press **Air Fry** to select the mode quickly.
- When cooking you can increase or decrease cooking time by turning the dial.

Convection Mode

This feature allow you to cook food with hot blast heating.

To preheat the oven

1 Select **Convection** by turning the dial and press the dial or **START**.

2 Select desired **Temperature** by turning the dial and press the dial or **START**.

3 Select **Preheating** by turning the dial and press the dial or **START**. The oven starts to heat.

To cook food using the Convection Mode

1 Select **Convection** by turning the dial and press the dial or **START**.

2 Select desired **Temperature** by turning the dial and press the dial or **START**.

3 Select desired **Cook Time** by turning the dial and press the dial or **START**. The oven starts to heat.

⚠ CAUTION

- Always use gloves when removing food and accessories after cooking as the oven and accessories will be very hot.
- The low rack can be used in convection, and convection combination cooking. Place the low rack on the glass tray.

NOTE

- The convection oven has a temperature range of 100 - 230 ℃
- When cooking you can increase or decrease cooking time by turning the dial.

Grill Combi Mode

This feature allow you to cook food with heater and microwave at the same time or alternately. This generally means it takes less time to cook your food.

1 Select **Grill Combi** by turning the dial and press the dial or **START**.

2 Select a desired **Grill Mode** by turning the dial and press the dial or **START**.
- **Grill Mode** / Heater operating
  - Grill 1 / Upper heater (1550 W)
  - Grill 2 / Upper heater (1100 W)
  - Grill 3 / Lower heater (700 W)

3 Select a desired **Power Level** (180 W, 360 W or 720 W) by turning the dial and press the dial or **START**.

4 Select desired **Cook Time** by turning the dial and press the dial or **START**. The oven starts to heat.

NOTE

- When cooking you can increase or decrease cooking time by turning the dial.

Convection Combi Mode

This feature allow you to cook food with convection temperature and microwave at the same time or alternately. This generally means it takes less time to cook your food.

1 Select **Convection Combi** by turning the dial and press the dial or **START**.

2 Select desired **Temperature** by turning the dial and press the dial or **START**.

3 Select desired **Power Level** (180 W, 360 W or 720 W) by turning the dial and press the dial or **START**.

4 Select desired **Cook Time** by turning the dial and press the dial or **START**. The oven starts to heat

⚠ CAUTION

- Always use gloves when removing food and accessories after cooking as the oven and accessories will be very hot.

NOTE

- When cooking you can increase or decrease cooking time by turning the dial.

Dehydrate Mode

This feature allows you to dry the moisture of food.

1 Select **Dehydrate** by turning the dial and press the dial or **START**.

2 Select desired **Temperature** by turning the dial and press the dial or **START**.

3 Select desired **Cook Time** by turning the dial and press the dial or **START**. The oven starts to heat.

Proof Mode

This feature allows you to make dough, yogurt, etc..

1 Select **Proof** by turning the dial and press the dial or **START**.

2 Select desired **Cook Time** by turning the dial and press the dial or **START**. The oven starts to heat.

Auto Cooking Mode

Auto Cook Mode

1 Press **Auto Cook**.

2 Select a desired menu by turning the dial and press the dial or **START**.

3 Select type of food by turning the dial and press the dial or **START**.

4 Select **Quantity** by turning the dial and press the dial or **START**.

Microwave Menu

Utensil: Low rack on the Metal tray

- **1 Warm milk (1 - 3 servings, 200 ml/serving)**
  - Initial Temperature: Refrigerated
  - Pour the refrigerated milk into the mug, but do not cover the lid. Place the mug on the low rack on the metal tray.
  - After the cooking, stir until well mixed.
- **2 Boiled potatoes (0.2 - 0.8 kg, 0.2 kg/ea)**
  - Initial Temperature: Room
  - Wash the potatoes, pierce the skins with a fork a few times, place them in a heatproof plate, and cover with plastic wrap or a lid. Place the plate on the low rack on the metal tray.
- **3 Reheat stew (1 - 3 servings, 0.2 kg/serving)**
  - Initial Temperature: Refrigerated
  - Place the stew in a heatproof container and cover with plastic wrap or a lid.
  - After the cooking, stir until well mixed. Place the plate on the low rack on the metal tray.
- **4 Reheat rice (1 - 3 servings, 0.2 kg/serving)**
  - Initial Temperature: Refrigerated
  - Place the refrigerated rice in a heatproof container and cover with plastic wrap or a lid. For sealed containers, leave the lid slightly open. Place the plate on the low rack on the metal tray.

Steam Cook Menu

- **1 Vegetables (cut small) (0.2 - 0.8 kg)**
  - Initial Temperature: Room
  - Ingredients: Baby Carrot, Broccoli, Cauliflower, Zucchini, Spinach
  - Clean vegetables and cut into similar sized pieces. Pour 200 ml tap water into the steam water bowl. Place the steam plate on the steam water bowl. Place the prepared food on

the steam plate in a single layer. Cover with the steam cover. Place the steam water bowl in the center of the low rack on metal tray.

- After steaming, stand for 1 minute in the oven.

- **2 Vegetables (cut large) (0.2 - 0.8 kg)**
  - Initial Temperature: Room
  - Ingredients: Cabbage, Potato
  - Clean vegetables and cut into quarters. Pour 200 ml tap water into the steam water bowl. Place the steam plate on the steam water bowl. Place the prepared food on the steam plate in a single layer. Cover with the steam cover. Place the steam water bowl in the center of the low rack on metal tray.
  - After steaming, stand for 1 minute in the oven.
- **3 Celery (0.2 - 0.8 kg)**
  - Initial Temperature: Room
  - Clean vegetables and cut into 3 - 5 cm pieces. Pour 200 ml tap water into the steam water bowl. Place the steam plate on the steam water bowl. Place the prepared food on the steam plate in a single layer. Cover with the steam cover. Place the steam water bowl in the center of the low rack on metal tray.
  - After steaming, stand for 1 minute in the oven.
- **4 Green beans (0.2 - 0.8 kg)**
  - Initial Temperature: Room
  - Clean vegetables and cut into appropriate sized pieces. Pour 200 ml tap water into the steam water bowl. Place the steam plate on the steam water bowl. Place the prepared food on the steam plate in a single layer. Cover with the steam cover. Place the steam water bowl in the center of the low rack on metal tray.
  - After steaming, stand for 1 minute in the oven.
- **5 Sausage (0.1 - 0.6 kg)**
  - Initial Temperature: Refrigerated
  - Pour 200 ml tap water into the steam water bowl. Place the steam plate on the steam water bowl. Place the prepared food on the steam plate in a single layer. Cover with the steam cover. Place the steam water bowl in the center of the low rack on metal tray.
  - After steaming, stand for 1 minute in the oven.
- **6 Ground meat (0.1 - 0.3 kg)**
  - Initial Temperature: Refrigerated
  - Pour 200 ml tap water into the steam water bowl. Place the steam plate on the steam water bowl. Place damped cotton cloth or paper towel on the steam plate. Place the prepared food on the steam plate in a single layer. Cover with the steam cover. Place the steam water bowl in the center of the low rack on metal tray.
  - After steaming, stand for 1 minute in the oven.
- **7 Chicken legs (0.2 - 0.8 kg)**
  - Initial Temperature: Refrigerated
  - Clean the food and season as desired. Pour 200 ml tap water into the steam water bowl. Place the steam plate on the steam water bowl. Place the prepared food on the steam plate in a single layer. Cover with the steam cover. Place the steam water bowl in the center of the low rack on metal tray.
  - After steaming, stand for 1- 2 minutes in the oven.
- **8 Chicken breasts (0.2 - 0.6 kg, under 2.5cm thick)**
  - Initial Temperature: Refrigerated
  - Clean the food and season as desired. Pour 200 ml tap water into the steam water bowl. Place the steam plate on the steam water bowl. Place the prepared food on the steam plate in a single layer. Cover with the steam cover. Place the steam water bowl in the center of the low rack on metal tray.
  - After steaming, stand for 1 minute in the oven.
- **9 Eggs (2 - 9 ea)**
  - Initial Temperature: Refrigerated
  - Pour 200 ml tap water into the steam water bowl. Place the steam plate on the steam water bowl. Place the eggs on the steam plate. Cover with the steam cover. Place the steam water bowl in the center of the low rack on metal tray.
  - After steaming, stand for 1 minute in the oven.
- **10 Fish fillet** (0.1 - 0.6 kg, under 2.5 cm thick)
  - Initial Temperature: Refrigerated
  - Clean the food and season as desired. Pour 200 ml tap water into the steam water bowl. Place the steam plate on the steam water

bowl. Place the prepared food on the steam plate in a single layer. Cover with the steam cover. Place the steam water bowl in the center of the low rack on metal tray.

- After steaming, stand for 1 minute in the oven.

- **11 Whole fish (0.1 - 0.6 kg, under 25 cm length and 3 cm thick)**
  - Initial Temperature: Refrigerated
  - Clean the food and season as desired. Pour 200 ml tap water into the steam water bowl. Place the steam plate on the steam water bowl. Place the prepared food on the steam plate in a single layer. Cover with the steam cover. Place the steam water bowl in the center of the low rack on metal tray.
  - After steaming, stand for 1 minute in the oven.
- **12 Shrimp (0.1 - 1.0 kg)**
  - Initial Temperature: Refrigerated
  - Clean the food and season as desired. Pour 200 ml tap water into the steam water bowl. Place the steam plate on the steam water bowl. Place the prepared food on the steam plate in a single layer. Cover with the steam cover. Place the steam water bowl in the center of the low rack on metal tray.
  - After steaming, stand for 1 minute in the oven.

⚠ CAUTION

- Always use oven gloves when removing a steamer from the oven. It is very hot.
- Do not put a hot steamer on a glass table or a place that may melt after cooking. Always make sure a pad or tray is used.
- When you use the steamer, pour at least 300 ml water before use. If the amount of water is less than 300 ml, it may cause incomplete cooking, or may cause a fire or fatal damage to the product.
- Be careful when you move the steamer with water.
- Do not use the steamer with a product from a different model. It may cause fire or fatal damage to the product.
- When you use the steamer, the steam cover and tray should be set perfectly right. Eggs or chestnuts will explode if the steam cover and tray are not set.

NOTE

- When cooking you can increase or decrease cooking time by turning the dial.
- Utensil: Steamer (steam cover ❶, steam plate ❷, steam water bowl ❸), low rack ❹ and metal tray ❺)

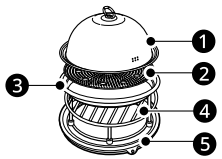

Air Fry Menu

Utensil: Crisp tray on the High rack on the Metal tray

- **1 Frozen chicken nuggets (0.2 - 0.4 kg)**
  - Initial Temperature: Frozen
  - Arrange frozen chicken nuggets evenly in a single layer on the crisp tray, then place them on a high rack on the metal tray. When the beep sounds, flip them over once and cook for the remaining time.
- **2 Frozen chicken tenders (0.2 - 0.4 kg)**
  - Initial Temperature: Frozen
  - Arrange frozen chicken tender evenly in a single layer on the crisp tray, then place them on a high rack on the metal tray. When the beep sounds, flip them over once and cook for the remaining time.
- **3 Fried chicken (0.2 - 0.4 kg)**
  - Initial Temperature: Refrigerated
  - Wash the chicken wings cleanly, season with salt and pepper, and marinate for 30 minutes. Remove moisture from the chicken wings, and coat them evenly with a mixture of 1t of baking powder and 1t of starch. Spread oil on a crisp tray and evenly coat the surface. Place wings on the crisp tray in a single layer, and then put it on a high rack on the metal tray. When the beep sounds, turn the food over and cook for the remaining time.
- **4 Frozen fish fingers (0.2 - 0.4 kg)**

- Initial Temperature: Frozen
- Arrange frozen fish fingers evenly in a single layer on the crisp tray, then place them on a high rack on the metal tray. When the beep sounds, flip them over once and cook for the remaining time.

- **5 Frozen french fries (0.1 - 0.3kg)**
  - Initial Temperature: Frozen
  - Arrange frozen french fries evenly in a single layer on the crisp tray, then place them on a high rack on the metal tray.
- **6 Potato wedges (2 servings, 0.4 kg)**
  - Initial Temperature: Room
  - Wash the potatoes, remove moisture, cut into 8 wedge shapes, season the surface, and coat with oil. Arrange potatoes evenly in crisp tray on the high rack on the metal tray.

Meat Menu

- **1 Chicken legs (0.2 - 0.6 kg)**
  - Initial Temperature: Refrigerated
  - Utensil: Crisp tray on the High rack on the Metal tray
  - Brush chicken leg with oil or melted butter, season as desired. Place it on the crisp tray on the high rack on the metal tray. Put into the oven. When oven beeps, turn food over. After cooking, allow to rest covered with foil for 3 minutes. Use generated juice for gravy or sauce.
- **2 Whole chicken (1.0 - 1.5 kg)**
  - Initial Temperature: Refrigerated
  - Utensil: Low rack on the Metal tray
  - Brush chicken with oil or melted butter, season as desired. Place it on the low rack on the metal tray. Put into the oven. When oven beeps, turn food over. After cooking, allow to rest covered with foil for 3 minutes. Use generated juice for gravy or sauce.
- **3 Whole duck (1.5 - 2.0 kg)**
  - Initial Temperature: Refrigerated
  - Utensil: Low rack on the Metal tray
  - Brush duck with oil or melted butter, season as desired. Place duck on the low rack on the metal tray. Put into the oven. When oven beeps, turn food over. After cooking, allow to rest covered with foil for 3 minutes. Use generated juice for gravy or sauce.
- **4 Ghormeh Sabzi (1 serving)**
  - Initial Temperature: Refrigerated
  - Utensil: Low rack on the Metal tray
  - Ingredients: 350 g fried sabzi, 250 g chopped meat, 150 g cooked kidney beans, 3 tbsp fried onion, 3 tbsp oil, 4 cups hot water, 1 tsp pepper, 1 tsp turmeric, 4 dried lime
  - Put a chopped meat fried onion, turmeric, pepper, oil and 1 1/2 cup hot water in a microwave-safe bowl. Do not cover. Place the microwave-safe bowl on the low rack on the metal tray. When 1st beep sounds, add 2 1/2 cups hot water and mix well. Cover with lid and press start to continue cooking. When 2nd beep sounds, add fried sabzi, cooked beans and dried lime. Cover with lid and press start to continue cooking. After cook, stir well.
- **5 Goulash (1 serving)**
  - Initial Temperature: Refrigerated
  - Utensil: Low rack on the Metal tray
  - Ingredients:

    1 tbsp. olive oil, 1 small onion, 680 g lean ground beef, 1 tsp allspice, 1/2 tsp ground black pepper, 1 tsp salt, 1/4 tsp ground cinnamon, 1/4 tsp ground ginger, 1 tbsp. tomato paste

    A packet (45 g) phyllo dough thawed, 1/2 cup light tasting olive oil, 1/4 cup ghee or butter melted, 1 cup milk, 1 large egg, salt and pepper
  - Add the olive oil in a large non-stick saute pan and heat, then saute onion for 2 - 3 minutes until tender. Add the ground beef, breaking it apart then add all the other ingredients. Cook until browned, set aside. Melt ghee in a small sauce pan or in the microwave. Mix in olive oil. Brush or spray baking dish with the oil, take 2 - 3 sheets of phyllo dough and lay them flat on dish, then brush with oil mixture. Continue layering the phyllo dough 2 - 3 sheets at a time and brushing them until done with half the package. Add the minced meat mixture and spread evenly. Continue layering and brushing the remaining phyllo sheets until done with the package. Cut into squares or diamond shape. In a measuring cup, beat the

egg and add the milk, sprinkle some salt and pepper, then carefully pour into the dish, tilt the dish in all directions so the milk mixture will spread evenly. Place the baking dish on the low rack on the metal tray. Choose the menu and press start.

- **6 Kafta (0.2 - 0.4 kg)**
  - Initial Temperature: Refrigerated
  - Utensil: High rack on the Metal tray
  - Ingredients:

    0.4 kg ground beef with some fat (15%), 1/2 tsp ground cardamom, 1 tsp ground allspice, 1/2 tsp salt, 1/2 tsp black pepper, 8 g chopped parsley, 1 hot green chilly peppers, 1 1/2 cloves garlic, 1/3 medium onion
  - Place the ground meat in a large bowl and add the spices. Run the parsley, chilies, garlic and onion together through a meat grinder or pulse them gently, adding one ingredient at a time, in a food processor, beginning with the parsley and ending with the onions. Combine with the ground meat. Roll into balls of 50 g each and pierce each ball through with bamboo skewers and spread into long kebabs, about 3 inch or longer on the skewer. Place the skewers onto a high rack on the metal tray. Choose the menu and weight, press start. When beep sounds, turn food over once. Press the start to continue cooking for the remaining time.
- **7 Kebab on tray (0.2 - 0.4 kg)**
  - Initial Temperature: Refrigerated
  - Utensil: High rack on the Metal tray
  - Ingredients:

    0.4 kg ground meat (Mix beef and veal at a ratio of 3 to 1), 1 eggs, 1/4 tsp minced garlic, 1/3 small onion chopped, 1 tbsp breadcrumbs, 1 tsp. salt, a pinch of pepper, 1 tbsp finely chopped fresh mint, 1 tbsp olive oil
  - Combine the ground meat, eggs, garlic onion, breadcrumbs, salt, pepper, mint, and olive oil into a large bowl and mix the ingredients. Roll into balls of 50 g each and pierce each ball through with bamboo skewers and spread into long kebabs, about 3 inch or longer on the skewer. Position the bamboo skewers onto a high rack on the metal tray. Choose the menu and weight, press start. When beep sounds, turn food over once. Press the start to continue cooking for the remaining time. After cooking, let cool kebabs before serving.
- **8 Kobaiba (1 serving)**
  - Initial Temperature: Refrigerated
  - Utensil: Metal tray
  - Ingredients:

    1 tbsp butter, 100 g coarsely ground or chopped walnuts, 750 g ground lamb (10% fat), 500 g finely chopped onion, 1 tsp salt, 1 tsp freshly ground black pepper, 1/2 tsp ground allspice, 1 egg

    500 g fine grain bulgur, 500 ml water, 500 g lean ground lamb or beef, 1 onion, 1 tsp salt, 1 tsp freshly ground black pepper

    120 g room temperature butter, ½ cup blanched almond
  - Melt the butter in a large saute pan set over medium heat, then add the walnuts and cook, stirring occasionally, for 10 to 15 minutes, until toasted. Remove from pan and add the ground lamb, onion, salt, pepper, and allspice. Cook, stirring often, until the juices evaporate, about 30 to 50 minutes. Remove from heat and stir in the toasted walnuts. Set aside to cool slightly, then add the egg and mix thoroughly.

    Put the bulgur in the bowl of a food processor, then add the water. Stir well with a fork and let sit for 15 minutes. Add the lamb or beef, onion, salt, and pepper, then pulse about 3 times, or just until malleable paste.Butter a 40x25 cm baking dish and spread half of the bulgur paste into the dish, patting with moistened hands to make it as even as possible. Next spread the filling, again making it as even as possible. Finish with the rest of the bulgur paste, pressing down with our hands to ensure that it sticks to the filling. Cut into 16 diamond shapes, make a small indentation in the center of each diamond, and press one almond in each dimple. Spread the butter over the kobaiba using hand. Place food on the metal tray. Choose the menu and press start. Remove from the oven and sprinkle some water over top with fingers.
- **9 Roast beef (0.5 - 1.5 kg)**
  - Initial Temperature: Refrigerated
  - Utensil: Low rack on the Metal tray

- Brush beef with oil or melted butter, season as desired. Place beef on the low rack on the metal tray. Put into the oven. When oven beeps, turn food over. After cooking, allow to rest covered with foil for 10 minutes. Use generated juice for gravy or sauce.

- **10 Roast lamb (0.5 - 1.5 kg)**
  - Initial Temperature: Refrigerated
  - Utensil: Crisp tray on the High rack on the Metal tray
  - Brush lamb with oil or melted butter, season as desired. Place lamb on the low rack on the metal tray. Put into the oven. When oven beeps, turn food over. After cooking, allow to rest covered with foil for 10 minutes. Use generated juice for gravy or sauce.
- **11 Fillet of beef (0.4 - 1.2 kg)**
  - Initial Temperature: Refrigerated
  - Utensil: Low rack on the Metal tray
  - Brush fillet of beef with oil or melted butter, season as desired. Place beef on the low rack on the metal tray. Put into the oven. When oven beeps, turn food over. After cooking, allow to rest covered with foil for 5 minutes. Use generated juice for gravy or sauce.
- **12 Leg of lamb (0.5 - 1.5 kg)**
  - Initial Temperature: Refrigerated
  - Utensil: Crisp tray on the High rack on the Metal tray
  - Brush leg of lamb with oil or melted butter, season as desired. Place lamb on the low rack on the metal tray. Put into the oven. When oven beeps, turn food over. After cooking, allow to rest covered with foil for 10 minutes. Use generated juice for gravy or sauce.
- **13 Lamb chops (0.4 - 1.2 kg)**
  - Initial Temperature: Refrigerated
  - Utensil: Low rack on the Metal tray
  - Brush lamb chops with oil or melted butter, season as desired. Place lamb chops on the crisp tray on the high rack on the metal tray. Put into the oven. When oven beeps, turn food over. After cooking, allow to rest covered with foil for 3 minutes. Use generated juice for gravy or sauce.

Fish/Seafood Menu

Utensil: Crisp tray on the High rack on the Metal tray

- **1 Salmon (0.4 - 1.2 kg)**
  - Initial Temperature: Refrigerated
  - Choose salmon steaks of 200 g weight and 2.5 cm thickness each. Brush salmon with oil or melted butter, season as desired. Place salmon on the crisp tray on the high rack on the metal tray. Put into the oven. When oven beeps, turn food over. After cooking, allow to rest covered with foil for 3 minutes. Use generated juice for gravy or sauce.
- **2 Trout (0.4 - 0.8 kg)**
  - Initial Temperature: Refrigerated
  - Choose trout of 200 g weight each. Brush trout with oil or melted butter, season as desired. Place trout on the crisp tray on the high rack on the metal tray. Put into the oven. When oven beeps, turn food over. After cooking, allow to rest covered with foil for 3 minutes. Use generated juice for gravy or sauce.
- **3 Tuna (0.4 - 0.8 kg)**
  - Initial Temperature: Refrigerated
  - Choose tuna fish steaks of 200 g weight and 2.5 cm thickness each. Brush tuna with oil or melted butter, season as desired. Place tuna on the crisp tray on the high rack on the metal tray. Put into the oven. When oven beeps, turn food over. After cooking, allow to rest covered with foil for 3 minutes. Use generated juice for gravy or sauce.
- **4 Scallops (1 serving)**
  - Initial Temperature: Refrigerated
  - Ingredients: Scallops (0.7 kg), Butter
  - Put sherry with scallops. Place scallops on crisp tray on the high rack on the metal tray. Brush melted butter over scallops. When oven beeps, pour out scallops juice, then continues cook until finish.

Vegetable/Grain Menu

- **1 Grilled vegetables (1 serving)**
  - Initial Temperature: Refrigerated

- Utensil: Crisp tray on the High rack on the Metal tray
- Ingredients: Eggplants, cut into 1 - 2 cm thickness zucchinis, cut into 1 - 2 cm thickness onions, cut into wedges sweet peppers, cut in half lengthwise and discard seeds, whole cherry tomatoes, mushrooms-cut in half, butter (or oil)
- Brush vegetables with melted butter or oil and season as desired. Place food on the crisp tray on the high rack on the metal tray. Put into oven. When oven beeps, turn food over. After cooking, allow to rest covered with foil for 5 minutes. Use generated juice for gravy or sauce.

• **2 Rice (0.1 - 0.4 kg)**
- Initial Temperature: Room
- Utensil: Low rack on the Metal tray
- Ingredients:

Rice	Water	Oil (liquid)	Salt
0.1 kg	250 ml	1 Tablespoon	To taste
0.2 kg	500 ml	2 Tablespoons	To taste
0.3 kg	750 ml	2 Tablespoons	To taste
0.4 kg	1000 ml	3 Tablespoons	To taste

- Wash the rice and throw away additional water. First, add the rice, water, salt an liquid oil into a deep glass pot and mix them. Do not cover to vaporize whole water. Place the pot on the low rack on the metal tray.
- After cooking, stir and stand covered for 5 - 10 minutes if needed.

• **3 Tahchin (0.8 kg)**
- Initial Temperature: Refrigerated
- Utensil: Crisp tray with Steam cover on the Low rack on the Metal tray
- Ingredients: 880 g cooked basmati rice, 2 whole eggs, 200 g yogurt, 2 tbsp oil, 5 tbsp saffron water, zereshk and sliced almond, 2 egg yolks
- Combine oil ingredients without zereshk and sliced almond in a large mixing bowl and stir well. Place half of mixture on the crisp tray. Put a zereshk and sliced almond on the mixture. Put the remained mixture and cover with steam cover. Place the crisp tray on the low rack on the metal tray. Choose the menu and press start.

• **4 Kuku Sabzi (1 serving)**
- Initial Temperature: Room
- Utensil: Crisp tray with Steam cover on the Low rack on the Metal tray at BEEP, remove the cover
- Ingredients: 450 g of green vegetable, 6 eggs, 1 tsp baking powder, 1/2 tsp turmeric, 4 tbsp flour, 4 tbsp oil, salt and pepper to taste
- Combine all ingredients in a large mixing bowl and stir well. Place food on the greased crisp tray. Cover with steam cover. Place the crisp tray on the low rack on the metal tray. Choose the menu, press start. When oven beep sounds, remove the cover and press start to continue cooking.

• **5 Roast potatoes (0.4 - 0.8 kg, 0.2 kg/ea)**
- Initial Temperature: Room
- Utensil: Low rack on the Metal tray
- Choose small potatoes (150 - 200 g each). Peel, wash, dry and cut potatoes into halves. Mix potatoes with salt, pepper and oil or melted butter. Place potatoes on the crisp tray on the low rack on the metal tray. When oven beep sounds, turn food over.

• **6 Potatoes gratin (1 serving)**
- Initial Temperature: Room
- Utensil: Crisp tray on the High rack on the Metal tray
- Ingredients: Potato (0.4 - 0.6 kg), Grated cheese
- Cut pre-cooked gratin potatoes with slices. Place potatoes in crisp tray, cover with grated cheese (30 g per 500 g gratin potatoes). Place gratinated potatoes on the low High rack on the metal tray. Put into the oven.

Pizza Menu

Utensil: Crisp tray on the High rack on the Metal tray

- **1 Frozen pizza (thin crust) (1 serving, 0.3 kg)**
  - Initial Temperature: Frozen
  - Place frozen pizza on the crisp tray on the high rack on the metal tray. Put into the oven. Use only one frozen pizza at a time.
- **2 Frozen pizza (thick crust) (1 serving, 0.45 kg)**
  - Initial Temperature: Frozen
  - Place frozen pizza on the crisp tray on the high rack on the metal tray. Put into the oven. Use only one frozen pizza at a time.
- **3 Homemade pizza (1 serving, 0.4 kg)**
  - Initial Temperature: Room
  - Ingredients:

    Dough: 120 g all-purpose flour or bread flour, 1 teaspoon active dry yeast, 1/3 teaspoon salt, 1 teaspoon sugar, 70 ml warm water, 1 teaspoon extra-virgin olive oil, plus little for coating

    Topping: 3 tablespoons pizza sauce, 30 g sausage (sliced), 1/2 onion (sliced), 2 fresh mushrooms (sliced), 1/2 fresh pepper, 100 g shredded mozzarella cheese
  - Combine all Ingredients for Dough in mixer bowl. Knead with an electric mixer to make smooth and elastic dough. Roll dough out and place dough on the crisp tray. Spread pizza sauce. Top with toppings and cheese. Place the crisp tray on the high rack on the metal tray.

Dessert/Bread Menu

- **1 Umm Ali (1 serving)**
  - Initial Temperature: Room
  - Utensil: Metal tray
  - Ingredients: 4 all-butter croissants, 2 tbsp. raisins or dried mixed berries, 2 tbsp. flaked/ slivered almonds, 2 tbsp. pine nuts, 2 tbsp. roughly chopped shelled unsalted pistachios, 250 ml milk, 5 tbsp caster sugar, 1/4 tsp ground cinnamon, 2 tsp orange blossom water, 250ml whipping cream, 4 tbsp shredded coconut, 1 small egg (optional)
  - Tear up the croissants into bite-size pieces, place on the baking sheet and bake in the 180 ℃ oven for 10 minutes until crisp and golden. Spread the baked croissant pieces across the base of a baking dish, about 23 cm in square. Sprinkle over the raisins, almonds, pine nuts and pistachios, making sure they are spread evenly. Heat the milk in a heavy-based saucepan over a medium heat, add 3 tablespoons of the sugar and mix well to dissolve. Reduce the heat to low, add the cinnamon and orange blossom water and heat through at a gentle simmer for 3-4 minutes. Remove the pan from the heat and leave it to cool so that the egg will not scramble when it’s added to it. Put the cream and the remaining sugar in a mixing bowl and whisk until the mixture forms soft peaks. Sprinkle in the coconut and gently fold to incorporate. Add the egg to the cool milk mixture and whisk to combine. Ladle the mixture into the baking dish and spread the whipped cream over the top. Place baking dish on the metal tray.
- **2 Baklava (1 serving)**
  - Initial Temperature: Room
  - Utensil: Metal tray
  - Ingredients: 175 g melted butter, 400 g thawed filo pastry, 2 tbsp. lemon juice, 4 tbsp. clear thick honey, 59 g caster sugar, finely grated rind of 1 lemon, 2 tsp cinnamon, 200 g blanched almonds copped, 200 g chopped walnuts, 75 g chopped pistachios or hazelnuts, 359 g caster sugar, 115 g clear honey, 600 ml water, 2 strips of thinly pared lemon rind, 1 tsp orange flower or rose water
  - Brush the base of a shallow 30 x 20 cm loose-bottomed or Swiss roll tin (jelly roll pan) with a little of the melted butter. Using the tin as a guide, cut the sheets of filo pastry with a sharp knife so that they fit the tin exactly. To make filing, place the lemon juice, honey and sugar in a pan and heat gently until dissolved. Stir in the lemon rind, cinnamon and chopped nuts. Mix thoroughly. Spread half the filling over the pastry, cover with three layers of the filo pastry and butter then spread the remaining filling over the pastry. Finish by using up the remaining sheets of pastry and butter on top and brush the top of the pastry liberally with butter. Using a sharp knife, carefully mark the pastry into squares or diamond shape, almost cutting through the filing. Place food on the metal tray. Choose the menu and press start. Place the caster sugar, honey, water and

lemon rind in a pan and stir over a low heat until the mixture has thickened slightly. Take the syrup off the heat and leave to cool slightly. Remove the baklava from the oven. Remove and discard the lemon rind from the syrup and stir in the orange flower or rose water, then pour over the pastry. Leave to soak for 6 hours. Cut into squares and serve, decorated with chopped pistachios.

- **3 Cookies (1 serving)**
  - Initial Temperature: Room
  - Utensil: Low rack on the Metal tray
  - Ingredients: 80 g brown sugar, 80 g butter (softened), 1 egg (lightly beaten), 180 g all-purpose flour (sifted), 1/2 teaspoon baking powder, 1/2 teaspoon baking soda, 100 g mini chocolate chips
  - Mix brown sugar and softened butter. Gradually add egg and stir until light and fluffy. Add flour, baking powder, baking soda and chocolate chips and mix well. Drop the dough about 18 g each, press the small dough ball to about 3 mm thick. Place 18 ea the cookies on the low rack with 2 sheets of aluminum foil on the metal tray.
  - After cooking, remove from the oven and let them cool.
- **4 Muffins (1 serving)**
  - Initial Temperature: Room
  - Utensil: Low rack on the Metal tray
  - Ingredients: 150 g flour, 1 1/2 tsp baking powder, 60 g granulated sugar, 1 egg beaten, 130 ml milk, 70 ml vegetable oil, 1/2 tsp vanilla extract, 50 g semisweet chocolate chips, 50 g chopped walnuts, sifted confectioners' sugar
  - Combine flour and sugar in a mixing bowl; make a well in center of mixture. Combine remaining ingredients except for confectioners' sugar; add to dry ingredients, stir just until moistened. Spoon into greased and floured muffin pan, filling about two thirds full. Place the muffin pan on the low rack on the metal tray. Put into the oven. Remove from pans and sprinkle with confectioners' sugar.
- **5 Buns (6 ea)**
  - Initial Temperature: Room
  - Utensil: Crisp tray on the Low rack on the Metal tray
  - Ingredients: 200 g flour, 100 ml warm milk, 35 g sugar, 15 g yeast, 25 g butter, 7.5 g vanilla sugar, 1 g salt, 60 g raisins (optional)
  - Put the flour in a mixing bowl and make a well. Add yeast and 20 g sugar to milk and mix. Pour the liquid into the well and cover with some flour. Leave to rise in a warm place until cracks appear on the surface. Add the remaining sugar, softened butter, vanilla sugar, salt and knead into a smooth yeast dough. Let the dough rise in a warm place until it doubles in size. Put raisins into the batter. Divide the dough into 6 pieces and shape into rounds. Place it on crisp tray on the low rack on the metal tray. Let rise again and brush with milk.
- **6 Brownies (1 serving)**
  - Initial Temperature: Room
  - Utensil: Low rack on the Metal tray
  - Ingredients: 225 g melted butter, 400 g white sugar, 100 g cocoa powder, 1 tsp vanilla extract, 2 eggs, 130 g all-purpose flour, 1/2 tsp baking powder, 1/2 tsp salt, 70 g walnut halves
  - Combine the melted butter, sugar, cocoa powder and mix well. Add vanilla, eggs, flour, baking powder and salt. Spread the batter into the heat proof pan lined with baking paper. Decorate with walnut halves, if desired. Place it on the low rack on the metal tray.
- **7 Apple pie (1 serving)**
  - Initial Temperature: Room
  - Utensil: Low rack on the Metal tray
  - Ingredients: 150 g white sugar, 2 tbsp all-purpose flour, 1/2 tsp ground cinnamon, 1/4 tsp ground nutmeg, 12 tsp lemon zest, 1.2 kg thinly sliced apples, 2 tsp lemon juice, 1 tbsp butter, 1 recipe pastry for a 9-inch double crust pie, 4 tbsp milk (optional)
  - Mix together the sugar, flour, cinnamon, nutmeg and lemon zest. Line one crust in a 9-inch deep dish pie pan. Layer 1/3 of apples on pie crust. Sprinkle with sugar mixture and repeat until done. Sprinkle with lemon juice and dot with butter. Place second pie crust on top of filling and flute the edges. Cut vents in top crust and brush with milk for a glazed

appearance if desired. Place it on the low rack on the metal tray.

- **8 White bread (1 serving)**
  - Initial Temperature: Room
  - Utensil: Low rack on the Metal tray
  - Ingredients: 400 g bread flour, 100 g all-purpose flour, 300 g water, 10 g instant yeast, 8 g salt
  - In a mixing bowl of a stand mixer, whisk together the bread flour and all-purpose flour, yeast and salt. Make sure that the salt and yeast do not come into direct contact. With a paddle attachment, slowly pour in water. Then switch to a dough hook and knead for 8 minutes. Transfer dough to a lightly flour dusted work surface. Shape the dough into a ball. Cover with plastic wrap. Let rest for 30 minutes. Knead dough for 5 minutes by hand. Cover the dough and let rest 1 1/2 hours. Stretch and fold the dough. Start from the top of the dough pull forwards (away from you) then bring it to the middle. Then pull bottom of the dough backward (towards yourself) and fold to the middle. Place a loaf pan on the low rack on the metal tray.
- **9 Baguette (2 ea)**
  - Initial Temperature: Room
  - Utensil: Low rack on the Metal tray
  - Ingredients: 400 g bread flour, 100 g all-purpose flour, 300 g water, 10 g instant yeast, 8 g salt
  - In a mixing bowl of a stand-up mixer, whisk together the bread flour, all-purpose flour, yeast and salt. With a paddle attachment, slowly add the water. Then switch to a dough hook and knead for 8 minutes. Turn the dough out onto a lightly flour-dusted countertop. Shape into a ball. Cover with plastic wrap. Let rest for 30 minutes. Knead the dough by hand for 1 - 3 minutes. Cover the dough and let rest 1 1/2 hours. Decompress the dough by gently indenting with fingers into the center of the dough. Stretch and fold the dough. Working along the length of the dough, start from the upper edge of the dough, pull forward, away from you and then bring it to the center. Pull the bottom of the dough backwards (toward yourself) and fold to the center. Do the same for the left and right side of the dough. Flip the dough and cover with plastic wrap. Let rest 1 hour. Divide the dough into two equal portions. Shape the dough into 6" cylinders. Working with one piece of dough at a time (keeping the other covered in plastic wrap), shape into a rectangle. Working along the length of the dough, press with three fingers gently making several indentations into the dough. Repeat the process; roll the dough over onto itself three times until the upper edge meets the lower edge and creates a deep seam. Sealing each turn with your fingers. Pinch the seam tight and let rest for about 5 minutes (or when the dough is relaxed enough to roll) with the seam facing up. Cover with a towel. Roll and shape the baguettes to fit a perforated baguette pan. Place on a baguette pan, seam side down, and let rest for about 5 minutes covered with a towel. Make five cuts on the surface of the dough. Place a perforated baguette pan on the low rack on the metal tray.

Auto Defrost Mode

The oven has 4 preset defrost cycles. The defrost function provides the defrosting method for frozen foods. The defrost table shows the suggested defrost cycle for various foods. The defrost function conveniently chimes during the cycle to remind you to check, turn over, separate, or rearrange the food.

1. Select **Auto Defrost** by turning the dial and press the dial or **START**.

2. Select type of food by turning the dial and press the dial or **START**.
   - 1 **Meat**/ 2 **Poultry**/ 3 **Fish**/ 4 **Bread**

3. Select **Quantity** by turning the dial and press the dial or **START**. The oven starts to heat.

NOTE

- Food to be defrosted should be in a suitable microwave proof container and should be placed uncovered on the low rack on the metal tray.

NOTE

- If necessary, shield small areas of meat or poultry with flat pieces of aluminum foil. This will prevent thin areas becoming warm during defrosting. Ensure the foil does not touch the oven walls.
- Separate items like minced meat, chops, sausages and bacon as soon as possible.

Auto Defrost Menu

Refer to the below to set the desired code and weight.

1 Meat (0.1 - 4.0 kg)

- Utensil: Microwave ware (flat plate), low rack, metal tray
- Minced beef, fillet steak, cubes for stew, sirloin steak, pot roast, rump roast, beef burger, lamb chops, rolled roast, sausage, cutlets (2 cm)
- Standing time: 5 - 15 minutes.

2 Poultry (0.1 - 4.0 kg)

- Utensil: Microwave ware (flat plate), low rack, metal tray
- Whole chicken, legs, breasts, turkey breasts (under 2.0 kg)
- Standing time: 20 - 30 minutes.

3 Fish (0.1 - 4.0 kg)

- Utensil: Microwave ware (flat plate), low rack, metal tray
- Fillets, steaks, whole fish, sea foods
- Standing time: 10 - 20 minutes.

4 Bread (0.1 - 0.5 kg)

- Utensil: Paper towel or flat plate, low rack, metal tray
- Sliced bread, buns, baguettes, etc.

Utensils Guide

Microwave-Safe Utensils

- **Ovenproof Glass**: Glassware that is heat-resistant is microwave-safe. This would include all brands of oven tempered glass utensils. However, do not use delicate glassware, such as tumblers or wine glasses, as these might shatter as the food warms.
- **Pottery Stoneware Ceramic**: Use bowls, cups, serving plates, pottery, stoneware, ceramic, and platters without metallic rim. Many containers made of these materials are microwave-safe, but test them before use.
- **Plastic**
  - **Plastic Storage Containers**: These can be used to hold foods that are to be quickly reheated. However, they should not be used to hold foods that will need considerable time in the oven as hot foods will eventually warp or melt plastic containers.
  - **Plastic Cooking Bags**: Provided they are specially made for cooking, cooking bags are microwave safe. Remember to make a slit in the bag so that steam can escape. Never use ordinary plastic bags for cooking in the microwave oven, as they will melt and rupture.
  - **Plastic Microwave Utensils**: A variety of shapes and sizes of microwave utensils are available. You may be able to use items you already have on hand rather than investing in new kitchen equipment.
- **Paper**: Use paper towels, waxed paper, paper napkins, and paper plates with no metallic rim or design. Paper plates and containers are convenient and safe to use in the microwave oven, provided that the cooking time is short and foods to be cooked are low in fat and moisture. Paper towels are also very useful for wrapping foods and for lining baking trays in which greasy foods such as bacon are cooked. In general, avoid coloured paper products as the color may run. Some recycled paper products may contain impurities which could cause arcing or fires when used in the microwave.
- **Tableware**: Many containers made of pottery, stoneware and ceramic are also microwave-safe. If in doubt consult the manufacturer’s literature or perform the microwave test. Do not put plates with painted decoration in the oven, as the paint may contain metal and cause arcing.

Microwave-Unsafe Utensils

- **Metal Containers** and **Metal Decoration**
  - Never use metal or metal-rimmed utensils in the microwave oven.
  - Microwaves cannot penetrate metal. They will bounce off any metal object in the oven and cause arcing, an alarming phenomenon that resembles lightning.
  - Metal shields the food from microwave energy and produces uneven cooking. Also avoid metal skewers, thermometers, foil trays, metal-rimmed or metal-banded dinnerware, casserole dishes, etc. The metal rim interferes with normal cooking and may damage the oven.

Testing Utensils before Use

Most heat resistant and non-metallic utensils is safe for use in your oven. However, some utensils may contain materials that are not suitable for microwave use. Follow the steps below to find out if utensils can be used in the microwave.

1. Place the container in question and a glass measuring cup filled with water next to each other inside the oven.

2. Heat the container and glass measuring cup for 1 minute at HIGH power.
   - If the water heats up but the container remains cool to the press, the container is microwave-safe.
   - If the temperature of the water does not change but the container becomes warm, it is not safe for use in the microwave oven.

⚠ CAUTION

- Some items with high lead or iron content are not suitable for microwave cooking.
- Utensils should be checked to ensure that it is suitable for use in the microwave.
- Always be careful when taking utensils out of the oven. Some dishes absorb heat from the cooked food and may be hot.

Cooking Guide

Cooking Tips

Carefully monitor the food in the microwave oven when it is cooked. Directions given in recipes to elevate, stir, etc., are the minimum steps recommended. If the food seems to be cooked unevenly, simply make the necessary adjustments to correct the problem.

- **Covering**: Cover the plate with a lid, parchment paper (not waxed paper) or cling plastic wrap for use in the microwave oven. A cover traps heat and steam, which help to cook the food more quickly.
- **Stirring**: Stir from the outside towards the center, as food at the outside of the dish heats more quickly.
- **Standing Time**: Standing time allows foods to finish cooking and also helps flavors blend and develop. Foods are often allowed to stand for 3 to 10 minutes after being removed from the oven.
- **Cooking Time**: Set the cooking time according to the temperature of the ingredients. Ice-cold ingredients take considerably longer to cook than room temperature ingredients.
- **Sprinkling**: Low-moisture foods such as roasts and vegetables should be sprinkled with water before cooking or covered to retain moisture.
- **Arranging**: The upper portion of thick foods will be cooked more quickly than the lower portion. Turn food over several times during cooking.
- **Piercing**: Pierce foods that are enclosed in a shell, skin or membrane before cooking to prevent them from bursting.
  - Such foods include yolks and whites of eggs, clams, oysters, potatoes, and other whole vegetables and fruits.
- **Shape of Food**: Microwaves penetrate only about 2 cm into food. Only the outer edge of food is cooked by microwave energy; the rest is cooked as the heat moves inward.
  - Place the thickest portions of foods like meat, poultry or fish toward the outside of the utensils to help them cook more evenly.
  - If possible, shape foods into thin rounds or rings.

- **Density**: Light, porous food such as cakes and breads are cooked more quickly than heavy, dense foods such as roasts and casseroles.
- **Bones and Fat**: Bones conduct heat and fat cooks more quickly than meat. Take care with bony or fatty cuts of meat.
- **Quantity**: The more food you place in the oven, the longer the required cooking time.
- **Shielding**: Cover the corners of square dishes with strips of aluminum foil to prevent overcooking. Do not use too much foil, and make sure the foil is secured to the dish. If the foil gets too close to the oven walls during cooking, it can cause arcing.

SMART FUNCTIONS

LG ThinQ Application

The **LG ThinQ** application allows you to communicate with the appliance using a smartphone.

LG ThinQ Application Features

Communicate with the appliance from a smartphone using the convenient smart features.

Smart Diagnosis
This function provides useful information for diagnosing and solving issues with the appliance based on the pattern of use.

Remote Start
Remotely start cooking modes. (Applicable modes: Air Fry, Grill, Convection, Dehydrate, Proof, and Cleaning)

Monitoring
This function helps you check the current status, remaining time, cook settings and end time in one place.

Energy Monitoring
It provides useful information on the amount of energy and power used.

Product Notifications
Turn on the Push Alerts to receive appliance status notifications. The notifications are triggered even if the **LG ThinQ** application is not open.

Firmware Update
Keep the appliance updated.

Settings
Allows you to set various options on the appliance and in the application.

NOTE

- In the following cases, you must update the network information for each appliance in the **LG ThinQ** application under **Device Cards** > **Settings** > **Change Network**.
  - wireless router is changed
  - wireless router password is changed
  - Internet service provider is changed
- The application is subject to change for appliance improvement purposes without notice to users.
- Functions may vary by model.

Installing LG ThinQ Application and Connecting an LG Appliance

Models with QR Code

Scan the QR code attached to the product using the camera or a QR code reader application on your smartphone.

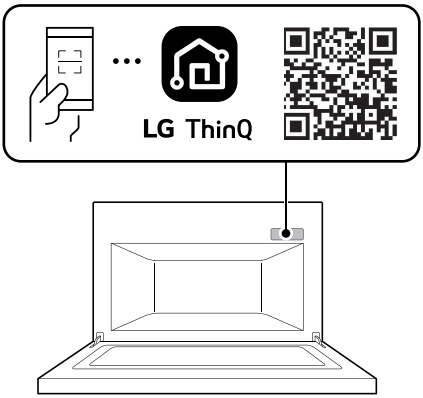

Models without QR Code

1 Search for and install the **LG ThinQ** application from the Google Play Store or Apple App Store on a smartphone.

2 Run the **LG ThinQ** application and sign in with your existing account or create an LG account to sign in.

3 Touch the add (+) button on the **LG ThinQ** application to connect your LG appliance. Follow the instructions in the application to complete the process.

NOTE

- To verify the Wi-Fi connection, check that the Wi-Fi indicator on the control panel is lit.
- The appliance supports 2.4 GHz Wi-Fi networks only. To check your network frequency, contact your Internet service provider or refer to your wireless router manual.
- **LG ThinQ** is not responsible for any network connection problems or any faults, malfunctions, or errors caused by network connection.
- The surrounding wireless environment can make the wireless network service run slowly.
- If the distance between the appliance and the wireless router is too far, the signal strength becomes weak. It may take a long time to connect or installation may fail.
- If the appliance is having trouble connecting to the Wi-Fi network, it may be too far from the router. Purchase a Wi-Fi repeater (range extender) to improve the Wi-Fi signal strength.
- The network connection may not work properly depending on the Internet service provider.
- The Wi-Fi connection may not connect or may be interrupted because of the home network environment.
- The appliance cannot be connected due to problems with the wireless signal transmission. Unplug the appliance and wait about a minute before trying again.
- If the firewall on your wireless router is enabled, disable the firewall or add an exception to it.
- The wireless network name (SSID) should be a combination of English letters and numbers. (Do not use special characters.)
- Smartphone user interface (UI) may vary depending on the mobile operating system (OS) and the manufacturer.
- If the security protocol of the router is set to **WEP**, you may fail to set up the network. Please change it to other security protocols (**WPA2** is recommended) and connect the product again.

Radio Equipment Specifications

Type	Operating Frequency Range	Output Power (Max.)
Wireless LAN	2400 MHz - 2483.5 MHz	< 100 mW
Bluetooth*1		

*1 This feature is only available on some models.

Open Source Software Notice Information

To obtain the source code that is contained in this product, under GPL, LGPL, MPL, and other open source licenses that have the obligation to disclose source code, and to access all referred license terms, copyright notices and other relevant documents, please visit https://opensource.lge.com.

LG Electronics will also provide open source code to you on CD-ROM for a charge covering the cost of performing such distribution (such as the cost of media, shipping, and handling) upon email request to opensource@lge.com.

This offer is valid to anyone in receipt of this information for a period of three years after our last shipment of this product.

Smart Diagnosis

This feature is only available on some models.

Use this feature to help you diagnose and solve problems with your appliance.

NOTE

- For reasons not attributable to LGE's negligence, the service may not operate due to external factors such as, but not limited to, Wi-Fi

unavailability, Wi-Fi disconnection, local app store policy, or app unavailability.

- The feature may be subject to change without prior notice and may have a different form depending on where you are located.

Using LG ThinQ to Diagnose Issues

If you experience a problem with your Wi-Fi equipped appliance, it can transmit troubleshooting data to a smartphone using the **LG ThinQ** application.

- Launch the **LG ThinQ** application and select the **Smart Diagnosis** feature in the menu. Follow the instructions provided in the **LG ThinQ** application.

Using Audible Diagnosis to Diagnose Issues

1 Select **Settings** by turning the dial and press the dial or **START**.

2 Select **Smart Diagnosis** by turning the dial and press the dial or **START**.

3 Follow the instructions in the display and **LG ThinQ** application for using the **Smart Diagnosis**.

NOTE

- For best results, do not move the phone while the tones are being transmitted.

TROUBLESHOOTING

FAQs

Frequently Asked Questions

Q: **What's wrong when the oven light will not glow?**

A: There may be several reasons why the oven light will not glow. Either the light bulb has blown or the electric circuit has failed.

Q: Does microwave energy pass through the viewing screen in the door?

A: No. The holes, or ports, are made to allow light to pass; they do not let microwave energy through.

Q: Why does the beep tone sound when a button on the control panel is touched?

A: The beep tone sounds to assure that the setting is being properly entered.

Q: Will the microwave function be damaged if it operates empty?

A: Yes. Never run it empty.

Q: Why do eggs sometimes pop?

A: When baking, frying, or poaching eggs, the yolk may pop due to steam build up inside the yolk membrane. To prevent this, simply pierce the yolk before cooking. Never microwave eggs in the shell.

Q: Why is standing time recommended after microwave cooking is over?

A: After microwave cooking is finished, food keeps on cooking during standing time. This standing time finishes cooking evenly throughout the food. the amount of standing time depends on the density of the food.

Q: Is it possible to cook popcorn in this oven?

A: Yes, if using one of the two methods described below.

- Popcorn-popping utensils designed specifically for microwave cooking.
- Prepackaged commercial microwave popcorn that contains specific times and power outputs needed for an acceptable final product.

Follow exact directions given by each manufacturer for their popcorn product. Do not leave the oven unattended while the corn is being popped. if corn fails to pop after the suggested times, discontinue cooking. Overcooking could result in the corn catching fire.

⚠ CAUTION

- Never use a brown paper bag for popping corn. Never attempt to pop leftover kernels.

Q: Why doesn't my oven always cook as fast as the cooking guide says?

A:

- Check your cooking guide again to make sure you have followed directions correctly, and to see what might cause variations in cooking time.
- Cooking guide times and heat settings are suggestions, chosen to help prevent overcooking, the most common problem in getting used to this oven.
- Variations in the size, shape, weight and dimensions of the food require longer cooking time.
- Use your own judgment along with the cooking guide suggestions to test food conditions, just as you would do with a conventional cooker.

Before Calling for Service

If following symptoms appear while using the microwave oven, check it one more time. It may not be a failure.

Operation

Symptoms	Possible Cause & Solution
Microwave oven does not start	**Power cord is unplugged, door is open. Or, cooking time is not set.** • Plug in power cord. • Close oven door. • Set cooking time.
	A fuse in your home may be blown or the circuit breaker tripped. Or the appliance is connected to a GFCI (Ground Fault Circuit Interrupter) outlet, and the outlet's circuit breaker has tripped. • Check the main electrical box and replace the fuse or reset the circuit breaker. Do not increase fuse capacity. If the problem is a circuit overload, have it corrected by a qualified electrician. • Reset the circuit breaker on the GFCI. If the problem persists, contact an electrician.
Arcing or Sparking	**Utensils is not microwave safe. Or, operated the oven when it is empty.** • Use microwave-safe utensils. When in doubt, test utensils before use. • Do not operate oven while it is empty.
Incorrect Time of Day	**Power is interruption.** • Reset the time. See Setting the Clock section to reset time of day.
Unevenly Cooked Foods	**Utensils is not microwave safe. Or, cooking settings was wrong.** • Test utensils to make sure it is microwave safe. • Do not cook without the glass tray. • Turn or stir food while cooking. • Defrost food completely before cooking. • Use correct cook time and power level.
Overcooked Foods	**Cooking settings and methods are wrong.** • Change cook time or power level.
Undercooked Foods	**Utensils is not microwave safe. Or, cooking settings was wrong.** • Test that utensils is microwave safe. • Defrost food completely before cooking. • Change cook time or power level. • Make sure that ventilation ports are not blocked.

Symptoms	Possible Cause & Solution
Improper Defrosting	**Utensils is not microwave safe. Or, cooking settings was wrong.** • Test that utensils is microwave safe. • Change defrost time or weight. • Turn or stir food during defrost cycle.

Wi-Fi

Symptoms	Possible Cause & Solution
Trouble connecting appliance and smartphone to Wi-Fi network	**The password for the Wi-Fi network was entered incorrectly.** • Delete your home Wi-Fi network and begin the connection process again.
	Mobile data for your smartphone is turned on. • Turn off the **Mobile data** on your smartphone before connecting the appliance.
	The wireless network name (SSID) is set incorrectly. • The wireless network name (SSID) should be a combination of English letters and numbers. (Do not use special characters.)
	The router frequency is not 2.4 GHz. • Only a 2.4 GHz router frequency is supported. Set the wireless router to 2.4 GHz and connect the appliance to the wireless router. To check the router frequency, check with your Internet service provider or the router manufacturer.
	The appliance and the router are too far apart. • If the appliance is too far from the router, the signal may be weak and the connection may not be configured correctly. Move the router closer to the appliance or purchase and install a Wi-Fi repeater.
	During Wi-Fi setup, the app is requesting a password to connect to the product (on certain phones). • Locate the network name which starts with "LG" under Settings > Networks. Note the last part of the network name. - If the network name looks like LGE_Appliance_XX-XX-XX, enter lge12345. - If the network name looks like LGE_Appliance_XXXX, enter XXXX twice as your password. For example, if the network name appears as LGE_Appliance_8b92, then you would enter 8b928b92 as your password. In this instance, the password is case sensitive and the last 4 characters are unique to your appliance.

Memo

Memo

Memo

LG